Agenda **Regular Meeting of the Finance Committee**
January 26, 2026 at 5:00 PM
Council Chambers, City Hall
200 Lincoln Avenue

Procedures for Finance Committee Meeting

Viewing: *If the relevant technology is available to record the meeting in City Hall*, members of the public may stream the meeting live on the City of Santa Fe's YouTube channel. The YouTube live stream can be accessed from most smartphones, tablets, or computers.

The video recording*, if created,* of this and all past meetings of the Governing Body will also remain available for viewing at any time on the City's YouTube channel. Staff is available to help members of the public access pre-recorded Governing Body meetings online at any time during normal business hours. Please call 955-6521 for assistance.

1. Call to Order
2. Roll Call
3. Approval of Agenda
4. Approval of Consent Agenda
5. Presentations
   a. Opening Remarks from Finance Committee Chair, Councilor Faulkner.
6. Action Items: Consent Agenda
   a. Request for Approval of the December 08, 2025, Finance Committee Meeting Minutes. (Erminia M. Tapia, Business Operations Manager; emtapia@santafenm.gov)

      Committee Review:
      Finance Committee: 01/26/2026

   b. Request for Approval of Que Linda Beautification Program Grant Agreement with the New Mexico Department of Transportation to Support Litter Control and Beautification Efforts in the Total Amount of $90,000 through June 30, 2026. (Sidney Snyder, Interim Park Ranger Superintendent; sksnyder@santafenm.gov)

1. Request for Approval of a Budget Amendment Resolution (BAR) to Allocate New Mexico Department of Transportation Funding in the Total Amount of $90,000 to FY26 Parks and Open Space Revenue and Operating Budget to Support Litter Control and Beautification Efforts.

Committee Review:
Finance Committee: 01/26/2026
Governing Body: 01/28/2026

c. Request for Approval of Amendment No. 2 to Item #20-0041 with Altura Communication Solutions to Increase the Compensation by $411,166.01 for a New Total Amount of $1,238,766.08, to Extend the Termination Date to December 31, 2027 and, to Amend the Scope of Services to Add Avaya Maintenance and Support Services. (Eric Candelaria, ITT Director; edcandelaria@santafenm.gov)

Committee Review:
Finance Committee: 01/26/2026
Governing Body: 01/28/2026

d. Request for Approval of Amendment No.1 to Linking Agreement Item #25-0454 with UKG Kronos Systems LLC to Increase the Compensation by $46,114.80, and to Add Telestaff Cloud Storage to the Scope of Services. (Eric Candeleria, ITT Department Director; edcandelaria@santafenm.gov)

Committee Review:
Finance Committee: 01/26/2026
Governing Body: 01/28/2026

e. Request for Approval of a Budget Amendment Resolution (BAR) in the Total Amount of $525,386 from the Available Water Division Cash Balance to Remodel and Replacement for the Remodel of the Carlos Ortega Center. (Christine Chavez, Water Conservation Manager; cychavez@santafenm.gov)

Committee Review:
Public Works and Utilities Committee: 01/20/2026
Finance Committee: 01/26/2026
Governing Body: 01/28/2026

f. Request for Approval of General Services Contract with Brenntag Pacific, Inc. for the Purchase of a Chemical Aid to Enhance Settleability of Mixed Liquor Suspended Solids and Increase Phosphorus Removal within the Activated Sludge Wastewater Treatment Process in the Total Amount of $4,000,000 for a Four Year Term. (Efren Morales, WWM Plant Manager; emmorralles@santafenm.gov)

1. Request for Approval of a Budget Amendment Resolution (BAR) in the Total Amount of $1,000,000 from the Wastewater Enterprise Fund to Operating Supplies.

Committee Review:
Public Works and Utilities Committee: 01/20/2026
Finance Committee: 01/26/2026
Governing Body: 01/28/2026

g. Request for Approval to Reauthorize the $1,000,000 Budgeted in FY 2023-24 to Facilities WIP Construction for Security Camera Replacement to Allocate the Unspent Balance of $426,831 to City Hall Security Improvements. (Tim Farrell, Interim Facilities Division Director; tgfarrell@santafenm.gov)

Committee Review:
Public Works and Utilities Committee: 01/20/2026
Finance Committee: 01/26/2026
Governing Body: 01/28/2026

h. Request for Approval of an On-Call Price Agreement with HEI Inc. in the Total Amount of $10,000,000 Including NMGRT for Construction Services for a Two-Year Term. (Sebastian Gallegos, Project Manager; sfgallegos@santafenm.gov)

Committee Review:
Public Works and Utilities Committee: 01/20/2026
Finance Committee: 01/26/2026
Governing Body: 01/28/2026

i. Request for Approval of Amendment No. 1 to General Services Contract Item #24-0487 with Systems Design West, LLC to Increase the Fixed Price for Each Deliverable Item to $23.50 Per Transport for a Total Amount of $300,000 Including NMGRT for Year One, for Ambulance Service Billing. (Scott Ouderkirk, Interim Fire Chief; slouderkirk@santafenm.gov)

Committee Review:
Public Safety Committee: 01/20/2026
Public Works and Utilities Committee: 01/20/2026
Finance Committee: 01/26/2026
Governing Body: 01/28/2026

j. Request for Approval of a Budget Amendment Resolution (BAR) in the Total Amount of $158,624 to Professional Contracts from Reimbursements/Refunds Pursuant to the Terms of the Memorandum of Agreement between New Mexico Health Care Authority to Pay Public Consulting Group a 14% Contingency Fee. (Scott Ouderkirk, Interim Fire Chief; slouderkirk@santafenm.gov)

Committee Review:

Public Works and Utilities Committee: 01/20/2026
Finance Committee: 01/26/2026
Governing Body: 01/28/2026

k. Request for Approval to Purchase a Ferrara HD77 Ladder/Quint and Equipment from 411 Equipment, LLC in the Total Amount of $1,670,000. (Scott Ouderkirk, Interim Fire Chief, Fire Department; slouderkirk@santafenm.gov)

Committee Review:
Public Works and Utilities Committee: 01/20/2026
Public Safety Committee: 01/20/2026
Finance Committee: 01/26/2026
Governing Body: 01/28/2026

l. Request for Approval to Purchase a 2025 Ferrara Custom Cinder Fire Engine/Pumper from 411 Equipment, LLC in the Total Amount of $980,043 (Scott Ouderkirk, Interim Fire Chief, Fire Department; slouderkirk@santafenm.gov)

Committee Review:
Public Works and Utilities Committee: 01/20/2026
Public Safety Committee: 01/20/2026
Finance Committee: 01/26/2026
Governing Body: 01/28/2026

m. Request for Approval of a Memorandum of Agreement with New Mexico Health Care Authority to Facilitate an Inter-Governmental Transfer of Funds for the Purpose of Participation in the NM Ambulance Supplemental Payment Program in the Total Amount of $1,122,045.55. (Scott Ouderkirk, Interim Fire Chief; slouderkirk@santafenm.gov)

1. Request for Approval of Budget Amendment Resolution (BAR) to Allocate $1,122,046 from Grant Proceeds Awarded to the Fire Department from the New Mexico Department of Finance and Administration.

Committee Review:
Public Works and Utilities Committee: 01/20/2026
Public Safety Committee: 01/20/2026
Finance Committee: 01/26/2026
Governing Body: 01/28/2026

n. Request for Approval of an On-Call Price Agreement with Enviroworks LLC in the Total Amount of $10,000,000 Including NMGRT for City-Wide Miscellaneous Construction Services for a Term of 10 Years. (Caryn Grosse, Public Works Project Manager III, clgrosse@santafenm.gov)

Committee Review:
Public Works and Utilities Committee: 01/20/2026
Finance Committee: 01/26/2026
Governing Body: 01/28/2026

o. Request for Approval of an On-Call Price Agreement with LLR Construction LLC in the Total Amount of $10,000,000 Including NMGRT for City-Wide Miscellaneous Construction Services for a Term of 10 Years. (Caryn Grosse, Public Works Project Manager III; clgrosse@santafenm.gov)

Committee Review:
Public Works and Utilities Committee: 01/20/2026
Finance Committee: 01/26/2026
Governing Body: 01/28/2026

p. Request for Approval of an On-Call Price Agreement with Unified Contractor, Inc. in the Total Amount of $10,000,000 Including NMGRT for City-Wide Miscellaneous Construction Services for a Term of 10 Years. (Caryn Grosse, Public Works Project Manager III; clgrosse@santafenm.gov)

Committee Review:
Public Works and Utilities Committee: 01/20/2026
Finance Committee: 01/26/2026
Governing Body: 01/28/2026

q. Request for Approval of Capital Appropriation Grant Agreement with New Mexico Department of Finance and Administration for Project 25-J4371 Improvements to the South Side Teen Center in the Total Amount of $1,764,580 with a Reversion Date of June 30, 2027. (Jake Martinez, Public Works Project Manager II; jemartinez@santafenm.gov)

Committee Review:
Public Works and Utilities Committee: 01/20/2026
Finance Committee: 01/26/2026
Governing Body: 01/28/2026

r. Request for Approval of an On-Call Price Agreement with Davenport Construction Management LLC in the Total Amount of $10,000,000 Including NMGRT for City-Wide Miscellaneous Construction Services for a Term of 10 Years. (Caryn Grosse, Public Works Project Manager III; clgrosse@santafenm.gov)

Committee Review:
Public Works and Utilities Committee: 01/20/2026
Finance Committee: 01/26/2026

Governing Body: 01/28/2026

s. Request for Approval of an On-Call Price Agreement with B&D Industries Inc. in the Total Amount of $10,000,000 Including NMGRT for City-Wide Miscellaneous Construction Services for a Term of 10 Years. (Caryn Grosse, Public Works Project Manager III; clgrosse@santafenm.gov)

Committee Review:
Public Works and Utilities Committee: 01/20/2026
Finance Committee: 01/26/2026
Governing Body: 01/28/2026

t. Request for Approval of an On-Call Price Agreement with AnchorBuilt Inc. in the Total Amount of $10,000,000 Including NMGRT for City-Wide Miscellaneous Construction Services for a Term of 10 Years. (Caryn Grosse, Public Works Project Manager III; clgrosse@santafenm.gov)

Committee Review:
Public Works and Utilities Committee: 01/20/2026
Finance Committee: 01/26/2026
Governing Body: 01/28/2026

u. Request for Approval of an On-Call Price Agreement with JDR & Associates in the Total Amount of $10,000,000 Including NMGRT for City-Wide Miscellaneous Construction Services for a Term of 10 Years. (Caryn Grosse, Public Works Project Manager III; clgrosse@santafenm.gov)

Committee Review:
Public Works and Utilities Committee: 01/20/2026
Finance Committee: 01/26/2026
Governing Body: 01/28/2026

v. Request for Approval of a General Services Contract with US Electrical Corp. in the Total Amount of $540,938 Including NMGRT for City-Wide Elevator Services with a Two-Year Term. (Caryn Grosse, Public Works Project Manager III, clgrosse@santafenm.gov)

Committee Review:
Public Works and Utilities Committee: 01/20/2026
Finance Committee: 01/26/2026
Governing Body: 01/28/2026

w. Request for Approval of Amendment No. 1 to Professional Services Agreement Item #24-0483 with Wilson & Company, Inc. Engineers & Architects to Increase the Compensation by $5,000,000 for a New Total Amount of $10,000,000 Excluding NMGRT for On-Call General Engineering

Services and Construction Management Services for the Design and Construction of Roadway, Trail, Drainage, Facility, Utility and Traffic Design. (Romella Glorioso-Moss, Capital Project Manager; rsglorioso-moss@santafenm.gov)

Committee Review:
Public Works and Utilities Committee: 01/20/2026
Finance Committee: 01/26/2026
Governing Body: 01/28/2026

x. Request for Approval of Amendment No. 1 to Item #25-0425 with Bradbury Stamm Construction to Decrease Compensation by $287,205.18 to Correct the GRT Percentage for a Total New Total Amount of $23,386,708.13 Including NMGRT for Canyon Road Water Treatment Plant Flocculation and Sedimentation Improvements. (Clinton Peterson, Engineer; cdpeterson@santafenm.gov)

Committee Review:
Public Works and Utilities Committee: 01/20/2026
Finance Committee: 01/26/2026
Governing Body: 01/28/2026

y. Request for Approval of a Budget Amendment Resolution (BAR) to Re-Appropriate $137,416 of the Unspent FY25 One-Time Appropriation from the General Fund Balance to FY26 Public Works Administration Professional Contracts for Capital Program Management. (Sam Burnett, Interim Public Works Director; jsburnett@santafenm.gov)

Committee Review:
Public Works and Utilities Committee: 01/20/2026
Finance Committee: 01/26/2026
Governing Body: 01/28/2026

z. Request for Approval of Amendment No. 1 to Construction Contract Item #25-0371 with Advanced Environmental Solutions, Inc. for Siler Complex Fuel Station Remediation to Extend the Term to March 31, 2026. (Marlisa Wilson, Public Works Project Manager; mbwilson@santafenm.gov)

Committee Review
Public Works and Utilities Committee: 01/20/2026
Finance Committee: 01/26/2026
Governing Body: 01/28/2026

aa. Request for Approval of Capital Appropriation Agreement with New Mexico Department of Transportation in the Total Amount of $300,000 for Project C5223169, Improvements to Governor Miles Road from Richards Avenue to

Nizhoni Drive with a Reversion Date of June 30, 2026. (Romella Glorioso-Moss, Complete Streets Capital Projects Manager, rsglorioso-moss@santafenm.gov)

1. Request for Approval of a Budget Amendment Resolution (BAR) to Allocate $300,000 from the 2022 Capital Appropriation to FY26 Revenue and WIP Design.

Committee Review:
Public Works and Utilities Committee 01/20/2026
Finance Committee 01/26/2026
Governing Body 01/28/2026

bb. Request for Approval of Amendment No. 6 to Item # 18-0758 with Paymentus Corporation to Increase the Compensation by $153,000 for a New Total Contract Amount of $377,000, and Extend the Term through March 23, 2027, for Merchant Service Monthly Subscription Fee and Monthly Charge Fees for Returned Payments and Customer Disputes. (Nancy Jimenez, Utility Billing and Administration Division Director; nljimenez@santafenm.gov)

Committee Review:
Public Works and Utilities Committee: 01/20/2026
Finance Committee: 01/26/2026
Governing Body: 01/28/2026

cc. Request for Approval of Amendment No. 1 to Item #24-0643 with Aquasight, LLC to Amend the Scope of Work and Increase the Compensation by $28,656.25 for a New Total Contract Amount of $378,656.25 to Account for Gross Receipt Tax for Software Services for the Paseo Real Wastewater Reclamation Facility. (Michael Dozier, WW Division Director; mldozier@santafenm.gov)

Committee Review:
Public Works and Utilities Committee: 01/20/2026
Finance Committee: 01/26/2026
Governing Body: 01/28/2026

dd. Request for Approval of Capital Outlay Grant Agreement with New Mexico Environment Department for the Improvement of the Paseo Real Wastewater Treatment Facility Project SAP 25-J2459-GF in the Total Amount of $100,000 With a Reversion Date of June 30, 2029. (Jesse Roach, Interim Public Utilities Department Director; jdroach@santafenm.gov)

1. Request for Approval of a Budget Amendment Resolution (BAR) to Allocate $99,000 from the 2025 Capital Appropriation to FY26 Revenue and WIP Design for the Improvement of the Paseo Real Wastewater Treatment Facility.

Committee Review:
Public Works and Utilities Committee 01/20/2026
Finance Committee 01/26/2026
Governing Body 01/28/2026

ee. Request for Approval of Amendment No. 1 to a Memorandum of Agreement with the New Mexico Department of Transportation (NMDOT) for Public Transportation Operating Assistance in the Total Amount of $20,000 with a Reversion Date of March 31, 2027. (Gabrielle Chavez, Transit Director of Administration; gnchavez@santafenm.gov)

1. Request for Approval of a Budget Amendment Resolution (BAR) in the Total Amount of $40,000 to FY26 Transit Grant Revenue and Professional Contracts.

Committee Review:
Public Works and Utilities Committee: 01/20/2026
Finance Committee: 01/26/2026
Governing Body: 01/28/2026

ff. Request for Approval of a Grant Agreement with the New Mexico Department of Transportation to Fund the End Driving While Impaired Project, Buckle Up, Click it or Ticket Project, Distracted Driving Project, and Selective Traffic Enforcement Program, Summer Enforcement Period Project in the Total Amount of $87,349 through September 30, 2026. (John Garcia, Police Sergeant: jmgarcia@santafenm.gov)

1. Request for Approval of a Budget Amendment Resolution (BAR) in the Total Amount of $87,349 from the New Mexico Department of Transportation Fund – State Grants to the Police Overtime Fund.

Committee Review:
Quality of Life Committee: 01/21/2026
Finance Committee: 01/27/2026
Governing Body Committee: 01/28/2026

gg. Request for Approval of a Capital Outlay Grant Agreement for Capital Appropriation Project A22-G5353 with the New Mexico Aging and Long-Term Services Department for the Purchase and Installation of Meals Equipment and Other Equipment for the Mary Esther Gonzales Senior Center in the Total Amount of $235,630 through June 30, 2026. (Manuel Sanchez, Interim Community Services Director; mnsanchez@santafenm.gov)

Committee Review:
Quality of Life Committee: 01/21/2026
Finance Committee: 01/26/2026
Governing Body Committee: 01/28/2026

hh. Request for Approval of Capital Outlay Grant Agreement for Capital Appropriation Project A22-G5354 with New Mexico Aging and Long-Term Services Department for the Purchase and Installation of Meals Equipment and Other Equipment for the Pasatiempo

Senior Center in the Total Amount of $65,805 through June 30, 2026. (Manuel Sanchez, Senior Services Director; mnsanchez@santafenm.gov)

Committee Review:
Quality of Life Committee: 01/21/2026
Finance Committee: 01/26/2026
Governing Body Committee: 01/28/2026

ii. Request for Approval of Amendment No. 3 to Item #25-0011 with the Santa Fe Animal Shelter and Humane Society, Inc. to Increase the Compensation by $136,800 for a New Total Contract Amount of $567,089 and Extend the Term for an Additional Three Months for Animal Boarding and Care Services. (Ben Valdez, Deputy Chief of Police; bpvaldez@santafennm.gov)

Committee Review:
Quality of Life Committee: 01/21/2026
Finance Committee: 01/26/2026
Governing Body: 01/28/2026

jj. Request for Approval of Capital Outlay Grant Agreement with New Mexico Department of Finance and Administration for Project 25-J3157 in the Total Amount of $710,000 for Permanent and Transitional Housing to End Homelessness with a Reversion Date of June 30, 2029. (Lia Salaverry, Youth & Families Services Division Director; lasalaverry@santafenm.gov)

1. Request for Approval of a Budget Amendment Resolution (BAR) to Allocate $702,900 from the 2025 Capital Appropriation to FY26 Revenue and WIP Construction for Permanent and Transitional Housing.

Committee Review:
Quality of Life Committee: 01/21/2026
Finance Committee: 01/26/2026
Governing Body: 01/28/2026

kk. CONSIDERATION OF RESOLUTION NO. 2026-___. (Mayor Alan Webber and Councilor Jamie Cassutt)
A Resolution Adopting Annual Open Meetings Act Notice Standards For 2026. (Geralyn Cardenas, Interim City Clerk; gfcardenas@santafenm.gov)

Committee Review:
Governing Body (Introduced): 12/10/2025
Public Works and Utilities Committee: 01/20/2026
Quality of Life Committee: 01/21/2026
Finance Committee: 01/26/2026
Governing Body: 01/28/2026

ll. CONSIDERATION OF BILL NO. 2025-23. ADOPTION OF ORDINANCE NO. 2026-____.(Councilor Jamie Cassutt and Councilor Pilar Faulkner)
A Bill Amending SFCC 1987, Section 2-4.2, to Require City Managers to Be International City Manager Association ("ICMA") – Credentialed or Credential-

Eligible Unless an Appointment and Consent of Such a Candidate Is Not Possible After Five Months; Requiring Candidates for Deputy City Manager to Have the Same Qualifications Pursuant to Section 2-4.6(L); Removing Portions of Section 2-4.3 That Conflict With City Charter; and Removing the Prohibition for an Acting City Manager to Employ and Discharge Personnel. (Marci Eannarino, Legislation and Policy Innovation Manager; maeannario@santafenm.gov, Christine Spiers, Legislative Assistant; cmspiers@santafenm.gov, Palmer Anderson, Policy Analyst; pcanderson@santafenm.gov)

Committee Review:
Governing Body (Introduced): 12/10/2025
Governing Body (Public Comment): 01/15/2026
Public Works and Utilities Committee: 01/20/2026
Quality of Life Committee: 01/21/2026
Finance Committee: 01/26/2026
Governing Body: 02/11/2026

mm. CONSIDERATION OF RESOLUTION NO. 2026-____. (Councilor Amanda Chavez and Councilor Jamie Cassutt)
A Resolution Directing the City Manager to Obtain an Updated Appraisal and Negotiate a Sales Price for Potential Acquisition of 122.634 Acres of Land Adjacent to the Paseo Real Water Reclamation Facility. (Jesse Roach, Interim Public Utilities Director; jdroach@santafenm.gov)

Committee Review:
Governing Body (Introduced): 01/15/2026
Public Works and Utilities Committee: 01/20/2026
Finance Committee: 01/26/2026
Governing Body: 01/28/2026

7. Action Items: Discussion Agenda

8. Public Hearing

   a. Request for Issuance of a Cease-and-Desist Order to Close Korea Spa, 2008 Rosina, Unit B, ZCK, LLC, Zaiqin Wei and Yun Chin, Owners, (505-490-8339) Code Enforcement Case# 2025-005022, Violation of SFCC 18-1.7 Notice of Violation; Penalty, Operating in a Manner Contrary to the Public Welfare. (Maggie Moore, Assistant Land Use Director; mrmoore@santafenm.gov)

9. Matters from Staff

10. Matters from the Committee

11. Matters from the Chair

12. Next Meeting: Monday, February 09, 2026

13. Adjourn

Persons with disabilities in need of accommodations, contact the City Clerk's office at 955-6521, five (5) working days prior to meeting date.

Regular Meeting of the Finance Committee
December 8, 2025 at 5:00 PM
Council Chambers, City Hall
200 Lincoln Avenue
MINUTES

---

1. Call to Order

The Regular Meeting of the Finance Committee was called to order by Councilor Romero-Wirth at 5:01 PM, on Monday, December 8, 2025, in the Council Chambers, CIty Hall, 200 Lincoln Avenue, Santa Fe, New Mexico.

2. Roll Call

MEMBERS PRESENT
Councilor Carol Romero-Wirth
Councilor Signe Lindell
Councilor Jamie Cassutt
Councilor Pilar Faulkner
Councilor Lee Garcia

MEMBERS EXCUSED

OTHER PARTICIPANTS ATTENDING
Emily Oster, Director, Finance Department
Erminia Tapia, Business Operations Manager, Finance Department

3. Approval of Agenda

MOTION A motion was made by Councilor Lindell, seconded by Councilor Cassutt, to Approve.

VOTE The motion Passed on a roll call vote.

4. Approval of Consent Agenda

MOTION A motion was made by Councilor Lindell, seconded by Councilor Cassutt, to Amend.

VOTE The motion Passed on a roll call vote.

The following items were pulled for discussion:

- Item 6d
- Item 6m
- Item 6p
- Item 6hh

5. Presentations

   a. Finance Department Staff Recognition. (Emily K. Oster, Finance Director; ekoster@santafenm.gov)

   b. Recognition of Departing 2025 Finance Committee Members. (Emily K. Oster, Finance Director; ekoster@santafenm.gov)

   c. Proposed Goals, Objectives and Key Perfomance Indicators for FY26. (Andrea Phillips, Deputy City Manager; akphillips@santafenm.gov; Rod Gould, Senior Advisor; rsgould@santafenm.gov)

6. Action Items: Consent Agenda

   a. Request for Approval of the November 10, 2025, Finance Committee Meeting Minutes. (Emily K. Oster, Finance Director; ekoster@santafenm.gov)

      Committee Review:
      Finance Committee: 12/08/2025

Approved on Consent.

   b. Request for Approval of a General Services Contract with WEX Bank dba Wright Express in the Total Amount of $9,600,000 Including Applicable Taxes for WEX Fuel Card Program. (Raymond Scott Gunter, Procurement Manager: rsgunter@santafenm.gov)

      Committee Review:
      Finance Committee: 12/08/2025
      Governing Body: 12/10/2025

Approved on Consent.

   c. Request for Approval of Citywide Price Agreement with Cintas Corporation in the Total Amount of $2,163,750 for Workplace Solutions for a Term of 8 Years. (Travis Dutton-Leyda, Chief Procurement Officer; tkduttonleyda@santafenm.gov and Emily K. Oster, Finance Director; ekoster@santafenm.gov)

      Committee Review:
      Finance Committee: 12/08/2025
      Governing Body: 12/10/2025

Approved on Consent.

   d. Request for Approval of a Budget Amendment Resolution (BAR) to Allocate $3,070,059 from Prior Year FY2025 General Fund Balances to Establish Budget Authority for Transfers to the Affordable Housing Trust Fund Discussed in Prior Years Budget Narrative. (Emily K. Oster, Finance Director; ekoster@santafenm.gov)

Committee Review:
Finance Committee: 12/08/2025
Governing Body: 12/10/2025

MOTION A motion was made by Councilor Cassutt, seconded by Councilor Faulkner, to Approve.

VOTE The motion Passed on a roll call vote.

e. Request for Approval of Amendment No. 2 to Item #24-0540 with Safeware, Inc. to Increase the Total Compensation to $10,000,000 Including NMGRT and to Extend the Term to March 28, 2029, for Public Safety Preparedness and Safety Equipment & Solutions. (Travis Dutton-Leyda, Chief Procurement Officer; tkduttonleyda@santafenm.gov and Emily K. Oster, Finance Director; ekoster@santafenm.gov)

Committee Review:
Finance Committee: 12/08/2025
Governing Body: 12/10/2025

Approved on Consent.

f. Request for Approval of Amendment No. 4 to Memorandum of Understanding Item #18-1309 with Insight Public Sector to Increase the Compensation by $4,090,461.67 for a New Total Amount of $8,018,466.37 and to Extend the Termination Date to November 26, 2028, for City Microsoft 365 Products and Services. (Larry Worstell, ISD Manager; lfworstell@santafenm.gov)

Committee Review:
Finance Committee:12/08/2025
Governing Body:12/10/2025

Approved on Consent.

g. Request for Approval of an Exclusive Negotiation Agreement to Negotiate the Sale of Midtown Tract H-1a to Integral Design and Development LLC. for Development as a Mixed-Use Development, with a Deposit of $10,000. (Carly Venditti, Asset Development Manager; cavenditti@santafenm.gov)

Committee Review:
Finance Committee: 12/08/2025
Governing Body: 12/10/2025

Approved on Consent.

h. Request for Approval of an Exclusive Negotiation Agreement to Negotiate the Sale of Midtown Tracts J-1a and J-1b to Santa Fe Innovation Hub LLC. for Development as a Mixed-Use Development, with a Deposit of $18,125. (Carly Venditti, Asset Development Manager; cavenditti@santafenm.gov)

Committee Review:

Finance Committee: 12/08/2025
Governing Body: 12/10/2025

Approved on Consent.

i. Request for Approval of Amendment No. 1 to Item #25-0278 with Arthur J. Gallagher to Increase the Compensation by $174,020 for a New Total Contract Amount of $4,133,989.08 for Additional Insurance Premiums for FY25-26. (Andrea Phillips, Deputy City Manager; akphillips@santafenm.gov)

Committee Review:
Finance Committee: 12/08/2025
Governing Body: 12/10/2025

Approved on Consent.

j. Request for Approval of Capital Outlay Grant Agreement with New Mexico Department of Transportation for Project C5253296 Rufina Lopez Lane Intersection Improvements in the Total Amount of $400,000 with the Reversion Date of June 30, 2029. (Romella Glorioso-Moss, Complete Streets Capital Projects Manager; rsglorioso-moss@santafenm.gov)

1. Request for Approval of a Budget Amendment Resolution (BAR) to Allocate $400,000 from the 2025 Capital Appropriation to FY26 Revenue and WIP Design for Improvements to the Rufina Lopez Lane Intersection.

Committee Review:
Finance Committee: 12/08/2025
Governing Body: 12/10/2025

Approved on Consent.

k. Request for Approval of a Memorandum of Agreement (MOA) with New Mexico Department of Transportation (NMDOT) for Public Transportation Service Funding in the Amount of $807,315.10. (Gabrielle Chavez, Transit Director of Administration; gnchavez@santafenm.gov)

1. Request for Approval of a Budget Amendment Resolution (BAR) in the Total Amount of $1,009,146 to Budget Proceeds from the MOA with NMDOT in the Amount of $807,315 with Local Match of $201,830 from Transit Fund Balance.

2. Request Authorization of the Chief Procurement Officer to Issue a Purchase Order to Purchase Six Paratransit E-Transit Buses for an Amount of $400,287.

Committee Review:
Finance Committee: 12/08/2025
Governing Body: 12/10/2025

Approved on Consent.

l. Request for Approval of Amendment No. 1 to Item #25-0456 with SKE Contractors, L.L.C. to Increase the Compensation by $600,000 for a New Total Contract Amount of $4,927,500 for Sewer Collection System Repair, Replacement, and Extension. (Fred Heerbrandt, Engineer Supervisor; pfheerbrandt@santafenm.gov)

1. Request for Approval of a Budget Amendment Resolution (BAR) in the Total Amount of $600,000 from the Wastewater Enterprise Fund to WIP Construction.

Committee Review:
Public Works and Utilities Committee: 12/01/2025
Finance Committee: 12/08/2025
Governing Body: 12/10/2025

Approved on Consent.

m. Request for Approval of Amendment No. 1 to General Services Contract Item #23-0062 with IPS Group Inc. to Amend the Scope of Services to Provide Ongoing Support for Credit Card Payments Made by Customers on SingleSpace and Monthly Management System Fees for Single Space Parking Meters, Increase the Compensation by $543,600 for a New Total Amount of $1,346,607.14 Including NMGRT and to Extend the Term to November 21, 2029.(Steve Kaspan, Parking Division Director; spkaspan@santafenm.gov)

Committee Review:
Public Works and Utilities Committee: 12/01/2025
Finance Committee: 12/08/2025
Governing Body: 12/10/2025

MOTION A motion was made by Councilor Lindell, seconded by Councilor Cassutt, to Approve.

VOTE The motion Passed on a roll call vote.

n. Request for Approval of Amendment No. 1 to Item # 24-0351 with Western Oilfields Supply Co. to Increase the Compensation by $2,909,100.12 for a New Total Contract Amount of $3,909,100.12 for the Removal, Purchase and Installation of Pumps and Filtration Equipment for the Paseo Real Wastewater Treatment Facility. (Michael Dozier, WW Division Director; mldozier@santafenm.gov)

1. Request for Approval of a Budget Amendment Resolution (BAR) in the Total Amount of $2,909,101 from the Wastewater Enterprise Fund to WIP Construction.

Committee Review:
Public Works and Utilities Committee: 12/01/2025

Finance Committee: 12/08/2025
Governing Body: 12/10/2025

Approved on Consent.

o. Request for Approval of a Budget Amendment Resolution (BAR) in the Total Amount of $500,000 from the Wastewater Enterprise Fund to WIP Construction to Fund an Existing Contract with McDowell Mechanical for On-Call General/Mechanical Construction Services. (Fred Heerbrandt, Engineer Supervisor; pfheerbrandt@santafenm.gov)

Committee Review:
Public Works and Utilities Committee: 12/01/2025
Finance Committee: 12/08/2025
Governing Body: 12/10/2025

Approved on Consent.

p. Request for Approval to Obtain Construction Services with National Roofing Company for Maintenance and Repair of a 64-Year-Old Roof in the Total Amount of $330,722. (Leroy Alvarado, Operations Management Supervisor; lmalvarado@santafenm.gov)

Committee Review:
Public Works and Utilities Committee: 12/01/2025
Finance Committee: 12/08/2025
Governing Body: 12/10/2025

MOTION A motion was made by Councilor Garcia, seconded by Councilor Faulkner, to Approve.

VOTE The motion Passed on a roll call vote.

q. Request for Approval of a Public Fireworks Display Permit Submitted by the Kiwanis Club of Santa Fe for the New Year's Eve Celebration on Wednesday, December 31, 2025, at the La Fonda Plaza Hotel. (Geronimo Griego, Fire Marshal; gggriego@santafenm.gov)

Committee Review:
Public Works and Utilities Committee: 12/01/2025
Finance Committee: 12/08/2025
Governing Body: 12/10/2025

Approved on Consent.

r. Request for Approval of a Budget Amendment Resolution (BAR) in the Total Amount of $2,005,000 from the Water Cash Enterprise Fund to Water WIP Design for On-Call Engineering Services for Carollo Engineers Inc. (John Del Mar, Engineer; jpdelmar@santafenm.gov)

Committee Review:
Public Works and Utilities Committee: 12/01/2025
Finance Committee: 12/08/2025
Governing Body: 12/10/2025

Approved on Consent.

s. Request for Approval of a Budget Amendment Resolution (BAR) in the Total Amount of $1,060,000 from the Water Enterprise Cash Fund to Water WIP Design for On-Call Engineering Services for Hazen and Sawyer. (John Del Mar, Engineer Supervisor; jpdelmar@santafenm.gov)

Committee Review:
Public Works and Utilities Committee: 12/01/2025
Finance Committee: 12/08/2025
Governing Body: 12/10/2025

Approved on Consent.

t. Request for Approval of a Budget Amendment Resolution (BAR) in the Total Amount of $1,480,000 from the Water Enterprise Cash Fund to Water WIP Design for On-Call Engineering Services for AECOM Technical Services. (John Del Mar, Engineer Supervisor; jpdelmar@santafenm.gov)

Committee Review:
Public Works and Utilities Committee: 12/01/2025
Finance Committee: 12/08/2025
Governing Body: 12/10/2025

Approved on Consent.

u. Request for Approval of Capital Appropriation Grant Agreement with New Mexico Department of Finance and Administration for Project 25-J4367 Improvements to Fire Station Facilities in the Total Amount of $3,955,050 with a Reversion Date of June 30, 2027. (Tim Farrell, Interim Facilities Division Director; tgfarrell@santafenm.gov)

1. Request for Approval of a Budget Amendment Resolution (BAR) to Allocate $3,955,050 to FY26 Revenue and Facilities WIP Construction for Improvements to Fire Station Facilities.

Committee Review:
Public Works and Utilities Committee: 12/01/2025
Finance Committee: 12/08/2025
Governing Body: 12/10/2025

Approved on Consent.

v. Request for Approval to Purchase a Metro Express 157, Type III Ambulance from Southwest Ambulance Sales in the Total Amount of $219,001. (Brian

Moya, Fire Department, Fire Chief; bjmoya@santafenm.gov)

Committee Review:
Public Works and Utilities Committee: 12/01/2025
Finance Committee: 12/08/2025
Governing Body: 12/10/2025

Approved on Consent.

w. Request for Approval to Accept the Fire Protection Fund Grant from the New Mexico Department of Homeland Security and Emergency Management (DHSEM) In the Total Amount of $522,980. (Brian Moya, Fire Department, Fire Chief; bjmoya@santafenm.gov)

1. Request for Approval of a Budget Amendment Resolution (BAR) to add $522,980 from the DHSEM into FY26 Operating and Safety Supplies.

Committee Review:
Public Works and Utilities Committee: 12/01/2025
Finance Committee: 12/08/2025
Governing Body: 12/10/2025

Approved on Consent.

x. Request for Approval of General Services Contract with Fire Wire, LLC for Fire Department Personal Protective Equipment Inspection, Repair and Cleaning Services in the Total Amount of $330,000 Including NMGRT for a Six-Year Term. (Brian Moya, Fire Chief; bjmoya@santafenm.gov and Graham Miller, Battalion Chief-Health and Safety; grmiller@santafenm.gov)

Committee Review:
Public Works and Utilities Committee: 12/01/2025
Finance Committee: 12/08/2025
Governing Body: 12/10/2025

Approved on Consent.

y. Request for Approval of Amendment No. 1 to Professional Services Contract Item #25-0376 with Life Extension Clinics, Inc. dba Life Scan Wellness Centers to Increase Compensation by $495,407.95 for a New Total Amount of $645,771.20 for Firefighter Physicals. (Brian Moya, Fire Department, Fire Chief; bjmoya@santafenm.gov)

Comittee Review:
Public Works and Utilities Committee: 12/01/2025
Finance Committee: 12/08/2025
Governing Body: 12/10/2025

Approved on Consent.

z. Request for Approval of a Professional Services Agreement with Woven

Architecture LLC in the Total Amount of $231,300 Including NMGRT for Design Services for the Santa Fe Main Library for a Two-Year Term. (Jane Mathews, Public Works Project Manager II; sjmathews@santafenm.gov)

1. Request for Approval of a Budget Amendment Resolution (BAR) to Allocate $231,300 to FY26 Facilities WIP Design for Santa Fe Main Library Preservation Project.

Committee Review:
Public Works and Utilities Committee: 12/01/2025
Finance Committee: 12/08/2025
Governing Body: 12/10/2025

Approved on Consent.

aa. Request for Approval of Capital Appropriation Agreement with New Mexico Department of Finance and Administration in the Total Amount of $119,607 for Project 25-J4368 Improvements to the City Facility Leased to Kitchen Angels with a Reversion Date of June 30, 2027. (Caryn Grosse, PMP, Public Works Project Manager III; clgrosse@santafenm.gov)

Committee Review:
Public Works and Utilities Committee: 12/01/2025
Finance Committee: 12/08/2025
Governing Body: 12/10/2025

Approved on Consent.

bb. Request for Approval of Capital Appropriation Grant Agreement with New Mexico Department of Finance and Administration for Project 25-J4366 Improvements to Fire Station Facilities in the Total Amount of $247,500 with a Reversion Date of June 30, 2028. (Tim Farrell, Interim Facilities Division Director; tgfarrell@santafenm.gov)

1. Request for Approval of a Budget Amendment Resolution (BAR) to Allocate $247,500 to FY26 Revenue and Facilities WIP Construction for Improvements to Fire Station Facilities.

Committee Review:
Public Works and Utilities Committee: 12/01/2025
Finance Committee: 12/08/2025
Governing Body: 12/10/2025

Approved on Consent.

cc. Request for Approval of Amendment No. 1 to Item # 24-0656 with SKE Contractors, LLC to Increase the Compensation by $113,915.40 for a New Total Contract Amount of $3,388,943.60 for Calle Mejia Sanitary Sewer Pipe Bursting Rehab Project. (Fred Heerbrandt, Engineer Supervisor;

pfheerbrandt@santafenm.gov)

1. Request for Approval of a Budget Amendment Resolution (BAR) in the Total Amount of $113,916 from the Wastewater Enterprise Fund to WIP Construction.

Committee Review:
Public Works and Utilities Committee: 12/01/2025
Finance Committee: 12/08/2025
Governing Body: 12/10/2025

Approved on Consent.

dd. Request for Approval of a General Services Contract with Duke's Root Control, Inc. for Sanitary Sewer Evaluation Services in the Total Amount of $1,463,040.28 for a Four Year Term. (Efren Morales, Operations Superintendent; emmorales@santafenm.gov)

1. Request for Approval of a Budget Amendment Resolution (BAR) in the Total Amount of $1,463,041 from the Wastewater Enterprise Fund to Repair and Maintenance Building/Structure.

Committee Review:
Public Works and Utilities Committee: 12/01/2025
Finance Committee: 12/08/2025
Governing Body: 12/10/2025

Approved on Consent.

ee. Request for Approval to Purchase Two Commercial Front Load Collection Vehicles from Bruckner Truck Sales in the Total Amount of $970,078. (Martin Valdez, ESD Fleet Manager; mjvaldez@santafenm.gov)

Committee Review:
Public Works and Utilities Committee: 12/01/2025
Finance Committee: 12/08/225
Governing Body: 12/10/2025

Approved on Consent.

ff. Request for Approval of a Budget Amendment Resolution (BAR) in the Total Amount of $944,887 to Re-Appropriate the Unused Funds from the Office of Economic Development FY25 Budget into the FY26 Budget to Support the SFPS Work Base Learning Program Contract and the UNM Education and Training Consulting Contract. (Loretta Olguin, Business Operations Manager; lsolguin@santafenm.gov)

Committee Review:
Quality of Life Committee: 12/03/2025

Finance Committee: 12/08/2025
Governing Body: 12/10/2025

Approved on Consent.

gg. Request for Approval of Amendment No.1 to General Plan Update Contract Item #24-0352 with WSP USA Inc. to Increase the Compensation by $150,000 for a New Total Amount of $2,037,871.87 for the Development of an Economic Development Strategic Plan. (Johanna Nelson, Office of Economic Development Director; jcnelson@santafenm.gov and Noah Tamas-Parris, Contracts Administrator; nmtamasparris@santafenm.gov)

Committee Review:
Economic Development Advisory Committee:12/03/2025
Quality of Life Committee: 12/03/2025
Finance Committee: 12/08/2025
Governing Body: 12/10/2025

Approved on Consent.

hh. Request for Approval of Amendment No. 2 to Item #25-0011 with the Santa Fe Animal Shelter and Humane Society, Inc. to Increase the Compensation by $152,289 for a New Total Contract Amount of $430,289 for Animal Shelter Services. (Ben Valdez, Deputy Chief of Police; bpvaldez@santafennm.gov)

Committee Review:
Quality of Life Committee: 12/03/2025
Finance Committee: 12/08/2025
Governing Body: 12/10/2025

MOTION A motion was made by Councilor Lindell, seconded by Councilor Cassutt, to Approve.

VOTE The motion Passed on a roll call vote.

ii. Request for Approval of a Budget Amendment Resolution (BAR) in the Total Amount of $500,000 from Prior Year Gross Receipts Tax Revenue to Service Contracts Fund for the Animal Services Emergency Contract Amendment and RFP Award. (Ben Valdez, Deputy Chief of Police; bpvaldez@santafenm.gov)

Committee Review:
Quality of Life Committee: 12/03/2025
Finance Committee: 12/08/2025
Governing Body: 12/10/2025

Approved on Consent.

jj. Request for Approval of Amendment No. 3 to Item #23-0483 with Vladimir Jones (PRACO LTD.) for Advertising Agency Services to Increase the Compensation by $35,000, Including NMGRT for a New Total Amount of $16,412,000. (Randy Randall, TSF Executive Director; rrandall@santafenm.gov).

Committee Review:
Quality of Life: 12/03/2025
Finance Committee: 12/08/2025
Governing Body: 12/10/2025

Approved on Consent.

kk. Request of Approval of Amendment No. 4 to Item #22-0062 with Mittera to Increase the Compensation by $150,757.12 Including NMGRT for a New Total Amount of $737,584.49 for Printing Services. (Randy Randall, TSF Executive Director; rrandall@sanatafenm.gov)

Committee Review:
Quality of Life Committee: 12/03/2025
Finance Committee: 12/08/2025
Governing Body: 12/10/2025

Approved on Consent.

ll. Request for Approval of Capital Outlay Grant Agreement with the New Mexico Department of Finance and Administration for Capital Appropriation Project 25-14370 to Plan, Design, Construct, Repair, Improve and Equip Parks In the Total Amount of $150,097 with a Reversion Date of June 30, 2027. (Scott Overlie, Project Manager III; saoverlie@santafenm.gov)

1. Request for Approval of a Budget Amendment Resolution (BAR) to Allocate $150,097 Legislative Grant Funds to Parks and Open Space FY26 Revenue and WIP Construction for Parks Improvement Project.

Committee Review:
Public Works and Utilities Committee: 12/01/2025
Finance Committee: 12/08/2025
Governing Body: 12/10/2025

Approved on Consent.

mm. Request for Approval of a Budget Amendment Resolution (BAR) in the Total Amount of $440,000 from the Lodger's Tax Fund Balances to the ART Admin Fund for Community Events, Art in Public Places, and Grants and Services. (Chelsey Johnson, Arts and Culture Director; cxjohnson@santafenm.gov)

Committee Review:
Quality of Life Committee: 12/03/2025
Finance Committee 12/08/2025
Governing Body: 12/10/2025

Approved on Consent.

nn. Request for Approval of a Professional Services Contract with TWG

Development, LLC to Support the Construction of 106 Affordable Housing Units of the Nueva Acequia 4% Santa Fe County LLC in the Total Amount of $935,000 for a One-Year Term. (Faviola Chavez, Director of Office of Affordable Housing, fachavez@santafenm.gov)

Committee Review:
Finance Committee: 12/8/2025
Governing Body: 12/10/2025

Approved on Consent.

oo. Request for Approval of a Professional Services Contract with TWG Development, LLC to Support the Construction of 53 Affordable Housing Units of the Nueva Acequia 9% Santa Fe County LLC in the Total Amount of $565,000 for a One-Year Term. (Faviola Chavez, Director of Office of Affordable Housing, fachavez@santafenm.gov)

Committee Review:
Finance Committee: 12/8/2025
Governing Body: 12/10/2025

Approved on Consent.

pp. Request for Approval of a Professional Services Contract with the Santa Fe Community Housing Trust for the Construction of 8 Permanently Affordable Homes at Arroyo Oeste Phase II for Income-Qualified Families in the Total Amount of $675,000 for a One-Year Term. (Faviola Chavez, Director of Office of Affordable Housing, fachavez@santafenm.gov)

Committee Review:
Finance Committee: 12/08/2025
Governing Body: 12/10/2025

Approved on Consent.

qq. Request for Approval of a Professional Services Agreement with Homewise for the Construction of Spine Infrastructure for 1,500 Owner Occupied Homeownership Units in Phase 3A of Tierra Contenta in Total Amount of $1,500,000 for a One-Year Term. (Faviola Chavez, Director of Office of Affordable Housing, fachavez@santafenm.gov)

Committee Review:
Finance Committee: 12/8/2025
Governing Body: 12/10/2025

Approved on Consent.

rr. CONSIDERATION OF RESOLUTION NO. 2025-____. (Mayor Alan Webber and Councilor Jamie Cassutt)
A Resolution Accepting a Grant from the Que Linda Beautification Program Administered by the New Mexico Department of Transportation; Entering into a Grant Agreement for a

Total Amount of $90,000.00, Term Ending June 30, 2026; Identifying the City Manager or City Manager's Designee as the Signatory for the Agreement. (Sindey Snyder, Park Ranger Supervisor; sksnyder@santafenm.gov)

Committee Review:
Governing Body (Introduced): 11/12/2025
Public Works and Utilities Committee: 12/01/2025
Finance Committee: 12/08/2025
Governing Body: 12/10/2025

Approved on Consent.

ss. CONSIDERATION OF BILL NO. 2025-25. ADOPTION OF ORDINANCE NO. 2025-____. (Councilor Amanda Chavez, Councilor Carol Romero-Wirth, Councilor Jamie Cassutt)
A Bill Updating the Rates and Service Charges for Water Utility Services. (Jesse Roach, Interim Public Utilities Director; jdroach@santafenm.gov)

Committee Review:
Governing Body (Introduced): 10/29/2025
Governing Body (Public Comment): 11/12/2025
Public Works and Utilities Committee: 12/01/2025
Finance Committee: 12/08/2025
Governing Body: 01/14/2025 (PENDING APPROVAL OF MEETING DATES)

Approved on Consent.

tt. CONSIDERATION OF RESOLUTION NO. 2025-____. (Mayor Alan Webber)
A Resolution Approving Budget Amendments for the Buckman Direct Diversion Board and Santa Fe Solid Waste Management Agency and Requesting that New Mexico Department of Finance and Administration Approve the City of Santa Fe's First Quarter Budget Amendments for Fiscal Year 2026. (Andy Hopkins, Budget Officer; ajhopkins@santafenm.gov and Christina Martinez, Senior Budget Analyst; cfmartinez@santafenm.gov)

Committee Review:
Governing Body (Introduced): 11/12/2025
Public Works and Utilities Committee: 12/01/2025
Quality of Life Committee: 12/03/2025
Finance Committee: 12/08/2025
Governing Body: 12/10/2025

Approved on Consent.

uu. CONSIDERATION OF RESOLUTION NO. 2025-____. (Mayor Alan Webber)
A Resolution Establishing the City of Santa Fe's Priorities for Consideration by the New Mexico State Legislature During the 57th Legislature – State of New Mexico – Second Session, 2026. (Marci Eannarino, Legislation and Policy Innovation Manager; maeannario@santafenm.gov and Christine Spiers, Legislative Assistant; cmspiers@santafenm.gov)

Committee Review:
Governing Body (Introduced): 11/12/2025

Public Works and Utilities Committee: 12/01/2025
Quality of Life Committee: 12/03/2025
Finance Committee: 12/08/2025
Governing Body: 12/10/2025

Approved on Consent.

vv. CONSIDERATION OF BILL NO. 2025-22. ADOPTION OF ORDINANCE NO. 2025____.(Councilor Jamie Cassutt, Councilor Signe Lindell, Councilor Alma Castro, and Councilor Pilar Faulkner)
Amending SFCC 1987, Section 5-2, to Define "Abandonment" and "Unattended Animal"; Section 5-5.4 to Prohibit Keeping an Animal on any Median; and Section 5-8.4 to Specify that Abandoning an Animal Will Incur a Fine; Creating a New Section, 5-8.14, "Unattended Animal", Prohibiting Unattended Animals and Imposing a Fine; and Amending Table 15-12.1 to Increase the Fine for Abandoning an Animal from $200 to $500, Impose a $200 Fine for a First Unattended Animal Offense and a $500 Fine for Subsequent Offenses, and Impose a $50 Fine for Keeping Animals on Medians. (Thomas Grundler, Deputy Chief of Police; tjgrundler@santafenm.gov)

Committee Review:
Governing Body (Introduced): 10/8/2025
Governing Body (Public Comment): 10/29/2025
Quality of Life Committee: 11/5/2025 (*POSTPONED AS AMENDED TO 12/03/2025)*
~~Finance Committee: 11/10/2025~~ (*POSTPONED TO 12/08/2025)*
~~Governing Body: 12/10/2025~~ (*POSTPONED TO 01/14/2026)*
Quality of Life Committee: 12/03/2025
Finance Committee: 12/08/2025
Governing Body: 12/10/2026 (*FINAL ACTION, WAIVER OF RULE IV.D)*

Approved on Consent.

7. Action Items: Discussion Agenda

8. Public Hearing

a. Request for Issuance of a Cease-and-Desist Order to Close Korea Spa, 2008 Rosina, Unit B, ZCK, LLC, Zaiqin Wei and Yun Chin, Owners, (505-490-8339) Code Enforcement Case# 2025-005022, Violation of SFCC 18-1.7 Notice of Violation; Penalty, Operating in a Manner Contrary to the Public Welfare. (Maggie Moore, Assistant Land Use Director; mrmoore@santafenm.gov)

MOTION A motion was made by Councilor Cassutt, seconded by Councilor Lindell, to Postpone Item to January 26, 2026, Finance Committee Meeting.

VOTE The motion Passed on a roll call vote.

b. Request for Issuance of a Cease-and-Desist Order to Close Yang Yang Massage/Pony Massage, 1225 S. St. Francis Dr, Unit E, Hong Zhou, Owner/Operator, (505-460-9448). Code Enforcement Case# 2025-005040, Violation of SFCC 18-1.7 Notice of Violation; Penalty, Operating in a Manner Contrary to the Public Welfare. (Maggie Moore, Assistant Land Use Director; mrmoore@santafenm.gov)

MOTION A motion was made by Councilor Cassutt, seconded by Councilor Lindell, to

Approve the Cease-and-Desist Order based on the evidence of advertising and practices of an illicit business.

VOTE The motion Passed on a roll call vote.

9. Matters from Staff
10. Matters from the Committee
11. Matters from the Chair
12. Next Meeting: Monday, January 26, 2026
13. Adjourn

Meeting Adjourned at 7:33 P.M.

_____ _____

Liaison Chair

CITY OF SANTA FE

Date: December 23, 2025

To: Governing Body

From: Sidney Snyder, Park Ranger Superintendent SS

Via: Sam Burnett, Interim Public Works Department Director SB
Melissa McDonald, Parks and Open Space Division Director MMc

ACTION:
Request for Approval of Grant Agreement for the Que Linda Beautification Program with the Department of Transportation in the Total Amount of $90,000 to Support Litter Control and Beautification Efforts. (Sidney Snyder, Interim Park Ranger Superintendent; sksnyder@santafenm.gov)

1. Request Approval of a Budget Adjustment Resolution (BAR) to Allocate New Mexico Department of Transportation (NMDOT) Funding in the Total Amount of $90,000 to FY 2025 Parks and Open Space Revenue and Operating Budget to Support Litter Control and Beautification Efforts.

BACKGROUND AND SUMMARY:
The Que Linda Beautification Program, established under the Clean Highways Act (NMSA 1978, Sections 67-15-1 through 67-15-4), supports litter control and beautification efforts throughout New Mexico. The program enhances public spaces by encouraging local participation and collaboration with municipalities, with the City of Santa Fe playing a key role in maintaining cleanliness and advancing community beautification initiatives.

The program focuses on the ongoing removal of litter along roads within Santa Fe. This represents the second year of program funding awarded to the Parks and Open Space Division, reinforcing continued investment in sustainable litter control and beautification efforts as well as developing our Park Ranger program internally.

FUNDING SOURCE: New Mexico Department of Transportation (NMDOT)
Fund Name/Number: QUAL LIFE / 255
Munis Org Name/Number: Quality of Life (QOL) / 2554150
Munis Revenue Object Name/Number: NMDOT / 490150
Munis Expenditure Object Name/Number: Service Contracts / 510310

ATTACHMENTS:
BAR
Agreement

Grants Manager

ERIKA LUJAN
ERIKA LUJAN (Jan 16, 2026 10:37:20 MST)

Log # *{Finance use only}*:	
Journal # *{Finance use only}*:	

City of Santa Fe, New Mexico
BUDGET AMENDMENT RESOLUTION (BAR)

DEPARTMENT / DIVISION NAME	DATE
Public Works / Parks and Open Space	12/23/2025

ITEM DESCRIPTION	ORG	OBJECT	PROJECT	INCREASE	DECREASE
EXPENDITURES				*{enter as positive #}*	*{enter as negative #}*
Service Contracts - Que Linda Beautification	2554150	510310	PRK2535506	90,000	
REVENUES				*{enter as negative #}*	*{enter as positive #}*
NM DOT - Que Linda	2554150	490150	PRK2535506	(90,000)	
				$ -	$ -

JUSTIFICATION: *(use additional page if needed)*
--Attach supporting documentation/memo

NM DOT Grant award for litter control via the Que Linda Beautification Program in the amount of $90,000 (term 06/30/26)

{Complete section below if BAR results in a net change to ANY Fund}

Fund(s) Affected	Fund Balance Increase/(Decrease)
TOTAL:	0

Phillip Lujan — 12/23/2025
Prepared By *{print name}* — Date

Carol Swenson — Dec 31, 2025
Business Operations Manager — Date

JOHN BURNETT (Jan 5, 2026 08:09:30 MST) — Jan 5, 2026
Department Director Signature — Date

{Use this form for Finance Committee/ City Council agenda items ONLY}

CITY COUNCIL APPROVAL

City Council Approval Date

Agenda Item #:

Andy Hopkins
Budget Officer — Date

Finance Director *{≤ $5,000}* — Date

City Manager *{≤ $60,000}* — Date

CITY OF SANTA FE, NEW MEXICO

RESOLUTION NO. 2025-67

INTRODUCED BY:

Mayor Alan Webber

Councilor Jamie Cassutt

A RESOLUTION

ACCEPTING A GRANT FROM THE QUE LINDA BEAUTIFICATION PROGRAM ADMINISTERED BY THE NEW MEXICO DEPARTMENT OF TRANSPORTATION; ENTERING INTO A GRANT AGREEMENT FOR A TOTAL AMOUNT OF $90,000.00, TERM ENDING JUNE 30, 2026; IDENTIFYING THE CITY MANAGER OR CITY MANAGER'S DESIGNEE AS THE SIGNATORY FOR THE AGREEMENT.

WHEREAS, the City of Santa Fe ("City") and the New Mexico Department of Transportation ("NMDOT") wish to enter into a grant agreement ("Agreement"), in the total amount of ninety thousand dollars $90,000.00, term ending June 30, 2026, under the "Que Linda Beautification Program" ("Program"), attached and incorporated as Exhibit A, the purpose of which is to control and remove litter from the roads and highways in Santa Fe; and

WHEREAS, costs that exceed the ninety thousand dollars ($90,000) are not covered in the Agreement; and

WHEREAS, the purpose of the Agreement is to partially fund "a permanent and continuous program to control and remove litter from the roads and highways of New Mexico to

the maximum extent possible"; and

WHEREAS, Section 3 of the Agreement states that the City must "adopt a written resolution of Program supports that includes a commitment to funding, ownership, liability, and maintenance".

NOW, THEREFORE, BE IT RESOLVED BY THE GOVERNING BODY OF THE CITY OF SANTA FE that the Agreement, for a total amount of $90,000, and with a term ending June 30, 2026, included as Exhibit A, is hereby approved.

BE IT FURTHER RESOLVED that the City Manger or the City Manager's designee is authorized to sign the agreement.

BE IT FURTHER RESOLVED that all allocated funds must be spent by June 30, 2026, and the City incorporates all agreements, covenants, and understandings between the parties hereto concerning the subject matter hereof, and all such covenants, agreements, and understandings have been merged into the written agreement.

BE IT FURTHER RESOLVED that the City is responsible for the Agreement; assumes the lead role in execution of the Agreement; agrees to the terms, conditions, and certification and reporting requirements of the Agreement; and assumes ownership, liability, and maintenance responsibility for all amenities related to the completion of the work described in the Agreement.

PASSED, APPROVED, and ADOPTED this 10th day of December, 2025.

Alan Webber (Dec 16, 2025 17:09:17 MST)
ALAN WEBBER, MAYOR

ATTEST:

Andréa Salazar

ANDREA SALAZAR (Dec 16, 2025 17:15:11 MST)

ANDRÉA SALAZAR, CITY CLERK

APPROVED AS TO FORM:

Erin McSherry

Erin McSherry (Dec 16, 2025 13:57:34 MST)

ERIN K. McSHERRY, CITY ATTORNEY

Legislation/2025/Resolutions/2025-67(R)/NMDOT Que Linda Grant Agreement

Exhibit A

Contract Number: _____
Vendor No.:_____
Project No.: _____
Control No: _____

NEW MEXCIO DEPARTMENT OF TRANSPORTATION
QUE LINDA BEAUTIFICATION PROGRAM
GRANT AGREEMENT

This Agreement is between the New Mexico Department of Transportation (Department) and City of Santa Fe (Grantee), collectively referred to as the "Parties." This Agreement is effective as of the date of the last party to sign it on the signature page below.

RECITALS

WHEREAS, the purpose of the Que Linda Beautification Program (Program) is to accomplish litter control throughout New Mexico, under the authority delegated to the Department by the "Clean Highways Act," NMSA 1978, Section 67-15-1 to -4 (Act) to conduct a permanent and continuous program to control and remove litter from the roads and highways of New Mexico to the maximum extent possible;

WHEREAS, the Department was appropriated funding through the General Appropriation Act, Laws 2024, Chapter 64, Section 11, for roadway beautification and litter control, of which a portion is being used for the purposes of carrying out the provisions of the Act; and

WHEREAS, the Act provides that the Department may enter into agreements and provide a Program for the purposes of carrying out the provisions of the Act.

AGREEMENT

Now, therefore, the Parties agree as follows:

1. Program Funding.

a. The Department hereby awards $90,000 to partially fund the Budget (Appendix A) with the purpose of conducting a permanent and continuous program to control and remove litter from the roads, highways and open space of New Mexico to the maximum extent possible.
b. The Grantee is responsible for all costs that exceed Program funding.
c. All allocated funds must be spent by June 30, 2026.
d. All allocated funds are eligible to be reallocated pursuant to Section 19.
e. The Grantee must repay Program funding to the Department if:
    1. The Program is cancelled or partially performed.
    2. A final audit conducted by the Department determines the following:
        i. an overpayment,
        ii. unexpended funds, or
        iii. ineligible expenses.

2. The Department:

a. Shall distribute the funds, identified in Section l(a), in a lump sum to the Grantee after:

1. The Department has received this Agreement fully executed with a Resolution of Sponsorship.

b. May perform Program monitoring that might consist of the following:

1. Conduct a review of the Grantee's performance and administration of the Program funds identified in Section l(a).
2. Conduct a review of subcontracts for administration of the Program funds.

3. The Grantee Shall:

a. Perform and participate in the Program by accomplishing the following:

1. Participating in 3 technical assistance meetings with the Que Linda Director for the development of a local beautification program plan;
2. Creating and adopting a formal local beautification program plan;
3. Hosting a minimum of 3 events in alignment with the 11 strategies of the Que Linda Program (Appendix D); and
4. Completing a minimum of 2 contracts in alignment with the 11 strategies of the Que Linda Program (Appendix D).

b. Procure and award any contract in accordance with applicable procurement law, rules, regulations and ordinances.

c. Adopt a written resolution of Program support that includes a commitment to funding, ownership, liability and maintenance.

d. Comply with any and all state, local and federal regulations including the Americans with Disabilities Act (ADA) and laws regarding noise ordinances, air quality, surface water quality, ground water quality, threatened and endangered species, hazardous materials, historic and cultural properties, and cultural resources.

e. Meet with the Department, as needed, or provide Program status reports within 30 days of request.

f. Acknowledge that the Department reserves the right to unilaterally adjust, modify, or cancel any and all funding identified in Section l(a) in order to ensure the expenditure of all funds.

g. Agree and acknowledge Program funds shall not be used for purposes other than those outlined and specified in Appendix A.

h. Comply with Department mandatory reporting requirements:

1. The Grantee shall submit an annual report on the progress of activities during the funding period.
2. The Grantee must participate in a minimum of 75% (3 out of 4) of the Que Linda statewide cohort meetings.

i. Agree that Program funds must be expended on or before June 30, 2026.

4. Both Parties Agree:

a. The inability to properly complete and administer the Program may result in the Grantee being

denied future Program funding.

b. The Department will not pay for any expenses incurred prior to the Parties signing the Agreement, after termination of the Agreement, or in excess of the amount of the Program funding noted in Section l(a).

5. Term.

This Agreement becomes effective upon signature of the Parties. The effective date is the date when the last party signed the Agreement on the signature page blow. This Agreement tenninates at 11:59:59 p.m. on June 30, 2026, unless terminated earlier as provided under this Agreement.

6. Termination.

The Department may tenninate this Agreement for any reason, by giving the Grantee 30 days written notice. On receipt of written notice from the Department, the Grantee shall suspend all Program activities unless otherwise directed by the Department in writing. The Parties acknowledge that termination will not nullify obligations incurred prior to the date of the written notice requiring termination. Neither Party has any obligations after termination, except as stated in Section l(e) and 15.

7. **Notices.**

For a notice under this Agreement to be valid, it must be in writing; be delivered by hand, registered or certified mail return receipt requested and postage prepaid, fax or e-mail; and be addressed as follows:

To the Department:

Amy Whitfield, Special Director
New Mexico Department of Transportation
P.O. Box 1149
Santa Fe, NM 87504-1149
Phone: 505-309-1066
Email: Amy.Whitfield@dot.nm.gov

To the Grantee:

Mark Scott, City Manager

200 Lincoln Ave
Santa Fe, NM 87501
Phone:
Email:

8. Third Party Beneficiary.

It is not intended by any of the provisions of any part of this Agreement to create in the public or any member of the public a third party beneficiary or to authorize anyone not a party to the Agreement to maintain a suit(s) for wrongful death(s), bodily and/or personal injury(ies) to person(s), damage(s) to property(ies), and/or any other claim(s) whatsoever pursuant to the provisions of this Agreement.

9. New Mexico Tort Claims Act.

As between the Department and Public Entity, neither party shall be responsible for liability incurred as a result of the other party's acts or omissions in connection with this Agreement. Any liability incurred in connection with this Agreement is subject to the immunities and limitations of the New Mexico Tort Claims Act, NMSA 1978, Section 41-4-1 to -27.

10. Scope of Agreement.
This Agreement constitutes the entire understanding between the Parties with respect to the subject matter of the Agreement and supersedes all other Agreements, whether written or oral, between the parties, except that this Agreement does not supersede the Grantee's rights under any other grant Agreement.

11. Terms of this Agreement.
The terms of this Agreement are lawful; performance of all duties and obligations must conform with and not contravene any state, local, or federal statutes, regulations, rules, or ordinances.

12. Legal Compliance.
The Grantee shall comply with all applicable federal, state, and local laws, regulations and Department policies in the performance of this Agreement, including, but not limited to laws governing civil right, equal opportunity compliance, environmental issue, workplace safety, employer-employee relations and all other laws governing operations of the workplace. The Grantee shall include the requirements of this Section 12 in each contract and subcontract at all tiers.

13. Equal Opportunity Compliance.
The Parties agree to abide by all federal and state laws and rules and regulations, and executive orders, pertaining to equal employment opportunity. In accordance with all such laws and rules and regulations, and executive orders, the parties agree to assure that no person in the United States will, on the grounds of race, color, national origin, ancestry, sex, sexual preference, age or handicap, be excluded from employment with, or participation in, any program or activity performed under this Agreement. If the parties are found to not be in compliance with these requirements during the term of this Agreement, the parties agree to take appropriate steps to correct these deficiencies.

14. Appropriations and Authorizations.
The terms of this Agreement are contingent upon sufficient appropriations and authorizations being made by the governing board of the Grantee, and the Legislature of New Mexico for performance of the Agreement. If sufficient appropriations and authorizations are not made by the Grantee and the Legislature, this Agreement will terminate upon written notice being given by one Party to the other. The Department and Grantee are expressly not committed to expenditure of any funds until such time as they are budgeted, encumbered, and approved for expenditure.

15. Accountability of Receipts and Disbursements.
There shall be strict accountability for all receipts and disbursements relating to this Agreement. The Grantee shall maintain all records and documents relating to the Program for a minimum of 5 years after completion. The Grantee shall furnish the Department and State Auditor, upon demand, any and all such records relevant to this Agreement. If an audit finding determines that specific funding was inappropriate or not related to the Program, the Grantee shall reimburse that portion to the Department within thirty (30)

days of written notification. If documentation is insufficient to support an audit by customarily accepted accounting practices, the expense supported by such insufficient documentation must be reimbursed to the Department within thirty (30) days.

16. Severability.
In the event that any portion of this Agreement is determined to be void, unconstitutional or otherwise unenforceable, the remainder of this Agreement will remain in full force and effect.

17. Applicable Law.
The laws of the State of New Mexico shall govern this Agreement, without giving effect to its choice of law provisions. Venue is proper in a New Mexico Court of competent jurisdiction in accordance with NMSA 1978, Section 38-3-l(G).

18. Amendment.
This Agreement may be amended by an instrument in writing executed by the Parties.

19. Reallocation of Funding.
The Grantee may request reallocation of the Program Funds from any Budget (Appendix A) item to other identified Budget items. The Grantee must submit a written request with the proposed Budget detailing the reallocation amount and the identified Budget item(s) and costs of which funds are being reallocated. The Grantee shall be allowed to reallocate pursuant to the written request upon receipt of approval from the Department and executed Amendment by the Parties pursuant to Section 18.

The remainder of this page is intentionally left blank.

Each party is signing this Agreement on the date stated opposite that party's signature. This Agreement is effective as of the date of the last party to sign it on the signature page below.

NEW MEXICO DEPARTMENT OF TRANSPORTATION

By: _____ Date: _____
Cabinet Secretary or Designee

Approved as to form and legal sufficiency.

By: _____ Date: _____
Office of General Counsel

City of Santa Fe

By: _____ Date: _____
Michael Garcia, Mayor

Attest

By: _____ Date: _____
Geralyn Cardenas, Interim City Clerk

Approved as to form and legal sufficiency.

By: Kevin L. Nault Date: Oct 31, 2025
Kevin L. Nault (Oct 31, 2025 15:57:56 MDT)
Kevin Nault, Assistant City Attorney

Finance Department:

By: _____ Date: _____
ANDREA PHILLIPS (Jan 20, 2026 08:00:12 MST)
~~Emily Oster, Finance Director~~ Acting Finance Director, Andrea Phillips

Appendix A: Project Budget and Scope of Work

Scope of Work. The Grantee shall complete and oversee the following activities.

Activities. The Grantee shall complete and oversee the following Que Linda Grant related activities in support of the Program, as situated in the Public Works Department, Parks and Open Space Division and under the oversight and in coordination with Department consultation. The Grantee is responsible for:

a. Contract organization for Project Management.
b. Partner with local nonprofit to host cleanup events and promote anti-litter messaging;
d. Partner with local nonprofit to organize volunteer cleanup events, and report illegal trash dumping;
e. Facilitate purchasing, shipping and contracted installation of trash cans.
f. Facilitate Volunteer Appreciation Event
g. Facilitate printing of interpretive materials and interpretive panels for trash cans.

Project Budget 1
See email attachment *''Appendix A_Que Linda FY26_Budget Tracking''*.

11 Strategies of Que Linda Statewide Beautification

Student Service Learning:

Leveraging local high school students provide three benefits: 1) creates a very affordable resource to help keep communities clean; 2) provides high school students with opportunities to engage in community service; 3) creates local ambassadors that spread anti-litter messaging.

Local high schools must incorporate service-learning requirements in certain courses. The requirements shall require a certain number of community service hours which can be met through participation in trash pickup and graffiti removal/prevention programs.

Litter Abatement Alternatives to Penalty Fines:

This program would serve as a resource for municipal and county court systems. For various reasons, residents are assessed penalties or court fees associated with a crime. In many instances, individuals cannot afford to pay the cost. As an alternative, the individual could be assigned to a local trash pickup and graffiti removal/prevention program.

Use of Corrections Contractors:

The New Mexico Corrections Department offers litter pickup, general landscaping and graffiti clean-up services. Cost for services range but are highly competitive. LBPs can leverage services for contract maintenance of their property.

County Inmate Litter Abatement Program:

Utilizing incarcerated individuals for trash pickup is a long-standing practice. Oftentimes county-run facilities are discouraged to establish this program because inmates are incarcerated for short periods. Nonetheless, an established program could put short-term inmates to work immediately. The County correctional facility would establish the program that utilizes inmates to perform trash pickup services. This program would provide the service to the LBP.

Elementary Anti-Litter Education Campaign:

The State of NM is rolling out a new anti-litter campaign. It can provide media to local elementary schools that incorporate anti-litter activities into their curriculum. Activities could include coloring contests, recording radio ads, writing letters to newspapers, campus clean up days, recycling programs, etc. This program is integral to building ambassadors among the youth in the community who will have a positive influence within their families.

Business Corridor Adoption Program:

Engaging businesses in an effort to keep cities clean is longstanding. Typically businesses would adopt a corridor and become responsible for its upkeep. In this program, the business would simply provide a financial sponsorship. The sponsorship would go to the LBP who would utilize the resources for contract maintenance.

Reporting Illegal Trash Dumping Hotline:

Illegal dumping is a major issue in several communities. It's typically driven by limited options for legal dumping. When residents dump illegally, or lose trash because of an unsecured load, the trash often includes personal identifiable information. Local law enforcement agencies shall establish a hotline or online portal where this information could be anonymously obtained. Penalties for violators would need to be established in ordinance.

Secure Loads Establishment and Enforcement:

Unsecure loads is a major cause of messy roadways. Local governments must put an ordinance in place that establishes a penalty for driving with an unsecured load. In addition to this penalty, trash collection centers must impose a fee when a resident arrives with an unsecured load.

Establish Free Weekend Events at Collection Centers:

Affordability may be an issue for some residents. If trash authorities were to provide "Free Weekends" once a month, it would encourage residents to dump legally.

Neighbor Rates at Collection Centers:

Some communities and counties do not have adequate access to a collection center, therefore, an established "Neighbor Rate" at the closest facility will encourage residents to dump trash legally.

Community Trash Pick-up Events:

Some residents, for various reasons, are unable to take trash to a collection center on their own. This program would identify weekends, throughout the year, when trash authorities, together with volunteers, would pick up trash and deliver it to a collection center. Residents would need to signup for this service and provide a justification.

(Insert “Que Linda Resolution FY26_Resolution FIR” found in email attachment)

City of Santa Fe New Mexico

Finance Department

Project Ledger Request Form

Date of Request: 12/23/2025

Project Title: Que Linda Beautification Program

Project Type: ☐ CIP ☑ Grant ☑ Internal Tracking

Project ID: PRK2535506

Grant ID: S2639

Approved By: ERIKA LUJAN (Dec 26, 2025 08:51:29 MST)

CMT (Finance Use Only)

Department: Public Works Project Manager: Sidney Snyder Ext: 505-795-4679

Project Date Range: 12/31/2025 to 06/30/2025 2026 ☐ Create Fixed Asset

---

☐ Multi-Funding (complete all funding sources, should equal 100%)

Funding Source: NM Dept. of Transportation NMDOT % of Funding: 100

MUNIS ORG: 2554150 MUNIS OBJ: 490150 Awarded Amount: 90,000

Funding Source: _____ % of Funding: _____

MUNIS ORG: _____ MUNIS OBJ: _____ Awarded Amount: _____

Expense String Phase:

A project must have at least one phase identified, this can be used as an additional level of tracking, for example, CIP - Design, Construction, etc. For Grants can be used as reimbursable types, such as transportation, salaries.

(You can create more than one phase and you can default MUNIS ORGs and OBJs, optional)

Phase: Second Year - 2026 MUNIS ORG: 2554150 MUNIS OBJ: 510310

Grants Only (list all grants if applicable):

Grantor Name: NMDOT GRANT AGREE QUE LINDA FY26 Awarded Amount: 90,000.00

AR Charge Code: 2554150.490150 ☐ Grant funds multiple projects (Complete a form for each project)

Grantor Id: 700000 Federal CFDA (if applicable): N/A

Grantor Name: ALSO SEE QUE LINDA-RESOLUTION # 2025-67 Awarded Amount: N/A

AR Charge Code: _____ ☐ Grant funds multiple projects (Complete a form for each project)

Grantor Id: _____ Federal CFDA (if applicable): _____

(If grants please provide all grant award documents with form) ☐ Attached Grant Documentation

Signature: SSnyder
SSnyder (Dec 31, 2025 09:09:59 MST)

Email: sksnyder@santafenm.gov

Signature: *Melissa McDonald*

Email: mamcdonald@santafenm.gov

CITY OF SANTA FE

The Purchasing Memo

Date: December 17, 2025

To: Governing Body, Finance Committee, and Public Works & Utilities Committee

From: Joshua Chandler, Contract Administrator

Via: Eric Candelaria, ITT Department Director EC

Subject: 2026 Bundled Support

Vendor Name: Altura Communication Solutions LLC

Munis Vendor Number: 2973

ITEM AND ISSUE:

Request for Approval Amendment No. 2 to Item #20-0041 Services with Altura Communication Solutions to Increase the Compensation by $411,166.01 for a New Total Amount of $1,238,766.08, to Extend the Termination Date to December 31, 2027 and, to Amend the Scope of Services to Add Avaya Maintenance and Support Services. (Eric Candelaria, ITT Director; edcandelaria@santafenm.gov)

BACKGROUND AND SUMMARY:

Waterfield Signature Support (Services) is an Information Technology Infrastructure Library (ITIL) based service provided to our customers across critical technology areas. Waterfield's Signature Support offering consists of the monitoring, troubleshooting, device and service management (incident, change, problem, MACO), and reporting of the Customer's Managed Infrastructure. Service Assets common to all Waterfield supported technologies are based upon practices recommended by the ITIL and specific OEM's. All remote Services will be provided 24x7x365, except where noted. This document (the "Services Description") describes the Service elements, features, and Assets of Waterfield Signature Support.

PRIOR APPROVALS AND SUPPORTING INFORMATION:

FUNDING SOURCE:

Fund Name/Number: Services of Other Departments/ 620

Munis Org Name/Number: ITT EAS/ 6203600

Munis Object Name/Number: Software Subscriptions/ 530710

Budget Officer / Designee: Andy Hopkins **Date:** 01/05/2026

Budget Officer Comment/Exceptions: _____

PROCUREMENT METHOD:

The procurement method used was NMSA 1978, Section 13-1-28 through 13-1-199, GSA

Chief Procurement Officer (CPO)/Designee: _____ **Date:** 01/06/2026

CPO Comment/Exceptions: _____

ASSOCIATED APPROVALS:

IT Components included? ☒ Yes | ☐ No

Approval: Eric Candelaria Eric Candelaria (Dec 18, 2025 08:39:19 MST) **Title:** ITT Department Director **Date:** _____

Comment/Exceptions: _____

Treasury/Point of Sale Components included? ☐ Yes | ☒ No

Approval: _____ **Title:** _____ **Date:** _____

Comment/Exceptions: _____

Vehicles included? ☐ Yes | ☒ No

Approval: _____ **Title:** _____ **Date:** _____

Comment/Exceptions: _____

Construction to City Facilities, Furniture, and/or Fixtures included? ☐ Yes | ☒ No

Approval: _____ **Title:** _____ **Date:** _____

Comment/Exceptions: _____

Is this an externally funded purchase? ☐ Yes | ☒ No

If yes, what is the issuing agency: _____

Approval: _____ **Title:** _____ **Date:** _____

Comment/Exceptions: _____

Is this a Capital Asset or Project? ☐ Yes | ☒ No

Project Ledger Number: _____

Approval: _____ **Title:** _____ **Date:** _____

Comment/Exceptions: _____

ATTACHMENTS:

GSA memo

Altura Communications Solutions Agreement Amendment 2 to Item# 20-0041

Altura Communications Solutions Agreement Amendment 1 to Item# 20-0041

Altura Communications Solutions Agreement Item# 20-0041

Exhibit A-2026 Bundled Support 2 Year Term/ Proposal

Certificate of Insurance

W9

MEMORANDUM

Date: December 12, 2025

To: Altura Communication Solutions LLC

Attn: Klaus Hillman, Senior Vice President of Sales

From: *Travis Dutton-Leyda, Chief Procurement Officer*, City of Santa Fe Purchasing Division
RE: GSA Contract GSA # 47QTCA19D007R, GS-35F-0666W, and GS-35F-0156V

The City of Santa Fe by mutual agreement between the City and Altura Communication Solutions LLC is willing to enter into a GSA price agreement based on the following requirements:

1. Provide an updated Federal Supply Schedule to include current or updated contract dates.

2. *Purchases based on 13-1-129 (A)(1) NMSA 1978:* The Contractor is willing to extend their GSA pricing, terms and conditions to the City of Santa Fe at prices equal to or less than the contractor's current federal supply contract price (GSA), providing the contractor has indicated in writing a willingness to extend such contractor pricing, terms and conditions to the City of Santa Fe and the purchase order adequately identifies the contract relied upon.

Please respond by completing the information below. Check the proper box, fill in the requested information, including signature, scan and upload to the email you received with this request.

☑ **I agree to extend and/or renew the above referenced GSA price agreement.**

☐ **I DO NOT agree to extend and/or renew the above referenced GSA price agreement.**

Klaus Hillmann, SVP Sales
Print Name, Title

Email Address

Signature

Company Name

12-15-2025
Date

Address

Cc: Travis Dutton-Leyda, Chief Procurement Officer
Procurement File

GENERAL SERVICES ADMINISTRATION

Federal Supply Service

Authorized Federal Supply Schedule Price List

CONTRACT NUMBER:

47QTCA19D007R

COOP PURCH

PERIOD COVERED BY CONTRACT:

03/14/2019 through 03/13/2029

+2, 5-year options

opentext™

Information reimagined

Open Text, Inc.

2440 Sand Hill Rd., Ste. 301

Menlo Park, CA 94025-6900

Phone: (301) 340-4069

E-Mail: avernon@opentext.com

Website: http://www.opentext.com

BUSINESS SIZE: Other than Small

DUNS NUMBER: 064596158

Pricelist current through **PA-0079**, effective date **06/21/2025.**

Prices Shown Herein are Net (discount deducted)

On-line access to contract ordering information, terms and conditions, up-to-date pricing, and the option to create an electronic delivery order are available through GSA Advantage! a menu- driven database system. The Internet address for GSA Advantage! is http://www.gsaadvantage.gov. For more information on ordering go to the following website: https://www.gsa.gov/schedules.

SPECIAL ITEM NUMBER 511210 - SOFTWARE LICENSES

Includes both term and perpetual software licenses and maintenance.

SPECIAL ITEM NUMBER 611420 – INFORMATION TECHNOLOGY TRAINING

Includes training on hardware, software, cloud, and other applicable system

SPECIAL ITEM NUMBER OLM – ORDER-LEVEL MATERIALS (OLMs)

OLMs are supplies and/or services acquired in direct support of an individual task or delivery order placed against a Schedule contract or BPA. OLM pricing is not established at the Schedule contract or BPA level, but at the order level. Since OLMs are identified and acquired at the order level, the ordering contracting officer (OCO) is responsible for making a fair and reasonable price determination for all OLMs.

OLMs are procured under a special ordering procedure that simplifies the process for acquiring supplies and services necessary to support individual task or delivery orders placed against a Schedule contract or BPA. Using this new procedure, ancillary supplies and services not known at the time of the Schedule award may be included and priced at the order level.

OLM SIN-Level Requirements/Ordering Instructions:
OLMs are:
- Purchased under the authority of the FSS Program
- Unknown until an order is placed
- Defined and priced at the ordering activity level in accordance with GSAR clause 552.238-115 Special Ordering Procedures for the Acquisition of Order-Level Materials. (Price analysis for OLMs is not conducted when awarding the FSS contract or FSS BPA; therefore, GSAR 538.270 and 538.271 do not apply to OLMs)
- Only authorized for use in direct support of another awarded SIN.
- Only authorized for inclusion at the order level under a Time-and-Materials (T&M) or Labor-Hour (LH) Contract Line Item Number (CLIN)
- Subject to a Not To Exceed (NTE) ceiling price

OLMs are not:
- "Open Market Items."
- Items awarded under ancillary supplies/services or other direct cost (ODC) SINs (these items are defined, priced, and awarded at the FSS contract level)

OLM Pricing:
- Prices for items provided under the Order-Level Materials SIN must be inclusive of the Industrial Funding Fee (IFF).
- The value of OLMs in a task or delivery order, or the cumulative value of OLMs in orders against an FSS BPA awarded under an FSS contract, cannot exceed 33.33%.

NOTE: When used in conjunction with a Cooperative Purchasing eligible SIN, this SIN is Cooperative Purchasing Eligible.

AUTHORIZED INFORMATION TECHNOLOGY SCHEDULE PRICELIST
GENERAL PURPOSE COMMERCIAL INFORMATION TECHNOLOGY
EQUIPMENT, SOFTWARE AND SERVICES

MAS

Altura Communication Solutions, with offices nationwide, is one of Avaya's largest Platinum authorized Business Partners and a leading provider of communication enabled solutions and professional services to enterprises. For nearly two decades, enterprises throughout North America have trusted Altura with solving their business issues. Altura's top rated and industry leading service, key strategic partnerships providing a full suite of converged voice and data network solutions, provide the highest business value to our customers.

Special Item No. 54151S Information Technology Professional Services
Special Item No. 811212 Maintenance of Equipment, Repair Services

SPECIAL ITEM NUMBER 54151S - INFORMATION TECHNOLOGY (IT) PROFESSIONAL SERVICES

FPDS Code D301 IT Facility Operation and Maintenance
FPDS Code D302 IT Systems Development Services
FPDS Code D306 IT Systems Analysis Services
FPDS Code D308 Programming Services
FPDS Code D316 IT Network Management Services

SPECIAL ITEM NUMBER 811212 – MAINTENANCE OF EQUIPMENT, REPAIR SERVICES

FSC/PSC Class J058 Maint/Repair/Rebuild of Equipment Communication, Detection, and Coherent Radiation Equipment.
FSC/PSC Class J070 Maint/Repair/Rebuild of Equipment-ADP Equipment/Software/Supplies/Support Equipt.

Note 1: All non-professional labor categories must be incidental to and used solely to support hardware, software and/or professional services, and cannot be purchased separately.
Note 2: Offerors and Agencies are advised that the Group 70 – Information Technology Schedule is not to be used as a means to procure services which properly fall under the Brooks Act. These services include, but are not limited to, architectural, engineering, mapping, cartographic production, remote sensing, geographic information systems, and related services. FAR 36.6 distinguishes between mapping services of an A/E nature and mapping services which are not connected nor incidental to the traditionally accepted A/E Services.
Note 3: This solicitation is not intended to solicit for the reselling of IT Professional Services, except for the provision of implementation, maintenance, integration, or training services in direct support of a product. Under such circumstances the services must be performance by the publisher or manufacturer or one of their authorized agents.

Altura Communication Solutions
1540 South Lewis Street
Anaheim, CA 92805-6423
Phone: 508-458-4646
Fax: 508-458-4636
www.alturacs.com

Contract Number: **GS-35F-0666W**
Period Covered by Contract: **October 1, 2020 - Sep 30, 2025**

General Services Administration
Federal Acquisition Service

Pricelist current through Modification **PS-00**35

Products and ordering information in this Authorized FSS Information Technology Schedule Pricelist are also

AUTHORIZED FEDERAL SUPPLY SERVICE
MULTIPLE AWARD SCHEDULE PRICE LIST
GENERAL PURPOSE COMMERCIAL INFORMATION TECHNOLOGY
EQUIPMENT, SOFTWARE AND SERVICE

SUBCATEGORY F02 IT HARDWARE

SIN 33411 PURCHASING OF NEW ELECTRONIC EQUIPMENT

33411 Includes desktop, laptop, tablet computers (including rugged), servers, storage equipment, hyperconverged integrated systems, supercomputers, routers, switches and other communications equipment, IT security equipment (hardware based firewalls), audio and video (AV) equipment, public address systems, monitors/displays, sensors and other Internet of Things (IOT) devices, printers and Multi-Function Device (MFD) equipment, broadcast band radio, two-way radio (LMR), microwave radio equipment, satellite communications equipment, radio transmitters/receivers (airborne), radio navigation equipment/antennas, optical/imaging systems, and associated peripherals required for operations (such as controllers, connectors, cables, drivers, adapters, etc., ancillary installation of any equipment purchased.

Cooperative Purchasing: Yes

FSC/PSC Code: 7010

SIN 811212 COMPUTER AND OFFICE MACHINE MAINTENANCE AND REPAIR

811212 Maintenance, Repair Service, and Repair Parts/Spare Parts for Government-Owned General Purpose Commercial Information Technology Equipment, Radio/Telephone Equipment. (After Expiration of Guarantee/Warranty Provisions and/or When Required Service Is Not Covered by Guarantee/Warranty Provisions) and for Leased Equipment

Cooperative Purchasing: Yes

FSC/PSC Code: J070

SUBCATEGORY F03 IT SERVICES

SIN 54151S INFORMATION TECHNOLOGY PROFESSIONAL SERVICES

54151S IT Professional Services and/or labor categories for database planning and design; systems analysis, integration, and design; programming, conversion and implementation support; network services, data/records management, and testing.

Cooperative Purchasing: Yes

FSC/PSC Code: D399

SUBCATEGORY F04 IT SOFTWARE

SIN 511210 SOFTWARE LICENSES

511210 Includes both term and perpetual software licenses and maintenance. Includes operating system software, application software, EDI translation and mapping software, enabled email message-based applications, Internet software, database management applications, and other software.

Cooperative Purchasing: Yes

FSC/PSC Code: 7030

SIN 54151 SOFTWARE MAINTENANCE SERVICES

54151 Software maintenance services creates, designs, implements, and/or integrates customized changes to software that solve one or more problems and is not included with the price of the software. Software maintenance services includes person-to-person communications regardless of the medium used to communicate: telephone support, online technical support, customized support, and/or technical expertise which are charged commercially.

Cooperative Purchasing: Yes

FSC/PSC Code: J070

SUBCATEGORY F01 IT SOLUTIONS

SIN 518210C CLOUD COMPUTING AND CLOUD RELATED IT PROFESSIONAL SRVICES

518210C Includes commercially available cloud computing services such as Infrastructure as a Service (IaaS), Platform as a Service (PaaS), and Software as a Service (SaaS) and emerging cloud computing services. IT professional services that are focused on providing the types of services that support the Government's adoption of, migration to, or governance/management of cloud computing. Specific cloud related IT professional labor categories and/or fixed-price professional services solutions (e.g., migration services) that support activities associated with assessing cloud solutions, refactoring workloads for cloud solutions, migrating legacy or other systems to cloud solutions, providing management/governance of cloud solutions, DevOps, developing cloud native applications, or other cloud oriented activities are within scope of this SIN.

Cooperative Purchasing: Yes

FSC/PSC Code : DB10

Cooperative Purchasing: Yes

ORDER-LEVEL MATERIALS

SIN OLM ORDER-LEVEL MATERIALS (OLMs)

Ordering activities may go to www.gsa.gov/olm for more information on OLMs established and priced at the order level.

For more information on ordering from Federal Supply Schedules click on the following web link: www.fss.gov.

Avaya Federal Solutions, Inc.
7415 Boston Blvd.
Springfield, VA 22153
1-800-492-6769

Contract Number: GS-35F-0156V

Period Covered by Contract:

January 8, 2024 through Jan 7, 2029

Price list current through Modification # 222 dated October 31, 2025

*On-line access to contract ordering information, terms and conditions, up-to-date pricing, and the option to create an electronic delivery order are available through GSA Advantage!®, a menu-driven database system. The Internet address for GSA Advantage!® is: www.*GSAAdvantage.gov*.*

Item #: _____
Munis Contract #: 3201719
Original Contract Item #: 20-0041
GSA #:GS-35F-0666W, GS-35F-0156V, GSA-47QTCA19D007R

CITY OF SANTA FE
AMENDMENT No. 2 TO
ALTURA COMMUNICATIONS SOLUTIONS AGREEMENT
ITEM # 20-0041

This AMENDMENT No. 2 (the "Amendment") amends the CITY OF SANTA FE CONTRACT, dated February 3, 2020 (the "Contract"), between the City of Santa Fe (the "City") and Altura Communication Solutions. (the "Contractor"). The date of this Amendment shall be the date when it is executed by the City and the Contractor whichever occurs last.

RECITALS:

A. Under the terms of the Contract, Contractor has agreed to provide Avaya Maintenance and Support Services.

B. Pursuant to Article 8 of the Contract, and for good and valuable consideration, the receipt and sufficiency of which are acknowledged by the parties, the City and the Contractor agree as follows:

1. SCOPE OF SERVICES

Article 2 of the Contract is amended to provide the Avaya Maintenance and Support Services 1/1/2026-12/31/2027, so that Article 1 reads as follows:

Altura shall provide the products, maintenance and support as stated in Quote 45516.10 and support details attached as Exhibit A.

2. COMPENSATION.

Article 3 of the Contract is amended to increase the amount of compensation by a total of four hundred and eleven thousand one hundred and sixty-six dollars and one cent ($411,166.01) so that Article 3 reads in its entirety

as follows:

The total increase in compensation under this Amendment no. 2 is $411,166.01 including New Mexico gross receipts tax ("NMGRT") levied at the rate of 8.1875%. The total compensation of this agreement shall not exceed one million two hundred and thirty-eight thousand and seven hundred and sixty-six dollars and eight cents ($1,238,766.08) including NMGRT.

- Compensation paid 12/31/2019 - 12/31/2022 equals $243,640.86
- Compensation paid under Amendment 1, through 12/31/2025 equals $583,959.21
- Compensation paid under Amendment 2 through 12/31/2027 equals $411,166.01

3. TERM.

Article 5 of the Agreement is hereby deleted in its entirety and substituted with the following Article 5 in its place:

THIS AGREEMENT SHALL NOT BECOME EFFECTIVE UNTIL APPROVED IN WRITING BY THE CITY. The Agreement shall begin on the date approved by the City, and end on 12/31/2027. The City reserves the right to renew the contract on an annual basis by mutual agreement not to exceed ten years in accordance with the NMSA 1978 § 13-1-50 through 152.

4. CONTRACT IN FULL FORCE.

Except as specifically provided in this Amendment, the Contract remains and shall remain in full force and effect, in accordance with its terms.

IN WITNESS WHEREOF, the parties have executed this Amendment No. 2 to the Contract as of the dates set forth below.

CITY OF SANTA FE:

_____

CITY MAYOR

CONTRACTOR:
ALTURA COMMUNICATIONS SOLUTIONS

Klaus Hillmann (Dec 4, 2025 17:30:34 EST)

KLAUS HILLMAN
SENIOR VICE PRESIDENT OF SALES

ATTEST:

_____

CITY CLERK

CITY ATTORNEY'S OFFICE:

FRANK RUYBALID, ASSISTANT CITY ATTORNEY

APPROVED FOR FINANCES:

BRIAN MOYA

FINANCE DIRECTOR 01/06/2026

ALTURA
communication solutions
A Waterfield company

EXHIBIT A

PROPOSAL

CITY OF SANTA FE

2026 Bundled Support - 2 Year Term

VERSION	QUOTE #	DATE PREPARED	PREPARED FOR	PREPARED BY
3	45516.10	10/29/2025	Edward Romero Network Engineer	MaryGrace Crisci (714) 948-8450 marygrace.crisci@waterfield.com



Avaya License Activation Fee

License Activation

Altura will perform a remote license activation during regular business hours. If Customer's Change Policy or system requirements require after hours license activation, then additional labor will be required.
Normal turnaround time for license activation will be 10 business days after the PO is provided to Altura. If licenses are required in less than 5 business days from receipt of the Customer PO, then an expedite fee of $500 will be required.

Any additional services will be added via a Job Change Order.

Signature Support

Signature Support

This Services Description and all Services and Deliverables hereunder shall be governed by the terms and conditions outlined in the Master Services Agreement (the "Agreement") between Customer and Waterfield. If there is a conflict between this Services Description and the Agreement, the Agreement will control the subject matter hereof unless expressly amended in this SOW. Waterfield's Signature Support Program ("SSP") provides the following on a pre-paid basis for specific Customer platforms and applications described in the "Support Entitlements" section of this agreement. All services provided under this agreement will be delivered remotely.

SIGNATURE SUPPORT - SERVICES DESCRIPTION
Customer agrees to purchase and Waterfield agrees to provide Signature Support ("Services") according to the terms of this contract. The terms governing the purchase and sale of the Services are contained in this Services Schedule and the Master Sales Agreement. Signature below acknowledges that signatory is duly authorized to accept this Service Agreement. Acceptance by Waterfield is evidenced by an authorized signature.

Waterfield Signature Support (Services) is an Information Technology Infrastructure Library (ITIL) based service provided to our customers across critical technology areas. Waterfield's Signature Support offering consists of the monitoring, troubleshooting, device and service management (incident, change, problem, MACD), and reporting of the Customer's Managed Infrastructure. Service Assets common to all Waterfield supported technologies are based upon practices recommended by the ITIL and specific OEM's. All remote Services will be provided 24x7x365, except where noted. This document (the "Services Description") describes the Service elements, features, and Assets of Waterfield Signature Support.

REQUIREMENT OF MANUFACTURER SUPPORT CONTRACT
Access to manufacturer escalation support and access to patches and software for the covered systems is contingent upon purchase and maintenance of a Manufacturer Support Contract. If no manufacturer support exists or when equipment is deemed unsupportable by the manufacturer, or it is deemed not serviceable due to lack of replacement part availability, Waterfield support will be best effort.

Services Elements Summary

The following tables summarize the service elements included in this Waterfield Signature Support offer:

Service Element	
24x7x365 Service Desk	x
Incident Management	x
Change Management	x
WATERFIELD Service Portal	x

Bundled Hours	x

Scope of Signature Support

Support coverage for this contract applies to the type and quantities of licensed users listed in the quote, applications, hardware and assets listed below only. Upon onboarding, if additional elements or quantities are identified and confirmed as requested for inclusion under support, a Contract Change Notice amendment will be issued for the deltas in coverage and costs. Additions, upgrades or expansions of the environment that occur during the contracted term will also be covered under a Contract Change Notice amendment.

Unless stated elsewhere in this contract, all Covered Assets listed will be onboarded to Waterfield Monitoring and placed under the Signature Support coverage elements defined in this contract.

Site		
3273321 - 200 LINCOLN AVE, SANTA FE, NM 87501		
Covered Assets	**Covered Qty**	**Hardware Replacement**
CORE PROCESSOR	1	VIRTUAL
GATEWAY	6	N/A
MESSAGING	2	VIRTUAL
SYSTEM MGR	1	VIRTUAL
SESSION MGR	1	VIRTUAL
AADS	1	VIRTUAL
SESSION BOARDER CONTROLER	2	VIRTUAL
AES	1	VIRTUAL

Hardware Replacement Legend:
V = Waterfield parts replacement NBD
A = Manufacturer parts replacement NBD
B = Manufacturer parts replacement 24x7x4
C = Manufacturer parts Replacement 8x5x4
D = Manufacturer parts replacement and onsite dispatch NBD
E = Manufacturer parts replacement and onsite dispatch 24x7x4
F = Manufacturer parts replacement and onsite dispatch 8x5x4

If applicable, the following vendors are covered by 3rd Party Case Management under this contracted support agreement:

Vendor Name	Support Type
VENDOR NAME	Case Management

INTEGRATED APPLICATIONS NOT COVERED

If present, for applications that have an integration to covered assets listed above but that are not supported by Waterfield directly; Waterfield will support integration points within the covered assets only, far end applications to be supported by customer or their vendor.

24x7x365 Service Desk

Waterfield will provide 24x7 support to Customer through our Service Desk with best-in-class solutions delivered and supported by our team of certified experts. Additionally, we provide support through our Customer Service Portal for ticket creation and disbursement.

- Waterfield will provide 24x7 system support for the solution environment. This includes access to Waterfield's 24x7 Service Desk. All incidents will be responded to and managed according to Waterfield's ticketing system.
- Waterfield will document procedures for communicating issues and accessing support.
- Customer will be able to open and track tickets via the Waterfield Support Line (phone), the Waterfield Collaboration Portal (web), and email.

Incident Management

Waterfield will remotely identify, troubleshoot, and restore normal operational functionality if an Incident is detected in a Managed Asset.
Waterfield Responsibilities

- Create tickets from detected or reported Events, where required
- Manage Incidents by classifying, prioritizing, troubleshooting, and restoring normal operation
- Escalation to the primary telephony OEM is included in Signature Support. Any other OEM or 3rd party escalations are only supported under the Enhanced Signature Support offering for 3rd Party Vendor Management.
- Assign and reassess Incident priorities in accordance with Waterfield process and policy as defined in the Waterfield Service Management Governance addendum.
- Notify relevant parties about Incidents, keeping the parties updated through Incident closure, per communication protocols established at onboarding (preferred customer contacts, escalation points, etc)
- Provide Incident reports pertaining to the Managed Assets available via the Waterfield Management Portal.

Customer Responsibilities

- Provide means for Waterfield to access, troubleshoot, and resolve Managed Assets. Primary remote access for Waterfield will be via the Waterfield Monitoring Server.
- Provide details about support contracts and other documentation/authorization required to facilitate Incident resolution
- Contact Waterfield if Customer believes an Incident is in-progress or has occurred
- PerformWaterfield or third-party recommended changes to Managed Assets or third-party hardware, software, or services, if outside of the scope of Services Management.
- Provide Waterfield with updates to Customer initiated actions related to the Incident(s).

Please note: Incident Tickets will be on "hold" for any period of time Waterfield is delayed in receiving required information from Customer, the End User, or applicable third-party service providers.

Hardware Replacement (Parts Coverage)
Hardware replacement coverage listed in the Covered Assets table will be replaced under this contract via Waterfield or Manufacturer Support parts coverage as noted. Parts will be replaced on a Next Business Day basis if replacement if identified prior to 12pm PST.

Waterfield Technician Dispatch (Onsite Support)
Based on evolving virtualization technologies and support models that have greatly reduced the need for onsite support, and to keep costs

down to our customers, technician dispatch for troubleshooting or replacement hardware installation, if required, will be provided on a Time and Materials basis only.

- If replacement parts provided by the OEM or Waterfield require pre-staging or configuration prior to shipment to customer site, Waterfield will notify customer and stage the hardware at a Waterfield office location and ship to customer site for customer installation.
- Upon request, onsite technician support will be provided on a Best Effort basis with a Next Business Day target for Priority 1 and 2 Incidents and subject to hardware and resource availability and installation readiness of hardware, to be billed on a Time and Materials basis or applied against contracted Bundled Hours if purchased. Dispatch will be supported by a Waterfield resource or Waterfield authorized contractor.
- If Manufacturer onsite dispatch is purchased, dispatch is subject to the SLA of the purchased model per the Covered Assets table above

Problem Management

Problem Management is the process of identifying the cause of an error in the supported solutions, usually reported as occurrences of related Incidents, and removing the causes of these errors permanently. Problem resolution and elimination of root cause often calls for the application of a change in the existing environments.

Problem cases are created as necessary and worked by Waterfield staff in order to find the root cause for a single or set of related issues and apply a permanent fix.

Change Management

Change Management is the process of recording and managing the planned deployment of alterations to customer environments, processes, and documentation. Waterfield will utilize Customer's documented Change Management process, if available. Otherwise, Waterfield utilizes its own system-enforced Change Management process to complete any change needed as the result of an Incident or Problem ticket.

If required by documented customer change procedures, Waterfield will prepare and provide a Method of Procedure (MOP) document in Waterfield's standard format outlining the details, timing and impacts of said change for customer Change approval processing. If Waterfield is required to participate in customer Change Advisory Board meetings or utilize custom formats or process for MOP development, additional charges may apply.

Waterfield is not accountable for Changes made by Customer staff outside of the agreed upon, documented Change Process.
Waterfield will manage the deployment of technical changes to the Managed Assets (e.g. configuration changes), in Customer's environment as a result of a change activity. Change types supported by Change Management are Emergency, Normal, and Standard Changes.
Waterfield Responsibilities

- Manage the lifecycle of Change Management Requests, as required, resulting from an Incident, Problem, Service Request, as otherwise mutually agreed to in writing or as required in accordance with the Change Management Process
- Coordinate, provide governance and execute changes to Managed Assets, using commercially reasonable efforts to minimize any adverse impacts of those changes to Customer's environment
- Validate and prioritize Change Requests based on urgency
- Manage end-to-end lifecycle of Change Requests
- Provide notifications of change request start and completion for Customer-impacting changes
- Work with Customer to identify and approve Standard Changes
- As part of Customer's CAB process, discuss with Customer any changes to Monitored Assets that may result from Changes approved with respect to the Managed Assets
- Perform pre- and post-change Health Check

Customer Responsibilities

- Provide written documentation to Waterfield at onboarding, or as modified throughout the contract term, defining any custom Change Policies or processes that must be adhered to by Waterfield
- Submit Requests for Change (RFCs) for Waterfield Managed Assets as Service Requests via the Portal, Smart Bonding, or Customer ITSM
- Submit Requests for Change (RFCs) for Customer Managed Assets as Changes via the Portal, Smart Bonding, or Customer ITSM
- Inform Waterfield on Customer scheduling, communicating, and executing of changes or customer performed additions or modifications to the supported environment.
- Provide Waterfield access to Customer CAB meetings and facilitate communication between Waterfield and Customer's CAB
- Confirm and maintain scheduled windows for change activities
- Determine and mitigate any impacts to the Monitored Assets or out-of-scope devices as a result of a change to the Managed Assets
- Review and approve (within 48 hours or less) Waterfield-initiated Changes to Managed Assets via Waterfields Service portal.

WATERFIELD Service Portal

Waterfield will provide a web-based Portal that provides Customer reports and information related to the Services. The Waterfield Management Portal will be the primary means of communication on all cases between the Waterfield Service Team and the customer.
Waterfield Responsibilities

- Implement and make available to Customer a Portal for the Service
- Provide capability to open, update, and review cases, changes, etc.
- Provide capability to view reports

Customer Responsibilities

- Provide end user profiles for Portal access in accordance with relevant industry practice
- Review and update (as needed) Incidents and Change Requests

Bundled Hours - 24 Hours Annual Allotment

Upon contract activation and at the anniversary date of each subsequent year of a multi-year contract, Customer's services account will be credited with the specified annual hours of Waterfield Services to be used at Customer's discretion. Additional hours over and above the included/bundled hours will be charged at the contracted rate below. Bundled hours allotment and rate are covered in the Program Fees section below.

All work requested under Bundled Hours is facilitated, scheduled and coordinated by the Waterfield support team and all hours spent by all roles engaged in the planning and execution of requested work are accrued against the Bundled Hours. Utilization of hours is tracked and reported to customers on a monthly basis or available upon request.

Bundled hours are intended to be used within the contract year and do not rollover to subsequent years.

SERVICES REQUESTS (MOVE, ADD, CHANGE AND DELETE - MACD)
Typical uses for these hours include transactional programming requests generally related to specific user additions, removals or changes and not holistic and scoped changes as outlined above. Waterfield maintains flexibility in working with our customers on the utilization of Bundled Hours, however they are intended for use primarily for MACD defined as follows:

- Requests are made via a ticket on the Waterfield portal or email to the Waterfield Service Desk, fulfilled by Waterfield with communications occurring within our ticketing system.
- MACD is defined as not requiring multiple resources or coordination with external vendors or parties, can be completed in less than 2 hours per engagement and does not require Project Management or Coordination.

- Waterfield will utilize a proven change control process for managing changes requested under this program.
- Complex requests requiring PMO management, 3rd party support coordination, multiples phases or that support net new functionality, integrations or capabilities will be quoted as new project work through the Waterfield account team.

Forward Planning

Waterfield will make expert resources available to participate in your forward planning or strategic steering committee meetings at your request. We can add significant value to your planning process by relaying best practices and current technology trends employed by other Waterfield customers.

- Waterfield will conduct a formal review of consulting hours usage
- Waterfield will conduct an annual application and system review to align with the current Customer budget cycle:
    - Review system architecture for adequate capacity/redundancy
    - Review Service Desk engagements over the past year; identify areas for improvement
- Waterfield will work with the Customer to identify the architectural, application, and operational improvement opportunities to help Customer further exploit its technology and application investment. The actual implementation or execution of these opportunities will be handled under separate SOWs or this agreement's Application Changes and Improvements provision if adequate hours are available.
- If desired, Waterfield will assist Customer with planning and scoping future budgeting cycles.

ADAPTABILITY TO CHANGING BUSINESS & TECHNICAL NEEDS
Waterfield will schedule a run-rate review with Customer after six months of activity. The objective of this review will be to validate the Customer bundled-hours budget and adjust if necessary. Should Customer and Waterfield determine that additional bundled hours are needed, Waterfield will submit a Project Change Request for Customer's approval.

SEVERITY DEFINITIONS AND RESPONSE SLA:

LEVEL	DEFINITION	SERVICE LEVEL AGREEMENT RESPONSE TIMES
Priority 1	Service interruption affecting whole site or network, mission critical server or service, or critical application on a managed server	Within one (1) hour
Priority 2	Service interruption affecting small number of users, or service degradation affecting many users (large office or multiple small offices)	Within four (4) hours
Priority 3	Service interruption affecting a single user, or service; degradation affecting a few users	Within one (1) business day
Priority 4	Informational & General requests, MACD requests.	Within one (1) week

Customer acknowledges that incidents caused by system hardware or software may require third-party manufacturer involvement. Waterfield is not liable for system hardware or software failures or delays in receiving system software bug fixes, patches, maintenance releases, upgrades, or new versions

COVERAGE EXCLUSIONS

- Active system issues present at time of contract start date.
    - Prior to contract start date, Waterfield will perform remote and/or onsite system audits to validate the health and integrity of the systems being placed under coverage including the system environment.
    - Significant issues that may interfere with the supportability of the systems under coverage found existing during this audit will be documented and communicated to customer with quote for resolution on a Time and Materials basis if feasible.
    - Should customer elect not to remediate these issues via Waterfield or other means, Waterfield reserves the right to deny support coverage that is related to these unresolved issues.
- Customer provided hardware failures or issues: If Waterfield is required to perform support activities to restore or reload a supported application due to customer provide physical or virtual server failure, Waterfield reserves the right to bill for such activity on a Time and Materials basis.
- For all customer provided elements of the infrastructure including VMware/compute/OS or other CPE, customer is responsible for all support, patching, remediation and collaboration with Waterfield on Incident resolution that may be dependent on remediations to such infrastructure.
- Labor and material costs for configuration or programming changes, the addition of equipment or relocation of same. This activity is considered Move, Add, and Change activity (MAC) and can be provided at our then current Time and Material rates, or pre-paid under Block of Hours purchase, or included as optional under Waterfield's Enhanced Signature Support offerings.
- Battery back-up systems, DC rectifiers, uninterruptible power supply systems (UPS), operating supplies, electrical work external to the system.
- Labor and material costs for Assets that do not affect the normal operation of the system (i.e. Cabinets, racks, shelves, etc.).
- Force Majeure: Any act external to the system that causes, directly or indirectly, a system failure, either immediately or later, or other malfunction including without any limitation, failures of trunk or toll lines from local dial tone providers or long distance carriers, other equipment connected to the system, or abnormal environmental conditions, power failures or fluctuations, (for example power fluctuations caused by power surge or lightning), flooding, water damage, and any other equipment damage associated with Acts of God
- The negligent, intentional, or willful acts of customer or third parties, or any acts or events which may adversely affect the performance of the system, occasioned by acts of Customer, or any third party.
- If customer requires escorted (customer monitored) remote access to systems, SLA's do not apply.

Customer Responsibilities

- Customer agrees to perform in a timely manner, at Customer's sole expense, the following responsibilities in support of Waterfield Services under this Agreement:
    - Unless otherwise stated in an executed Signature Support agreement, customer to provide physical or virtual server to support Waterfield remote monitoring platform per provided specifications at core location.
    - For legacy systems supported by modem, customer to provide modem unless purchased under this Signature Support quote.
- If deploying on customer provided virtual environment, Waterfield strongly recommends the monitoring server to be deployed on a separate physical host from those hosting applications being monitored to ensure survivability of the monitoring server if there is a failure of the main telephony host.
- For products where manufacturer is not procured through Waterfield, if escalation to manufacturer is required, Waterfield will refer escalation to Customer for engagement under their support contract with manufacturer. Waterfield will participate in ongoing troubleshooting as required with the manufacturer to facilitate remediation.
- Waterfield persistent remote access to the environment is required under this contract and provided via the Waterfield Monitoring server or legacy modem described above. If customer declines to deploy the monitoring server or modem for remote monitoring, persistent remote access via VPN or other means must be provided for Waterfield to support the systems under Signature Support.
- Provide access to Customer's premises and a suitable work area for Waterfield service personnel.
- Appoint an administrator (the "Contact") knowledgeable in Customer operational requirements as a point of contact to Waterfield and with authority to act on Customer's behalf in matters relating to this agreement, including the issuance of purchase orders.

- Provide the proper environment, electrical and telecommunications connections as specified by the system's manufacturer(s).
- Maintain back-up files and discs for all relevant software comprising a portion of or being related to the system.
- Not relocate or modify any portion of the system or its Assets or allow anyone access to the internal Assets and software without written notification to Waterfield.

Terms and Cancelation

Renewal
At the conclusion of the term specified in this contract, this Service Schedule shall automatically renew for successive one (1) year terms at Waterfield's current rates at time of renewal of the Services Schedule, unless non-renewal notice is provided in writing sixty (60) days prior to the renewal date as defined in this contract.
Previous term unused Bundled Hours allotments are not available for credit or extension into renewal term.

Cancellation of Support
Customer may cancel the Waterfield support portion at any time, with or without cause, provided a 60-day written advanced notice is provided to Waterfield by an authorized signatory. No credits for prepayments will be provided. If notice of cancellation is provided mid-term, 50% of the remaining unpaid Waterfield Signature Support balance of the full contracted term will be due immediately upon termination. Cancellation penalties are waived if service is moving to another Waterfield provided solution or service.
The cancellation of Manufacturer Support Agreements will follow the manufacturers' cancellation policy in effect during the term of this agreement. Current policy terms from the manufacturer are available from Waterfield upon request.

Resale of Manufacturer Support
If this agreement contains the resale of Manufacturer Support provided by the OEM to support their products and services, such Manufacturer Support is provided independently of any Waterfield support quoted herein. Waterfield holds no performance obligation over the delivery of this Manufacturer Support which is bound by the prevailing terms and conditions set by the OEM at time of sale.

PROPOSAL

ALTURA communication solutions
A Waterfield company

CONSULTING | CONTACT CENTER | COLLABORATION | NETWORK | SECURITY | MANAGED SERVICES

2026 Bundled Support - 2 Year Term

Prepared by:

Altura Communications Solutions

Mary Grace Crisci
(714) 948-8450
marygrace.crisci@waterfield.com

Prepared for:

CITY OF SANTA FE

P.O. Box 909
SANTA FE, New Mexico 87504
Edward Romero
(505) 955-5567
ehromero@santafenm.gov

Quote Information:

Quote #: 045516

Version: 3
Delivery Date: 10/29/2025
Expiration Date: 12/19/2025

Avaya License Activation Fee

Description		Price	Qty	Ext. Price
WTPSO-45516	**Subscription License Activation Service - Remote Conversion During Brief OT Event**	**$2,405.00**	**1**	**$2,405.00**
INVOICE SCHEDULE: Other One-Time Fees				

Subtotal: **$2,405.00**

911 Secure Support - 12/18/2025-12/17/2026

Description		Recurring	Qty	Ext. Recurring
Software Support				
911S-SENT-2-AS	**Sentry E911 Sentinel - Software Only - 1,001-2,500 Endpoints**	$995.00	1	$995.00
Annual renewable support fee which includes access to telephone technical support to correct problems. Technical Support staff is available Monday through Friday 9am to 5pm ET. Refer to "911S-ENG-PROSERV-PP" for pre-paid hours included in this proposal. For after hours/weekend and holiday support please refer to "911S-ENG-PROSERV-OHS". Also includes Annual Software Update Service.				
911S-SCOUT-AURA-AS	**Sentry E911 Scout for Avaya Aura CM/AES/Session Manager**	$325.00	1	$325.00
Annual renewable support fee which includes access to telephone technical support to correct problems. Technical Support staff is available Monday through Friday 9am to 5pm ET. Refer to "911S-ENG-PROSERV-PP" for pre-paid hours included in this proposal. For after hours/weekend and holiday support please refer to "911S-ENG-PROSERV-OHS". Also includes Annual Software Update Service.				
911S-TRACK-AS	**Sentry E911 Internal Tracker, External Tracker, MacLocations Tracker**	$325.00	1	$325.00
Annual renewable support fee which includes access to telephone technical support to correct problems. Technical Support staff is available Monday through Friday 9am to 5pm ET. Refer to "911S-ENG-PROSERV-PP" for pre-paid hours included in this proposal. For after hours/weekend and holiday support please refer to				

911 Secure Support - 12/18/2025-12/17/2026

Description	Recurring	Qty	Ext. Recurring
"911S-ENG-PROSERV-OHS". Also includes Annual Software Update Service.			
911S-W-TRACK-AS **Sentry Wireless Tracker**	$995.00	1	$995.00
Annual renewable support fee which includes access to telephone technical support to correct problems. Technical Support staff is available Monday through Friday 9am to 5pm ET. Refer to "911S-ENG-PROSERV-PP" for pre-paid hours included in this proposal. For after hours/weekend and holiday support please refer to "911S-ENG-PROSERV-OHS". Also includes Annual Software Update Service.			
911S-BEACON-AS **Sentry E911 Beacon**	$20.00	100	$2,000.00
Annual renewable support fee which includes access to telephone technical support to correct problems. Technical Support staff is available Monday through Friday 9am to 5pm ET. Refer to "911S-ENG-PROSERV-PP" for pre-paid hours included in this proposal. For after hours/weekend and holiday support please refer to "911S-ENG-PROSERV-OHS". Also includes Annual Software Update Service.			
911S-BEACON-ND-100-A **Sentry Beacon with ERL/ELE Filtering and 100 Notification Domains**	$1,795.00	1	$1,795.00
Annual renewable support fee which includes access to telephone technical support to correct problems. Technical Support staff is available Monday through Friday 9am to 5pm ET. Refer to "911S-ENG-PROSERV-PP" for pre-paid hours included in this proposal. For after hours/weekend and holiday support please refer to "911S-ENG-PROSERV-OHS". Also includes Annual Software Update Service.			
911S-EP-LICENSING-5- **Sentry End Point Licensing (1-5,000 Endpoints)**	$1.25	1500	$1,875.00
Annual renewable support fee which includes access to telephone technical support to correct problems. Technical Support staff is available Monday through Friday 9am to 5pm ET. Refer to "911S-ENG-PROSERV-PP" for pre-paid hours included in this proposal. For after hours/weekend and holiday support please refer to "911S-ENG-PROSERV-OHS". Also includes Annual Software Update Service.			
911S-SENTRY-DIS-AS **Sentry Cloud and Sentry Gatekeeper**	$1,995.00	1	$1,995.00
Annual renewable support fee which includes access to telephone technical support to correct problems. Technical Support staff is available Monday through Friday 9am to 5pm ET. Refer to "911S-ENG-PROSERV-PP" for pre-paid hours included in this proposal. For after hours/weekend and holiday support please refer to "911S-ENG-PROSERV-OHS". Also includes Annual Software Update Service.			

PROPOSAL

ALTURA communication solutions
A Waterfield company

CONSULTING | CONTACT CENTER | COLLABORATION | NETWORK | SECURITY | MANAGED SERVICES

911 Secure Support - 12/18/2025-12/17/2026

Description		Recurring	Qty	Ext. Recurring
911S-ENG-PROSERV	**Engineering Assistance and Professional Services**	$200.00	10	$2,000.00
Pre-Paid support hours included per year to access 911 Secure's technical support staff. 911 Secure's technical support is available Monday-Friday 9am to 5pm ET for telephone and remote assistance to correct problems. For Off Hours Support please refer to "Off Hours Support". Once the pre-purchased hours have been used additional hours must be purchased in advanced before additional support will be given unless 911 Secure deems the Technical Support is Urgent then an exception will be made by the 911 Secure support staff to assist client. These additional hours will be billed at the "Off Hours Support" rate. After each support issue is completed the client will be notified via email how many hours were used and their remaining balance. It is suggested that once the client has either less than 10% of the pre-purchased hours remaining or one hour or less remaining additional hours should be purchased.				
SENTRY VPC - 911 Routing Subscription Services				
911S-VPC-MRC-AM250	**Annual Fee (Includes first 141 Records)**	$3,000.00	1	$3,000.00
Service includes bundle or singular DID MAC upload, ongoing near, real-time updating and uploading of location position, address validation, emergency routing service.				
911S-ECRC-1	**Annual Emergency Call Response Center - 1,000+ Endpoints**	$1,000.00	1	$1,000.00
All calls that are routed to the ECRC are charged at a rate of $75 per call. 20 calls per year are included for annual charge of $1,000. For each call over 20 the $75 per call fee will apply. Auto-renewed. Invoiced 90 days prior to anniversary date. *NOTE: This only applies to calls that originate from endpoints that are not provisioned in the 911 Secure VPC database.*				
SENTRY MONTHLY RECURRING CHARGES PER ZONE CHARGE - 12 Months Paid Up Front				
911S-NG911AD-ARC	**Sentry NG911 Additional Data Powered by RapidSOS**	$60.00	66	$3,960.00
Provides for NG911 Additional Data to be sent to the RapidSOS Clearinghouse. The Public Safety Answer Point (PSAP) will be able to retrieve the Additional Data from the RapidSOS Clearinghouse.				
INVOICE SCHEDULE: Manufacturer Maintenance / Subscription				
Gross Receipts Tax	**Estimated Tax Rate: 8.1875%**	$1,659.20	1	$1,659.20

Annual Subtotal: **$21,924.20**

911 Secure Support - 12/18/2026-12/17/2027

Description		Recurring	Qty	Ext. Recurring
Software Support				
911S-SENT-2-AS	**Sentry E911 Sentinel - Software Only - 1,001-2,500 Endpoints**	$995.00	1	$995.00

911 Secure Support - 12/18/2026-12/17/2027

Description	Recurring	Qty	Ext. Recurring
Annual renewable support fee which includes access to telephone technical support to correct problems. Technical Support staff is available Monday through Friday 9am to 5pm ET. Refer to "911S-ENG-PROSERV-PP" for pre-paid hours included in this proposal. For after hours/weekend and holiday support please refer to "911S-ENG-PROSERV-OHS". Also includes Annual Software Update Service.			
911S-SCOUT-AURA-AS **Sentry E911 Scout for Avaya Aura CM/AES/Session Manager**	$325.00	1	$325.00
Annual renewable support fee which includes access to telephone technical support to correct problems. Technical Support staff is available Monday through Friday 9am to 5pm ET. Refer to "911S-ENG-PROSERV-PP" for pre-paid hours included in this proposal. For after hours/weekend and holiday support please refer to "911S-ENG-PROSERV-OHS". Also includes Annual Software Update Service.			
911S-TRACK-AS **Sentry E911 Internal Tracker, External Tracker, MacLocations Tracker**	$325.00	1	$325.00
Annual renewable support fee which includes access to telephone technical support to correct problems. Technical Support staff is available Monday through Friday 9am to 5pm ET. Refer to "911S-ENG-PROSERV-PP" for pre-paid hours included in this proposal. For after hours/weekend and holiday support please refer to "911S-ENG-PROSERV-OHS". Also includes Annual Software Update Service.			
911S-W-TRACK-AS **Sentry Wireless Tracker**	$995.00	1	$995.00
Annual renewable support fee which includes access to telephone technical support to correct problems. Technical Support staff is available Monday through Friday 9am to 5pm ET. Refer to "911S-ENG-PROSERV-PP" for pre-paid hours included in this proposal. For after hours/weekend and holiday support please refer to "911S-ENG-PROSERV-OHS". Also includes Annual Software Update Service.			
911S-BEACON-AS **Sentry E911 Beacon**	$20.00	100	$2,000.00
Annual renewable support fee which includes access to telephone technical support to correct problems. Technical Support staff is available Monday through Friday 9am to 5pm ET. Refer to "911S-ENG-PROSERV-PP" for pre-paid hours included in this proposal. For after hours/weekend and holiday support please refer to "911S-ENG-PROSERV-OHS". Also includes Annual Software Update Service.			
911S-BEACON-ND-100-A **Sentry Beacon with ERL/ELE Filtering and 100 Notification Domains**	$1,795.00	1	$1,795.00
Annual renewable support fee which includes access to telephone technical support to correct problems. Technical Support staff is available Monday through Friday 9am to 5pm ET. Refer to "911S-ENG-PROSERV-PP" for pre-paid hours included in this proposal. For after hours/weekend and holiday support please refer to "911S-ENG-PROSERV-OHS". Also includes Annual Software Update Service.			

911 Secure Support - 12/18/2026-12/17/2027

Description		Recurring	Qty	Ext. Recurring
911S-EP-LICENSING-5-	**Sentry End Point Licensing (1-5,000 Endpoints)**	$1.25	1500	$1,875.00
Annual renewable support fee which includes access to telephone technical support to correct problems. Technical Support staff is available Monday through Friday 9am to 5pm ET. Refer to "911S-ENG-PROSERV-PP" for pre-paid hours included in this proposal. For after hours/weekend and holiday support please refer to "911S-ENG-PROSERV-OHS". Also includes Annual Software Update Service.				
911S-SENTRY-DIS-AS	**Sentry Cloud and Sentry Gatekeeper**	$1,995.00	1	$1,995.00
Annual renewable support fee which includes access to telephone technical support to correct problems. Technical Support staff is available Monday through Friday 9am to 5pm ET. Refer to "911S-ENG-PROSERV-PP" for pre-paid hours included in this proposal. For after hours/weekend and holiday support please refer to "911S-ENG-PROSERV-OHS". Also includes Annual Software Update Service.				
911S-ENG-PROSERV	**Engineering Assistance and Professional Services**	$200.00	10	$2,000.00
Pre-Paid support hours included per year to access 911 Secure's technical support staff. 911 Secure's technical support is available Monday-Friday 9am to 5pm ET for telephone and remote assistance to correct problems. For Off Hours Support please refer to "Off Hours Support". Once the pre-purchased hours have been used additional hours must be purchased in advanced before additional support will be given unless 911 Secure deems the Technical Support is Urgent then an exception will be made by the 911 Secure support staff to assist client. These additional hours will be billed at the "Off Hours Support" rate. After each support issue is completed the client will be notified via email how many hours were used and their remaining balance. It is suggested that once the client has either less than 10% of the pre-purchased hours remaining or one hour or less remaining additional hours should be purchased.				
SENTRY VPC - 911 Routing Subscription Services				
911S-VPC-MRC-AM250	**Annual Fee (Includes first 141 Records)**	$3,000.00	1	$3,000.00
Service includes bundle or singular DID MAC upload, ongoing near, real-time updating and uploading of location position, address validation, emergency routing service.				
911S-ECRC-1	**Annual Emergency Call Response Center - 1,000+ Endpoints**	$1,000.00	1	$1,000.00
All calls that are routed to the ECRC are charged at a rate of $75 per call. 20 calls per year are included for annual charge of $1,000. For each call over 20 the $75 per call fee will apply. Auto-renewed. Invoiced 90 days prior to anniversary date. *NOTE: This only applies to calls that originate from endpoints that are not provisioned in the 911 Secure VPC database.*				
SENTRY MONTHLY RECURRING CHARGES PER ZONE CHARGE - 12 Months Paid Up Front				
911S-NG911AD-ARC	**Sentry NG911 Additional Data Powered by RapidSOS**	$60.00	66	$3,960.00

911 Secure Support - 12/18/2026-12/17/2027

Description		Recurring	Qty	Ext. Recurring
Provides for NG911 Additional Data to be sent to the RapidSOS Clearinghouse. The Public Safety Answer Point (PSAP) will be able to retrieve the Additional Data from the RapidSOS Clearinghouse.				
INVOICE SCHEDULE: Manufacturer Maintenance / Subscription				
Gross Receipts Tax	**Estimated Tax Rate: 8.1875%**	$1,659.20	1	$1,659.20

Annual Subtotal: **$21,924.20**

Computer Instruments Support - 12/21/2025-12/20/2026

Description		Recurring	Qty	Ext. Recurring
1800-0800	**Total Care Maintenance, 8-5, M-F**	$6,026.00	1	$6,026.00
INVOICE SCHEDULE: Manufacturer Maintenance / Subscription				
Gross Receipts Tax	**Estimated Tax Rate: 8.1875%**	$629.23	1	$629.23

Annual Subtotal: **$6,655.23**

Computer Instruments Support - 12/21/2026-12/20/2027

Description		Recurring	Qty	Ext. Recurring
1800-0800	**Total Care Maintenance, 8-5, M-F**	$6,026.00	1	$6,026.00
INVOICE SCHEDULE: Manufacturer Maintenance / Subscription				
Gross Receipts Tax	**Estimated Tax Rate: 8.1875%**	$629.23	1	$629.23

Annual Subtotal: **$6,655.23**

OpenText Support - 12/22/2025-12/21/2026

Description		Recurring	Qty	Ext. Recurring
GSA Contract Number - GSA - 74QTCA19D007R				
Unique #: 71244-12786 Unique Name: 1474823111006 ASP Support				
1000052324	**CX-E - 32 Ports/5 UM/5 PA/1 Call Server Maintenance**	$4,898.65	1	$4,898.65
1000052478	**1000 UM User licenses Maintenance**	$2,671.90	1	$2,671.90

OpenText Support - 12/22/2025-12/21/2026

Description		Recurring	Qty	Ext. Recurring
1000053327	**XMedius CX-E/Hospitality Prime Protect**	$484.10	1	$484.10
1000052440	**SIP Port (All SIP integrations) - Per Port Maintenance**	$23.00	32	$736.00
1000052492	**Alternate TUI Emulations Maintenance**	$445.30	1	$445.30
1000052444	**1 Speech resource (ASR and TTS) License (add additional ports up to 500 Speech resources) Maintenance**	$144.00	3	$432.00
1000052442	**Additional Call Server (maximum 20 Call Servers total per CX-E system with 8.1 and higher) Maintenance**	$223.25	1	$223.25
1000054469	**Fax Telephony Gateway Maintenance**	$155.90	1	$155.90
1000052414	**Avaya Communication Manager SIP (Includes SIP trunk for CM/SM, and SIP station for SM integration) Maintenance**	$118.10	1	$118.10
INVOICE SCHEDULD: Manufacture Maintenance / Subscription				
Gross Receipts Tax	**Estimated Tax Rate: 8.1875%**	$832.28	1	$832.28

Annual Subtotal: **$10,997.48**

OpenText Support - 12/22/2026-12/21/2027

Description		Recurring	Qty	Ext. Recurring
GSA Contract Number - GSA - 74QTCA19D007R				
Unique #: 71244-12786 Unique Name: 1474823111006 ASP Support				
1000052324	**CX-E - 32 Ports/5 UM/5 PA/1 Call Server Maintenance**	$5,143.55	1	$5,143.55
1000052478	**1000 UM User licenses Maintenance**	$2,805.55	1	$2,805.55
1000053327	**XMedius CX-E/Hospitality Prime Protect**	$507.25	1	$507.25
1000052440	**SIP Port (All SIP integrations) - Per Port Maintenance**	$24.15	32	$772.80
1000052492	**Alternate TUI Emulations Maintenance**	$467.60	1	$467.60
1000052444	**1 Speech resource (ASR and TTS) License (add additional ports up to 500 Speech resources) Maintenance**	$144.00	3	$432.00
1000052442	**Additional Call Server (maximum 20 Call Servers total per CX-E system with 8.1 and higher) Maintenance**	$223.25	1	$223.25

OpenText Support - 12/22/2026-12/21/2027

Description		Recurring	Qty	Ext. Recurring
1000054469	**Fax Telephony Gateway Maintenance**	$163.70	1	$163.70
1000052414	**Avaya Communication Manager SIP (Includes SIP trunk for CM/SM, and SIP station for SM integration) Maintenance**	$124.00	1	$124.00
INVOICE SCHEDULD: Manufacture Maintenance / Subscription				
Gross Receipts Tax	**Estimated Tax Rate: 8.1875%**	$871.13	1	$871.13

Annual Subtotal: **$11,510.83**

Avaya Subscription - 12/31/2025-12/30/2026

Description		Recurring	Qty	Ext. Recurring
GSA Contract Number - Avaya GS-35F-0156V				
3273321 CITY OF SANTA FE/CITY HALL, 200 LINCOLN AVE, SANTA FE, NM, US, 87501-1904				
284959	**Avaya Support Advantage Preferred - Service - 24 x 7 - Technical - Electronic, Physical**	$0.00	1	$0.00
284960	**Avaya Upgrade Advantage - Service - Technical - Electronic**	$0.00	1	$0.00
434845	**UC ESSENTIALS LICENSE FIXED SUBS ADJ LP**	$22.00	100	$2,200.00
GSA Price $5.54 - Annual Price $66.48				
433924	**AES BASIC TSAPI ENTL LIC FXD SUBS ADJLP**	$0.00	100	$0.00
405787	**CC BASIC VOICE LICENSE FIXED SUBS, SUBSCRIPTION FIXED USAGE**	$267.85	92	$24,642.20
GSA Price $58.52 - Annual Price $702.24				
434846	**UC ADVANCED LICENSE FIXED SUBS ADJ LP**	$32.35	1700	$54,995.00
GSA Price $8.20 - Annual price $98.40				
433926	**AES DMCC ENTL LIC FXD SUBS ADJLP**	$0.00	100	$0.00
407011	**CC WE ACRA REC PKG LIC FIXED SUBS 1YR AN PREPD, PRODUCT SUBSCRIPTION**	$319.20	70	$22,344.00
GSA Price $26.60 - Annual Price $319.20				
351498	**SUBCRIPTION SA SUPPORT CC WE ACRA RECORDING PKG TRACKING, SA SS SSU CONTRACT**	$0.00	84	$0.00

Avaya Subscription - 12/31/2025-12/30/2026

Description		Recurring	Qty	Ext. Recurring
296288	**SA PREFER SUPT WFO R15 LICENSE MOVE TRACKING, SA SS SSU CONTRACT**	$0.00	1	$0.00
INVOICE SCHEDULE: Manufacture Maintenance / Subscription				
Gross Receipts Tax	**Estimated Tax Rate: 8.1875%**	$8,529.84	1	$8,529.84

Annual Subtotal: **$112,711.04**

Avaya Subscription - 12/31/2026-12/30/2027

Description		Recurring	Qty	Ext. Recurring
GSA Contract Number - Avaya GS-35F-0156V				
3273321 CITY OF SANTA FE/CITY HALL, 200 LINCOLN AVE, SANTA FE, NM, US, 87501-1904				
284959	**Avaya Support Advantage Preferred - Service - 24 x 7 - Technical - Electronic, Physical**	$0.00	1	$0.00
284960	**Avaya Upgrade Advantage - Service - Technical - Electronic**	$0.00	1	$0.00
434845	**UC ESSENTIALS LICENSE FIXED SUBS ADJ LP**	$22.00	100	$2,200.00
GSA Price $5.54 - Annual Price $66.48				
433924	**AES BASIC TSAPI ENTL LIC FXD SUBS ADJLP**	$0.00	100	$0.00
405787	**CC BASIC VOICE LICENSE FIXED SUBS, SUBSCRIPTION FIXED USAGE**	$267.85	92	$24,642.20
GSA Price $58.52 - Annual Price $702.24				
434846	**UC ADVANCED LICENSE FIXED SUBS ADJ LP**	$32.35	1700	$54,995.00
GSA Price $8.20 - Annual price $98.40				
433926	**AES DMCC ENTL LIC FXD SUBS ADJLP**	$0.00	100	$0.00
407011	**CC WE ACRA REC PKG LIC FIXED SUBS 1YR AN PREPD, PRODUCT SUBSCRIPTION**	$319.20	70	$22,344.00
GSA Price $26.60 - Annual Price $319.20				
351498	**SUBCRIPTION SA SUPPORT CC WE ACRA RECORDING PKG TRACKING, SA SS SSU CONTRACT**	$0.00	84	$0.00
296288	**SA PREFER SUPT WFO R15 LICENSE MOVE TRACKING, SA SS SSU CONTRACT**	$0.00	1	$0.00

Avaya Subscription - 12/31/2026-12/30/2027

Description		Recurring	Qty	Ext. Recurring
INVOICE SCHEDULE: Manufacture Maintenance / Subscription				
Gross Receipts Tax	**Estimated Tax Rate: 8.1875%**	$8,529.84	1	$8,529.84

Annual Subtotal: **$112,711.04**

Signature Support - 12/31/2025-12/30/2026

Description		Recurring	Qty	Ext. Recurring
GSA Contract Number - GS-35F-0666W				
54151S	**Special Item Number 54151S IT Professional Services**	**$47,913.00**	**1**	**$47,913.00**
INVOICE SCHEDULE: Signature Support Services				
Gross Receipts Tax	**Estimated Tax Rate: 8.1875%**	$3,922.88	1	$3,922.88
SIN 54151S Resources Utilized in Support Contact Center Solutions Engineer Network Engineer Tier 2 NOC Help Desk				

Annual Subtotal: **$51,835.88**

Signature Support - 12/31/2026-12/30/2027

Description		Recurring	Qty	Ext. Recurring
GSA Contract Number - GS-35F-0666W				
54151S	**Special Item Number 54151S IT Professional Services**	**$47,913.00**	**1**	**$47,913.00**
INVOICE SCHEDULE: Signature Support Services				
Gross Receipts Tax	**Estimated Tax Rate: 8.1875%**	$3,922.88	1	$3,922.88

PROPOSAL

ALTURA communication solutions
A Waterfield company

CONSULTING | CONTACT CENTER | COLLABORATION | NETWORK | SECURITY | MANAGED SERVICES

Signature Support - 12/31/2026-12/30/2027

Description	Recurring	Qty	Ext. Recurring
SIN 54151S			
Resources Utilized in Support			
Contact Center Solutions Engineer			
Network Engineer Tier 2 NOC			
Help Desk			

Annual Subtotal: **$51,835.88**

Quote Summary

Description	Recurring	One-Time
Avaya License Activation Fee	$0.00	$2,405.00
911 Secure Support - 12/18/2025-12/17/2026	$21,924.20	$0.00
911 Secure Support - 12/18/2026-12/17/2027	$21,924.20	$0.00
Computer Instruments Support - 12/21/2025-12/20/2026	$6,655.23	$0.00
Computer Instruments Support - 12/21/2026-12/20/2027	$6,655.23	$0.00
OpenText Support - 12/22/2025-12/21/2026	$10,997.48	$0.00
OpenText Support - 12/22/2026-12/21/2027	$11,510.83	$0.00
Avaya Subscription - 12/31/2025-12/30/2026	$112,711.04	$0.00
Avaya Subscription - 12/31/2026-12/30/2027	$112,711.04	$0.00
Signature Support - 12/31/2025-12/30/2026	$51,835.88	$0.00
Signature Support - 12/31/2026-12/30/2027	$51,835.88	$0.00
Total:	$408,761.01	$2,405.00
Project Total:		$411,166.01

INVOICING SCHEDULE & PAYMENT TERMS

Invoicing Schedule

Fee Type	Trigger To Start Invoicing	Invoicing Method
Recurring Fees (by Category)		
CC/UC Agent Seats and Bundles	Earlier of a) first production use of the CC/UC service, or b) the start of the Dates of Performance.	Annual in Advance
CC/UC Feature Add-ons	Earlier of a) date that each ordered service is first made available for production use, or b) ninety (90) days after Effective Date.	Annual in Advance
Other Software Services		Annual in Advance
Manufacturer Maintenance/Subscription	• **New: License Issuance or Shipment Date** • **Existing: Service Order Date** ***Subject to change based on manufacturer policy and actual maintenance subscription dates.***	**Annual in Advance**
Signature Support Services	• **New Project: Earlier of a) first production use of the CC/UC service, or b) the start of the Dates of Performance.** • **Renewal: Service Order Date**	**Annual in Advance**
Ascend Support Services	• New Project: Earlier of a) first production use of the CC/UC service, or b) the start of the Dates of Performance. • Renewal: Service Order Date	Annual in Advance
One-Time Fees & Deposits		
Professional Services Fees	Service Order Date	Unless otherwise stated above, 50% upon Effective Date; 50% upon Final Completion
Block of Hours	Service Order Date	100% in advance
Hardware/Equipment Purchases	Order Size: • Greater than $100k: Service Order Date • Less than $100k: Shipment Date	Order Size: • Greater than $100k: 50% due upon Receipt of Invoice; 50% upon Shipment • Less than $100k: 100% upon Shipment
Software Licenses	License Issuance or Shipment Date	100% upon License Issuance
Other One-Time Fees	**Service Order Date**	**100% in advance**
Usage Fees		
Communications	As Used	Monthly in Arrears
Storage	As Used	Monthly in Arrears
Other Usage-Based Fees	As Used	Monthly in Arrears

Payment Terms

INVOICING SCHEDULE & PAYMENT TERMS

Payment for all invoices is due within thirty (30) calendar days from the invoice date. Invoices will be delivered to the Customer via email. Any payment not received by the due date will be considered overdue. Overdue payments may be subject to a late fee of 1.5% per month (or the maximum rate permitted by law, whichever is lower) until paid in full. Waterfield reserves the right to suspend services in the event of non-payment beyond sixty (60) days.

If there are any disputes or discrepancies with an invoice, Customer must notify Waterfield in writing within ten (10) business days of receipt of the invoice. Both parties agree to work in good faith to resolve any billing issues promptly.

Payments can be made via electronic funds transfer (EFT), which includes Automated Clearing House (ACH) or wire transfers, or for an additional fee, via check or credit card. The additional fee is the larger of $500 or 5% of the amount. All payments must be made in U.S. Dollars (USD).

Any adjustments to the subscription fees due to changes in service levels, usage, or other factors will be reflected in the subsequent billing cycle. Credits for service outages or other issues will be applied to future invoices.

Expenses

The prices quoted above do not include travel or related expenses. Any on-site presence required for the project, along with travel expenses such as airfare, hotel accommodations, local transportation, and meals, will be billed separately at cost to the Customer, provided these expenses are approved in advance by the Customer.

In addition, any other Customer-approved expenses directly attributable to supporting the project will be billed at cost. This includes, but is not limited to, fees for facility usage such as usability testing and recording studios, as well as the acquisition of any specialized hardware or software necessary for the development and testing of the application(s).

All travel and related expenses must receive prior written approval from the Customer before being incurred. Detailed receipts and documentation for all expenses will be provided with the invoice. The Customer reserves the right to request additional documentation or clarification regarding any billed expenses.

Expenses will be billed monthly and included in the invoice for the period in which they were incurred. Any disputed expenses must be raised in writing within fifteen (15) days of receipt of the invoice.

To ensure cost control, the Waterfield will make reasonable efforts to minimize travel and other expenses, and to use cost-effective options where possible.

Taxes, Shipping, Handling & Duties

All prices quoted in this SOW include estimated taxes. Excluded and not included in the price is shipping, handling, and duty charges. Applicable taxes, including but not limited to sales, use, value-added, or other taxes, will be added to the invoice at the time of billing and are the responsibility of the Customer. Shipping, handling, and duty charges, if applicable, will also be invoiced at cost.

Company will include detailed line items for any taxes, shipping, handling, and duty charges on the invoice. The Customer is responsible for providing any applicable tax exemption certificates to Company prior to the issuance of the invoice.

Altura Communications Solutions

Signature: _____

Name: _____

Title: _____

Date: _____

CITY OF SANTA FE

Signature: _____

Name: _____

Title: _____

Date: _____

Item# 22-0586
Munis Contract# 3201719

CITY OF SANTA FE
AMENDMENT No. 1 TO
Altura Communications Solutions Agreement
ITEM# 20-0041

This Amendment No. 1 (the "Amendment") amends the CITY OF SANTA FE Altura Communications Solutions Agreement dated December 31, 2019 (the "Agreement"), between the City of Santa Fe (the "City") and Altura Communications Solutions. (the "Contractor"). The date of this Amendment shall be the date when it is executed by the City and the Contractor whichever occurs last.

RECITALS:

A. Under the terms of the Agreement, Contractor has agreed to provide the Avaya Maintenance and Support Service 12/31/2022-12/31/2025.

B. Pursuant to Article 8 of the Agreement, and for good and valuable consideration, the receipt and sufficiency of which are acknowledged by the parties, the City and the Contractor agree as follows:

1. SCOPE OF SERVICES

Article 2 of the Agreement is amended to provide the Avaya Maintenance and Support Service 12/31/2022-12/31/2025, so that Article 2 reads as follows:

2) Altura shall provide the products, maintenance and support as stated in Schedule 1 Quote and Support Details as described in Exhibit B attached hereto.

2. COMPENSATION.

Article 3, paragraph A of the Agreement is amended to increase the amount of

compensation by a total of Five Hundred Thirty-Nine Thousand, One Hundred Forty-Two Dollars and Ninety-Six Cents ($539,142.96), so that Article 3, paragraph A reads in its entirety as follows:

The total compensation under this Amendment no. 1 is $583,959.21 including gross receipts tax. The breakdown per year is $194,653.07 including New Mexico gross receipts tax. The total compensation of this agreement shall not exceed $827,600.07.

- Compensation paid 12/31/2019-12/31/2022 $243,640.86
- Compensation to be paid 12/31/2022-12/31/2025 $583,959.21 ($194,653.07 per year)

3. TERM:

Article 5 of the Agreement is hereby deleted in its entirety and substitute the following Article 5 in its place:

THIS AGREEMENT SHALL NOT BECOME EFFECTIVE UNTIL APPROVED IN WRITING BY THE CITY. This Agreement shall begin on date approved by the City, and end on **12/31/2025.** The City reserves the right to renew the contract on an annual basis by mutual Agreement not exceed a total of four years in accordance with NMSA 1978, §§ 13-1-150 through 152.

4. AGREEMENT IN FULL FORCE.

Except as specifically provided in this Amendment, the Agreement remains and shall remain in full force and effect, in accordance with its terms.

IN WITNESS WHEREOF, the parties have executed this Amendment No. 1 to the Agreement as of the dates set forth below.

CITY OF SANTA FE:

ALAN WEBBER, CITY MAYOR

DATE: Dec 15, 2022

CONTRACTOR:
Tom Pickford

Tom Pickford
NAME

Vice President, Sales
TITLE

DATE: 11/1/2022
CRS#

Registration #

ATTEST:

Kristine Mihelcic (Dec 16, 2022 12:17 MST)

KRISTINE BUSTOS MIHELCIC, CITY CLERK
GB MTG 12/14/2022

CITY ATTORNEY'S OFFICE:

Marcos Martinez
Marcos Martinez (Oct 28, 2022 13:53 MDT)

SENIOR ASSISTANT CITY ATTORNEY

APPROVED FOR FINANCES:

Emily K. Oster
Emily K. Oster (Dec 15, 2022 17:51 MST)

EMILY OSTER, FINANCE DIRECTOR
EAS Software Subscriptions/ 6203600.530710 AH
Org. Name/Org.#

ITEM # 20-0041

City of Santa Fe Contract
Software Services

THIS AGREEMENT is made and entered into by and between the City of Santa Fe, herein after referred to as the "City", and **Altura Communications Solutions** herein after referred to as the "Contractor."

IT IS MUTUALLY AGREED BETWEEN THE PARTIES:

1. **Definitions**

A. "Products and Services Schedule" refers to the complete list of products and services offered under this Agreement and the price for each. Product and service descriptions may be amended with the prior approval of the Agreement Administrator. New products and services shall not be added to the Products and Services Schedule.

B. "Business Hours" means 8:00 a.m. to 5:00 p.m. Mountain Time.

C. "You" and "your" refers to **Altura Communications Solutions**. "We," "us" or "our" refers to the City and whose accounts are created under this Agreement.

2. **Scope of Work**

A. The Contractor shall provide the following:

1) Avaya Software Maintenance and License Renewal for 36 month term.

3. **Compensation**

The total compensation under this Agreement shall not exceed $243,640.86, including gross receipts tax as described in Exhibit "A" attached hereto and incorporated herein. The breakdown per year is $81,213.62, including New Mexico gross receipts tax.

4. **Payment Provisions**

All payments under this Agreement are subject to the following provisions.

A. Acceptance - In accordance with Section 13-1-158 NMSA 1978, the City shall determine if the product or services provided meet specifications. Until the products or services have been accepted in writing by the City, the City shall not pay for any products or services. Unless otherwise agreed upon between the City and the Contractor, within thirty (30) days from the date the City receives written notice from the Contractor that payment is requested for services or within thirty (30) days from the receipt of products, the City shall issue a written certification (by letter or email) of complete or partial acceptance or rejection of the products or services. Unless the City gives notice of rejection within the specified time period, the products or services will be deemed to have been accepted.

B. Payment of Invoice - Upon acceptance that the products or services have been received and accepted, payment shall be tendered to the Contractor within thirty (30) days after the date of invoice. After the thirtieth day from the date that written certification of acceptance is issued, late payment charges shall be paid on the unpaid balance due on the contract to the Contractor at the rate of 1.5 % per month. Contractor may submit invoices for payment no more frequently than monthly. Payment will be made to the Contractor's designated mailing address. Payment on each invoice shall be due within 30 days from the date of the acceptance of the invoice. The City agrees to pay in full the balance shown on each account's statement, by the due date shown on said statement.

5. **Term**

THIS AGREEMENT SHALL NOT BECOME EFFECTIVE UNTIL APPROVED IN WRITING BY THE CITY. This Agreement shall begin on date approved by the City, and end on **12/31/2022.** The City reserves the right to renew the contract on an annual basis by mutual Agreement not exceed a total of four years in accordance with NMSA 1978, §§ 13-1-150 through 152.

6. **Default and Force Majeure**

The City reserves the right to cancel all or any part of any orders placed under this contract without cost to the City, if the Contractor fails to meet the provisions of this contract and, except as otherwise provided herein, to hold the Contractor liable for any excess cost occasioned by the City due to the Contractor's default. The Contractor shall not be liable for any excess costs if failure to perform the order arises out of causes beyond the control and without the fault or negligence of the Contractor; such causes include, but are not restricted to, acts of God or the public enemy, acts of the State or Federal Government, fires, floods, epidemics, quarantine restrictions, strikes, freight embargoes, unusually severe weather and defaults of sub-contractors due to any of the above, unless the City shall determine that the supplies or services to be furnished by the sub-contractor were obtainable from other sources in sufficient time to permit the Contractor to meet the required delivery scheduled. The rights and remedies of the City provided in this paragraph shall not be exclusive and are in addition to any other rights now being provided by law or under this contract.

7. **Termination**

A. Grounds. The City may terminate this Agreement for convenience or cause. The Contractor may only terminate this Agreement based upon the City's uncured, material breach of this Agreement.

B. Notice; City Opportunity to Cure.

1. Except as otherwise provided in Paragraphs 7.A and 17, the City shall give Contractor written notice of termination at least thirty (30) days prior to the intended date of termination.

2. Contractor shall give City written notice of termination at least thirty (30) days prior to the intended date of termination, which notice shall (i) identify all the City's material breaches of this Agreement upon which the termination is based and (ii) state what the City must do to cure such material breaches. Contractor's notice of termination shall only be effective (i) if the City does not cure all material breaches within the thirty (30) day notice period

or (ii) in the case of material breaches that cannot be cured within thirty (30) days, the City does not, within the thirty (30) day notice period, notify the Contractor of its intent to cure and begin with due diligence to cure the material breach.

3. Notwithstanding the foregoing, this Agreement may be terminated immediately upon written notice to the Contractor (i) if the Contractor becomes unable to perform the services contracted for, as determined by the City; (ii) if, during the term of this Agreement, the Contractor is suspended or debarred by the City; or (iii) the Agreement is terminated pursuant to Paragraph 17, "Appropriations", of this Agreement.

C. Liability. Except as otherwise expressly allowed or provided under this Agreement, the City's sole liability upon termination shall be to pay for acceptable work performed prior to the Contractor's receipt or issuance of a notice of termination; provided, however, that a notice of termination shall not nullify or otherwise affect either party's liability for pre-termination defaults under or breaches of this Agreement. The Contractor shall submit an invoice for such work within thirty (30) days of receiving or sending the notice of termination. *THIS PROVISION IS NOT EXCLUSIVE AND DOES NOT WAIVE THE CITY'S OTHER LEGAL RIGHTS AND REMEDIES CAUSED BY THE CONTRACTOR'S DEFAULT/BREACH OF THIS AGREEMENT.*

8. **Amendment**

A. This Agreement shall not be altered, changed or amended except by instrument in writing executed by the parties hereto and all other required signatories.

B. If the City proposes an amendment to the Agreement to unilaterally reduce funding due to budget or other considerations, the Contractor shall, within thirty (30) days of receipt of the proposed Amendment, have the option to terminate the Agreement, pursuant to the termination provisions as set forth in Paragraph 7 herein, or to agree to the reduced funding.

9. **Status of Contractor**

The Contractor, and Contractor's agents and employees, are independent Contractors for the City and are not employees of the City. The Contractor, and Contractor's agents and employees, shall not accrue leave, retirement, insurance, bonding, use of City vehicles, or any other benefits afforded to employees of the City as a result of this Agreement. The Contractor acknowledges that all sums received hereunder are personally reportable by the Contractor for income tax purposes, including without limitation, self-employment tax and business income tax. The Contractor agrees not to purport to bind the City unless the Contractor has written authority to do so, and then only within the strict limits of that authority.

10. **Assignment**

The Contractor shall not assign or transfer any interest in this Agreement or assign any claims for money due or to become due under this Agreement without the prior written approval of the City.

11. **Subcontracting**

The Contractor shall not subcontract any portion of the services to be performed under this Agreement without the prior written approval of the City. No such subcontract shall relieve

the primary Contractor from its obligations and liabilities under this Agreement, nor shall any subcontract obligate direct payment from the City.

12. **Non-Collusion**

In signing this Agreement, the Contractor certifies the Contractor has not, either directly or indirectly, entered into action in restraint of free competitive bidding in connection with this offer submitted to the City.

13. **Inspection of Plant**

The City may inspect, at any reasonable time during Contractor's regular business hours and upon prior written notice, the Contractor's plant or place of business, or any subcontractor's plant or place of business, which is related to the performance of this contract.

14. **Commercial Warranty**

The Contractor agrees that the tangible personal property or services furnished under this Agreement shall be covered by the most favorable commercial warranties the Contractor gives to any customer for such tangible personal property or services, and that the rights and remedies provided herein shall extend to the City and are in addition to and do not limit any rights afforded to the City by any other clause of this order. Contractor agrees not to disclaim warranties of fitness for a particular purpose or merchantability.

15. **Condition of Proposed Items**

Where tangible personal property is a part of this Agreement, all proposed items are to be NEW and of most current production, unless otherwise specified.

16. **Records and Audit**

During the term of this Agreement and for three years thereafter, the Contractor shall maintain detailed records pertaining to the services rendered and products delivered. These records shall be subject to inspection by the City, the State Auditor and other appropriate state and federal authorities. The City shall have the right to audit billings both before and after payment. Payment under this Agreement shall not foreclose the right of the City to recover excessive or illegal payments.

17. **Appropriations**

The terms of this Agreement, and any orders placed under it, are contingent upon sufficient appropriations and authorization being made by the City Council for the performance of this Agreement. If sufficient appropriations and authorization are not made by the legislature, this Agreement, and any orders placed under it, shall terminate upon written notice being given by the City to the Contractor. The City's decision as to whether sufficient appropriations are available shall be accepted by the Contractor and shall be final. If the City proposes an amendment to the Agreement to unilaterally reduce funding, the Contractor shall have the option to terminate the Agreement or to agree to the reduced funding, within thirty (30) days of receipt of the proposed amendment.

18. **Release**

The Contractor, upon final payment of the amount due under this Agreement, releases the City, its officers and employees, from all liabilities, claims and obligations whatsoever arising from or under this Agreement. The Contractor agrees not to purport to bind the City, unless the Contractor has express written authority to do so, and then only within the strict limits of that authority.

19. **Confidentiality**

Any confidential information provided to or developed by the Contractor in the performance of this Agreement shall be kept confidential and shall not be made available to any individual or organization by the Contractor without prior written approval by the City.

20. **Conflict of Interest**

A. The Contractor represents and warrants that it presently has no interest and, during the term of this Agreement, shall not acquire any interest, direct or indirect, which would conflict in any manner or degree with the performance or services required under the Agreement. The Contractor shall comply with any applicable provisions of the New Mexico Governmental Conduct Act and the New Mexico Financial Disclosures Act.

B. The Contractor further represents and warrants that it has complied with, and, during the term of this Agreement, will continue to comply with, and that this Agreement complies with all applicable provisions of the Governmental Conduct Act, Chapter 10, Article 16 NMSA 1978.

C. Contractor's representations and warranties in Paragraphs A and B of this Paragraph are material representations of fact upon which the City relied when this Agreement was entered into by the parties. Contractor shall provide immediate written notice to the City if, at any time during the term of this Agreement, Contractor learns that Contractor's representations and warranties in Paragraphs A and B of this Paragraph 20 were erroneous on the effective date of this Agreement or have become erroneous by reason of new or changed circumstances. If it is later determined that Contractor's representations and warranties in Paragraphs A and B of this Paragraph 20 were erroneous on the effective date of this Agreement or have become erroneous by reason of new or changed circumstances, in addition to other remedies available to the City and notwithstanding anything in the Agreement to the contrary, the City may immediately terminate the Agreement.

D. All terms defined in the Governmental Conduct Act have the same meaning in this section.

21. **Approval of Contractor Representative(s)**

The City reserves the right to require a change in Contractor representative(s) if the assigned representative(s) are not, in the opinion of the City, adequately serving the needs of the City.

22. **Scope of Agreement; Merger**

This Agreement incorporates all the agreements, covenants, and understandings between the parties hereto concerning the subject matter hereof, and all such covenants, agreements and understandings have been merged into this written Agreement. No prior agreements or understandings, verbal or otherwise, of the parties or their agents shall be valid or enforceable unless embodied in this Agreement.

23. **Notice**

The Procurement Code, Sections 13-1-28 through 13-1-199 NMSA 1978, imposes civil and criminal penalties for its violation. In addition, the New Mexico criminal statutes impose felony penalties for bribes, gratuities and kickbacks.

24. **Equal Opportunity Compliance**

The Contractor agrees to abide by all federal and state laws, and local Ordinances, pertaining to equal employment opportunity. In accordance with all such laws, rules, and regulations, the Contractor agrees to assure that no person in the United States shall on the grounds of race, religion, color, national origin, ancestry, sex, age, physical or mental handicap, or serious medical condition, spousal affiliation, sexual orientation or gender identity, be excluded from employment with or participation in, be denied the benefits of, or be otherwise subjected to discrimination under any program or activity performed under this Agreement. If Contractor is found not to be in compliance with these requirements during the life of this Agreement, Contractor agrees to take appropriate steps to correct these deficiencies.

25. **Indemnification**

The Contractor shall hold the City and its employees harmless and shall indemnify the City and its employees against any and all claims, suits, actions, liabilities and costs of any kind, including attorney's fees for personal injury or damage to property arising from the acts or omissions of the Contractor, its agents, officers, employees or subcontractors. The Contractor shall not be liable for any injury or damage as a result of any negligent act or omission committed by the City, its officers or employees.

26. **New Mexico Tort Claims Act**

Any liability incurred by the City of Santa Fe in connection with this Agreement is subject to the immunities and limitations of the New Mexico Tort Claims Act, Section 41-4-1, et. seq. NMSA 1978, as amended. The City and its "public employees" as defined in the New Mexico Tort Claims Act, do not waive sovereign immunity, do not waive any defense and do not waive any limitation of liability pursuant to law. No provision in this Agreement modifies or waives any provision of the New Mexico Tort Claims Act.

27. **Applicable Law**

The laws of the State of New Mexico shall govern this Agreement, without giving effect to its choice of law provisions. Venue shall be proper only in a New Mexico court of competent

jurisdiction in accordance with NMSA 1978, § 38-3-1 (G). By execution of this Agreement, Contractor acknowledges and agrees to the jurisdiction of the courts of the State of New Mexico over any and all lawsuits arising under or out of any term of this Agreement.

28. **Limitation of Liability**

The Contractor's liability to the City, for any cause whatsoever shall be limited to the purchase price paid to the Contractor for the products and services that are the subject of the City's, claim. The foregoing limitation does not apply to paragraph 25 of this Agreement or to damages resulting from personal injury caused by the Contractor's negligence.

29. **Incorporation by Reference and Precedence**

If this Agreement has been procured pursuant to a request for proposals, this Agreement is derived from (1) the request for proposal, (including any written clarifications to the request for proposals and any City response to questions); (2) the Contractor's best and final offer; and (3) the Contractor's response to the request for proposals.

In the event of a dispute under this Agreement, applicable documents will be referred to for the purpose of clarification or for additional detail in the following order of precedence: (1) amendments to the Agreement in reverse chronological order; (2) the Agreement, including the scope of work and all terms and conditions thereof; (3) the request for proposals, including attachments thereto and written responses to questions and written clarifications; (4) the Contractor's best and final offer if such has been made and accepted by the City; and (5) the Contractor's response to the request for proposals.

30. **Workers' Compensation**

The Contractor agrees to comply with state laws and rules applicable to workers' compensation benefits for its employees. If the Contractor fails to comply with the Workers' Compensation Act and applicable rules when required to do so, this Agreement may be terminated by the City.

31. **Inspection**

If this contract is for the purchase of tangible personal property (goods), final inspection and acceptance shall be made at Destination. Tangible personal property rejected at Destination for non-conformance to specifications shall be removed at Contractor's risk and expense promptly after notice of rejection and shall not be allowable as billable items for payment.

32. **Inspection of Services**

If this contract is for the purchase of services, the following terms shall apply.

A. Services, as used in this Article, include services performed, workmanship, and material furnished or utilized in the performance of services.

B. The Contractor shall provide and maintain an inspection system acceptable to the City covering the services under this Agreement. Complete records of all inspection work performed by the Contractor shall be maintained and made available to the City and for as long

thereafter as the Agreement requires. The City has the right to inspect and test all services contemplated under this Agreement to the extent practicable at all times and places during the term of the Agreement. The City shall perform inspections and tests in a manner that will not unduly delay or interfere with Contractor's performance.

C. If the City performs inspections or tests on the premises of the Contractor or a subcontractor, the Contractor shall furnish, and shall require subcontractors to furnish, at no increase in contract price, all reasonable facilities and assistance for the safe and convenient performance of such inspections or tests.

D. If any part of the services do not conform with the requirements of this Agreement, the City may require the Contractor to re-perform the services in conformity with the requirements of this Agreement at no increase in contract amount. When the defects in services cannot be corrected by re-performance, the City may:

(1) require the Contractor to take necessary action(s) to ensure that future performance conforms to the requirements of this Agreement; and

(2) reduce the contract price to reflect the reduced value of the services performed.

E. If the Contractor fails to promptly re-perform the services or to take the necessary action(s) to ensure future performance in conformity with the requirements of this Agreement, the City may:

(1) by contract or otherwise, perform the services and charge to the Contractor any cost incurred by the City that is directly related to the performance of such service; or

(2) terminate the contract for default.

33. **Insurance**

If the services contemplated under this Agreement will be performed on or in City facilities or property, Contractor shall maintain in force during the entire term of this Agreement, the following insurance coverage(s), naming the City as additional insured.

A. Workers Compensation (including accident and disease coverage) at the statutory limit. Employers liability: $100,000.

B. Comprehensive general liability (including endorsements providing broad form property damage, personal injury coverage and contractual assumption of liability for all liability the Contractor has assumed under this contract). Limits shall not be less than the following:

a. Bodily injury: $1,000,000 per person /$1,000,000 per occurrence.
b. Property damage or combined single limit coverage: $1,000,000.
c. Automobile liability (including non-owned automobile coverage): $1,000,000.
d. Umbrella: $1,000,000.

C. Contractor shall maintain the above insurance for the term of this Agreement and name the City as an additional insured and provide for 30 days cancellation notice on any Certificate of Insurance form furnished by Contractor. Such certificate shall also specifically state the coverage provided under the policy is primary over any other valid and collectible insurance and provide a waiver of subrogation.

34. **Impracticality of Performance**

A party shall be excused from performance under this Agreement for any period that the party is prevented from performing as a result of an act of God, strike, war, civil disturbance,

epidemic, or court order, provided that the party has prudently and promptly acted to take any and all steps that are within the party's control to ensure performance. Subject to this provision, such non-performance shall not be deemed a default or a ground for termination.

35. **Invalid Term or Condition**

If any term or condition of this Agreement shall be held invalid or unenforceable, the remainder of this Agreement shall not be affected and shall be valid and enforceable.

36. **Enforcement of Agreement**

A party's failure to require strict performance of any provision of this Agreement shall not waive or diminish that party's right thereafter to demand strict compliance with that or any other provision. No waiver by a party of any of its rights under this Agreement shall be effective unless express and in writing, and no effective waiver by a party of any of its rights shall be effective to waive any other rights.

37. **Patent, Copyright and Trade Secret Indemnification**

A. The Contractor shall defend, at its own expense, the City against any claim that any product or service provided under this Agreement infringes any patent, copyright to trademark in the United States or Puerto Rico, and shall pay all costs, damages and attorneys' fees that a court finally awards as a result of any such claim. In addition, if any third party obtains a judgment against the City based upon Contractor's trade secret infringement relating to any product or services provided under this Agreement, the Contractor agrees to reimburse the City for all costs, attorneys' fees and amount of the judgment. To qualify for such defense and or payment, the City shall:

i. give the Contractor prompt written notice within 48 hours of any claim;

ii. allow the Contractor to control the defense of settlement of the claim; and

iii. cooperate with the Contractor in a reasonable way to facilitate the defense or settlement of the claim.

B. If any product or service becomes, or in the Contractor's opinion is likely to become the subject of a claim of infringement, the Contractor shall at its option and expense:

i. provide the City the right to continue using the product or service and fully indemnify the City against all claims that may arise out of the City's use of the product or service;

ii. replace or modify the product or service so that it becomes non-infringing; or,

iii. accept the return of the product or service and refund an amount equal to the value of the returned product or service, less the unpaid portion of the purchase price and any other amounts, which are due to the Contractor. The Contractor's obligation will be void as to any product or service modified by the City to the extent such modification is the cause of the claim.

38. **Survival**

The Agreement paragraphs titled "Patent, Copyright, Trademark, and Trade Secret Indemnification; Indemnification; and Limit of Liability" shall survive the expiration of this Agreement. Software licenses, leases, maintenance and any other unexpired Agreements that were entered into under the terms and conditions of this Agreement shall survive this Agreement.

39. **Disclosure Regarding Responsibility**

A. Any prospective Contractor and any of its Principals who enter into a contract greater than sixty thousand dollars ($60,000.00) with any City for professional services, tangible personal property, services or construction agrees to disclose whether the Contractor, or any principal of the Contractor's company is presently debarred, suspended, proposed for debarment, or declared ineligible for award of contract by any federal entity, state agency or local public body.

B. Principal, for the purpose of this disclosure, means an officer, director, owner, partner, or a person having primary management or supervisory responsibilities within a business entity or related entities.

C. The Contractor shall provide immediate written notice to the City if, at any time during the term of this Agreement, the Contractor learns that the Contractor's disclosure was at any time erroneous or became erroneous by reason of changed circumstances.

D. A disclosure that any of the items in this requirement exist will not necessarily result in termination of this Agreement. However, the disclosure will be considered in the determination of the Contractor's responsibility and ability to perform under this Agreement. Failure of the Contractor to furnish a disclosure or provide additional information as requested will be grounds for immediate termination of this Agreement pursuant to the conditions set forth in Paragraph 7 of this Agreement.

E. Nothing contained in the foregoing shall be construed to require establishment of a system of records in order to render, in good faith, the disclosure required by this document. The knowledge and information of a Contractor is not required to exceed that which is the normally possessed by a prudent person in the ordinary course of business dealings.

F. The disclosure requirement provided is a material representation of fact upon which reliance was placed when making an award and is a continuing material representation of the facts during the term of this Agreement. If during the performance of the contract, the Contractor is indicted for or otherwise criminally or civilly charged by any government entity (federal, state or local) with commission of any offenses named in this document the Contractor must provide immediate written notice to the City. If it is later determined that the Contractor knowingly rendered an erroneous disclosure, in addition to other remedies available to the Government, the City may terminate the involved contract for cause. Still further the City may suspend or debar the Contractor from eligibility for future solicitations until such time as the matter is resolved to the satisfaction of the City.

40. **Suspension, Delay or Interruption of Work**

The City may, without cause, order the Contractor, in writing, to suspend, delay or interrupt the work in whole or in part for such period of time as the City may determine. The contract sum and contract time shall be adjusted for increases in cost and/or time associated with Contractor's compliance therewith. Upon receipt of such notice, Contractor shall leave the jobsite and any equipment in a safe condition prior to departing. Contractor must assert rights to additional compensation within thirty (30) days after suspension of work is lifted and return to

work is authorized. Any compensation requested for which entitlement is granted and the contract sum adjusted, shall have profit included (for work completed) and for cost only (not profit) for Contractor costs incurred directly tied to the suspension itself and not otherwise covered by Contract remedy. Any change in Total Compensation must be reflected in an Amendment executed pursuant to Section 8 of this Agreement.

41. **Notification**

Either party may give written notice to the other party in accordance with the terms of this Paragraph. Any written notice required or permitted to be given hereunder shall be deemed to have been given on the date of delivery if delivered by personal service or hand delivery or three (3) business days after being mailed.

To the City:
David Tapia
City of Santa Fe
200 Lincoln Ave
Santa Fe, NM 87501

To the Contractor:
Gretchen Witti
Altura Communications Solutions
~~**1570 Pacheco Street, Suite B-6**~~ 2074 GALISTEO ST, B-5 MK
Santa Fe, NM 87505

Either party may change its representative or address above by written notice to the other in accordance with the terms of this Paragraph. The carrier for mail delivery and notices shall be the agent of the sender.

To the Contractor:
Gretchen Witti
Altura Communications Solutions
~~**1570 Pacheco Street, Suite B-6**~~ 2074 GALISTEO ST, B-5 MK
Santa Fe, NM 87505

Either party may change its representative or address above by written notice to the other in accordance with the terms of this Paragraph. The carrier for mail delivery and notices shall be the agent of the sender.

42. **Succession**

This Agreement shall extend to and be binding upon the successors and assigns of the parties.

IN WITNESS WHEREOF, the Parties have executed this Agreement as of the date of the signature by the required approval authorities below.

CITY OF SANTA FE:

ALAN WEBBER, MAYOR

DATE: 2/3/20

CONTRACTOR:
Altura Communications Solutions

NAME AND TITLE
DAVID KEY, CHIEF FINANCIAL OFFICER

DATE: 11/14/19

CRS# 02-481372-00-9

Registration # 18-00001379

ATTEST:

YOLANDA Y. VIGIL, CITY CLERK
ccmtg 1/29/20

APPROVED AS TO FORM:

11/12/19

ERIN K. MCSHERRY, CITY ATTORNEY

APPROVED:

1/30/20

MARY MCCOY, FINANCE DIRECTOR

6203600.530710

~~Business Unit~~ Line Item
org/obj

ALTURA
communication solutions
A Platinum Equity Company

Customer Name:	City of Santa Fe ITT Division
Premises Information (install site) -	-
Street Address:	2651 Siringo Road
City:	Santa Fe
State:	NM
Zip Code:	87505
Customer Contact Name:	Edward Romero
omer Contact Phone:	505-955-5567

QUOTE FOR City of Santa Fe Annual Avaya Support

Quantity	Mat/ SAP Code	System/Service Description	SPD List Monthly Price	SPD Disc Monthly Total	SPD discounted Annual Total
100	291920	SA PREF AES R7 BSC TSAPI 3YAN	$ 26.00	$ 19.50	$ 234.00
100	292100	SA PREF AES R7 DMCC BASIC 3YAN	$ 26.00	$ 19.50	$ 234.00
100	291926	UPG ADV AES R7 BSC TSAPI 3YAN	$ 20.00	$ 15.00	$ 180.00
100	292106	UPG ADV AES R7 DMCC BASIC 3YAN	$ 20.00	$ 15.00	$ 180.00
300	292473	SA PREF AURA R7 ANALOG 3YAN	$ 78.00	$ 58.50	$ 702.00
2009	292587	SA PREF AURA R7 FOUNDATION 3YAN	$ 2,953.23	$ 2,214.92	$ 26,579.07
200	292606	SA PREF AURA R7 CORE 3YAN	$ 436.00	$ 327.00	$ 3,924.00
300	292480	UPG ADV AURA R7 ANALOG 3YAN	$ 60.00	$ 45.00	$ 540.00
2009	292594	UPG ADV AURA R7 FOUNDATION 3YAN	$ 2,270.17	$ 1,702.63	$ 20,431.53
200	292613	UPG ADV AURA R7 CORE 3YAN	$ 300.00	$ 225.00	$ 2,700.00
92	291729	SA PREF CC R7 ELITE AGT 3YAN	$ 486.68	$ 365.01	$ 4,380.12
92	291736	UPG ADV CC R7 ELITE AGT 3YAN	$ 299.00	$ 224.25	$ 2,691.00
92	293110	SA PREF CMS R18 AGT 1-250 3YAN	$ 175.72	$ 131.79	$ 1,581.48
20	293200	SA PREF CMS R18 SUPERVISOR 3YAN	$ 108.80	$ 81.60	$ 979.20
1	293212	SA PREF CMS R18 INITIAL ACD 3YAN	$ -	$ -	$ -
92	293116	UPG ADV CMS R18 AGT 1-250 3YAN	**$ 299.00**	$ 224.25	$ 2,691.00
1	284959	SA PREF ADS SAL GTWY OVA	$ -	$ -	$ -
1	284960	UPG ADV ADS SAL GTWY OVA	$ -	$ -	$ -
70	295955	SA PREF WFO R15 CR PKG 3YAN	$ 559.30	$ 419.48	$ 5,033.70
70	295961	UPG ADV WFO R15 CR PKG 3YAN	$ 203.70	$ 152.78	$ 1,833.30
		Jan 1, 2020 - Dec 31, 2020			**$ 74,894.40**
		Jan 1, 2021- Dec 31, 2021			$ 74,894.40
Purchase Price		Jan 1, 2022- Dec 31, 2022			$ 74,894.40
Tax in Santa Fe @ 8.4375%					**$ 6,319.22**
ALL PRICING INCLUDING TAXES		**Purchase price plus taxes for 1/1/2020-12/31/2020**			**$ 81,213.62**
	Pricing good for 60 days				

SPD# 70-361-17-02013 Exp 4/30/20

ALTURA COMMUNICATION SOLUTIONS, LLC		City of Santa Fe
BY:		BY:
NAME: Gretchen Witti		NAME:
TITLE: Strategic Sales		TITLE:
DATE: 10/29/19		DATE:

Exhibit "A"

ALTURA
communication solutions
A Waterfield company

PROPOSAL

CITY OF SANTA FE

2026 Bundled Support - 2 Year Term

VERSION	QUOTE #	DATE PREPARED	PREPARED FOR	PREPARED BY
3	45516.10	10/29/2025	Edward Romero Network Engineer	MaryGrace Crisci (714) 948-8450 marygrace.crisci@waterfield.com



Avaya License Activation Fee

License Activation

Altura will perform a remote license activation during regular business hours. If Customer's Change Policy or system requirements require after hours license activation, then additional labor will be required.
Normal turnaround time for license activation will be 10 business days after the PO is provided to Altura. If licenses are required in less than 5 business days from receipt of the Customer PO, then an expedite fee of $500 will be required.

Any additional services will be added via a Job Change Order.

Signature Support

Signature Support

This Services Description and all Services and Deliverables hereunder shall be governed by the terms and conditions outlined in the Master Services Agreement (the "Agreement") between Customer and Waterfield. If there is a conflict between this Services Description and the Agreement, the Agreement will control the subject matter hereof unless expressly amended in this SOW. Waterfield's Signature Support Program ("SSP") provides the following on a pre-paid basis for specific Customer platforms and applications described in the "Support Entitlements" section of this agreement. All services provided under this agreement will be delivered remotely.

SIGNATURE SUPPORT - SERVICES DESCRIPTION
Customer agrees to purchase and Waterfield agrees to provide Signature Support ("Services") according to the terms of this contract. The terms governing the purchase and sale of the Services are contained in this Services Schedule and the Master Sales Agreement. Signature below acknowledges that signatory is duly authorized to accept this Service Agreement. Acceptance by Waterfield is evidenced by an authorized signature.

Waterfield Signature Support (Services) is an Information Technology Infrastructure Library (ITIL) based service provided to our customers across critical technology areas. Waterfield's Signature Support offering consists of the monitoring, troubleshooting, device and service management (incident, change, problem, MACD), and reporting of the Customer's Managed Infrastructure. Service Assets common to all Waterfield supported technologies are based upon practices recommended by the ITIL and specific OEM's. All remote Services will be provided 24x7x365, except where noted. This document (the "Services Description") describes the Service elements, features, and Assets of Waterfield Signature Support.

REQUIREMENT OF MANUFACTURER SUPPORT CONTRACT
Access to manufacturer escalation support and access to patches and software for the covered systems is contingent upon purchase and maintenance of a Manufacturer Support Contract. If no manufacturer support exists or when equipment is deemed unsupportable by the manufacturer, or it is deemed not serviceable due to lack of replacement part availability, Waterfield support will be best effort.

Services Elements Summary

The following tables summarize the service elements included in this Waterfield Signature Support offer:

Service Element	
24x7x365 Service Desk	x
Incident Management	x
Change Management	x
WATERFIELD Service Portal	x

Bundled Hours	x

Scope of Signature Support

Support coverage for this contract applies to the type and quantities of licensed users listed in the quote, applications, hardware and assets listed below only. Upon onboarding, if additional elements or quantities are identified and confirmed as requested for inclusion under support, a Contract Change Notice amendment will be issued for the deltas in coverage and costs. Additions, upgrades or expansions of the environment that occur during the contracted term will also be covered under a Contract Change Notice amendment.

Unless stated elsewhere in this contract, all Covered Assets listed will be onboarded to Waterfield Monitoring and placed under the Signature Support coverage elements defined in this contract.

Site		
3273321 - 200 LINCOLN AVE, SANTA FE, NM 87501		
Covered Assets	**Covered Qty**	**Hardware Replacement**
CORE PROCESSOR	1	VIRTUAL
GATEWAY	6	N/A
MESSAGING	2	VIRTUAL
SYSTEM MGR	1	VIRTUAL
SESSION MGR	1	VIRTUAL
AADS	1	VIRTUAL
SESSION BOARDER CONTROLER	2	VIRTUAL
AES	1	VIRTUAL

Hardware Replacement Legend:
V = Waterfield parts replacement NBD
A = Manufacturer parts replacement NBD
B = Manufacturer parts replacement 24x7x4
C = Manufacturer parts Replacement 8x5x4
D = Manufacturer parts replacement and onsite dispatch NBD
E = Manufacturer parts replacement and onsite dispatch 24x7x4
F = Manufacturer parts replacement and onsite dispatch 8x5x4

If applicable, the following vendors are covered by 3rd Party Case Management under this contracted support agreement:

Vendor Name	Support Type
VENDOR NAME	Case Management

INTEGRATED APPLICATIONS NOT COVERED

If present, for applications that have an integration to covered assets listed above but that are not supported by Waterfield directly; Waterfield will support integration points within the covered assets only, far end applications to be supported by customer or their vendor.

24x7x365 Service Desk

Waterfield will provide 24x7 support to Customer through our Service Desk with best-in-class solutions delivered and supported by our team of certified experts. Additionally, we provide support through our Customer Service Portal for ticket creation and disbursement.

- Waterfield will provide 24x7 system support for the solution environment. This includes access to Waterfield's 24x7 Service Desk. All incidents will be responded to and managed according to Waterfield's ticketing system.
- Waterfield will document procedures for communicating issues and accessing support.
- Customer will be able to open and track tickets via the Waterfield Support Line (phone), the Waterfield Collaboration Portal (web), and email.

Incident Management

Waterfield will remotely identify, troubleshoot, and restore normal operational functionality if an Incident is detected in a Managed Asset.
Waterfield Responsibilities

- Create tickets from detected or reported Events, where required
- Manage Incidents by classifying, prioritizing, troubleshooting, and restoring normal operation
- Escalation to the primary telephony OEM is included in Signature Support. Any other OEM or 3rd party escalations are only supported under the Enhanced Signature Support offering for 3rd Party Vendor Management.
- Assign and reassess Incident priorities in accordance with Waterfield process and policy as defined in the Waterfield Service Management Governance addendum.
- Notify relevant parties about Incidents, keeping the parties updated through Incident closure, per communication protocols established at onboarding (preferred customer contacts, escalation points, etc)
- Provide Incident reports pertaining to the Managed Assets available via the Waterfield Management Portal.

Customer Responsibilities

- Provide means for Waterfield to access, troubleshoot, and resolve Managed Assets. Primary remote access for Waterfield will be via the Waterfield Monitoring Server.
- Provide details about support contracts and other documentation/authorization required to facilitate Incident resolution
- Contact Waterfield if Customer believes an Incident is in-progress or has occurred
- PerformWaterfield or third-party recommended changes to Managed Assets or third-party hardware, software, or services, if outside of the scope of Services Management.
- Provide Waterfield with updates to Customer initiated actions related to the Incident(s).

Please note: Incident Tickets will be on "hold" for any period of time Waterfield is delayed in receiving required information from Customer, the End User, or applicable third-party service providers.

Hardware Replacement (Parts Coverage)
Hardware replacement coverage listed in the Covered Assets table will be replaced under this contract via Waterfield or Manufacturer Support parts coverage as noted. Parts will be replaced on a Next Business Day basis if replacement if identified prior to 12pm PST.

Waterfield Technician Dispatch (Onsite Support)
Based on evolving virtualization technologies and support models that have greatly reduced the need for onsite support, and to keep costs

down to our customers, technician dispatch for troubleshooting or replacement hardware installation, if required, will be provided on a Time and Materials basis only.

- If replacement parts provided by the OEM or Waterfield require pre-staging or configuration prior to shipment to customer site, Waterfield will notify customer and stage the hardware at a Waterfield office location and ship to customer site for customer installation.
- Upon request, onsite technician support will be provided on a Best Effort basis with a Next Business Day target for Priority 1 and 2 Incidents and subject to hardware and resource availability and installation readiness of hardware, to be billed on a Time and Materials basis or applied against contracted Bundled Hours if purchased. Dispatch will be supported by a Waterfield resource or Waterfield authorized contractor.
- If Manufacturer onsite dispatch is purchased, dispatch is subject to the SLA of the purchased model per the Covered Assets table above

Problem Management

Problem Management is the process of identifying the cause of an error in the supported solutions, usually reported as occurrences of related Incidents, and removing the causes of these errors permanently. Problem resolution and elimination of root cause often calls for the application of a change in the existing environments.

Problem cases are created as necessary and worked by Waterfield staff in order to find the root cause for a single or set of related issues and apply a permanent fix.

Change Management

Change Management is the process of recording and managing the planned deployment of alterations to customer environments, processes, and documentation. Waterfield will utilize Customer's documented Change Management process, if available. Otherwise, Waterfield utilizes its own system-enforced Change Management process to complete any change needed as the result of an Incident or Problem ticket.

If required by documented customer change procedures, Waterfield will prepare and provide a Method of Procedure (MOP) document in Waterfield's standard format outlining the details, timing and impacts of said change for customer Change approval processing. If Waterfield is required to participate in customer Change Advisory Board meetings or utilize custom formats or process for MOP development, additional charges may apply.

Waterfield is not accountable for Changes made by Customer staff outside of the agreed upon, documented Change Process.
Waterfield will manage the deployment of technical changes to the Managed Assets (e.g. configuration changes), in Customer's environment as a result of a change activity. Change types supported by Change Management are Emergency, Normal, and Standard Changes.
Waterfield Responsibilities

- Manage the lifecycle of Change Management Requests, as required, resulting from an Incident, Problem, Service Request, as otherwise mutually agreed to in writing or as required in accordance with the Change Management Process
- Coordinate, provide governance and execute changes to Managed Assets, using commercially reasonable efforts to minimize any adverse impacts of those changes to Customer's environment
- Validate and prioritize Change Requests based on urgency
- Manage end-to-end lifecycle of Change Requests
- Provide notifications of change request start and completion for Customer-impacting changes
- Work with Customer to identify and approve Standard Changes
- As part of Customer's CAB process, discuss with Customer any changes to Monitored Assets that may result from Changes approved with respect to the Managed Assets
- Perform pre- and post-change Health Check

Customer Responsibilities

- Provide written documentation to Waterfield at onboarding, or as modified throughout the contract term, defining any custom Change Policies or processes that must be adhered to by Waterfield
- Submit Requests for Change (RFCs) for Waterfield Managed Assets as Service Requests via the Portal, Smart Bonding, or Customer ITSM
- Submit Requests for Change (RFCs) for Customer Managed Assets as Changes via the Portal, Smart Bonding, or Customer ITSM
- Inform Waterfield on Customer scheduling, communicating, and executing of changes or customer performed additions or modifications to the supported environment.
- Provide Waterfield access to Customer CAB meetings and facilitate communication between Waterfield and Customer's CAB
- Confirm and maintain scheduled windows for change activities
- Determine and mitigate any impacts to the Monitored Assets or out-of-scope devices as a result of a change to the Managed Assets
- Review and approve (within 48 hours or less) Waterfield-initiated Changes to Managed Assets via Waterfields Service portal.

WATERFIELD Service Portal

Waterfield will provide a web-based Portal that provides Customer reports and information related to the Services. The Waterfield Management Portal will be the primary means of communication on all cases between the Waterfield Service Team and the customer.
Waterfield Responsibilities

- Implement and make available to Customer a Portal for the Service
- Provide capability to open, update, and review cases, changes, etc.
- Provide capability to view reports

Customer Responsibilities

- Provide end user profiles for Portal access in accordance with relevant industry practice
- Review and update (as needed) Incidents and Change Requests

Bundled Hours - 24 Hours Annual Allotment

Upon contract activation and at the anniversary date of each subsequent year of a multi-year contract, Customer's services account will be credited with the specified annual hours of Waterfield Services to be used at Customer's discretion. Additional hours over and above the included/bundled hours will be charged at the contracted rate below. Bundled hours allotment and rate are covered in the Program Fees section below.

All work requested under Bundled Hours is facilitated, scheduled and coordinated by the Waterfield support team and all hours spent by all roles engaged in the planning and execution of requested work are accrued against the Bundled Hours. Utilization of hours is tracked and reported to customers on a monthly basis or available upon request.

Bundled hours are intended to be used within the contract year and do not rollover to subsequent years.

SERVICES REQUESTS (MOVE, ADD, CHANGE AND DELETE - MACD)
Typical uses for these hours include transactional programming requests generally related to specific user additions, removals or changes and not holistic and scoped changes as outlined above. Waterfield maintains flexibility in working with our customers on the utilization of Bundled Hours, however they are intended for use primarily for MACD defined as follows:

- Requests are made via a ticket on the Waterfield portal or email to the Waterfield Service Desk, fulfilled by Waterfield with communications occurring within our ticketing system.
- MACD is defined as not requiring multiple resources or coordination with external vendors or parties, can be completed in less than 2 hours per engagement and does not require Project Management or Coordination.

- Waterfield will utilize a proven change control process for managing changes requested under this program.
- Complex requests requiring PMO management, 3rd party support coordination, multiples phases or that support net new functionality, integrations or capabilities will be quoted as new project work through the Waterfield account team.

Forward Planning

Waterfield will make expert resources available to participate in your forward planning or strategic steering committee meetings at your request. We can add significant value to your planning process by relaying best practices and current technology trends employed by other Waterfield customers.

- Waterfield will conduct a formal review of consulting hours usage
- Waterfield will conduct an annual application and system review to align with the current Customer budget cycle:
    - Review system architecture for adequate capacity/redundancy
    - Review Service Desk engagements over the past year; identify areas for improvement
- Waterfield will work with the Customer to identify the architectural, application, and operational improvement opportunities to help Customer further exploit its technology and application investment. The actual implementation or execution of these opportunities will be handled under separate SOWs or this agreement's Application Changes and Improvements provision if adequate hours are available.
- If desired, Waterfield will assist Customer with planning and scoping future budgeting cycles.

ADAPTABILITY TO CHANGING BUSINESS & TECHNICAL NEEDS
Waterfield will schedule a run-rate review with Customer after six months of activity. The objective of this review will be to validate the Customer bundled-hours budget and adjust if necessary. Should Customer and Waterfield determine that additional bundled hours are needed, Waterfield will submit a Project Change Request for Customer's approval.

SEVERITY DEFINITIONS AND RESPONSE SLA:

LEVEL	DEFINITION	SERVICE LEVEL AGREEMENT RESPONSE TIMES
Priority 1	Service interruption affecting whole site or network, mission critical server or service, or critical application on a managed server	Within one (1) hour
Priority 2	Service interruption affecting small number of users, or service degradation affecting many users (large office or multiple small offices)	Within four (4) hours
Priority 3	Service interruption affecting a single user, or service; degradation affecting a few users	Within one (1) business day
Priority 4	Informational & General requests, MACD requests.	Within one (1) week

Customer acknowledges that incidents caused by system hardware or software may require third-party manufacturer involvement. Waterfield is not liable for system hardware or software failures or delays in receiving system software bug fixes, patches, maintenance releases, upgrades, or new versions

COVERAGE EXCLUSIONS

- Active system issues present at time of contract start date.
    - Prior to contract start date, Waterfield will perform remote and/or onsite system audits to validate the health and integrity of the systems being placed under coverage including the system environment.
    - Significant issues that may interfere with the supportability of the systems under coverage found existing during this audit will be documented and communicated to customer with quote for resolution on a Time and Materials basis if feasible.
    - Should customer elect not to remediate these issues via Waterfield or other means, Waterfield reserves the right to deny support coverage that is related to these unresolved issues.
- Customer provided hardware failures or issues: If Waterfield is required to perform support activities to restore or reload a supported application due to customer provide physical or virtual server failure, Waterfield reserves the right to bill for such activity on a Time and Materials basis.
- For all customer provided elements of the infrastructure including VMware/compute/OS or other CPE, customer is responsible for all support, patching, remediation and collaboration with Waterfield on Incident resolution that may be dependent on remediations to such infrastructure.
- Labor and material costs for configuration or programming changes, the addition of equipment or relocation of same. This activity is considered Move, Add, and Change activity (MAC) and can be provided at our then current Time and Material rates, or pre-paid under Block of Hours purchase, or included as optional under Waterfield's Enhanced Signature Support offerings.
- Battery back-up systems, DC rectifiers, uninterruptible power supply systems (UPS), operating supplies, electrical work external to the system.
- Labor and material costs for Assets that do not affect the normal operation of the system (i.e. Cabinets, racks, shelves, etc.).
- Force Majeure: Any act external to the system that causes, directly or indirectly, a system failure, either immediately or later, or other malfunction including without any limitation, failures of trunk or toll lines from local dial tone providers or long distance carriers, other equipment connected to the system, or abnormal environmental conditions, power failures or fluctuations, (for example power fluctuations caused by power surge or lightning), flooding, water damage, and any other equipment damage associated with Acts of God
- The negligent, intentional, or willful acts of customer or third parties, or any acts or events which may adversely affect the performance of the system, occasioned by acts of Customer, or any third party.
- If customer requires escorted (customer monitored) remote access to systems, SLA's do not apply.

Customer Responsibilities

- Customer agrees to perform in a timely manner, at Customer's sole expense, the following responsibilities in support of Waterfield Services under this Agreement:
    - Unless otherwise stated in an executed Signature Support agreement, customer to provide physical or virtual server to support Waterfield remote monitoring platform per provided specifications at core location.
    - For legacy systems supported by modem, customer to provide modem unless purchased under this Signature Support quote.
- If deploying on customer provided virtual environment, Waterfield strongly recommends the monitoring server to be deployed on a separate physical host from those hosting applications being monitored to ensure survivability of the monitoring server if there is a failure of the main telephony host.
- For products where manufacturer is not procured through Waterfield, if escalation to manufacturer is required, Waterfield will refer escalation to Customer for engagement under their support contract with manufacturer. Waterfield will participate in ongoing troubleshooting as required with the manufacturer to facilitate remediation.
- Waterfield persistent remote access to the environment is required under this contract and provided via the Waterfield Monitoring server or legacy modem described above. If customer declines to deploy the monitoring server or modem for remote monitoring, persistent remote access via VPN or other means must be provided for Waterfield to support the systems under Signature Support.
- Provide access to Customer's premises and a suitable work area for Waterfield service personnel.
- Appoint an administrator (the "Contact") knowledgeable in Customer operational requirements as a point of contact to Waterfield and with authority to act on Customer's behalf in matters relating to this agreement, including the issuance of purchase orders.

- Provide the proper environment, electrical and telecommunications connections as specified by the system's manufacturer(s).
- Maintain back-up files and discs for all relevant software comprising a portion of or being related to the system.
- Not relocate or modify any portion of the system or its Assets or allow anyone access to the internal Assets and software without written notification to Waterfield.

Terms and Cancelation

Renewal
At the conclusion of the term specified in this contract, this Service Schedule shall automatically renew for successive one (1) year terms at Waterfield's current rates at time of renewal of the Services Schedule, unless non-renewal notice is provided in writing sixty (60) days prior to the renewal date as defined in this contract.
Previous term unused Bundled Hours allotments are not available for credit or extension into renewal term.

Cancellation of Support
Customer may cancel the Waterfield support portion at any time, with or without cause, provided a 60-day written advanced notice is provided to Waterfield by an authorized signatory. No credits for prepayments will be provided. If notice of cancellation is provided mid-term, 50% of the remaining unpaid Waterfield Signature Support balance of the full contracted term will be due immediately upon termination. Cancellation penalties are waived if service is moving to another Waterfield provided solution or service.
The cancellation of Manufacturer Support Agreements will follow the manufacturers' cancellation policy in effect during the term of this agreement. Current policy terms from the manufacturer are available from Waterfield upon request.

Resale of Manufacturer Support
If this agreement contains the resale of Manufacturer Support provided by the OEM to support their products and services, such Manufacturer Support is provided independently of any Waterfield support quoted herein. Waterfield holds no performance obligation over the delivery of this Manufacturer Support which is bound by the prevailing terms and conditions set by the OEM at time of sale.

PROPOSAL

ALTURA communication solutions
A Waterfield company

CONSULTING | CONTACT CENTER | COLLABORATION | NETWORK | SECURITY | MANAGED SERVICES

2026 Bundled Support - 2 Year Term

Prepared by:

Altura Communications Solutions

Mary Grace Crisci
(714) 948-8450
marygrace.crisci@waterfield.com

Prepared for:

CITY OF SANTA FE

P.O. Box 909
SANTA FE, New Mexico 87504
Edward Romero
(505) 955-5567
ehromero@santafenm.gov

Quote Information:

Quote #: 045516

Version: 3
Delivery Date: 10/29/2025
Expiration Date: 12/19/2025

Avaya License Activation Fee

Description		Price	Qty	Ext. Price
WTPSO-45516	**Subscription License Activation Service - Remote Conversion During Brief OT Event**	**$2,405.00**	**1**	**$2,405.00**
INVOICE SCHEDULE: Other One-Time Fees				

Subtotal: **$2,405.00**

911 Secure Support - 12/18/2025-12/17/2026

Description		Recurring	Qty	Ext. Recurring
Software Support				
911S-SENT-2-AS	**Sentry E911 Sentinel - Software Only - 1,001-2,500 Endpoints**	$995.00	1	$995.00
Annual renewable support fee which includes access to telephone technical support to correct problems. Technical Support staff is available Monday through Friday 9am to 5pm ET. Refer to "911S-ENG-PROSERV-PP" for pre-paid hours included in this proposal. For after hours/weekend and holiday support please refer to "911S-ENG-PROSERV-OHS". Also includes Annual Software Update Service.				
911S-SCOUT-AURA-AS	**Sentry E911 Scout for Avaya Aura CM/AES/Session Manager**	$325.00	1	$325.00
Annual renewable support fee which includes access to telephone technical support to correct problems. Technical Support staff is available Monday through Friday 9am to 5pm ET. Refer to "911S-ENG-PROSERV-PP" for pre-paid hours included in this proposal. For after hours/weekend and holiday support please refer to "911S-ENG-PROSERV-OHS". Also includes Annual Software Update Service.				
911S-TRACK-AS	**Sentry E911 Internal Tracker, External Tracker, MacLocations Tracker**	$325.00	1	$325.00
Annual renewable support fee which includes access to telephone technical support to correct problems. Technical Support staff is available Monday through Friday 9am to 5pm ET. Refer to "911S-ENG-PROSERV-PP" for pre-paid hours included in this proposal. For after hours/weekend and holiday support please refer to				

911 Secure Support - 12/18/2025-12/17/2026

Description	Recurring	Qty	Ext. Recurring
"911S-ENG-PROSERV-OHS". Also includes Annual Software Update Service.			
911S-W-TRACK-AS **Sentry Wireless Tracker**	$995.00	1	$995.00
Annual renewable support fee which includes access to telephone technical support to correct problems. Technical Support staff is available Monday through Friday 9am to 5pm ET. Refer to "911S-ENG-PROSERV-PP" for pre-paid hours included in this proposal. For after hours/weekend and holiday support please refer to "911S-ENG-PROSERV-OHS". Also includes Annual Software Update Service.			
911S-BEACON-AS **Sentry E911 Beacon**	$20.00	100	$2,000.00
Annual renewable support fee which includes access to telephone technical support to correct problems. Technical Support staff is available Monday through Friday 9am to 5pm ET. Refer to "911S-ENG-PROSERV-PP" for pre-paid hours included in this proposal. For after hours/weekend and holiday support please refer to "911S-ENG-PROSERV-OHS". Also includes Annual Software Update Service.			
911S-BEACON-ND-100-A **Sentry Beacon with ERL/ELE Filtering and 100 Notification Domains**	$1,795.00	1	$1,795.00
Annual renewable support fee which includes access to telephone technical support to correct problems. Technical Support staff is available Monday through Friday 9am to 5pm ET. Refer to "911S-ENG-PROSERV-PP" for pre-paid hours included in this proposal. For after hours/weekend and holiday support please refer to "911S-ENG-PROSERV-OHS". Also includes Annual Software Update Service.			
911S-EP-LICENSING-5- **Sentry End Point Licensing (1-5,000 Endpoints)**	$1.25	1500	$1,875.00
Annual renewable support fee which includes access to telephone technical support to correct problems. Technical Support staff is available Monday through Friday 9am to 5pm ET. Refer to "911S-ENG-PROSERV-PP" for pre-paid hours included in this proposal. For after hours/weekend and holiday support please refer to "911S-ENG-PROSERV-OHS". Also includes Annual Software Update Service.			
911S-SENTRY-DIS-AS **Sentry Cloud and Sentry Gatekeeper**	$1,995.00	1	$1,995.00
Annual renewable support fee which includes access to telephone technical support to correct problems. Technical Support staff is available Monday through Friday 9am to 5pm ET. Refer to "911S-ENG-PROSERV-PP" for pre-paid hours included in this proposal. For after hours/weekend and holiday support please refer to "911S-ENG-PROSERV-OHS". Also includes Annual Software Update Service.			

PROPOSAL

ALTURA communication solutions
A Waterfield company

CONSULTING | CONTACT CENTER | COLLABORATION | NETWORK | SECURITY | MANAGED SERVICES

911 Secure Support - 12/18/2025-12/17/2026

Description		Recurring	Qty	Ext. Recurring
911S-ENG-PROSERV	**Engineering Assistance and Professional Services**	$200.00	10	$2,000.00
Pre-Paid support hours included per year to access 911 Secure's technical support staff. 911 Secure's technical support is available Monday-Friday 9am to 5pm ET for telephone and remote assistance to correct problems. For Off Hours Support please refer to "Off Hours Support". Once the pre-purchased hours have been used additional hours must be purchased in advanced before additional support will be given unless 911 Secure deems the Technical Support is Urgent then an exception will be made by the 911 Secure support staff to assist client. These additional hours will be billed at the "Off Hours Support" rate. After each support issue is completed the client will be notified via email how many hours were used and their remaining balance. It is suggested that once the client has either less than 10% of the pre-purchased hours remaining or one hour or less remaining additional hours should be purchased.				
SENTRY VPC - 911 Routing Subscription Services				
911S-VPC-MRC-AM250	**Annual Fee (Includes first 141 Records)**	$3,000.00	1	$3,000.00
Service includes bundle or singular DID MAC upload, ongoing near, real-time updating and uploading of location position, address validation, emergency routing service.				
911S-ECRC-1	**Annual Emergency Call Response Center - 1,000+ Endpoints**	$1,000.00	1	$1,000.00
All calls that are routed to the ECRC are charged at a rate of $75 per call. 20 calls per year are included for annual charge of $1,000. For each call over 20 the $75 per call fee will apply. Auto-renewed. Invoiced 90 days prior to anniversary date. *NOTE: This only applies to calls that originate from endpoints that are not provisioned in the 911 Secure VPC database.*				
SENTRY MONTHLY RECURRING CHARGES PER ZONE CHARGE - 12 Months Paid Up Front				
911S-NG911AD-ARC	**Sentry NG911 Additional Data Powered by RapidSOS**	$60.00	66	$3,960.00
Provides for NG911 Additional Data to be sent to the RapidSOS Clearinghouse. The Public Safety Answer Point (PSAP) will be able to retrieve the Additional Data from the RapidSOS Clearinghouse.				
INVOICE SCHEDULE: Manufacturer Maintenance / Subscription				
Gross Receipts Tax	**Estimated Tax Rate: 8.1875%**	$1,659.20	1	$1,659.20

Annual Subtotal: **$21,924.20**

911 Secure Support - 12/18/2026-12/17/2027

Description		Recurring	Qty	Ext. Recurring
Software Support				
911S-SENT-2-AS	**Sentry E911 Sentinel - Software Only - 1,001-2,500 Endpoints**	$995.00	1	$995.00

911 Secure Support - 12/18/2026-12/17/2027

Description		Recurring	Qty	Ext. Recurring
Annual renewable support fee which includes access to telephone technical support to correct problems. Technical Support staff is available Monday through Friday 9am to 5pm ET. Refer to "911S-ENG-PROSERV-PP" for pre-paid hours included in this proposal. For after hours/weekend and holiday support please refer to "911S-ENG-PROSERV-OHS". Also includes Annual Software Update Service.				
911S-SCOUT-AURA-AS	**Sentry E911 Scout for Avaya Aura CM/AES/Session Manager**	$325.00	1	$325.00
Annual renewable support fee which includes access to telephone technical support to correct problems. Technical Support staff is available Monday through Friday 9am to 5pm ET. Refer to "911S-ENG-PROSERV-PP" for pre-paid hours included in this proposal. For after hours/weekend and holiday support please refer to "911S-ENG-PROSERV-OHS". Also includes Annual Software Update Service.				
911S-TRACK-AS	**Sentry E911 Internal Tracker, External Tracker, MacLocations Tracker**	$325.00	1	$325.00
Annual renewable support fee which includes access to telephone technical support to correct problems. Technical Support staff is available Monday through Friday 9am to 5pm ET. Refer to "911S-ENG-PROSERV-PP" for pre-paid hours included in this proposal. For after hours/weekend and holiday support please refer to "911S-ENG-PROSERV-OHS". Also includes Annual Software Update Service.				
911S-W-TRACK-AS	**Sentry Wireless Tracker**	$995.00	1	$995.00
Annual renewable support fee which includes access to telephone technical support to correct problems. Technical Support staff is available Monday through Friday 9am to 5pm ET. Refer to "911S-ENG-PROSERV-PP" for pre-paid hours included in this proposal. For after hours/weekend and holiday support please refer to "911S-ENG-PROSERV-OHS". Also includes Annual Software Update Service.				
911S-BEACON-AS	**Sentry E911 Beacon**	$20.00	100	$2,000.00
Annual renewable support fee which includes access to telephone technical support to correct problems. Technical Support staff is available Monday through Friday 9am to 5pm ET. Refer to "911S-ENG-PROSERV-PP" for pre-paid hours included in this proposal. For after hours/weekend and holiday support please refer to "911S-ENG-PROSERV-OHS". Also includes Annual Software Update Service.				
911S-BEACON-ND-100-A	**Sentry Beacon with ERL/ELE Filtering and 100 Notification Domains**	$1,795.00	1	$1,795.00
Annual renewable support fee which includes access to telephone technical support to correct problems. Technical Support staff is available Monday through Friday 9am to 5pm ET. Refer to "911S-ENG-PROSERV-PP" for pre-paid hours included in this proposal. For after hours/weekend and holiday support please refer to "911S-ENG-PROSERV-OHS". Also includes Annual Software Update Service.				

PROPOSAL

ALTURA communication solutions
A Waterfield company

CONSULTING | CONTACT CENTER | COLLABORATION | NETWORK | SECURITY | MANAGED SERVICES

911 Secure Support - 12/18/2026-12/17/2027

Description		Recurring	Qty	Ext. Recurring
911S-EP-LICENSING-5-	**Sentry End Point Licensing (1-5,000 Endpoints)**	$1.25	1500	$1,875.00
Annual renewable support fee which includes access to telephone technical support to correct problems. Technical Support staff is available Monday through Friday 9am to 5pm ET. Refer to "911S-ENG-PROSERV-PP" for pre-paid hours included in this proposal. For after hours/weekend and holiday support please refer to "911S-ENG-PROSERV-OHS". Also includes Annual Software Update Service.				
911S-SENTRY-DIS-AS	**Sentry Cloud and Sentry Gatekeeper**	$1,995.00	1	$1,995.00
Annual renewable support fee which includes access to telephone technical support to correct problems. Technical Support staff is available Monday through Friday 9am to 5pm ET. Refer to "911S-ENG-PROSERV-PP" for pre-paid hours included in this proposal. For after hours/weekend and holiday support please refer to "911S-ENG-PROSERV-OHS". Also includes Annual Software Update Service.				
911S-ENG-PROSERV	**Engineering Assistance and Professional Services**	$200.00	10	$2,000.00
Pre-Paid support hours included per year to access 911 Secure's technical support staff. 911 Secure's technical support is available Monday-Friday 9am to 5pm ET for telephone and remote assistance to correct problems. For Off Hours Support please refer to "Off Hours Support". Once the pre-purchased hours have been used additional hours must be purchased in advanced before additional support will be given unless 911 Secure deems the Technical Support is Urgent then an exception will be made by the 911 Secure support staff to assist client. These additional hours will be billed at the "Off Hours Support" rate. After each support issue is completed the client will be notified via email how many hours were used and their remaining balance. It is suggested that once the client has either less than 10% of the pre-purchased hours remaining or one hour or less remaining additional hours should be purchased.				
SENTRY VPC - 911 Routing Subscription Services				
911S-VPC-MRC-AM250	**Annual Fee (Includes first 141 Records)**	$3,000.00	1	$3,000.00
Service includes bundle or singular DID MAC upload, ongoing near, real-time updating and uploading of location position, address validation, emergency routing service.				
911S-ECRC-1	**Annual Emergency Call Response Center - 1,000+ Endpoints**	$1,000.00	1	$1,000.00
All calls that are routed to the ECRC are charged at a rate of $75 per call. 20 calls per year are included for annual charge of $1,000. For each call over 20 the $75 per call fee will apply. Auto-renewed. Invoiced 90 days prior to anniversary date. *NOTE: This only applies to calls that originate from endpoints that are not provisioned in the 911 Secure VPC database.*				
SENTRY MONTHLY RECURRING CHARGES PER ZONE CHARGE - 12 Months Paid Up Front				
911S-NG911AD-ARC	**Sentry NG911 Additional Data Powered by RapidSOS**	$60.00	66	$3,960.00

PROPOSAL

ALTURA communication solutions
A Waterfield company

CONSULTING | CONTACT CENTER | COLLABORATION | NETWORK | SECURITY | MANAGED SERVICES

911 Secure Support - 12/18/2026-12/17/2027

Description		Recurring	Qty	Ext. Recurring
Provides for NG911 Additional Data to be sent to the RapidSOS Clearinghouse. The Public Safety Answer Point (PSAP) will be able to retrieve the Additional Data from the RapidSOS Clearinghouse.				
INVOICE SCHEDULE: Manufacturer Maintenance / Subscription				
Gross Receipts Tax	**Estimated Tax Rate: 8.1875%**	$1,659.20	1	$1,659.20

Annual Subtotal: **$21,924.20**

Computer Instruments Support - 12/21/2025-12/20/2026

Description		Recurring	Qty	Ext. Recurring
1800-0800	**Total Care Maintenance, 8-5, M-F**	$6,026.00	1	$6,026.00
INVOICE SCHEDULE: Manufacturer Maintenance / Subscription				
Gross Receipts Tax	**Estimated Tax Rate: 8.1875%**	$629.23	1	$629.23

Annual Subtotal: **$6,655.23**

Computer Instruments Support - 12/21/2026-12/20/2027

Description		Recurring	Qty	Ext. Recurring
1800-0800	**Total Care Maintenance, 8-5, M-F**	$6,026.00	1	$6,026.00
INVOICE SCHEDULE: Manufacturer Maintenance / Subscription				
Gross Receipts Tax	**Estimated Tax Rate: 8.1875%**	$629.23	1	$629.23

Annual Subtotal: **$6,655.23**

OpenText Support - 12/22/2025-12/21/2026

Description		Recurring	Qty	Ext. Recurring
GSA Contract Number - GSA - 74QTCA19D007R				
Unique #: 71244-12786 Unique Name: 1474823111006 ASP Support				
1000052324	**CX-E - 32 Ports/5 UM/5 PA/1 Call Server Maintenance**	$4,898.65	1	$4,898.65
1000052478	**1000 UM User licenses Maintenance**	$2,671.90	1	$2,671.90

OpenText Support - 12/22/2025-12/21/2026

Description		Recurring	Qty	Ext. Recurring
1000053327	**XMedius CX-E/Hospitality Prime Protect**	$484.10	1	$484.10
1000052440	**SIP Port (All SIP integrations) - Per Port Maintenance**	$23.00	32	$736.00
1000052492	**Alternate TUI Emulations Maintenance**	$445.30	1	$445.30
1000052444	**1 Speech resource (ASR and TTS) License (add additional ports up to 500 Speech resources) Maintenance**	$144.00	3	$432.00
1000052442	**Additional Call Server (maximum 20 Call Servers total per CX-E system with 8.1 and higher) Maintenance**	$223.25	1	$223.25
1000054469	**Fax Telephony Gateway Maintenance**	$155.90	1	$155.90
1000052414	**Avaya Communication Manager SIP (Includes SIP trunk for CM/SM, and SIP station for SM integration) Maintenance**	$118.10	1	$118.10
INVOICE SCHEDULD: Manufacture Maintenance / Subscription				
Gross Receipts Tax	**Estimated Tax Rate: 8.1875%**	$832.28	1	$832.28

Annual Subtotal: **$10,997.48**

OpenText Support - 12/22/2026-12/21/2027

Description		Recurring	Qty	Ext. Recurring
GSA Contract Number - GSA - 74QTCA19D007R				
Unique #: 71244-12786 Unique Name: 1474823111006 ASP Support				
1000052324	**CX-E - 32 Ports/5 UM/5 PA/1 Call Server Maintenance**	$5,143.55	1	$5,143.55
1000052478	**1000 UM User licenses Maintenance**	$2,805.55	1	$2,805.55
1000053327	**XMedius CX-E/Hospitality Prime Protect**	$507.25	1	$507.25
1000052440	**SIP Port (All SIP integrations) - Per Port Maintenance**	$24.15	32	$772.80
1000052492	**Alternate TUI Emulations Maintenance**	$467.60	1	$467.60
1000052444	**1 Speech resource (ASR and TTS) License (add additional ports up to 500 Speech resources) Maintenance**	$144.00	3	$432.00
1000052442	**Additional Call Server (maximum 20 Call Servers total per CX-E system with 8.1 and higher) Maintenance**	$223.25	1	$223.25

PROPOSAL

ALTURA communication solutions
A Waterfield company

CONSULTING | CONTACT CENTER | COLLABORATION | NETWORK | SECURITY | MANAGED SERVICES

OpenText Support - 12/22/2026-12/21/2027

Description		Recurring	Qty	Ext. Recurring
1000054469	**Fax Telephony Gateway Maintenance**	$163.70	1	$163.70
1000052414	**Avaya Communication Manager SIP (Includes SIP trunk for CM/SM, and SIP station for SM integration) Maintenance**	$124.00	1	$124.00
INVOICE SCHEDULD: Manufacture Maintenance / Subscription				
Gross Receipts Tax	**Estimated Tax Rate: 8.1875%**	$871.13	1	$871.13

Annual Subtotal: **$11,510.83**

Avaya Subscription - 12/31/2025-12/30/2026

Description		Recurring	Qty	Ext. Recurring
GSA Contract Number - Avaya GS-35F-0156V				
3273321 CITY OF SANTA FE/CITY HALL, 200 LINCOLN AVE, SANTA FE, NM, US, 87501-1904				
284959	**Avaya Support Advantage Preferred - Service - 24 x 7 - Technical - Electronic, Physical**	$0.00	1	$0.00
284960	**Avaya Upgrade Advantage - Service - Technical - Electronic**	$0.00	1	$0.00
434845	**UC ESSENTIALS LICENSE FIXED SUBS ADJ LP**	$22.00	100	$2,200.00
GSA Price $5.54 - Annual Price $66.48				
433924	**AES BASIC TSAPI ENTL LIC FXD SUBS ADJLP**	$0.00	100	$0.00
405787	**CC BASIC VOICE LICENSE FIXED SUBS, SUBSCRIPTION FIXED USAGE**	$267.85	92	$24,642.20
GSA Price $58.52 - Annual Price $702.24				
434846	**UC ADVANCED LICENSE FIXED SUBS ADJ LP**	$32.35	1700	$54,995.00
GSA Price $8.20 - Annual price $98.40				
433926	**AES DMCC ENTL LIC FXD SUBS ADJLP**	$0.00	100	$0.00
407011	**CC WE ACRA REC PKG LIC FIXED SUBS 1YR AN PREPD, PRODUCT SUBSCRIPTION**	$319.20	70	$22,344.00
GSA Price $26.60 - Annual Price $319.20				
351498	**SUBCRIPTION SA SUPPORT CC WE ACRA RECORDING PKG TRACKING, SA SS SSU CONTRACT**	$0.00	84	$0.00

PROPOSAL

ALTURA communication solutions
A Waterfield company

CONSULTING | CONTACT CENTER | COLLABORATION | NETWORK | SECURITY | MANAGED SERVICES

Avaya Subscription - 12/31/2025-12/30/2026

Description		Recurring	Qty	Ext. Recurring
296288	**SA PREFER SUPT WFO R15 LICENSE MOVE TRACKING, SA SS SSU CONTRACT**	$0.00	1	$0.00
INVOICE SCHEDULE: Manufacture Maintenance / Subscription				
Gross Receipts Tax	**Estimated Tax Rate: 8.1875%**	$8,529.84	1	$8,529.84

Annual Subtotal: **$112,711.04**

Avaya Subscription - 12/31/2026-12/30/2027

Description		Recurring	Qty	Ext. Recurring
GSA Contract Number - Avaya GS-35F-0156V				
3273321 CITY OF SANTA FE/CITY HALL, 200 LINCOLN AVE, SANTA FE, NM, US, 87501-1904				
284959	**Avaya Support Advantage Preferred - Service - 24 x 7 - Technical - Electronic, Physical**	$0.00	1	$0.00
284960	**Avaya Upgrade Advantage - Service - Technical - Electronic**	$0.00	1	$0.00
434845	**UC ESSENTIALS LICENSE FIXED SUBS ADJ LP**	$22.00	100	$2,200.00
GSA Price $5.54 - Annual Price $66.48				
433924	**AES BASIC TSAPI ENTL LIC FXD SUBS ADJLP**	$0.00	100	$0.00
405787	**CC BASIC VOICE LICENSE FIXED SUBS, SUBSCRIPTION FIXED USAGE**	$267.85	92	$24,642.20
GSA Price $58.52 - Annual Price $702.24				
434846	**UC ADVANCED LICENSE FIXED SUBS ADJ LP**	$32.35	1700	$54,995.00
GSA Price $8.20 - Annual price $98.40				
433926	**AES DMCC ENTL LIC FXD SUBS ADJLP**	$0.00	100	$0.00
407011	**CC WE ACRA REC PKG LIC FIXED SUBS 1YR AN PREPD, PRODUCT SUBSCRIPTION**	$319.20	70	$22,344.00
GSA Price $26.60 - Annual Price $319.20				
351498	**SUBCRIPTION SA SUPPORT CC WE ACRA RECORDING PKG TRACKING, SA SS SSU CONTRACT**	$0.00	84	$0.00
296288	**SA PREFER SUPT WFO R15 LICENSE MOVE TRACKING, SA SS SSU CONTRACT**	$0.00	1	$0.00

Avaya Subscription - 12/31/2026-12/30/2027

Description		Recurring	Qty	Ext. Recurring
INVOICE SCHEDULE: Manufacture Maintenance / Subscription				
Gross Receipts Tax	**Estimated Tax Rate: 8.1875%**	$8,529.84	1	$8,529.84

Annual Subtotal: **$112,711.04**

Signature Support - 12/31/2025-12/30/2026

Description		Recurring	Qty	Ext. Recurring
GSA Contract Number - GS-35F-0666W				
54151S	**Special Item Number 54151S IT Professional Services**	**$47,913.00**	**1**	**$47,913.00**
INVOICE SCHEDULE: Signature Support Services				
Gross Receipts Tax	**Estimated Tax Rate: 8.1875%**	$3,922.88	1	$3,922.88
SIN 54151S Resources Utilized in Support Contact Center Solutions Engineer Network Engineer Tier 2 NOC Help Desk				

Annual Subtotal: **$51,835.88**

Signature Support - 12/31/2026-12/30/2027

Description		Recurring	Qty	Ext. Recurring
GSA Contract Number - GS-35F-0666W				
54151S	**Special Item Number 54151S IT Professional Services**	**$47,913.00**	**1**	**$47,913.00**
INVOICE SCHEDULE: Signature Support Services				
Gross Receipts Tax	**Estimated Tax Rate: 8.1875%**	$3,922.88	1	$3,922.88

PROPOSAL

ALTURA communication solutions
A Waterfield company

CONSULTING | CONTACT CENTER | COLLABORATION | NETWORK | SECURITY | MANAGED SERVICES

Signature Support - 12/31/2026-12/30/2027

Description	Recurring	Qty	Ext. Recurring
SIN 54151S			
Resources Utilized in Support			
Contact Center Solutions Engineer			
Network Engineer Tier 2 NOC			
Help Desk			

Annual Subtotal: **$51,835.88**

Quote Summary

Description	Recurring	One-Time
Avaya License Activation Fee	$0.00	$2,405.00
911 Secure Support - 12/18/2025-12/17/2026	$21,924.20	$0.00
911 Secure Support - 12/18/2026-12/17/2027	$21,924.20	$0.00
Computer Instruments Support - 12/21/2025-12/20/2026	$6,655.23	$0.00
Computer Instruments Support - 12/21/2026-12/20/2027	$6,655.23	$0.00
OpenText Support - 12/22/2025-12/21/2026	$10,997.48	$0.00
OpenText Support - 12/22/2026-12/21/2027	$11,510.83	$0.00
Avaya Subscription - 12/31/2025-12/30/2026	$112,711.04	$0.00
Avaya Subscription - 12/31/2026-12/30/2027	$112,711.04	$0.00
Signature Support - 12/31/2025-12/30/2026	$51,835.88	$0.00
Signature Support - 12/31/2026-12/30/2027	$51,835.88	$0.00
Total:	$408,761.01	$2,405.00
Project Total:		$411,166.01

INVOICING SCHEDULE & PAYMENT TERMS

Invoicing Schedule

Fee Type	Trigger To Start Invoicing	Invoicing Method
Recurring Fees (by Category)		
CC/UC Agent Seats and Bundles	Earlier of a) first production use of the CC/UC service, or b) the start of the Dates of Performance.	Annual in Advance
CC/UC Feature Add-ons	Earlier of a) date that each ordered service is first made available for production use, or b) ninety (90) days after Effective Date.	Annual in Advance
Other Software Services		Annual in Advance
Manufacturer Maintenance/Subscription	• **New: License Issuance or Shipment Date** • **Existing: Service Order Date** ***Subject to change based on manufacturer policy and actual maintenance subscription dates.***	**Annual in Advance**
Signature Support Services	• **New Project: Earlier of a) first production use of the CC/UC service, or b) the start of the Dates of Performance.** • **Renewal: Service Order Date**	**Annual in Advance**
Ascend Support Services	• New Project: Earlier of a) first production use of the CC/UC service, or b) the start of the Dates of Performance. • Renewal: Service Order Date	Annual in Advance
One-Time Fees & Deposits		
Professional Services Fees	Service Order Date	Unless otherwise stated above, 50% upon Effective Date; 50% upon Final Completion
Block of Hours	Service Order Date	100% in advance
Hardware/Equipment Purchases	Order Size: • Greater than $100k: Service Order Date • Less than $100k: Shipment Date	Order Size: • Greater than $100k: 50% due upon Receipt of Invoice; 50% upon Shipment • Less than $100k: 100% upon Shipment
Software Licenses	License Issuance or Shipment Date	100% upon License Issuance
Other One-Time Fees	**Service Order Date**	**100% in advance**
Usage Fees		
Communications	As Used	Monthly in Arrears
Storage	As Used	Monthly in Arrears
Other Usage-Based Fees	As Used	Monthly in Arrears

Payment Terms

INVOICING SCHEDULE & PAYMENT TERMS

Payment for all invoices is due within thirty (30) calendar days from the invoice date. Invoices will be delivered to the Customer via email. Any payment not received by the due date will be considered overdue. Overdue payments may be subject to a late fee of 1.5% per month (or the maximum rate permitted by law, whichever is lower) until paid in full. Waterfield reserves the right to suspend services in the event of non-payment beyond sixty (60) days.

If there are any disputes or discrepancies with an invoice, Customer must notify Waterfield in writing within ten (10) business days of receipt of the invoice. Both parties agree to work in good faith to resolve any billing issues promptly.

Payments can be made via electronic funds transfer (EFT), which includes Automated Clearing House (ACH) or wire transfers, or for an additional fee, via check or credit card. The additional fee is the larger of $500 or 5% of the amount. All payments must be made in U.S. Dollars (USD).

Any adjustments to the subscription fees due to changes in service levels, usage, or other factors will be reflected in the subsequent billing cycle. Credits for service outages or other issues will be applied to future invoices.

Expenses

The prices quoted above do not include travel or related expenses. Any on-site presence required for the project, along with travel expenses such as airfare, hotel accommodations, local transportation, and meals, will be billed separately at cost to the Customer, provided these expenses are approved in advance by the Customer.

In addition, any other Customer-approved expenses directly attributable to supporting the project will be billed at cost. This includes, but is not limited to, fees for facility usage such as usability testing and recording studios, as well as the acquisition of any specialized hardware or software necessary for the development and testing of the application(s).

All travel and related expenses must receive prior written approval from the Customer before being incurred. Detailed receipts and documentation for all expenses will be provided with the invoice. The Customer reserves the right to request additional documentation or clarification regarding any billed expenses.

Expenses will be billed monthly and included in the invoice for the period in which they were incurred. Any disputed expenses must be raised in writing within fifteen (15) days of receipt of the invoice.

To ensure cost control, the Waterfield will make reasonable efforts to minimize travel and other expenses, and to use cost-effective options where possible.

Taxes, Shipping, Handling & Duties

All prices quoted in this SOW include estimated taxes. Excluded and not included in the price is shipping, handling, and duty charges. Applicable taxes, including but not limited to sales, use, value-added, or other taxes, will be added to the invoice at the time of billing and are the responsibility of the Customer. Shipping, handling, and duty charges, if applicable, will also be invoiced at cost.

Company will include detailed line items for any taxes, shipping, handling, and duty charges on the invoice. The Customer is responsible for providing any applicable tax exemption certificates to Company prior to the issuance of the invoice.

Altura Communications Solutions

Signature: _____

Name: _____

Title: _____

Date: _____

CITY OF SANTA FE

Signature: _____

Name: _____

Title: _____

Date: _____

CERTIFICATE OF LIABILITY INSURANCE

DATE (MM/DD/YYYY): 1/10/2026 — 12/9/2025

THIS CERTIFICATE IS ISSUED AS A MATTER OF INFORMATION ONLY AND CONFERS NO RIGHTS UPON THE CERTIFICATE HOLDER. THIS CERTIFICATE DOES NOT AFFIRMATIVELY OR NEGATIVELY AMEND, EXTEND OR ALTER THE COVERAGE AFFORDED BY THE POLICIES BELOW. THIS CERTIFICATE OF INSURANCE DOES NOT CONSTITUTE A CONTRACT BETWEEN THE ISSUING INSURER(S), AUTHORIZED REPRESENTATIVE OR PRODUCER, AND THE CERTIFICATE HOLDER.

IMPORTANT: If the certificate holder is an ADDITIONAL INSURED, the policy(ies) must have ADDITIONAL INSURED provisions or be endorsed. If SUBROGATION IS WAIVED, subject to the terms and conditions of the policy, certain policies may require an endorsement. A statement on this certificate does not confer rights to the certificate holder in lieu of such endorsement(s).

PRODUCER Lockton Companies, LLC DBA Lockton Insurance Brokers, LLC in CA CA license #0F15767 444 W. 47th St., Ste. 900 Kansas City MO 64112-1906 (816) 960-9000 kcasu@lockton.com	**CONTACT NAME:** **PHONE (A/C, No, Ext):** **FAX (A/C, No):** **E-MAIL ADDRESS:**
INSURED 1567755 WTI HOLDINGS, LLC 110 S. HARTFORD AVE., SUITE 2502 TULSA OK 74120-1843	**INSURER(S) AFFORDING COVERAGE** — **NAIC #** **INSURER A :** The Continental Insurance Company — 35289 **INSURER B :** National Fire Insurance Co of Hartford — 20478 **INSURER C :** Lloyd's Syndicate 3623 **INSURER D :** Illinois Union Insurance Company — 27960 **INSURER E :** Associated Industries Insurance Co, Inc. — 23140 **INSURER F :**

COVERAGES **CERTIFICATE NUMBER:** 22585414 **REVISION NUMBER:** XXXXXXX

THIS IS TO CERTIFY THAT THE POLICIES OF INSURANCE LISTED BELOW HAVE BEEN ISSUED TO THE INSURED NAMED ABOVE FOR THE POLICY PERIOD INDICATED. NOTWITHSTANDING ANY REQUIREMENT, TERM OR CONDITION OF ANY CONTRACT OR OTHER DOCUMENT WITH RESPECT TO WHICH THIS CERTIFICATE MAY BE ISSUED OR MAY PERTAIN, THE INSURANCE AFFORDED BY THE POLICIES DESCRIBED HEREIN IS SUBJECT TO ALL THE TERMS, EXCLUSIONS AND CONDITIONS OF SUCH POLICIES. LIMITS SHOWN MAY HAVE BEEN REDUCED BY PAID CLAIMS.

INSR LTR	TYPE OF INSURANCE	ADDL INSD	SUBR WVD	POLICY NUMBER	POLICY EFF (MM/DD/YYYY)	POLICY EXP (MM/DD/YYYY)	LIMITS	
A	X **COMMERCIAL GENERAL LIABILITY** ☐ CLAIMS-MADE ☐ OCCUR GEN'L AGGREGATE LIMIT APPLIES PER: X POLICY ☐ PRO-JECT ☐ LOC ☐ OTHER:	Y	N	7014687563	7/1/2025	7/1/2026	EACH OCCURRENCE DAMAGE TO RENTED PREMISES (Ea occurrence) MED EXP (Any one person) PERSONAL & ADV INJURY GENERAL AGGREGATE PRODUCTS - COMP/OP AGG	$ 1,000,000 $ 1,000,000 $ 15,000 $ 1,000,000 $ 2,000,000 $ 2,000,000
B	**AUTOMOBILE LIABILITY** X ANY AUTO ☐ OWNED AUTOS ONLY ☐ SCHEDULED AUTOS ☐ HIRED AUTOS ONLY ☐ NON-OWNED AUTOS ONLY	N	N	7014687577	7/1/2025	7/1/2026	COMBINED SINGLE LIMIT (Ea accident) BODILY INJURY (Per person) BODILY INJURY (Per accident) PROPERTY DAMAGE (Per accident)	$ 1,000,000 $ XXXXXXX $ XXXXXXX $ XXXXXXX
A	X **UMBRELLA LIAB** X OCCUR **EXCESS LIAB** ☐ CLAIMS-MADE ☐ DED X RETENTION $ 10,000	N	N	7014687580	7/1/2025	7/1/2026	EACH OCCURRENCE AGGREGATE	$ 10,000,000 $ 10,000,000
	WORKERS COMPENSATION AND EMPLOYERS' LIABILITY Y / N ANY PROPRIETOR/PARTNER/EXECUTIVE OFFICER/MEMBER EXCLUDED? ☐ **(Mandatory in NH)** If yes, describe under DESCRIPTION OF OPERATIONS below	N / A		NOT APPLICABLE			☐ PER STATUTE ☐ OTH-ER E.L. EACH ACCIDENT E.L. DISEASE - EA EMPLOYEE E.L. DISEASE - POLICY LIMIT	$ XXXXXXX $ XXXXXXX $ XXXXXXX
C	CYBER/TECH E&O	N	N	W29226240601	12/10/2024	1/10/2026	POLICY AGGREGATE: $3,000,000 RETENTION: $100,000	

DESCRIPTION OF OPERATIONS / LOCATIONS / VEHICLES (ACORD 101, Additional Remarks Schedule, may be attached if more space is required)

THIS CERTIFICATE SUPERSEDES ALL PREVIOUSLY ISSUED CERTIFICATES FOR THIS HOLDER, APPLICABLE TO THE CARRIERS LISTED AND THE POLICY TERM(S) REFERENCED.

$3Mx$3M EXCESS CYBER/TECH E&O, ILLINOIS UNION INSURANCE COMPANY, POLICY NO. G71530875, EFFECTIVE 12/10/2024-1/10/2026, LIMIT OF LIABILITY/AGGREGATE LIMIT $3,000,000; $4Mx$6M EXCESS CYBER/TECH E&O, ASSOCIATED INDUSTRIES INSURANCE COMPANY, INC., POLICY NO. ACL125871700; EFFECTIVE 12/10/2024-1/10/2026; LIMIT OF LIABILITY $4,000,000 CITY OF SANTA FE IS ADDITIONAL INSURED ON GENERAL LIABILITY COVERAGE, AS REQUIRED BY WRITTEN CONTRACT AND SUBJECT TO THE TERMS AND CONDITIONS OF THE POLICY. DICE COMMUNICATIONS, LLC IS A NAMED INSURED.

CERTIFICATE HOLDER

22585414
CITY OF SANTA FE
200 LINCOLN AVENUE
SANTA FE NM 87501

CANCELLATION See Attachment

SHOULD ANY OF THE ABOVE DESCRIBED POLICIES BE CANCELLED BEFORE THE EXPIRATION DATE THEREOF, NOTICE WILL BE DELIVERED IN ACCORDANCE WITH THE POLICY PROVISIONS.

AUTHORIZED REPRESENTATIVE

© 1988-2015 ACORD CORPORATION. All rights reserved.

CNA

CNA PARAMOUNT
Blanket Additional Insured - Owners, Lessees or Contractors - with Products-Completed Operations Coverage Endorsement

This endorsement modifies insurance provided under the following:

COMMERCIAL GENERAL LIABILITY COVERAGE PART

It is understood and agreed as follows:

I. WHO IS AN INSURED is amended to include as an **Insured** any person or organization whom you are required by **written contract** to add as an additional insured on this **Coverage Part**, but only with respect to liability for **bodily injury**, **property damage** or **personal and advertising injury** caused in whole or in part by your acts or omissions, or the acts or omissions of those acting on your behalf:

A. In the performance of your ongoing operations subject to such **written contract**; or

B. In the performance of **your work** subject to such **written contract**, but only with respect to **bodily injury** or **property damage** included in the **products-completed operations hazard**, and only if:

1. The **written contract** requires you to provide the additional insured such coverage; and

2. This **Coverage Part** provides such coverage; and

C. Subject always to the terms and conditions of this policy, including the limits of insurance, the Insurer will not provide such additional insured with:

1. Coverage broader than what you are required to provide by the **written contract**; or

2. A higher limit of insurance than what you are required to provide by the **written contract**. Any coverage granted by this

Paragraph **I.** shall apply solely to the extent permissible by law.

II. If the written contract requires additional insured coverage under the 07-04 edition of CG2010 or CG2037, then paragraph **I.** above is deleted in its entirety and replaced by the following:

WHO IS AN INSURED is amended to include as an **Insured** any person or organization whom you are required by **written contract** to add as an additional insured on this **Coverage Part**, but only with respect to liability for **bodily injury**, **property damage** or **personal and advertising injury** caused in whole or in part by your acts or omissions, or the acts or omissions of those acting on your behalf:

A. In the performance of your ongoing operations subject to such **written contract**; or

B. In the performance of **your work** subject to such **written contract**, but only with respect to **bodily injury** or **property damage** included in the **products-completed operations hazard**, and only if:

1. The **written contract** requires you to provide the additional insured such coverage; and

2. This **Coverage Part** provides such coverage.

III. But if the **written contract** requires:

A. Additional insured coverage under the 11-85 edition, 10-93 edition, or 10-01 edition of CG2010, or under the 1001 edition of CG2037; or

B. Additional insured coverage with “arising out of” language;

then paragraph **I.** above is deleted in its entirety and replaced by the following:

WHO IS AN INSURED is amended to include as an **Insured** any person or organization whom you are required by **written contract** to add as an additional insured on this **Coverage Part**, but only with respect to liability for **bodily injury**, **property damage** or **personal and advertising injury** arising out of **your work** that is subject to such **written contract**.

IV. But if the **written contract** requires additional insured coverage to the greatest extent permissible by law,

Copyright CNA All Rights Reserved

then paragraph **I.** above is deleted in its entirety and replaced by the following:

WHO IS AN INSURED is amended to include as an **Insured** any person or organization whom you are required by **written contract** to add as an additional insured on this **Coverage Part**, but only with respect to liability for **bodily injury**, **property damage** or **personal and advertising injury** arising out of **your work** that is subject to such **written contract**.

V. The insurance granted by this endorsement to the additional insured does not apply to **bodily injury**, **property damage**, or **personal and advertising injury** arising out of:

A. The rendering of, or the failure to render, any professional architectural, engineering, or surveying services, including:

1. The preparing, approving, or failing to prepare or approve maps, shop drawings, opinions, reports, surveys, field orders, change orders or drawings and specifications; and
2. Supervisory, inspection, architectural or engineering activities; or

B. Any premises or work for which the additional insured is specifically listed as an additional insured on another endorsement attached to this **Coverage Part**.

VI. Under **COMMERCIAL GENERAL LIABILITY CONDITIONS,** the Condition entitled **Other Insurance** is amended to add the following, which supersedes any provision to the contrary in this Condition or elsewhere in this **Coverage Part**:

Primary and Noncontributory Insurance

With respect to other insurance available to the additional insured under which the additional insured is a named insured, this insurance is primary to and will not seek contribution from such other insurance, provided that a **written contract** requires the insurance provided by this policy to be:

1. Primary and non-contributing with other insurance available to the additional insured; or
2. Primary and to not seek contribution from any other insurance available to the additional insured. But except as specified above, this insurance will be excess of all other insurance available to the additional insured.

VII. Solely with respect to the insurance granted by this endorsement, the section entitled **COMMERCIAL GENERAL LIABILITY CONDITIONS** is amended as follows:

The Condition entitled **Duties In The Event of Occurrence, Offense, Claim or Suit** is amended with the addition of the following:

Any additional insured pursuant to this endorsement will as soon as practicable:

1. Give the Insurer written notice of any **claim**, or any **occurrence** or offense which may result in a **claim**;
2. Send the Insurer copies of all legal papers received, and otherwise cooperate with the Insurer in the investigation, defense, or settlement of the **claim**; and
3. Make available any other insurance, and endeavor to tender the defense and indemnity of any **claim** to any other insurer or self-insurer, whose policy or program applies to a loss that the Insurer covers under this **coverage part**. However, if the **written contract** requires this insurance to be primary and non-contributory, this paragraph **3.** does not apply to other insurance under which the additional insured is a named insured.

The Insurer has no duty to defend or indemnify an additional insured under this endorsement until the Insurer receives written notice of a **claim** from the additional insured.

VIII. Solely with respect to the insurance granted by this endorsement, the section entitled **DEFINITIONS** is amended to add the following definition:

Copyright CNA All Rights Reserved

CNA PARAMOUNT
Blanket Additional Insured - Owners, Lessees or Contractors - with Products-Completed Operations Coverage Endorsement

Written contract means a written contract or written agreement that requires you to make a person or organization an additional insured on this **Coverage Part**, provided the contract or agreement:

A. Was executed prior to:

1. The **bodily injury** or **property damage**; or
2. The offense that caused the **personal and advertising injury**;

for which the additional insured seeks coverage; and

B. Is still in effect at the time of the **bodily injury** or **property damage occurrence** or **personal and advertising injury** offense.

All other terms and conditions of the Policy remain unchanged.

This endorsement, which forms a part of and is for attachment to the Policy issued by the designated Insurers, takes effect on the effective date of said Policy at the hour stated in said Policy, unless another effective date is shown below, and expires concurrently with said Policy.

Copyright CNA All Rights Reserved

Form **W-9**
(Rev. October 2018)
Department of the Treasury
Internal Revenue Service

Request for Taxpayer Identification Number and Certification

► **Go to *www.irs.gov/FormW9* for instructions and the latest information.**

Give Form to the requester. Do not send to the IRS.

Print or type. See **Specific Instructions** on page 3.

1 Name (as shown on your income tax return). Name is required on this line; do not leave this line blank.

Altura Communication Solutions LLC

2 Business name/disregarded entity name, if different from above

3 Check appropriate box for federal tax classification of the person whose name is entered on line 1. Check only **one** of the following seven boxes.

☐ Individual/sole proprietor or single-member LLC ☐ C Corporation ☐ S Corporation ☐ Partnership ☐ Trust/estate

☑ Limited liability company. Enter the tax classification (C=C corporation, S=S corporation, P=Partnership) ► **P**

Note: Check the appropriate box in the line above for the tax classification of the single-member owner. Do not check LLC if the LLC is classified as a single-member LLC that is disregarded from the owner unless the owner of the LLC is another LLC that is **not** disregarded from the owner for U.S. federal tax purposes. Otherwise, a single-member LLC that is disregarded from the owner should check the appropriate box for the tax classification of its owner.

☐ Other (see instructions) ►

4 Exemptions (codes apply only to certain entities, not individuals; see instructions on page 3):

Exempt payee code (if any) _____

Exemption from FATCA reporting code (if any) _____

(Applies to accounts maintained outside the U.S.)

5 Address (number, street, and apt. or suite no.) See instructions.

110 S. Hartford Ave., Suite 2502

Requester's name and address (optional)

6 City, state, and ZIP code

Tulsa, OK 74120

7 List account number(s) here (optional)

Part I Taxpayer Identification Number (TIN)

Enter your TIN in the appropriate box. The TIN provided must match the name given on line 1 to avoid backup withholding. For individuals, this is generally your social security number (SSN). However, for a resident alien, sole proprietor, or disregarded entity, see the instructions for Part I, later. For other entities, it is your employer identification number (EIN). If you do not have a number, see *How to get a TIN,* later.

Note: If the account is in more than one name, see the instructions for line 1. Also see *What Name and Number To Give the Requester* for guidelines on whose number to enter.

Social security number

			–		–				

or

Employer identification number

3	3	–	0	9	8	8	9	6	7

Part II Certification

Under penalties of perjury, I certify that:

1. The number shown on this form is my correct taxpayer identification number (or I am waiting for a number to be issued to me); and
2. I am not subject to backup withholding because: (a) I am exempt from backup withholding, or (b) I have not been notified by the Internal Revenue Service (IRS) that I am subject to backup withholding as a result of a failure to report all interest or dividends, or (c) the IRS has notified me that I am no longer subject to backup withholding; and
3. I am a U.S. citizen or other U.S. person (defined below); and
4. The FATCA code(s) entered on this form (if any) indicating that I am exempt from FATCA reporting is correct.

Certification instructions. You must cross out item 2 above if you have been notified by the IRS that you are currently subject to backup withholding because you have failed to report all interest and dividends on your tax return. For real estate transactions, item 2 does not apply. For mortgage interest paid, acquisition or abandonment of secured property, cancellation of debt, contributions to an individual retirement arrangement (IRA), and generally, payments other than interest and dividends, you are not required to sign the certification, but you must provide your correct TIN. See the instructions for Part II, later.

Sign Here | **Signature of U.S. person** ► 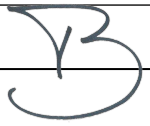 | **Date** ► 1/8/24

General Instructions

Section references are to the Internal Revenue Code unless otherwise noted.

Future developments. For the latest information about developments related to Form W-9 and its instructions, such as legislation enacted after they were published, go to *www.irs.gov/FormW9.*

Purpose of Form

An individual or entity (Form W-9 requester) who is required to file an information return with the IRS must obtain your correct taxpayer identification number (TIN) which may be your social security number (SSN), individual taxpayer identification number (ITIN), adoption taxpayer identification number (ATIN), or employer identification number (EIN), to report on an information return the amount paid to you, or other amount reportable on an information return. Examples of information returns include, but are not limited to, the following.

- Form 1099-INT (interest earned or paid)
- Form 1099-DIV (dividends, including those from stocks or mutual funds)
- Form 1099-MISC (various types of income, prizes, awards, or gross proceeds)
- Form 1099-B (stock or mutual fund sales and certain other transactions by brokers)
- Form 1099-S (proceeds from real estate transactions)
- Form 1099-K (merchant card and third party network transactions)
- Form 1098 (home mortgage interest), 1098-E (student loan interest), 1098-T (tuition)
- Form 1099-C (canceled debt)
- Form 1099-A (acquisition or abandonment of secured property)

Use Form W-9 only if you are a U.S. person (including a resident alien), to provide your correct TIN.

If you do not return Form W-9 to the requester with a TIN, you might be subject to backup withholding. See What is backup withholding, *later.*

Altura_Communication_Solutions_Amendment_2_Packet_purchasing_ready (1)

Interim Agreement Report 2026-01-05

Created:	2025-12-22
By:	RACHEL GABALDON (rdgabaldon@santafenm.gov)
Status:	Out for Signature
Transaction ID:	CBJCHBCAABAAmfqD2d8uWGy6TXRWaeRHE4nFWwBcyDcw

Agreement History

Agreement history is the list of the events that have impacted the status of the agreement prior to the final signature. A final audit report will be generated when the agreement is complete.

"Altura_Communication_Solutions_Amendment_2_Packet_purchasing_ready (1)" History

Document created by RACHEL GABALDON (rdgabaldon@santafenm.gov)
2025-12-22 - 9:38:58 PM GMT- IP address: 63.232.20.2

Document emailed to ajhopkins@santafenm.gov ajhopkins@santafenm.gov (ajhopkins@santafenm.gov) for signature
2025-12-22 - 9:42:59 PM GMT

Email viewed by ajhopkins@santafenm.gov ajhopkins@santafenm.gov (ajhopkins@santafenm.gov)
2026-01-05 - 5:41:25 PM GMT- IP address: 104.47.65.254

Document e-signed by ajhopkins@santafenm.gov ajhopkins@santafenm.gov (ajhopkins@santafenm.gov)
Signature Date: 2026-01-05 - 5:42:21 PM GMT - Time Source: server- IP address: 63.232.20.2

Document sent to JoAnn Lovato (jdlovato@santafenm.gov) and Travis Dutton-Leyda (tkduttonleyda@santafenm.gov) for signature. One of them to sign
2026-01-05 - 5:42:29 PM GMT

Email viewed by Travis Dutton-Leyda (tkduttonleyda@santafenm.gov)
2026-01-05 - 6:14:25 PM GMT- IP address: 63.232.20.2

Email viewed by JoAnn Lovato (jdlovato@santafenm.gov)
2026-01-05 - 6:17:26 PM GMT- IP address: 63.232.20.2

Urgent-GB-350- Altura Communication Solutions LLC

Final Audit Report 2026-01-07

Created:	2026-01-05
By:	ALYSSA PEREZ (aeperez@santafenm.gov)
Status:	Signed
Transaction ID:	CBJCHBCAABAApE8icR650aY-EXX3yN11GOpYeZxAFf-S

"Urgent-GB-350- Altura Communication Solutions LLC" History

Document created by ALYSSA PEREZ (aeperez@santafenm.gov)
2026-01-05 - 8:49:13 PM GMT- IP address: 63.232.20.2

Document sent to JoAnn Lovato (jdlovato@santafenm.gov) and Travis Dutton-Leyda (tkduttonleyda@santafenm.gov) for signature. One of them to sign
2026-01-05 - 8:54:34 PM GMT

Email viewed by Travis Dutton-Leyda (tkduttonleyda@santafenm.gov)
2026-01-05 - 8:54:48 PM GMT- IP address: 174.218.16.74

Email viewed by JoAnn Lovato (jdlovato@santafenm.gov)
2026-01-05 - 10:12:15 PM GMT- IP address: 63.232.20.2

Document e-signed by Travis Dutton-Leyda (tkduttonleyda@santafenm.gov)
Signature Date: 2026-01-06 - 5:28:24 PM GMT - Time Source: server- IP address: 98.97.114.104

Document emailed to BRIAN MOYA (bjmoya@santafenm.gov) for signature
2026-01-06 - 5:28:34 PM GMT

Email viewed by BRIAN MOYA (bjmoya@santafenm.gov)
2026-01-07 - 4:00:46 AM GMT- IP address: 129.222.129.192

Document e-signed by BRIAN MOYA (bjmoya@santafenm.gov)
Signature Date: 2026-01-07 - 4:03:18 AM GMT - Time Source: server- IP address: 129.222.129.192

Agreement completed.
2026-01-07 - 4:03:18 AM GMT

Powered by Adobe Acrobat Sign

CHANDLER, JOSHUA L. (Contractor)

From: MOYA, BRIAN J.
Sent: Friday, January 16, 2026 12:12 PM
To: CHANDLER, JOSHUA L. (Contractor)
Subject: RE: Emergency Approval Request

Approved.

Thank you,
Brian J. Moya

From: CHANDLER, JOSHUA L. (Contractor) <jlchandler@santafenm.gov>
Sent: Friday, January 16, 2026 11:04 AM
To: MOYA, BRIAN J. <bjmoya@santafenm.gov>
Cc: CANDELARIA, ERIC D. <edcandelaria@santafenm.gov>; CONNER, KAYLA M. <kmconner@santafenm.gov>; TAPIA, ERMINIA M. <emtapia@santafenm.gov>; GOMEZ, ERIN A. <eagomez@santafenm.gov>
Subject: Emergency Approval Request

Good morning Chief Moya- Interim City Manager,

The ITT Department respectfully requests your approval to expedite Altura Communication Solutions LLC Amendment 2 through an abbreviated committee review process.

REQUEST: We are seeking approval to present Altura Communication Solutions LLC Amendment 2 to only two committees:

- Finance Committee (01/26/2026)
- Governing Body (01/28/2026)

JUSTIFICATION: This request requires expedited processing due to the urgent nature of the renewal of our Altura Communications software. This renewal was due at the end of December but there were no committee meetings scheduled at the end of 2025. I have attached a reduced version of the Amendment Packet to this email. We appreciate your consideration of this time-sensitive matter and are available to provide any additional information you may require.

Requested Action: Please approve the abbreviated committee review process for Altura Communication Solutions LLC Amendment 2.
You can reply to this email with “Approved”.

Thank you,
Joshua Love Chandler
Contract Administrator
ITT Department/Mouton Hall
OFFICE: 505-955-5519
WORK CELL: 505-629-7314
Email: jlchandler@santafenm.gov

CITY OF SANTA FE
INFORMATION & TECHNOLOGY

CONFIDENTIALITY NOTICE: The contents of this email message and any attachments are intended solely for the addressee(s) and may contain confidential and/or privileged information and may be legally protected from disclosure. If you are not the intended recipient of this message or their agent, or if this message has been addressed to you in error, please immediately alert the sender by reply email and then delete this message and any attachments. If you are not the intended recipient, you are hereby notified that any use, dissemination, copying, or storage of this message or its attachments is strictly prohibited

CITY OF SANTA FE

The Purchasing Memo

Date: December 17, 2025

To: Governing Body, Finance Committee, and Public Works &Utilities Committee

From: Erin Gomez, Contract Administrator

Via: Eric Candeleria, ITT Department Director

Subject: Kronos ERP

Vendor Name: UKG Kronos Systems, LLC

Munis Vendor Number: 10540

ITEM AND ISSUE:

Request for Approval of Additional Telestaff Cloud Storage with UKG Kronos Systems LLC in the Total Amount of $257,267.90 Including NMGRT for the First Year of the Four-Year Term through July 13th, 2029. (Eric Candeleria, ITT Department Director; edcandelaria@santafenm.gov)

CONTRACT NUMBER:

The FY26 Munis contract number is 3260163.

BACKGROUND AND SUMMARY:

The City of Santa Fe has historically procured UKG Kronos Systems LLC services indirectly through their partner company, Immix Group. The City now seeks to establish a direct Sole Source procurement relationship with UKG Kronos Systems LLC. As an industry leader in human resources, payroll, and workforce management solutions, UKG will provide comprehensive services to all City departments, streamlining operations and enhancing administrative efficiency across municipal functions.

PRIOR APPROVALS AND SUPPORTING INFORMATION:

FUNDING SOURCE:

Fund Name/Number: ITT ERP/325

Munis Org Name/Number: ITT ERP/3253950

Munis Object Name/Number: Other Consulting/510340

Budget Officer / Designee: Andy Hopkins **Date:** 01/21/2026

Budget Officer Comment/Exceptions: _____

PROCUREMENT METHOD:

The procurement method used was NMSA 1978, Section 13-1-126, ~~Sole Source~~ CoOp

Chief Procurement Officer (CPO) / Designee: JoAnn Lovato Montaño **Date:** 01/21/2026

CPO Comment/Exceptions: 13-1-135 Cooperative Procurement - NOT 13-1-126 Sole Source.

ASSOCIATED APPROVALS:

IT Components included? ☒ **Yes** | ☐ **No**

Approval: Eric Candelaria (Dec 18, 2025 08:38:06 MST) **Title: ITT Department Director** **Date:** 12/18/2025

Comment/Exceptions: _____

Vehicles included? ☐ **Yes** | ☒ **No**

Approval: _____ **Title:** _____ **Date:** _____

Comment/Exceptions: _____

Construction to City Facilities, Furniture, and/or Fixtures included? ☐ **Yes** | ☒ **No**

Approval: _____ **Title:** _____ **Date:** _____

Comment/Exceptions: _____

Is this an externally funded purchase? ☐ **Yes** | ☒ **No**

If yes, what is the issuing agency: _____

Approval: _____ **Title:** _____ **Date:** _____

Comment/Exceptions: _____

Is this a Capital Asset or Project? ☐ **Yes** | ☒ **No**

Project Ledger Number: _____

Approval: _____ **Title:** _____ **Date:** _____

Comment/Exceptions: _____

ATTACHMENTS:

Linking Agreement to Omnia No. 24-6833

Omnia No. 24-6833 Executive Summary

Quote #323128

COI

W9

Item #: _____
Munis Contract #: 3260163
Original Contract Item #: 25-0454
Omnia Master Agreement #: 24-6833

AMENDMENT No. 1 TO
LINKING AGREEMENT
THE OMNIA MASTER AGREEMENT No. 24-6833
BETWEEN
CITY OF SANTA FE, NEW MEXICO
AND
UKG KRONOS SYSTEMS, LLC

This AMENDMENT No. 1 (the "Amendment") amends the LINKING AGREEMENT for the Omnia Master Agreement No. 24-6833 between the City of Santa Fe, New Mexico and UKG Kronos Systems, LLC ("Contract"), dated September 29, 2025 (the "Agreement"), between the City of Santa Fe (the "City") and UKG Kronos Systems, LLC. (the "Contractor"). The date of this Amendment shall be the date when it is executed by the City and the Contractor, whichever occurs last.

RECITALS:

A. Under the terms of the Contract, Contractor has agreed to provide comprehensive services to all City departments, streamlining operations and enhancing administrative efficiency across municipal functions.

B. Pursuant to Article XII, subsection H, of the Contract, and for good and valuable consideration, the receipt and sufficiency of which are acknowledged by the parties, the City and the Contractor agree as follows:

1. SCOPE:

In the September 29, 2025, Linking Agreement, the Renewal Order Form dated 31 Jul 2025, SaaS section, shall be amended to incorporate additional Telestaff cloud storage capacity.

2. COMPENSATION:

Section II of the Linking Agreement is amended to increase the amount of compensation by a total of $46,114.80 so that Section II reads in its entirety as follows:

The Customer shall pay to UKG in full payment for Services delivered as set forth in this Order and in accordance with the terms of the OMINA Master Agreement. Ther total amount payable to UKG under this Order for the first year, including gross receipt tax and expenses, not to exceed two hundred fifty-seven thousand, two hundred sixty-seven dollars and ninety cents. ($257,267.90). This amount is a maximum for the first year and not guarantee that the work assigned to performed by UKG under this Agreement shall equal the amount stated herein. The Customer shall remit payment in full to UKG on an annual basis in accordance with Order.

3. CONTRACT IN FULL FORCE.

Except as specifically provided in this Amendment, the Contract and Linking Agreement remain and shall remain in full force and effect, in accordance with its terms.

[REMAINDER OF PAGE INTENTIONALLY LEFT BLANK]
[SIGNATURE PAGE TO FOLLOW]

IN WITNESS WHEREOF, the parties have executed this Amendment No. 1 to the Linking Agreement as of the dates set forth below.

CITY OF SANTA FE:

_____

MAYOR

ATTEST:

_____

CITY CLERK

CITY ATTORNEY'S OFFICE:

_____

FRANK RUYBALID, ASSISTANT CITY ATTORNEY

APPROVED FOR FINANCES:

01/21/2026

_____

FINANCE DIRECTOR

CONTRACTOR:

Fabrice Pajot

Fabrice Pajot (Dec 16, 2025 16:29:27 EST)

_____

FABRICE PAJOT
SR. MANAGER ORDER PROCESSING

CITY OF SANTA FE

The Purchasing Memo

Date: September 2, 2025

To: Governing Body, Finance Committee, and Public Works & Utilities Committee

From: Joshua Chandler, Contract Administrator

Via: Eric Candeleria, ITT Department Director EC

Subject: Kronos ERP

Vendor Name: UKG Kronos Systems, LLC

Munis Vendor Number: 10540

ITEM AND ISSUE:

Request for Approval of Citywide Timekeeping and Workforce Management with UKG Kronos Systems LLC in the Total Amount of $211,153.10 Including NMGRT for the First Year of the Four-Year Term through July 13th, 2029. (Eric Candeleria, ITT Department Director; edcandelaria@santafenm.gov)

CONTRACT NUMBER:

The FY26 Munis contract number is 3260163.

BACKGROUND AND SUMMARY:

The City of Santa Fe has historically procured UKG Kronos Systems LLC services indirectly through their partner company, Immix Group. The City now seeks to establish a direct Sole Source procurement relationship with UKG Kronos Systems LLC. As an industry leader in human resources, payroll, and workforce management solutions, UKG will provide comprehensive services to all City departments, streamlining operations and enhancing administrative efficiency across municipal functions.

PRIOR APPROVALS AND SUPPORTING INFORMATION:

FUNDING SOURCE:

Fund Name/Number: ITT ERP/325

Munis Org Name/Number: ITT ERP/3253950

Munis Object Name/Number: Other Consulting/510340

Budget Officer / Designee: Andy Hopkins **Date:** 09/04/2025

Budget Officer Comment/Exceptions: _____

PROCUREMENT METHOD:

The procurement method used was NMSA 1978, Section 13-1-135, Coop

Chief Procurement Officer (CPO) / Designee: _____ **Date:** 09/05/2025

CPO Comment/Exceptions: OMNIA MA 24-6833

ASSOCIATED APPROVALS:

Approval: Eric Candelaria **Title: ITT Department Director** **Date:** 09/04/2025

All components included? ☒ **Yes** | ☐ **No**

Comment/Exceptions: _____

Vehicles included? ☐ **Yes** | ☒ **No**

Approval: _____ **Title:** _____ **Date:** _____

Comment/Exceptions: _____

Construction to City Facilities, Furniture, and/or Fixtures included? ☐ **Yes** | ☒ **No**

Approval: _____ **Title:** _____ **Date:** _____

Comment/Exceptions: _____

Is this an externally funded purchase? ☐ **Yes** | ☒ **No**

If yes, what is the issuing agency: _____

Approval: _____ **Title:** _____ **Date:** _____

Comment/Exceptions: _____

Is this a Capital Asset or Project? ☐ **Yes** | ☒ **No**

Project Ledger Number: _____

Approval: _____ **Title:** _____ **Date:** _____

Comment/Exceptions: _____

ATTACHMENTS:

Linking Agreement to Omnia No. 24-6833

Omnia No. 24-6833 Executive Summary

Quote #322898

COI

W9

LINKING AGREEMENT
THE OMNIA MASTER AGREEMENT No. 24-6833
BETWEEN
CITY OF SANTA FE, NEW MEXICO
AND
UKG KRONOS SYSTEMS, LLC

This Linking Agreement (hereafter the "Linking Agreement"), effective as of the date last signed below ("Effective Date"), to the terms and conditions of the Omnia Master Agreement No. 24-6833 dated July 14, 2025, as amended (the "Omnia Master Agreement"), is entered into by and between UKG Kronos Systems, LLC (hereafter referred to as "UKG") and the City of Santa Fe, New Mexico (hereafter referred to as "Customer"). In consideration of those mutual undertakings and covenants, the parties agree as follows:

SECTION I - INTERPRETATION AND INTENT

All capitalized terms not otherwise defined herein shall have the same meaning as set forth in the Omnia Master Agreement.

The Customer, as an eligible Participating Public Agency, assumes the rights and obligations of the Customer and is subject to the terms and conditions of the Omnia Master Agreement. The terms and conditions of the Omnia Master Agreement, as amended by this Linking Agreement, shall govern when Customer makes purchases of Services under the Omnia Master Agreement. In the event of a conflict between this Linking Agreement and the Omnia Master Agreement, this Linking Agreement shall govern.

The Customer is purchasing and UKG agrees to provide the Services at the price set forth in an applicable Order which is subject to the terms and conditions of the Omnia Master Agreement, as modified by this Linking Agreement.

SECTION II – COMPENSATION

The Customer shall pay to UKG in full payment for Services delivered as set forth in this Order and in accordance with the terms of the OMNIA Master Agreement. The total amount payable to UKG under this Order for the first year, including gross receipts tax and expenses, not to exceed two hundred eleven thousand, one hundred fifty-three dollars and ten cents. ($211,153.10). This amount is a maximum for the first year and not a guarantee that the work assigned to be performed by UKG under this Agreement shall equal the amount stated herein. The Customer shall remit payment in full to UKG on an annual basis in accordance with this Order

SECTION II - TERM

The term of this Linking Agreement commences on the Effective Date and shall run co-terminus with the Omnia Master Agreement, unless otherwise terminated in accordance with the Omnia Master Agreement.

SECTION III – INSURANCE

1. UKG shall procure and maintain, at all times and at its own expense, during the term of the Order entered into between the Customer and UKG, the types of insurance(s) specified below:

A. Commercial General Liability
UKG shall provide coverage on a Commercial General Liability Occurrence Coverage Form limits of $1,000,000.00 each occurrence and $2,000,000.00 annual aggregate. Limits may be achieved via a combination of primary and umbrella/excess insurance. Customer shall be included as an additional insured via blanket endorsement for General Liability and ongoing operations. Such protection shall be primary and non-contributory with respect to Customer's insurance, but only with respect to UKG's sole negligence. Upon written request, such blanket endorsement shall be provided to Customer.

B. Workers' Compensation
UKG shall provide Workers' Compensation Insurance as required by statute.

C. Umbrella/Excess Liability
Limits of liability of $5,000,000 per occurrence.

D. Automobile Liability
Limits of liability of at least $1,000,000 combined single limit, including but not limited to, all owned, hired and non-owned motor vehicles.

E. Professional Liability/Errors & Omissions/Cyber Risk Liability
UKG shall maintain coverage on a Professional Liability Form (or equivalent) in the amount of $5,000,000 per claim with a $5,000,000 annual aggregate.

F. All Risk Property Insurance
UKG shall provide All Risk Property Insurance in an amount not less than the full replacement cost of UKG' property.

G. Miscellaneous
UKG shall supply Customer with the above proof of insurance, as required upon the signing of this Agreement. All insurance companies for each of the coverages set forth above must be rated A- or better with a financial rating of VII or better in the most recent A.M. Best's Rating Guide.

SECTION IV - ADDITIONAL TERMS AND CONDITIONS OF THE CUSTOMER

1. Records and Audit. UKG shall maintain, and Customer and its representatives shall have the right to review all invoices associated with any Order incurred for the services under the Agreement, and similar materials relating to work performed for the Customer under this Agreement on file for at least three (3) years following the date of final payment to UKG by Customer. UKG shall maintain all invoices or applicable records for at least three (3) years following the date of final payment to UKG by Customer. Any duly authorized representative(s) of Customer shall have access to such invoices or applicable records upon a 30 day prior request at reasonable times, during usual and customary business hours.

2. Equal Opportunity Compliance. UKG maintains its commitment to non-discrimination, providing equal opportunity employment and complying with all such requirements and obligations relating to its employees under Applicable Law. Similarly, UKG adheres to its Code of Conduct, which includes non-discrimination requirements and available on our public website at https://www.ukg.com/about-us/esg. If UKG is found not to be in compliance with these requirements during the life of this Agreement, UKG agrees to take appropriate steps to correct these deficiencies.

3. New Mexico Tort Claims Act. Any liability incurred by Customer in connection with this Agreement is, to the extent applicable, subject to the immunities and limitations of the New Mexico Tort Claims Act, Section 41-4-1, et. seq. NMSA 1978, as amended.

4. Governing Law and Venue. This Agreement is governed by and is to be interpreted solely in accordance with the laws of the State of New Mexico, without regard to any conflict of law provision that would result in the application of a different body of law, and each Party agrees to submit to exclusive venue in a court of competent jurisdiction.

IN WITNESS WHEREOF, the parties hereto have executed this Linking Agreement on the dates subscribed below.

CITY OF SANTA FE, NEW MEXICO	**UKG KRONOS SYSTEMS, LLC**
Dated: 09/29/2025	Dated: 8/28/2025 | 10:09 AM EDT
By: Alan Webber (Sep 29, 2025 16:16:20 MDT)	By: Signed by: Fabrice Pajot 7E4599F8AC5945F...
Name: ALAN WEBBER	Name: Fabrice Pajot
Title: MAYOR	Title: Sr Mgr. Order Processing

ATTEST:

ANDREA SALAZAR (Sep 29, 2025 16:18:57 MDT)

ANDREA SALAZAR, CITY CLERK

GB MTG 09-24-25

CITY ATTORNEY'S OFFICE:

ASSISTANT CITY ATTORNEY

APPROVED FOR FINANCES:

Emily K. Oster

EMILY OSTER, FINANCE DIRECTOR

Human Resource Information Systems and Related Products and Services
Executive Summary

Lead Agency: Cobb County

Solicitation: 24-6833

RFP Issued: June 28th, 2024

Pre-Proposal Date: July 10th ,2024

Response Due Date: August 8th, 2024

Proposals Received: #

Awarded to: UKG Kronos Solutions, LLC

Cobb County, GA, Department of Procurement issued RFP #24-6833 on June 28th, 2024, to establish a national cooperative contract for Human Resources Information Systems and Related Products and Solutions.

The solicitation included cooperative purchasing language Page 3 and Exhibit A: Section 1.1:

Page 3:
NATIONAL CONTRACT
Cobb County, GA, as the Principal Procurement Agency, defined in Attachment A, has partnered with OMNIA Partners, Public Sector, Inc., a Delaware corporation ("**OMNIA Partners**") to make the resultant contract (also known as the "**Master Agreement**" in materials distributed by OMNIA Partners) from this solicitation available to other public agencies nationally, including state and local governmental entities, public and private primary, secondary and higher education entities, non-profit entities, and agencies for the public benefit ("**Public Agencies**"), through OMNIA Partners' cooperative purchasing program. Cobb County, GA, is acting as the contracting agency for any other Public Agency that elects to utilize the resulting Master Agreement. Use of the Master Agreement by any Public Agency is preceded by their registration with OMNIA Partners (a "**Participating Public Agency**") and by using the Master Agreement, any such Participating Public Agency agrees that it is registered with OMNIA Partners, whether pursuant to the terms of a Master Intergovernmental Cooperative Purchasing Agreement, a form of which is attached hereto on Attachment A, or as otherwise agreed to. Attachment A contains additional information about OMNIA Partners and the cooperative purchasing program.

Exhibit A: Section 1.1
1.1 Requirement
Cobb County, GA (hereinafter defined and referred to as "**Principal Procurement Agency**"), on behalf of itself and OMNIA Partners, Public Sector, Inc., a Delaware corporation ("**OMNIA Partners**"), is requesting proposals for Human Resource Information Systems and Related Products and Services. The intent of this Request for Proposal is any contract between Principal Procurement Agency and Supplier resulting from this Request for Proposal ("**Master Agreement**") be made available to other public agencies nationally, including state and local governmental entities, public and private primary, secondary and higher education entities, non-profit entities, and agencies for the public benefit ("**Public Agencies**"), through OMNIA Partners' cooperative purchasing

program. The Principal Procurement Agency has executed a Principal Procurement Agency Certificate with OMNIA Partners, an example of which is included as Exhibit D, and has agreed to pursue the Master Agreement. Use of the Master Agreement by any Public Agency is preceded by their registration with OMNIA Partners as a Participating Public Agency in OMNIA Partners' cooperative purchasing program. Registration with OMNIA Partners as a Participating Public Agency is accomplished by Public Agencies entering into a Master Intergovernmental Cooperative Purchasing Agreement, an example of which is attached as Exhibit C, and by using the Master Agreement, any such Participating Public Agency agrees that it is registered with OMNIA Partners, whether pursuant to the terms of the Master Intergovernmental Purchasing Cooperative Agreement or as otherwise agreed to. The terms and pricing established in the resulting Master Agreement between the Supplier and the Principal Procurement Agency will be the same as that available to Participating Public Agencies through OMNIA Partners.

Notice of the solicitation was sent to potential offerors, as well as advertised in the following:

- Cobb County, GA website
- OMNIA Partners website
- USA Today, nationwide
- Arizona Business Gazette, AZ
- San Bernardino County Sun, CA
- Honolulu Star-Advertiser, HI
- The Herald-News – Will County (IL)
- The Advocate – New Orleans, LA
- The New Jersey Herald, NJ
- Albany Times Union, NY
- Daily Journal of Commerce, OR
- The State, SC
- Deseret News, UT
- Richmond Times-Dispatch, VA
- Seattle Daily Journal of Commerce, WA
- Helena Independent Record, MT
- Las Vegas Review-Journal
- Kennebec Journal, ME

On August 8th ,2024 proposals were received from the following offerors:

- Dayforce
- DLT Solutions
- Inovium
- NEOGOV
- UKG Kronos Systems, LLC

The proposals were evaluated by an evaluation committee. Using the evaluation criteria established in the RFP, the committee elected to enter into negotiations with UKG Kronos Systems, LLC and proceed with contract award(s) upon successful completion of negotiations.

Cobb County, GA, OMNIA Partners and UKG Kronos Systems, LLC successfully negotiated a contract, and the Cobb County, GA executed the agreement with a contract effective date of July 14, 2025.

Contract includes: The suppliers provided federal funds certifications which are available on the OMNIA Partners website for review.

Term:

Initial four-year agreement from July 14, 2025, through July 13, 2029, with the option to renew for three (3) additional one-year periods through July 13, 2032.

Pricing/Discount: Available upon request.

RENEWAL ORDER FORM

Quote#: Q-322898

Date:31 Jul, 2025

Customer Legal Name:
CITY OF SANTA FE

Customer Legal Address:
2651 SIRINGO RD, BUILDING F, SANTA FE, NM 87504 USA

Ship To: City of Santa Fe
1600 SAINT MICHAELS DR
SANTA FE, NM 87505-7615 USA

Bill To: City of Santa Fe
1600 SAINT MICHAELS DR
SANTA FE, NM 87505-7615 USA

Bill To Contact:

Payment Terms: Net 30 Days
Customer PO Number:
Renewal Term: 12 months
Billing Frequency: Annual
Billing Type: Advance

Currency:USD
Solution ID: 6140062

Order Notes:

"This Order is subject to the Master Agreement No 24-6833 entered into between Cobb County Board of Commissioner ("Lead Agency") and UKG Kronos Systems, LLC ("UKG") effective as of July 14th, 2025 (the " Omnia Master Agreement No. 24-6833 ") and used by Customer as an Omnia Participating Public Agency."

Contract Summary

Contract Period Start Date: 7/1/2025 12:00:00 AM

Contract Period End Date: 6/30/2026 12:00:00 AM

Total Price: USD 175,222.54

The Total Price is the total billable amount (pre-tax) for the contract period listed above.

Annualized Contract Value: USD 175,032.00

The Annualized Contract Value is the value of the contract if all services are priced for 365 days. The Annualized Contract Value does not include estimated tax. Please note that this quote may include services priced for prorated periods.

SaaS Application

Product Name	Duration	Quantity	Monthly Total	Total Price
UKG PRO TIMEKEEPING HOURLY	12	1,700	USD 10,120.97	USD 121,451.64
UKG PRO LEAVE	12	1,700	USD 2,024.19	USD 24,290.33
UKG PRO WORKFORCE MANAGEMENT NON-PROD	12	1,700	USD 397.92	USD 4,775.02

ADDITIONAL TENANT				
UKG PRO WFM INTEGRATION TO UKG TELESTAFF	12	415	USD 0.00	USD 0.00
UKG PRO WORKFORCE MANAGEMENT ANALYTICS	12	1,700	USD 2,058.80	USD 24,705.55
Total Price				**USD 175,222.54**

City of Santa Fe		UKG Kronos Systems LLC	
Signature:	_____	Signature:	_____
Name:	_____	Name:	_____
Title:	_____	Title:	_____
Date:	_____	Date:	_____

The monthly price on this Order has been rounded to two decimal places for display purposes. As many as eight decimal places may be present in the actual price. Due to the rounding calculations, the actual price may not display as expected when displayed on your Order. Nonetheless, the actual price on your invoice is the true and binding total for this Order for purposes of amounts owed for the term. If you are tax exempt, please email a copy of your "Tax Exempt Certificate" to TaxExemption@ukg.com along with the quote number otherwise this order is subject to applicable taxes. The actual tax amount to be paid by Customer will be shown on Customer's invoice.

UKG is aligning our product brand and announcing that the UKG Dimensions® and UKG Pro® solutions will be one product suite under the name UKG Pro. Click here to learn more and view examples of current to future names

https://www.ukg.com/one-suite#WhatproductnamesarechangingunderUKGDimensions

Payment Terms: Net 30 Days
Currency: USD
Customer PO Number:

Quote Type: Renewal
Customer: CITY OF SANTA FE
Solution ID: 6140062
Contract #: 1202589 R21-NOV-24
Date: 04-AUG-2025
Prepared by: Jeana Spivak / US PublicSector4

Bill To: CITY OF SANTA FE
2651 SIRINGO RD, BUILDING F
SANTA FE NM 87504
UNITED STATES

Ship To: CITY OF SANTA FE
301 MONTEZUMA
SANTA FE NM 87504
UNITED STATES

Contact: RENEE MARTINEZ 12029 COMMUNICATIONS (ITT)
Email:

CONTRACT SUMMARY

Contract Period: 22-MAR-2025 - 21-MAR-2026

Description	Support Services	Estimated Tax	Subtotal
Equipment Support Services	25,130.08	1,225.12	26,355.20
Total	**25,130.08**	**1,225.12**	**26,355.20**

Annualized Contract Value: 25,130.08
The Annualized Contract Value is the value of the contract if all services are priced for 365 days. The Annualized Contract Value does not include estimated tax. Please note that this quote may include services priced for prorated periods.

IMPORTANT NOTES

This Order is subject to the Master Agreement No 24-6833 entered into between Cobb County Board of Commissioner ("Lead Agency") and UKG Kronos Systems, LLC ("UKG") effective as of July 14th, 2025 (the " Omnia Master Agreement No. 24-6833 ") and used by Customer as an Omnia Participating Public Agency.

Support Services are subject to applicable taxes. The tax amount shown on this quote is only an estimate. The actual tax due will be reflected on the invoice.

CITY OF SANTA FE	UKG KRONOS SYSTEMS LLC
Signature:_____	Signature:_____
Name:_____	Name:_____
Title:_____	Title:_____
Date:_____	Date:_____

Quote Type: Renewal
Customer: CITY OF SANTA FE
Solution ID: 6140062
Payment Terms: Net 30 Days
Contract #: 1202589 R21-NOV-24
Currency: USD
Date:
Customer PO Number:
Prepared by: Jeana Spivak / US PublicSector4

Bill To: CITY OF SANTA FE
2651 SIRINGO RD, BUILDING F
SANTA FE NM 87504
UNITED STATES

Ship To: CITY OF SANTA FE
301 MONTEZUMA
SANTA FE NM 87504
UNITED STATES

Contact: PATRICK BOWKER
Email: prbowker@santafenm.gov

EQUIPMENT SUPPORT SERVICES

Line	Support Service Level	Covered Product	Quantity	Start Date	End Date	Duration (days)
1	Depot Exchange	Data Collection: InTouch	76	22-MAR-2025	21-MAR-2026	365
2	Depot Exchange	Options: InTouch	88	22-MAR-2025	21-MAR-2026	365

	Support Services	Estimated Tax	Subtotal
Equipment Support Services	25,130.08	1,225.12	26,355.20

CERTIFICATE OF LIABILITY INSURANCE

DATE (MM/DD/YYYY): 12/04/2024

THIS CERTIFICATE IS ISSUED AS A MATTER OF INFORMATION ONLY AND CONFERS NO RIGHTS UPON THE CERTIFICATE HOLDER. THIS CERTIFICATE DOES NOT AFFIRMATIVELY OR NEGATIVELY AMEND, EXTEND OR ALTER THE COVERAGE AFFORDED BY THE POLICIES BELOW. THIS CERTIFICATE OF INSURANCE DOES NOT CONSTITUTE A CONTRACT BETWEEN THE ISSUING INSURER(S), AUTHORIZED REPRESENTATIVE OR PRODUCER, AND THE CERTIFICATE HOLDER.

IMPORTANT: If the certificate holder is an ADDITIONAL INSURED, the policy(ies) must have ADDITIONAL INSURED provisions or be endorsed. If SUBROGATION IS WAIVED, subject to the terms and conditions of the policy, certain policies may require an endorsement. A statement on this certificate does not confer rights to the certificate holder in lieu of such endorsement(s).

PRODUCER
MARSH USA, LLC.
99 HIGH STREET
BOSTON, MA 02110
Attn: Boston.Certrequest@marsh.com

CN101980216-US-MA-GAWUP-24-

CONTACT NAME: ?
PHONE (A/C, No, Ext): | **FAX (A/C, No):**
E-MAIL ADDRESS:

INSURER(S) AFFORDING COVERAGE	NAIC #
INSURER A : Federal Insurance Company	20281
INSURER B : Great Northern Insurance Company	20303
INSURER C : ACE American Insurance Company	22667
INSURER D : Arch Insurance Company	11150
INSURER E :	
INSURER F :	

INSURED
UKG Inc.
900 Chelmsford Street
Lowell, MA 01851

COVERAGES **CERTIFICATE NUMBER:** NYC-011966145-02 **REVISION NUMBER:** 1

THIS IS TO CERTIFY THAT THE POLICIES OF INSURANCE LISTED BELOW HAVE BEEN ISSUED TO THE INSURED NAMED ABOVE FOR THE POLICY PERIOD INDICATED. NOTWITHSTANDING ANY REQUIREMENT, TERM OR CONDITION OF ANY CONTRACT OR OTHER DOCUMENT WITH RESPECT TO WHICH THIS CERTIFICATE MAY BE ISSUED OR MAY PERTAIN, THE INSURANCE AFFORDED BY THE POLICIES DESCRIBED HEREIN IS SUBJECT TO ALL THE TERMS, EXCLUSIONS AND CONDITIONS OF SUCH POLICIES. LIMITS SHOWN MAY HAVE BEEN REDUCED BY PAID CLAIMS.

INSR LTR	TYPE OF INSURANCE	ADDL INSD	SUBR WVD	POLICY NUMBER	POLICY EFF (MM/DD/YYYY)	POLICY EXP (MM/DD/YYYY)	LIMITS		
A	X COMMERCIAL GENERAL LIABILITY			3606-40-33	12/01/2024	12/01/2025	EACH OCCURRENCE	$	1,000,000
	CLAIMS-MADE X OCCUR						DAMAGE TO RENTED PREMISES (Ea occurrence)	$	1,000,000
							MED EXP (Any one person)	$	10,000
							PERSONAL & ADV INJURY	$	1,000,000
	GEN'L AGGREGATE LIMIT APPLIES PER:						GENERAL AGGREGATE	$	2,000,000
	X POLICY PRO-JECT LOC						PRODUCTS - COMP/OP AGG	$	2,000,000
	OTHER:							$	
B	AUTOMOBILE LIABILITY			7361-70-85	12/01/2024	12/01/2025	COMBINED SINGLE LIMIT (Ea accident)	$	1,000,000
	X ANY AUTO						BODILY INJURY (Per person)	$	
	OWNED AUTOS ONLY / SCHEDULED AUTOS						BODILY INJURY (Per accident)	$	
	HIRED AUTOS ONLY / NON-OWNED AUTOS ONLY						PROPERTY DAMAGE (Per accident)	$	
								$	
A	X UMBRELLA LIAB X OCCUR			7819-27-57	12/01/2024	12/01/2025	EACH OCCURRENCE	$	10,000,000
	EXCESS LIAB CLAIMS-MADE						AGGREGATE	$	10,000,000
	DED X RETENTION $ 10,000							$	
C	WORKERS COMPENSATION AND EMPLOYERS' LIABILITY Y / N			7183-44-74	12/01/2024	12/01/2025	X PER STATUTE OTH-ER		
	ANYPROPRIETOR/PARTNER/EXECUTIVE OFFICER/MEMBER EXCLUDED? N / A						E.L. EACH ACCIDENT	$	1,000,000
	(Mandatory in NH)						E.L. DISEASE - EA EMPLOYEE	$	1,000,000
	If yes, describe under DESCRIPTION OF OPERATIONS below						E.L. DISEASE - POLICY LIMIT	$	1,000,000
D	PROF LIAB / TECH E&O / CYBER			NPL0067548-03	12/01/2024	12/01/2025	Limit:		10,000,000
A	COMMERCIAL PROPERTY			3606-40-33	12/01/2024	12/01/2025	ALL RISK		

DESCRIPTION OF OPERATIONS / LOCATIONS / VEHICLES (ACORD 101, Additional Remarks Schedule, may be attached if more space is required)

CERTIFICATE HOLDER

City of Santa Fe
200 Lincoln Ave
Santa Fe, NM 87501

CANCELLATION

SHOULD ANY OF THE ABOVE DESCRIBED POLICIES BE CANCELLED BEFORE THE EXPIRATION DATE THEREOF, NOTICE WILL BE DELIVERED IN ACCORDANCE WITH THE POLICY PROVISIONS.

AUTHORIZED REPRESENTATIVE

Marsh USA LLC

© 1988-2016 ACORD CORPORATION. All rights reserved.

Form **W-9**
(Rev. October 2018)
Department of the Treasury
Internal Revenue Service

Request for Taxpayer Identification Number and Certification

▶ Go to *www.irs.gov/FormW9* for instructions and the latest information.

Give Form to the requester. Do not send to the IRS.

Print or type. See Specific Instructions on page 3.

1 Name (as shown on your income tax return). Name is required on this line; do not leave this line blank.
UKG Kronos Systems LLC

2 Business name/disregarded entity name, if different from above

3 Check appropriate box for federal tax classification of the person whose name is entered on line 1. Check only one of the following seven boxes.

☐ Individual/sole proprietor or single-member LLC ☑ C Corporation ☐ S Corporation ☐ Partnership ☐ Trust/estate

☐ Limited liability company. Enter the tax classification (C=C corporation, S=S corporation, P=Partnership) ▶ _____

Note: Check the appropriate box in the line above for the tax classification of the single-member owner. Do not check LLC if the LLC is classified as a single-member LLC that is disregarded from the owner unless the owner of the LLC is another LLC that is not disregarded from the owner for U.S. federal tax purposes. Otherwise, a single-member LLC that is disregarded from the owner should check the appropriate box for the tax classification of its owner.

☐ Other (see instructions) ▶

4 Exemptions (codes apply only to certain entities, not individuals; see instructions on page 3):

Exempt payee code (if any) _____

Exemption from FATCA reporting code (if any) _____

(Applies to accounts maintained outside the U.S.)

5 Address (number, street, and apt. or suite no.) See instructions.
900 Chelmsford Street

Requester's name and address (optional)

6 City, state, and ZIP code
Lowell, MA 01851

7 List account number(s) here (optional)

Part I Taxpayer Identification Number (TIN)

Enter your TIN in the appropriate box. The TIN provided must match the name given on line 1 to avoid backup withholding. For individuals, this is generally your social security number (SSN). However, for a resident alien, sole proprietor, or disregarded entity, see the instructions for Part I, later. For other entities, it is your employer identification number (EIN). If you do not have a number, see *How to get a TIN*, later.

Note: If the account is in more than one name, see the instructions for line 1. Also see *What Name and Number To Give the Requester* for guidelines on whose number to enter.

Social security number
[ ][ ][ ] - [ ][ ] - [ ][ ][ ][ ]

or

Employer identification number
0 4 - 2 6 4 0 9 4 2

Part II Certification

Under penalties of perjury, I certify that:

1. The number shown on this form is my correct taxpayer identification number (or I am waiting for a number to be issued to me); and
2. I am not subject to backup withholding because: (a) I am exempt from backup withholding, or (b) I have not been notified by the Internal Revenue Service (IRS) that I am subject to backup withholding as a result of a failure to report all interest or dividends, or (c) the IRS has notified me that I am no longer subject to backup withholding; and
3. I am a U.S. citizen or other U.S. person (defined below); and
4. The FATCA code(s) entered on this form (if any) indicating that I am exempt from FATCA reporting is correct.

Certification instructions. You must cross out item 2 above if you have been notified by the IRS that you are currently subject to backup withholding because you have failed to report all interest and dividends on your tax return. For real estate transactions, item 2 does not apply. For mortgage interest paid, acquisition or abandonment of secured property, cancellation of debt, contributions to an individual retirement arrangement (IRA), and generally, payments other than interest and dividends, you are not required to sign the certification, but you must provide your correct TIN. See the instructions for Part II, later.

Sign Here Signature of U.S. person ▶ Mi Mu Date ▶ 2/12/2024

General Instructions

Section references are to the Internal Revenue Code unless otherwise noted.

Future developments. For the latest information about developments related to Form W-9 and its instructions, such as legislation enacted after they were published, go to *www.irs.gov/FormW9*.

Purpose of Form

An individual or entity (Form W-9 requester) who is required to file an information return with the IRS must obtain your correct taxpayer identification number (TIN) which may be your social security number (SSN), individual taxpayer identification number (ITIN), adoption taxpayer identification number (ATIN), or employer identification number (EIN), to report on an information return the amount paid to you, or other amount reportable on an information return. Examples of information returns include, but are not limited to, the following.

099-INT (interest earned or paid)

- Form 1099-DIV (dividends, including those from stocks or mutual funds)
- Form 1099-MISC (various types of income, prizes, awards, or gross proceeds)
- Form 1099-B (stock or mutual fund sales and certain other transactions by brokers)
- Form 1099-S (proceeds from real estate transactions)
- Form 1099-K (merchant card and third party network transactions)
- Form 1098 (home mortgage interest), 1098-E (student loan interest), 1098-T (tuition)
- Form 1099-C (canceled debt)
- Form 1099-A (acquisition or abandonment of secured property)

Use Form W-9 only if you are a U.S. person (including a resident alien), to provide your correct TIN.

If you do not return Form W-9 to the requester with a TIN, you might be subject to backup withholding. See What is backup withholding, *later.*

Signature: 

Email: xivigil@santafenm.gov

LINKING AGREEMENT
THE OMNIA MASTER AGREEMENT No. 24-6833
BETWEEN
CITY OF SANTA FE, NEW MEXICO
AND
UKG KRONOS SYSTEMS, LLC

This Linking Agreement (hereafter the "Linking Agreement"), effective as of the date last signed below ("Effective Date"), to the terms and conditions of the Omnia Master Agreement No. 24-6833 dated July 14, 2025, as amended (the "Omnia Master Agreement"), is entered into by and between UKG Kronos Systems, LLC (hereafter referred to as "UKG") and the City of Santa Fe, New Mexico (hereafter referred to as "Customer"). In consideration of those mutual undertakings and covenants, the parties agree as follows:

SECTION I - INTERPRETATION AND INTENT
All capitalized terms not otherwise defined herein shall have the same meaning as set forth in the Omnia Master Agreement.

The Customer, as an eligible Participating Public Agency, assumes the rights and obligations of the Customer and is subject to the terms and conditions of the Omnia Master Agreement. The terms and conditions of the Omnia Master Agreement, as amended by this Linking Agreement, shall govern when Customer makes purchases of Services under the Omnia Master Agreement. In the event of a conflict between this Linking Agreement and the Omnia Master Agreement, this Linking Agreement shall govern.

The Customer is purchasing and UKG agrees to provide the Services at the price set forth in an applicable Order which is subject to the terms and conditions of the Omnia Master Agreement, as modified by this Linking Agreement.

SECTION II – COMPENSATION

The Customer shall pay to UKG in full payment for Services delivered as set forth in this Order and in accordance with the terms of the OMNIA Master Agreement. The total amount payable to UKG under this Order for the first year, including gross receipts tax and expenses, not to exceed two hundred eleven thousand, one hundred fifty-three dollars and ten cents. ($211,153.10). This amount is a maximum for the first year and not a guarantee that the work assigned to be performed by UKG under this Agreement shall equal the amount stated herein. The Customer shall remit payment in full to UKG on an annual basis in accordance with this Order

SECTION II - TERM

The term of this Linking Agreement commences on the Effective Date and shall run co-terminus with the Omnia Master Agreement, unless otherwise terminated in accordance with the Omnia Master Agreement.

SECTION III – INSURANCE

1. UKG shall procure and maintain, at all times and at its own expense, during the term of the Order entered into between the Customer and UKG, the types of insurance(s) specified below:

A. Commercial General Liability
UKG shall provide coverage on a Commercial General Liability Occurrence Coverage Form limits of $1,000,000.00 each occurrence and $2,000,000.00 annual aggregate. Limits may be achieved via a combination of primary and umbrella/excess insurance. Customer shall be included as an additional insured via blanket endorsement for General Liability and ongoing operations. Such protection shall be primary and non-contributory with respect to Customer's insurance, but only with respect to UKG's sole negligence. Upon written request, such blanket endorsement shall be provided to Customer.

B. Workers' Compensation
UKG shall provide Workers' Compensation Insurance as required by statute.

C. Umbrella/Excess Liability
Limits of liability of $5,000,000 per occurrence.

D. Automobile Liability
Limits of liability of at least $1,000,000 combined single limit, including but not limited to, all owned, hired and non-owned motor vehicles.

E. Professional Liability/Errors & Omissions/Cyber Risk Liability
UKG shall maintain coverage on a Professional Liability Form (or equivalent) in the amount of $5,000,000 per claim with a $5,000,000 annual aggregate.

F. All Risk Property Insurance
UKG shall provide All Risk Property Insurance in an amount not less than the full replacement cost of UKG' property.

G. Miscellaneous
UKG shall supply Customer with the above proof of insurance, as required upon the signing of this Agreement. All insurance companies for each of the coverages set forth above must be rated A- or better with a financial rating of VII or better in the most recent A.M. Best's Rating Guide.

SECTION IV - ADDITIONAL TERMS AND CONDITIONS OF THE CUSTOMER

1. Records and Audit. UKG shall maintain, and Customer and its representatives shall have the right to review all invoices associated with any Order incurred for the services under the Agreement, and similar materials relating to work performed for the Customer under this Agreement on file for at least three (3) years following the date of final payment to UKG by Customer. UKG shall maintain all invoices or applicable records for at least three (3) years following the date of final payment to UKG by Customer. Any duly authorized representative(s) of Customer shall have access to such invoices or applicable records upon a 30 day prior request at reasonable times, during usual and customary business hours.

2. Equal Opportunity Compliance. UKG maintains its commitment to non-discrimination, providing equal opportunity employment and complying with all such requirements and obligations relating to its employees under Applicable Law. Similarly, UKG adheres to its Code of Conduct, which includes non-discrimination requirements and available on our public website at https://www.ukg.com/about-us/esg. If UKG is found not to be in compliance with these requirements during the life of this Agreement, UKG agrees to take appropriate steps to correct these deficiencies.

3. New Mexico Tort Claims Act. Any liability incurred by Customer in connection with this Agreement is, to the extent applicable, subject to the immunities and limitations of the New Mexico Tort Claims Act, Section 41-4-1, et. seq. NMSA 1978, as amended.

4. Governing Law and Venue. This Agreement is governed by and is to be interpreted solely in accordance with the laws of the State of New Mexico, without regard to any conflict of law provision that would result in the application of a different body of law, and each Party agrees to submit to exclusive venue in a court of competent jurisdiction.

IN WITNESS WHEREOF, the parties hereto have executed this Linking Agreement on the dates subscribed below.

CITY OF SANTA FE, NEW MEXICO	**UKG KRONOS SYSTEMS, LLC**
Dated: 09/29/2025	Dated: 8/28/2025 | 10:09 AM EDT
By: Alan Webber (Sep 29, 2025 16:16:20 MDT)	By: Signed by: Fabrice Pajot 7E4599F8AC5945F...
Name: ALAN WEBBER	Name: Fabrice Pajot
Title: MAYOR	Title: Sr Mgr. Order Processing

ATTEST:

ANDREA SALAZAR (Sep 29, 2025 16:18:57 MDT)

ANDREA SALAZAR, CITY CLERK

GB MTG 09-24-25

CITY ATTORNEY'S OFFICE:

ASSISTANT CITY ATTORNEY

APPROVED FOR FINANCES:

Emily K. Oster

EMILY OSTER, FINANCE DIRECTOR

RENEWAL ORDER FORM

Quote#: Q-323128

Date:10 Sep, 2025

Customer Legal Name:
SANTA FE FIRE

Customer Legal Address:
35 CAMINO JUSTICIA, SANTA FE, NM 87508-8501 USA

Ship To: City of Santa Fe
1600 SAINT MICHAELS DR
SANTA FE, NM 87505-7615 USA

Bill To: CITY OF SANTA FE
1600 SAINT MICHAELS DR
SANTA FE, NM 87505-7615 USA

Bill To Contact:

Payment Terms: Net 30 Days
Customer PO Number:
Renewal Term: 12 months
Billing Frequency: Monthly
Billing Type: Arrears

Currency:USD
Solution ID: 6105679

Contract Summary

Contract Period Start Date: 7/1/2025 12:00:00 AM

Contract Period End Date: 6/30/2026 12:00:00 AM

Total Price: USD 46,114.80

The Total Price is the total billable amount (pre-tax) for the contract period listed above.

Annualized Contract Value: USD 46,114.80

The Annualized Contract Value is the value of the contract if all services are priced for 365 days. The Annualized Contract Value does not include estimated tax. Please note that this quote may include services priced for prorated periods.

SaaS Application

Product Name	Duration	Quantity	Monthly Total	Total Price
UKG TELESTAFF CLOUD	12	415	USD 3,842.90	USD 46,114.80
Total Price				**USD 46,114.80**

CITY OF SANTA FE		UKG Kronos Systems LLC	
Signature:	_____	Signature:	_____
Name:	_____	Name:	_____
Title:	_____	Title:	_____
Date:	_____	Date:	_____

The monthly price on this Order has been rounded to two decimal places for display purposes. As many as eight decimal places may be present in the actual price. Due to the rounding calculations, the actual price may not display as expected when displayed on your Order. Nonetheless, the actual price on your invoice is the true and binding total for this Order for purposes of amounts owed for the term. If you are tax exempt, please email a copy of your "Tax Exempt Certificate" to TaxExemption@ukg.com along with the quote number otherwise this order is subject to applicable taxes. The actual tax amount to be paid by Customer will be shown on Customer's invoice.

UKG is aligning our product brand and announcing that the UKG Dimensions® and UKG Pro® solutions will be one product suite under the name UKG Pro. Click here to learn more and view examples of current to future names

https://www.ukg.com/one-suite#WhatproductnamesarechangingunderUKGDimensions

CERTIFICATE OF LIABILITY INSURANCE

DATE (MM/DD/YYYY): 12/01/2025

THIS CERTIFICATE IS ISSUED AS A MATTER OF INFORMATION ONLY AND CONFERS NO RIGHTS UPON THE CERTIFICATE HOLDER. THIS CERTIFICATE DOES NOT AFFIRMATIVELY OR NEGATIVELY AMEND, EXTEND OR ALTER THE COVERAGE AFFORDED BY THE POLICIES BELOW. THIS CERTIFICATE OF INSURANCE DOES NOT CONSTITUTE A CONTRACT BETWEEN THE ISSUING INSURER(S), AUTHORIZED REPRESENTATIVE OR PRODUCER, AND THE CERTIFICATE HOLDER.

IMPORTANT: If the certificate holder is an ADDITIONAL INSURED, the policy(ies) must have ADDITIONAL INSURED provisions or be endorsed. If SUBROGATION IS WAIVED, subject to the terms and conditions of the policy, certain policies may require an endorsement. A statement on this certificate does not confer rights to the certificate holder in lieu of such endorsement(s).

PRODUCER MARSH USA, LLC. 99 HIGH STREET BOSTON, MA 02110 Attn: Boston.Certrequest@marsh.com CN101980216-US-MA-GAWUP-25-	**CONTACT NAME:** ? **PHONE (A/C, No, Ext):** **FAX (A/C, No):** **E-MAIL ADDRESS:**
INSURED UKG Inc. 900 Chelmsford Street Lowell, MA 01851	**INSURER(S) AFFORDING COVERAGE** — **NAIC #** **INSURER A :** Federal Insurance Company — 20281 **INSURER B :** Great Northern Insurance Company — 20303 **INSURER C :** ACE American Insurance Company — 22667 **INSURER D :** Arch Insurance Company — 11150 **INSURER E :** **INSURER F :**

COVERAGES **CERTIFICATE NUMBER:** NYC-011966145-04 **REVISION NUMBER:** 1

THIS IS TO CERTIFY THAT THE POLICIES OF INSURANCE LISTED BELOW HAVE BEEN ISSUED TO THE INSURED NAMED ABOVE FOR THE POLICY PERIOD INDICATED. NOTWITHSTANDING ANY REQUIREMENT, TERM OR CONDITION OF ANY CONTRACT OR OTHER DOCUMENT WITH RESPECT TO WHICH THIS CERTIFICATE MAY BE ISSUED OR MAY PERTAIN, THE INSURANCE AFFORDED BY THE POLICIES DESCRIBED HEREIN IS SUBJECT TO ALL THE TERMS, EXCLUSIONS AND CONDITIONS OF SUCH POLICIES. LIMITS SHOWN MAY HAVE BEEN REDUCED BY PAID CLAIMS.

INSR LTR	TYPE OF INSURANCE	ADDL INSD	SUBR WVD	POLICY NUMBER	POLICY EFF (MM/DD/YYYY)	POLICY EXP (MM/DD/YYYY)	LIMITS	
A	X **COMMERCIAL GENERAL LIABILITY** CLAIMS-MADE X OCCUR GEN'L AGGREGATE LIMIT APPLIES PER: X POLICY PRO-JECT LOC OTHER:			3606-40-33	12/01/2025	12/01/2026	EACH OCCURRENCE DAMAGE TO RENTED PREMISES (Ea occurrence) MED EXP (Any one person) PERSONAL & ADV INJURY GENERAL AGGREGATE PRODUCTS - COMP/OP AGG 	$ 1,000,000 $ 1,000,000 $ 10,000 $ 1,000,000 $ 2,000,000 $ 2,000,000 $
B	**AUTOMOBILE LIABILITY** X ANY AUTO OWNED AUTOS ONLY HIRED AUTOS ONLY SCHEDULED AUTOS NON-OWNED AUTOS ONLY			7361-70-85	12/01/2025	12/01/2026	COMBINED SINGLE LIMIT (Ea accident) BODILY INJURY (Per person) BODILY INJURY (Per accident) PROPERTY DAMAGE (Per accident) 	$ 1,000,000 $ $ $ $
A	X **UMBRELLA LIAB** X OCCUR **EXCESS LIAB** CLAIMS-MADE DED X RETENTION $ 10,000			7819-27-57	12/01/2025	12/01/2026	EACH OCCURRENCE AGGREGATE 	$ 10,000,000 $ 10,000,000 $
C	**WORKERS COMPENSATION AND EMPLOYERS' LIABILITY** Y / N ANYPROPRIETOR/PARTNER/EXECUTIVE OFFICER/MEMBER EXCLUDED? N **(Mandatory in NH)** If yes, describe under DESCRIPTION OF OPERATIONS below	N / A		7183-44-74	12/01/2025	12/01/2026	X PER STATUTE OTH-ER E.L. EACH ACCIDENT E.L. DISEASE - EA EMPLOYEE E.L. DISEASE - POLICY LIMIT	 $ 1,000,000 $ 1,000,000 $ 1,000,000
D	PROF LIAB / TECH E&O / CYBER			NPL0067548-04	12/01/2025	12/01/2026	Limit:	10,000,000
A	COMMERCIAL PROPERTY			3606-40-33	12/01/2025	12/01/2026	ALL RISK	

DESCRIPTION OF OPERATIONS / LOCATIONS / VEHICLES (ACORD 101, Additional Remarks Schedule, may be attached if more space is required)

CERTIFICATE HOLDER

City of Santa Fe
200 Lincoln Ave
Santa Fe, NM 87501

CANCELLATION

SHOULD ANY OF THE ABOVE DESCRIBED POLICIES BE CANCELLED BEFORE THE EXPIRATION DATE THEREOF, NOTICE WILL BE DELIVERED IN ACCORDANCE WITH THE POLICY PROVISIONS.

AUTHORIZED REPRESENTATIVE

Marsh USA LLC

© 1988-2016 ACORD CORPORATION. All rights reserved.

Form **W-9**
(Rev. October 2018)
Department of the Treasury
Internal Revenue Service

Request for Taxpayer Identification Number and Certification

▶ Go to *www.irs.gov/FormW9* for instructions and the latest information.

Give Form to the requester. Do not send to the IRS.

Print or type. See Specific Instructions on page 3.

1 Name (as shown on your income tax return). Name is required on this line; do not leave this line blank.
UKG Kronos Systems LLC

2 Business name/disregarded entity name, if different from above

3 Check appropriate box for federal tax classification of the person whose name is entered on line 1. Check only one of the following seven boxes.

☐ Individual/sole proprietor or single-member LLC ☑ C Corporation ☐ S Corporation ☐ Partnership ☐ Trust/estate

☐ Limited liability company. Enter the tax classification (C=C corporation, S=S corporation, P=Partnership) ▶ _____

Note: Check the appropriate box in the line above for the tax classification of the single-member owner. Do not check LLC if the LLC is classified as a single-member LLC that is disregarded from the owner unless the owner of the LLC is another LLC that is **not** disregarded from the owner for U.S. federal tax purposes. Otherwise, a single-member LLC that is disregarded from the owner should check the appropriate box for the tax classification of its owner.

☐ Other (see instructions) ▶

4 Exemptions (codes apply only to certain entities, not individuals; see instructions on page 3):

Exempt payee code (if any) _____

Exemption from FATCA reporting code (if any) _____

(Applies to accounts maintained outside the U.S.)

5 Address (number, street, and apt. or suite no.) See instructions.
900 Chelmsford Street

Requester's name and address (optional)

6 City, state, and ZIP code
Lowell, MA 01851

7 List account number(s) here (optional)

Part I Taxpayer Identification Number (TIN)

Enter your TIN in the appropriate box. The TIN provided must match the name given on line 1 to avoid backup withholding. For individuals, this is generally your social security number (SSN). However, for a resident alien, sole proprietor, or disregarded entity, see the instructions for Part I, later. For other entities, it is your employer identification number (EIN). If you do not have a number, see *How to get a TIN*, later.

Note: If the account is in more than one name, see the instructions for line 1. Also see *What Name and Number To Give the Requester* for guidelines on whose number to enter.

Social security number
☐☐☐ – ☐☐ – ☐☐☐☐

or

Employer identification number
0 4 – 2 6 4 0 9 4 2

Part II Certification

Under penalties of perjury, I certify that:

1. The number shown on this form is my correct taxpayer identification number (or I am waiting for a number to be issued to me); and
2. I am not subject to backup withholding because: (a) I am exempt from backup withholding, or (b) I have not been notified by the Internal Revenue Service (IRS) that I am subject to backup withholding as a result of a failure to report all interest or dividends, or (c) the IRS has notified me that I am no longer subject to backup withholding; and
3. I am a U.S. citizen or other U.S. person (defined below); and
4. The FATCA code(s) entered on this form (if any) indicating that I am exempt from FATCA reporting is correct.

Certification instructions. You must cross out item 2 above if you have been notified by the IRS that you are currently subject to backup withholding because you have failed to report all interest and dividends on your tax return. For real estate transactions, item 2 does not apply. For mortgage interest paid, acquisition or abandonment of secured property, cancellation of debt, contributions to an individual retirement arrangement (IRA), and generally, payments other than interest and dividends, you are not required to sign the certification, but you must provide your correct TIN. See the instructions for Part II, later.

Sign Here Signature of U.S. person ▶ [signature] Date ▶ 2/12/2024

General Instructions

Section references are to the Internal Revenue Code unless otherwise noted.

Future developments. For the latest information about developments related to Form W-9 and its instructions, such as legislation enacted after they were published, go to *www.irs.gov/FormW9*.

Purpose of Form

An individual or entity (Form W-9 requester) who is required to file an information return with the IRS must obtain your correct taxpayer identification number (TIN) which may be your social security number (SSN), individual taxpayer identification number (ITIN), adoption taxpayer identification number (ATIN), or employer identification number (EIN), to report on an information return the amount paid to you, or other amount reportable on an information return. Examples of information returns include, but are not limited to, the following.

099-INT (interest earned or paid)

- Form 1099-DIV (dividends, including those from stocks or mutual funds)
- Form 1099-MISC (various types of income, prizes, awards, or gross proceeds)
- Form 1099-B (stock or mutual fund sales and certain other transactions by brokers)
- Form 1099-S (proceeds from real estate transactions)
- Form 1099-K (merchant card and third party network transactions)
- Form 1098 (home mortgage interest), 1098-E (student loan interest), 1098-T (tuition)
- Form 1099-C (canceled debt)
- Form 1099-A (acquisition or abandonment of secured property)

Use Form W-9 only if you are a U.S. person (including a resident alien), to provide your correct TIN.

If you do not return Form W-9 to the requester with a TIN, you might be subject to backup withholding. See What is backup withholding, *later.*

Urgent-GB-350-UKG_Linking_Agreement_Amendment_1_Packet_-Signed_ (2)

Interim Agreement Report 2026-01-21

Created:	2026-01-21
By:	ALYSSA PEREZ (aeperez@santafenm.gov)
Status:	Out for Signature
Transaction ID:	CBJCHBCAABAAIq2p_sl9opNl14B39sGVsBREbhx12jLh

Agreement History

Agreement history is the list of the events that have impacted the status of the agreement prior to the final signature. A final audit report will be generated when the agreement is complete.

"Urgent-GB-350-UKG_Linking_Agreement_Amendment_1_Packet_-Signed_ (2)" History

Document created by ALYSSA PEREZ (aeperez@santafenm.gov)
2026-01-21 - 3:49:24 PM GMT- IP address: 63.232.20.2

Document emailed to ajhopkins@santafenm.gov ajhopkins@santafenm.gov (ajhopkins@santafenm.gov) for signature
2026-01-21 - 3:51:25 PM GMT

Email viewed by ajhopkins@santafenm.gov ajhopkins@santafenm.gov (ajhopkins@santafenm.gov)
2026-01-21 - 7:14:18 PM GMT- IP address: 104.47.64.254

Document e-signed by ajhopkins@santafenm.gov ajhopkins@santafenm.gov (ajhopkins@santafenm.gov)
Signature Date: 2026-01-21 - 8:21:14 PM GMT - Time Source: server- IP address: 63.232.20.129

Document sent to JoAnn Lovato (jdlovato@santafenm.gov) and Travis Dutton-Leyda (tkduttonleyda@santafenm.gov) for signature. One of them to sign
2026-01-21 - 8:21:18 PM GMT

Email viewed by Travis Dutton-Leyda (tkduttonleyda@santafenm.gov)
2026-01-21 - 8:21:24 PM GMT- IP address: 62.10.205.18

Email viewed by JoAnn Lovato (jdlovato@santafenm.gov)
2026-01-21 - 8:40:14 PM GMT- IP address: 73.228.7.52

CHANDLER, JOSHUA L. (Contractor)

From: MOYA, BRIAN J.
Sent: Wednesday, January 21, 2026 3:23 PM
To: CHANDLER, JOSHUA L. (Contractor)
Cc: SENA, BERNICE M.; CANDELARIA, ERIC D.; CONNER, KAYLA M.; TAPIA, ERMINIA M.; GOMEZ, ERIN A.
Subject: Re: Emergency Approval Request

Approved please proceed

Fire Chief / Brian J Moya
Santa Fe Fire Department
200 Murales Rd. |Santa Fe, NM 87504
Office: (505) 955-3111
Mobile: (505) 467-9803
Bjmoya@santafenm.gov

From: CHANDLER, JOSHUA L. (Contractor) <jlchandler@santafenm.gov>
Sent: Wednesday, January 21, 2026 3:14:21 PM
To: MOYA, BRIAN J. <bjmoya@santafenm.gov>
Cc: SENA, BERNICE M. <bmsena@santafenm.gov>; CANDELARIA, ERIC D. <edcandelaria@santafenm.gov>; CONNER, KAYLA M. <kmconner@santafenm.gov>; TAPIA, ERMINIA M. <emtapia@santafenm.gov>; GOMEZ, ERIN A. <eagomez@santafenm.gov>
Subject: Emergency Approval Request

Good afternoon Chief Moya- Interim City Manager,

The ITT Department respectfully requests your approval to expedite UKG Kronos Systems, LLC Amendment 1 through an abbreviated committee review process.

REQUEST: We are seeking approval to present UKG Kronos Systems, LLC Amendment 1 to only two committees:

- Finance Committee (01/26/2026)
- Governing Body (01/28/2026)

JUSTIFICATION: This request requires expedited processing due to the urgent nature of our addition of Telestaff cloud storage as well as the urgency to produce a purchase order for UKG Kronos Systems. We appreciate your consideration of this time-sensitive matter and are available to provide any additional information you may require.

Requested Action: Please approve the abbreviated committee review process for UKG Kronos Systems, LLC Amendment 1.
You can reply to this email with “Approved”.

Thank you,

Joshua Love Chandler
Contract Administrator
ITT Department/Mouton Hall
OFFICE: 505-955-5519
WORK CELL: 505-629-7314
Email: jlchandler@santafenm.gov

CITY OF SANTA FE
INFORMATION & TECHNOLOGY

CONFIDENTIALITY NOTICE: The contents of this email message and any attachments are intended solely for the addressee(s) and may contain confidential and/or privileged information and may be legally protected from disclosure. If you are not the intended recipient of this message or their agent, or if this message has been addressed to you in error, please immediately alert the sender by reply email and then delete this message and any attachments. If you are not the intended recipient, you are hereby notified that any use, dissemination, copying, or storage of this message or its attachments is strictly prohibited

CITY OF SANTA FE

Date: October 11, 2025

To: Sam Burnett, Interim Public Works Director

From: Christine Chavez, CSD Director CyC

Via: Mark Scott, City Manager MS (Mark Scott)

Jesse Roach, Public Utilities Director JR (Jesse Roach)

Subject: Initiation of Remodel for new CSD Building (Carlos Ortega Center)

The Conservation and Sustainability Division (CSD) is in the process of developing a formal cost split for CSD start-up and ongoing activity costs between the Utility Enterprise Funds and the General Fund. While that structure is being developed, and in the interest of moving things forward as quickly as possible, the Water Division has agreed to cover all costs associated with the remodel until the cost share has been formalized. Once finalized, the Water Division may be reimbursed for expenditures as appropriate.

Please proceed with initiating the remodel per the cost estimate prepared by the Facilities Division dated October 6, 2025. The approved scope includes:

- Roof, stucco, and exterior repairs;
- Replacement of HVAC units and upgrades to the fire alarm system;
- Removal of the kitchen hood and interior clearing;
- Installation of new windows, interior walls, and doors;
- Furniture layout and procurement per Creative Interiors design plans;
- Electrical and data upgrades.

The total project cost, inclusive of a 15% contingency, is $525,385.71.

A Budget Adjustment Request (BAR) will be prepared and moved through the Governing Body for approval. However, as discussed, with this agreement in place, the remodel may begin right away so that the team can move in as anticipated before the end of the year.

Thank you for your continued partnership and support in preparing this space for the new Conservation and Sustainability Division.

Signature: JR

Email: jdroach@santafenm.gov

Signature: Mark Scott (Oct 20, 2025 17:42:15 PDT)

Email: mscott@santafenm.gov

Log # *{Finance use only}*:	
Journal # *{Finance use only}*:	

City of Santa Fe, New Mexico
BUDGET AMENDMENT RESOLUTION (BAR)

DEPARTMENT / DIVISION NAME	DATE
Public Utilities / Water	10/28/2025

ITEM DESCRIPTION	ORG	OBJECT	PROJECT	INCREASE	DECREASE
EXPENDITURES				*{enter as positive #}*	*{enter as negative #}*
Remodeling and Replacement	5050382	572500		525,386	
REVENUES				*{enter as negative #}*	*{enter as positive #}*
				$ 525,386	$ -

JUSTIFICATION: *(use additional page if needed)*
--Attach supporting documentation/memo

Remodel of City facility to house the newly created Conservation and Sustainability Division in the old Teen Center

{Complete section below if BAR results in a net change to ANY Fund}	
Fund(s) Affected	Fund Balance Increase/(Decrease)
505	(525,386)
TOTAL:	**(525,386)**

Nancy L Jimenez — 11/20/2025
Prepared By *{print name}* — Date

Christine Chavez — 11/20/2025
Division Director Signature *{optional}* — Date

11/20/2025
Department Director Signature — Date

{Use this form for Finance Committee/ City Council agenda items ONLY}

CITY COUNCIL APPROVAL

City Council Approval Date

Agenda Item #:

Andy Hopkins — 11/20/2025
Budget Officer — Date

Emily K. Oster — 11/20/2025
Finance Director *{≤ $5,000}* — Date

Mark Scott (Nov 21, 2025 15:59:35 MST) — 11/21/2025
City Manager *{≤ $60,000}* — Date

CITY OF SANTA FE

The Purchasing Memo

Date: November 25, 2025

To: Governing Body, Finance Committee, and Public Works & Utilities Committee

From: Efren Morales, WWM Plant Manager EFREN MORALES (Nov 25, 2025 15:43:09 MST)

Via: Michael Dozier, Wastewater Division Director

Via: Jesse Roach, Acting Public Utilities Department Director

Subject: Settleability and Phosphorus Removal Chemical Aid Purchase (goods)

Vendor Name: Brenntag Pacific, Inc.

Munis Vendor Number: 10943

ITEM AND ISSUE:

The Santa Fe Public Utilities Department respectfully requests your review and approval of a General Services Contract for Goods and Services in the total amount of $4,000,000.00, including gross receipts tax for the purchase of a chemical aid to enhance settleability of mixed liquor suspended solids and increase phosphorus removal within the activated sludge wastewater treatment process for a term of four years with Brenntag Pacific, Inc.

The Waste Management Division respectfully requests your approval of a Budget Adjustment Resolution (BAR) in the amount of $1,000,000 from Enterprise funds to Operating Supplies.

CONTRACT NUMBER:

The FY26 Munis contract number is **3260246**

BACKGROUND AND SUMMARY:

Invitation to Bid (ITB) number 25114 completed 30 April 2025, lists the price of the chemical (Brenn floc 5000) as $8.93 per gallon. The dosing rate, that was recommended to us from our engineers to treat an average of 5 million gallons of wastewater per day, is 261 gallons of the chemical. Multiplied by 365.25 days in a year the dosing total is 95,330 gallons per year. This totals $851,296.90 per year excluding taxes. With $69,699.93 in taxes at the rate of 8.1875% the grand total per year is $920,996.83. The contract including gross receipts tax and expenses shall not exceed $1,000,000.00 per year.

.

PRIOR APPROVALS AND SUPPORTING INFORMATION:

FUNDING SOURCE:

Fund Name/Number: Wastewater Management -500

Munis Org Name/Number: WW Treatment Plant -5000367

Munis Object Name/Number: Operating Supplies-530200

Budget Officer / Designee: Andy Hopkins **Date:** 12/04/2025

Budget Officer Comment/Exceptions: _____

PROCUREMENT METHOD:

The procurement method used was NMSA 1978, Section 13-1-102, ITB

An Invitation to Bid (25114) was advertised on 26 March 2025 and three vendors (Brenntag Pacific, Inc., Thatcher Company, Inc. and USALCO) responded. Each vendor had to test their chemical on site to determine if it could assist settling and remove all phosphorus from the Paseo Real wastewater. All three vendors had a chemical that could do the job, so they were all accepted. Finally, all vendors sent a sample of their chemical so that it could be tested to use the smallest amount possible. Of the three, only Brenntag was selected because it had the only chemical that could eliminate all phosphorus with a single tote per day.

Chief Procurement Officer (CPO)/Designee: _____ **Date:** 12/08/2025

CPO Comment/Exceptions: _____

ASSOCIATED APPROVALS:

IT Components included? ☐ Yes | ☒ No

Approval: _____ **Title:** _____ **Date:** _____

Comment/Exceptions: _____

Treasury/Point of Sale Components included? ☐ Yes | ☒ No

Approval: _____ **Title:** _____ **Date:** _____

Comment/Exceptions: _____

Vehicles included? ☐ Yes | ☒ No

Approval: _____ **Title:** _____ **Date:** _____

Comment/Exceptions: _____

Construction to City Facilities, Furniture, and/or Fixtures included? ☐ Yes | ☒ No

Approval: _____ **Title:** _____ **Date:** _____

Comment/Exceptions: _____

Is this an externally funded purchase? ☐ Yes | ☒ No

If yes, what is the issuing agency: _____

Approval: _____ **Title:** _____ **Date:** _____

Comment/Exceptions: _____

Is this a Capital Asset or Project? ☐ Yes | ☒ No

Project Ledger Number: _____

Approval: _____ **Title:** _____ **Date:** _____

Comment/Exceptions: _____

ATTACHMENTS:
Vendor's Bid
General Services Contract

Item #: _____
Munis Contract #: _____
SWPA/GSA/Coop/RFP/ITB #: _____

CITY OF SANTA FE
GENERAL SERVICES CONTRACT

Goods and Services

THIS CONTRACT is made and entered into by and between the City of Santa Fe, herein after referred to as the "City," and **Brenntag Pacific, Inc.** herein after referred to as the "Contractor."

IT IS MUTUALLY AGREED BETWEEN THE PARTIES:

1. **Definitions**

A. "Products and Services Schedule" refers to the complete list of products and services offered under this Contract and the price for each. Product and service descriptions may be amended with the prior approval of the Contract Administrator. New products and services shall not be added to the Products and Services Schedule.

B. "Business Hours" means 8:00 a.m. to 5:00 p.m. Mountain Time.

2. **Scope of Work**

- The Contractor shall perform the following work:
  - PROCESS DESCRIPTION
    - The Paseo Real Wastewater Treatment Facility ("PRWWTF"), owned by the City, has a permitted capacity of 13 million gallons per day ("mgd") as average daily maximum month flow ("ADMMF") and discharges into the lower Santa Fe River.
    - The activated sludge treatment process utilizes microorganisms to remove organic matter and other pollutants from wastewater. The secondary treatment infrastructure includes two anoxic bioselectors (each including two cells that can operated as aerobic or anoxic), followed by two aeration basins (each of which is a four-pass carrousel oxidation ditch, followed by six secondary clarifiers used to separate mixed liquor suspended solids ("MLSS") from secondary effluent.
  - CHEMICAL AID
    - The City is seeking chemical aid to enhance settleability of MLSS and increase phosphorus removal within the activated sludge wastewater treatment process.
    - Aluminum-based chemical aids are acceptable but iron-based chemical aids such as ferric chloride are not acceptable.
    - The chemical aid shall meet the following performance criteria:
      - MLSS sludge volume index ("SVI") (30-minute test) less than or equal to 100 mL/g using a standard 2-liter SVI settleometer test.
      - Supernatant Total Phosphorus ("TP") must be less than or equal to 2.5 mg/L as P.

    - Supernatant Total Suspended Solids ("TSS") must be less than or equal to 20 mg/L.
  - Minimum product storage life shall be 3 months.
  - The Contractor must offer technical support regarding their product when requested by the City.
- SPECIFICATIONS
  - The on-call contract will be contingent upon continued performance in compliance with the minimum specifications outlined herein and in accordance with the initial performance test results. If for any reason the performance of this product degrades, the City reserves the right to cancel the on-call contract(s). However, the Contractor will receive written notification not less than thirty (30) days prior to contract cancellation and will have the opportunity to troubleshoot and make recommendations to achieve satisfactory performance.
  - The City will make reasonable efforts to comply with the Contractor's recommendations but reserves the right to make the ultimate determination about product effectiveness and contract cancellation, if required. Contract cancellation will be in effect thirty (30) days from the date of written notice unless the City withdraws the cancellation notice.
- DELIVERY CONDITIONS
  - Chemical can be delivered in pallet-based totes of 275 or 330 gallons, by refill of delivered totes left on site with the use of a tanker, or in portable tankers provided by the Contractor that can be left on site and swapped out.
  - If chemical is delivered in totes, PRWWTF staff will unload the totes to storage and make totes available if Contractor is able to refill them on site.
  - Each chemical delivery shall contain a minimum of 2,750 – 3,850 gallons of chemical.
  - Certified gross and net weights shall be supplied to the City with each delivery to determine the net weight of chemical delivered.
  - Chemical can be delivered to PRWWTF at 73 Paseo Real, Santa Fe, NM 87507 between 7:00am and 5:00pm seven (7) days a week.

3. Compensation.

Compensation Schedule. The City shall pay to the Contractor based upon
fixed prices for each Deliverable, per the schedule outlined in Exhibit A, less retainage, if any, as identified in paragraph C of this Clause.

A. The City shall pay to the Contractor in full payment for services satisfactorily performed at the rate of $924,321.20 per year, excluding gross receipts tax. The New Mexico gross receipts tax levied on the amounts payable under this Agreement totaling $75,678.80 per year shall be paid by the City to the Contractor at the rate of 8.1875%. The total amount payable to the Contractor under this Agreement, including gross receipts tax and expenses, shall not exceed **one million dollars ($1,000,000.00) per year**. Total not to exceed amount payable under the term of this Agreement is $4,000,000.00 including gross receipts tax. This amount is a maximum and not a guarantee that the amount of Service and Goods supplied by Contractor under this Agreement shall equal the amount stated herein. The Parties do not intend for the Contractor to continue to provide Services or Goods without compensation when the total compensation amount is reached. Contractor is responsible for notifying the City when the Services and Goods provided under this Agreement reach the total compensation amount. In no event will the Contractor be paid for Services and Goods provided in excess of the total compensation

amount without this Agreement being amended in writing prior to services, in excess of the total compensation amount being provided.

Payment shall be made upon Acceptance of each Deliverable and upon the receipt and Acceptance of a detailed, certified Payment Invoice. Payment will be made to the Contractor's designated mailing address. In accordance with Section 13-1-158 NMSA 1978, payment shall be tendered to the Contractor within thirty (30) days of the date of written certification of Acceptance. All Payment Invoices MUST BE received by the City no later than fifteen (15) days after the termination of this Agreement. Payment Invoices received after such date WILL NOT BE PAID.
Payment for polymer deliveries will normally be made within three (3) weeks of receipt of the invoice. To expedite payment, a copy of the invoice should be emailed to:

Efren (Manny) Morales, (505) 910-7627
Moralesemmorales@santafenm.gov

Mr. Morales should also be contacted regarding any questions concerning payment.

If Contractor does not receive a response that payment is in process within seven (7) days, the contractor will resubmit the invoice to the City of Santa Fe, Accounts Payable Division, accountspayable@santafenm.gov and copy the ordering department.

Payment for a polymer delivery will be calculated based on the weight of the polymer delivered as follows:

Payment = Bid Unit Price ($/lb of chemical solution) × Net Weight Delivered (lb of chemical solution)

The unit price shall include all handling and delivery costs.

C. Retainage. Not Applicable – The Parties agree there is no retainage.

D. Performance Bond. Not Applicable. The Parties agree there is no Performance Bond.

5. **Term**

THIS CONTRACT SHALL NOT BECOME EFFECTIVE UNTIL APPROVED IN WRITING BY THE CITY. This contract shall terminate **four (4) years from date of final signature.** The City reserves the right to renew this contract on an annual basis by mutual agreement not to exceed a total of ten (10) years in accordance with NMSA 1978, Sections 13-1-150 through 152.

6. **Default and Force Majeure**

The City reserves the right to cancel all, or any part of any orders placed under this contract without cost to the City, if the Contractor fails to meet the provisions of this contract and, except as otherwise provided herein, to hold the Contractor liable for any excess cost occasioned by the City due to the Contractor's default. The Contractor shall not be liable for any excess costs if failure to perform the order arises out of causes beyond the control and without the fault or negligence of the Contractor; such causes include, but are not restricted to, acts of God or the public enemy, acts of the State or Federal Government, fires, floods, epidemics, quarantine restrictions, strikes, freight embargoes, unusually severe weather and defaults of sub-contractors due to any of the above, unless the City shall determine that the supplies or services to be furnished by the sub-contractor were obtainable from other sources in sufficient time to permit the Contractor to meet the required delivery

scheduled. The rights and remedies of the City provided in this paragraph shall not be exclusive and are in addition to any other rights now being provided by law or under this contract.

7. **Termination**

A. Grounds. The City may terminate this Contract for convenience or cause. For contracts within their authority, the City Manager or their designee is authorized to provide the notice of termination, otherwise such notice of termination shall be provided by the Mayor, or their designee as authorized by the Governing Body. The Contractor may only terminate this Contract based upon the City's uncured, material breach of this Contract.

B. Notice: City Opportunity to Cure.

1) The City shall give the Contractor written notice of termination at least thirty (30) days prior to the intended date of termination.

2) Contractor shall give City written notice of termination at least thirty (30) days prior to the intended date of termination, which notice shall (i) identify all the City's material breaches of this Contract upon which the termination is based and (ii) state what the City must do to cure such material breaches. Contractor's notice of termination shall only be effective (i) if the City does not cure all material breaches within the thirty (30) day notice period or (ii) in the case of material breaches that cannot be cured within thirty (30) days, the City does not, within the thirty (30) day notice period, notify the Contractor of its intent to cure and begin with due diligence to cure the material breach.

3) Notwithstanding the foregoing, this Contract may be terminated immediately upon written notice to the Contractor (i) if the Contractor becomes unable to perform the services contracted for, as determined by the City; (ii) if, during the term of this Contract, the Contractor is suspended or debarred by the City; or (iii) the Contract is terminated pursuant to Paragraph 17, "Appropriations", of this Contract.

C. Liability. Except as otherwise expressly allowed or provided under this Contract, the City's sole liability upon termination shall be to pay for acceptable work performed prior to the Contractor's receipt or issuance of a notice of termination; provided, however, that a notice of termination shall not nullify or otherwise affect either party's liability for pre-termination defaults under or breaches of this Contract. The Contractor shall submit an invoice for such work within thirty (30) days of receiving or sending the notice of termination. *THIS PROVISION IS NOT EXCLUSIVE AND DOES NOT WAIVE THE CITY'S OTHER LEGAL RIGHTS AND REMEDIES CAUSED BY THE CONTRACTOR'S DEFAULT/BREACH OF THIS CONTRACT.*

8. **Amendment**

A. This Contract shall not be altered, changed, or amended except by instrument in writing executed by the parties hereto and all other required signatories.

B. If the City proposes an amendment to the Contract to unilaterally reduce funding due to budget or other considerations, the Contractor shall, within thirty (30) days of receipt of the proposed Amendment, have the option to terminate the Contract, pursuant to the termination provisions as set forth in Paragraph 7 herein, or to agree to the reduced funding.

9. **Status of Contractor**

The Contractor, and Contractor's agents and employees, are independent Contractors for the City and are not employees of the City. The Contractor, and Contractor's agents and employees, shall not accrue leave, retirement, insurance, bonding, use of City vehicles, or any other benefits afforded to employees of the City because of this Contract. The Contractor acknowledges that all sums received hereunder are personally reportable by the Contractor for income tax purposes, including without limitation, self-employment tax and

business income tax. The Contractor agrees not to purport to bind the City unless the Contractor has written authority to do so, and then only within the strict limits of that authority.

10. **Assignment**

The Contractor shall not assign or transfer any interest in this Contract or assign any claims for money due or to become due under this Contract without the prior written approval of the City.

11. **Subcontracting**

The Contractor shall not subcontract any portion of the services to be performed under this Contract without the prior written approval of the City. No such subcontract shall relieve the primary Contractor from its obligations and liabilities under this Contract, nor shall any subcontract obligate direct payment from the City.

12. **Non-Collusion**

In signing this Contract, the Contractor certifies the Contractor has not, either directly or indirectly, entered into action in restraint of free competitive bidding in connection with this offer submitted to the City.

13. **Inspection of Plant**

The City may inspect, at any reasonable time during Contractor's regular business hours and upon prior written notice, the Contractor's plant or place of business, or any subcontractor's plant or place of business, which is related to the performance of this contract.

14. **Commercial Warranty**

The Contractor agrees that the tangible personal property or services furnished under this Contract shall be covered by the most favorable commercial warranties the Contractor gives to any customer for such tangible personal property or services, and that the rights and remedies provided herein shall extend to the City and are in addition to and do not limit any rights afforded to the City by any other clause of this order. The contractor agrees not to disclaim warranties of fitness for a particular purpose or merchantability.

15. **Condition of Proposed Items**

Where tangible personal property is a part of this Contract, all proposed items are to be NEW and of most current production, unless otherwise specified.

16. **Records and Audit**

During the term of this Contract and for three years thereafter, the Contractor shall maintain detailed records pertaining to the services rendered and products delivered. These records shall be subject to inspection by the City, the State Auditor and other appropriate state and federal authorities. The City shall have the right to audit billings both before and after payment. Payment under this Contract shall not foreclose the right of the City to recover excessive or illegal payments.

17. **Appropriations**

The terms of this Contract, and any orders placed under it, are contingent upon sufficient appropriations and authorization being made by the Governing Body for the performance of this Contract. If sufficient appropriations and authorization are not made by the legislature, this Contract, and any orders placed under it, shall terminate upon written notice being given by the City to the Contractor. The City's decision as to whether sufficient appropriations are available shall be accepted by the Contractor and shall be final. If the City proposes an amendment to the Contract to unilaterally reduce funding, the Contractor shall have the option to terminate the Contract or to agree to the reduced funding, within thirty (30) days of receipt of the proposed amendment.

18. **Release**

The Contractor, upon final payment of the amount due under this Contract, releases the City, its officers, and employees, from all liabilities, claims and obligations whatsoever arising from or under this Contract. The Contractor agrees not to purport to bind the City, unless the Contractor has express written authority to do so, and then only within the strict limits of that authority.

19. **Confidentiality**

Any confidential information provided to or developed by the Contractor in the performance of this Contract shall be kept confidential and shall not be made available to any individual or organization by the Contractor without prior written approval by the City.

20. **Conflict of Interest**

A. The Contractor represents and warrants that it presently has no interest and, during the term of this Contract, shall not acquire any interest, direct or indirect, which would conflict in any manner or degree with the performance or services required under the Contract. The Contractor shall comply with any applicable provisions of the New Mexico Governmental Conduct Act and the New Mexico Financial Disclosures Act.

B. The Contractor further represents and warrants that it has complied with, and, during the term of this Contract, will continue to comply with, and that this Contract complies with all applicable provisions of the Governmental Conduct Act, Chapter 10, Article 16 NMSA 1978.

C. Contractor’s representations and warranties in Paragraphs A and B of this Paragraph are material representations of fact upon which the City relied when this Contract was entered into by the parties. Contractor shall provide immediate written notice to the City if, at any time during the term of this Contract, Contractor learns that Contractor’s representations and warranties in Paragraphs A and B of this Paragraph 20 were erroneous on the effective date of this Contract or have become erroneous by reason of new or changed circumstances. If it is later determined that Contractor’s representations and warranties in Paragraphs A and B of this Paragraph 20 were erroneous on the effective date of this Contract or have become erroneous by reason of new or changed circumstances, in addition to other remedies available to the City and notwithstanding anything in the Contract to the contrary, the City may immediately terminate the Contract.

D. All terms defined in the Governmental Conduct Act have the same meaning in this section.

21. **Approval of Contractor Representative(s)**

The City reserves the right to require a change in Contractor representative(s) if the assigned representative(s) are not, in the opinion of the City, adequately serving the needs of the City.

22. **Scope of Contract; Merger**

This Contract incorporates all the Agreements, covenants and understandings between the parties hereto concerning the subject matter hereof, and all such covenants, agreements, and understandings have been merged into this written contract.

All terms and conditions of the Invitation to Bid and the Contractor's response to such document(s) are incorporated herein by reference and are included in the order of precedence.

23. **Notice**

The Procurement Code, NMSA 1978, Sections 13-1-28 through 13-1-199, imposes civil and criminal penalties for its violation. In addition, the New Mexico criminal statutes impose felony penalties for bribes, gratuities, and kickbacks.

24. **Equal Opportunity Compliance**

The Contractor agrees to abide by all federal and state laws, and local Ordinances, pertaining to equal employment opportunity. In accordance with all such laws, rules, and regulations, the Contractor agrees to assure that no person in the United States shall on the grounds of race, religion, color, national origin, ancestry, sex, age, physical or mental handicap, or serious medical condition, spousal affiliation, sexual orientation or gender identity, be excluded from employment with or participation in, be denied the benefits of, or be otherwise subjected to discrimination under any program or activity performed under this Contract. If Contractor is found not to be in compliance with these requirements during the life of this Contract, Contractor agrees to take appropriate steps to correct these deficiencies.

25. **Indemnification**

The Contractor shall hold the City and its employees harmless and shall indemnify the City and its employees against any and all claims, suits, actions, liabilities and costs of any kind, including attorney's fees for personal injury or damage to property arising from the acts or omissions of the Contractor, its agents, officers, employees or subcontractors. The Contractor shall not be liable for any injury or damage as a result of any negligent act or omission committed by the City, its officers or employees.

26. **New Mexico Tort Claims Act**

Any liability incurred by the City of Santa Fe in connection with this Contract is subject to the immunities and limitations of the New Mexico Tort Claims Act, Section 41-4-1, et. seq. NMSA 1978, as amended. The City and its "public employees" as defined in the New Mexico Tort Claims Act, do not waive sovereign immunity, do not waive any defense and do not waive any limitation of liability pursuant to law. No provision in this Contract modifies or waives any provision of the New Mexico Tort Claims Act.

27. **Applicable Law**

The laws of the State of New Mexico shall govern this Contract, without giving effect to its choice of law provisions. Venue shall be proper only in a New Mexico court of competent jurisdiction in accordance with NMSA 1978, Section 38-3-2. By execution of this Contract, Contractor acknowledges and agrees to the

jurisdiction of the courts of the State of New Mexico over any and all lawsuits arising under or out of any term of this Contract.

28. **Limitation of Liability**

The Contractor's liability to the City, for any cause whatsoever shall be limited to the purchase price paid to the Contractor for the products and services that are the subject of the City's, claim. The foregoing limitation does not apply to paragraph 25 of this Contract or to damages resulting from personal injury caused by the Contractor's negligence.

29. **Incorporation by Reference and Precedence**

If this Contract has been procured pursuant to a request for proposals, this Contract is derived from (1) the request for proposal, (including any written clarifications to the request for proposals and any City response to questions); (2) the Contractor's best and final offer; and (3) the Contractor's response to the request for proposals.

In the event of a dispute under this Contract, applicable documents will be referred to for the purpose of clarification or for additional detail in the following order of precedence: (1) amendments to the Contract in reverse chronological order; (2) the Contract, including the scope of work and all terms and conditions thereof; (3) the request for proposals, including attachments thereto and written responses to questions and written clarifications; (4) the Contractor's best and final offer if such has been made and accepted by the City; and (5) the Contractor's response to the request for proposals.

30. **Workers' Compensation**

The Contractor agrees to comply with state laws and rules applicable to workers' compensation benefits for its employees. If the Contractor fails to comply with the Workers' Compensation Act and applicable rules when required to do so, this Contract may be terminated by the City.

31. **Inspection**

If this contract is for the purchase of tangible personal property (goods), final inspection and acceptance shall be made at Destination. Tangible personal property rejected at Destination for non-conformance to specifications shall be removed at Contractor's risk and expense promptly after notice of rejection and shall not be allowable as billable items for payment.

32. **Inspection of Services**

If this contract is for the purchase of services, the following terms shall apply.

A. Services, as used in this Article, include services performed, workmanship, and material furnished or utilized in the performance of services.

B. The Contractor shall provide and maintain an inspection system acceptable to the City covering the services under this Contract. Complete records of all inspection work performed by the Contractor shall be maintained and made available to the City and for as long thereafter as the Contract requires. The City has the right to inspect and test all services contemplated under this Contract to the extent practicable at all times and places during the term of the Contract. The City shall perform inspections and tests in a manner that will not unduly delay or interfere with Contractor's performance.

C. If the City performs inspections or tests on the premises of the Contractor or a subcontractor, the Contractor shall furnish, and shall require subcontractors to furnish, at no increase in contract price, all reasonable facilities and assistance for the safe and convenient performance of such inspections or tests.

D. If any part of the services do not conform with the requirements of this Contract, the City may require the Contractor to re-perform the services in conformity with the requirements of this Contract at no increase in contract amount. When the defects in services cannot be corrected by re-performance, the City may:

(1) require the Contractor to take necessary action(s) to ensure that future performance conforms to the requirements of this Contract; and

(2) reduce the contract price to reflect the reduced value of the services performed.

E. If the Contractor fails to promptly re-perform the services or to take the necessary action(s) to ensure future performance in conformity with the requirements of this Contract, the City may:

(1) by contract or otherwise, perform the services and charge to the Contractor any cost incurred by the City that is directly related to the performance of such service; or

(2) terminate the contract for default.

33. **Insurance**

If the services contemplated under this Contract will be performed on or in City facilities or property, Contractor shall maintain in force during the entire term of this Contract, the following insurance coverage(s), naming the City as additional insured.

A. Commercial General Liability insurance shall be written on an occurrence basis and be a broad as ISO Form CG 00 01 with limits not less than $2,000,000 per occurrence and $2,000,000 in the aggregate for claims against bodily injury, personal and advertising injury, and property damage. Said policy shall include broad form Contractual Liability coverage and be endorsed to name the City of Santa Fe their officials, officers, employees, and agents as additional insureds.

B. Broader Coverage and Limits. The insurance requirements under this Contract shall be the greater of (1) the minimum coverage and limits specified in this Contract, or (2) the broader coverage and maximum limits of coverage of any insurance policy or proceeds available to the Named Insured. It is agreed that these insurance requirements shall not in any way act to reduce coverage that is broader or that includes higher limits than the minimums required herein. No representation is made that the minimum insurance requirements of this Contract are sufficient to cover the obligations of Contractor hereunder.

C. Contractor shall maintain the above insurance for the term of this Contract and name the City as an additional insured and provide for 30 days cancellation notice on any Certificate of Insurance form furnished by Contractor. Such certificate shall also specifically state the coverage provided under the policy is primary over any other valid and collectible insurance and provide a waiver of subrogation.

34. **Impracticality of Performance**

A party shall be excused from performance under this Contract for any period that the party is prevented from performing as a result of an act of God, strike, war, civil disturbance, epidemic, or court order, provided that the party has prudently and promptly acted to take any and all steps that are within the party's control to ensure performance. Subject to this provision, such non-performance shall not be deemed a default or a ground for termination.

35. **Invalid Term or Condition**

If any term or condition of this Contract shall be held invalid or unenforceable, the remainder of this Contract shall not be affected and shall be valid and enforceable.

36. **Enforcement of Contract**

A party's failure to require strict performance of any provision of this Contract shall not waive or diminish that party's right thereafter to demand strict compliance with that or any other provision. No waiver by a party of any of its rights under this Contract shall be effective unless express and in writing, and no effective waiver by a party of any of its rights shall be effective to waive any other rights.

37. **Patent, Copyright and Trade Secret Indemnification**

A. The Contractor shall defend, at its own expense, the City against any claim that any product or service provided under this Contract infringes any patent, copyright to trademark in the United States or Puerto Rico, and shall pay all costs, damages and attorneys' fees that a court finally awards as a result of any such claim. In addition, if any third party obtains a judgment against the City based upon Contractor's trade secret infringement relating to any product or services provided under this Contract, the Contractor agrees to reimburse the City for all costs, attorneys' fees and amount of the judgment. To qualify for such defense and or payment, the City shall:

1) give the Contractor prompt written notice within 48 hours of any claim;
2) allow the Contractor to control the defense of settlement of the claim; and
3) cooperate with the Contractor in a reasonable way to facilitate the defense or settlement of the claim.

B. If any product or service becomes, or in the Contractor's opinion is likely to become the subject of a claim of infringement, the Contractor shall at its option and expense:

1) provide the City the right to continue using the product or service and fully indemnify the City against all claims that may arise out of the City's use of the product or service;
2) replace or modify the product or service so that it becomes non-infringing; or,
3) accept the return of the product or service and refund an amount equal to the value of the returned product or service, less the unpaid portion of the purchase price and any other amounts, which are due to the Contractor. The Contractor's obligation will be void as to any product or service modified by the City to the extent such modification is the cause of the claim.

38. **Survival**

The Contract paragraphs titled "Patent, Copyright, Trademark, and Trade Secret Indemnification; Indemnification; and Limit of Liability" shall survive the expiration of this Contract. Software licenses, leases, maintenance and any other unexpired Agreements that were entered into under the terms and conditions of this Contract shall survive this Contract.

39. **Disclosure Regarding Responsibility**

A. Any prospective Contractor and any of its Principals who enter into a contract greater than sixty thousand dollars ($60,000.00) with any City for professional services, tangible personal property, services or construction agrees to disclose whether the Contractor, or any principal of the Contractor's company is presently debarred, suspended, proposed for debarment, or declared ineligible for award of contract by any

federal entity, state agency or local public body.

B. Principal, for the purpose of this disclosure, means an officer, director, owner, partner, or a person having primary management or supervisory responsibilities within a business entity or related entities.

C. The Contractor shall provide immediate written notice to the City if, at any time during the term of this Contract, the Contractor learns that the Contractor's disclosure was at any time erroneous or became erroneous by reason of changed circumstances.

D. A disclosure that any of the items in this requirement exist will not necessarily result in termination of this Contract. However, the disclosure will be considered in the determination of the Contractor's responsibility and ability to perform under this Contract. Failure of the Contractor to furnish a disclosure or provide additional information as requested will be grounds for immediate termination of this Contract pursuant to the conditions set forth in Paragraph 7 of this Contract.

E. Nothing contained in the foregoing shall be construed to require establishment of a system of records in order to render, in good faith, the disclosure required by this document. The knowledge and information of a Contractor is not required to exceed that which is the normally possessed by a prudent person in the ordinary course of business dealings.

F. The disclosure requirement provided is a material representation of fact upon which reliance was placed when making an award and is a continuing material representation of the facts during the term of this Contract. If during the performance of the contract, the Contractor is indicted for or otherwise criminally or civilly charged by any government entity (federal, state or local) with commission of any offenses named in this document the Contractor must provide immediate written notice to the City. If it is later determined that the Contractor knowingly rendered an erroneous disclosure, in addition to other remedies available to the Government, the City may terminate the involved contract for cause. Still further the City may suspend or debar the Contractor from eligibility for future solicitations until such time as the matter is resolved to the satisfaction of the City.

40. **Suspension, Delay or Interruption of Work**

The City may, without cause, order the Contractor, in writing, to suspend, delay or interrupt the work in whole or in part for such period of time as the City may determine. The contract sum and contract time shall be adjusted for increases in cost and/or time associated with Contractor's compliance therewith. Upon receipt of such notice, Contractor shall leave the jobsite and any equipment in a safe condition prior to departing. Contractor must assert rights to additional compensation within thirty (30) days after suspension of work is lifted and return to work is authorized. Any compensation requested for which entitlement is granted and the contract sum adjusted, shall have profit included (for work completed) and for cost only (not profit) for Contractor costs incurred directly tied to the suspension itself and not otherwise covered by Contract remedy. Any change in Total Compensation must be reflected in an Amendment executed pursuant to Section 8 of this Contract.

41. **Notification**

Either party may give written notice to the other party in accordance with the terms of this Paragraph. Any written notice required or permitted to be given hereunder shall be deemed to have been given on the date of delivery if delivered by personal service or hand delivery or three (3) business days after being mailed.

To the City: **Efren (Manny) Morales, 73 Paseo Real, Santa Fe, NM 87507**

To the Contractor: **Justin Grillo, 2801 Broadbent Pkwy. NE, St. G, Albuquerque, NM 87107**

Either party may change its representative or address above by written notice to the other in accordance with the terms of this Paragraph. The carrier for mail delivery and notices shall be the agent of the sender.

To the Contractor: **Justin Grillo, 2801 Broadbent Pkwy. NE, St. G, Albuquerque, NM 87107**

42. **Succession**

This Contract shall extend to and be binding upon the successors and assigns of the parties.

IN WITNESS WHEREOF, the Parties have executed this Contract as of the date of the signature by the required approval authorities below.

CITY OF SANTA FE:

_____
ALAN WEBBER, MAYOR

DATE:_____

CONTRACTOR:
BRENNTAG PACIFIC, INC.

Tom Crain
Tom Crain (Sep 3, 2025 18:42:47 CDT)
_____
TOM CRAIN, PRESIDENT

DATE: Sep 3, 2025

NMBTIN#: _____

City of SF Business License #: _____

ATTEST:

_____
CITY CLERK

CITY ATTORNEY'S OFFICE:

Marcos Martinez
Marcos Martinez (Sep 10, 2025 11:21:22 MDT)
_____
SENIOR ASSISTANT CITY ATTORNEY

APPROVED FOR FINANCES:

Emily K. Oster
_____
FINANCE DIRECTOR

Bidder Instructions: *(Replace Department Instructions, prior to ITB release. Be sure to check row*
Items - Bidders do not have the ability to add or delete items.
Approx. Qty. - Quantities provides are estimates, only, and do not establish a definite quantity contract. Actual quantities purchased under a resulting agreement may vary. Bidders may not change the Approx. Qty.

UOM (Unit of Measure) - Bidders do not have the ability to change the UOM. Any variation from the UOM identified may be provided in the Comments.
Article and Description - Bidder cannot change Article and Description. Any clarification, explanation, brand name identification, etc. must be provided in the Comments.
Unit Price - Bidders must provide pricing that conforms with the identified Unit Price.
Comments - Bidders may only provide comments to explain or clarify an item, identify a brand name, or provide information as specifically stated in the corresponding ITB document. Changes and additions to the items, including variations in pricing for an item, are not permitted. Any comments that do not conform to the requirements in the ITB or on this form will be disregarded, and will not be included in the resulting award, if bidder is awarded.

Upload this into BID Central separate from the completed ITB

Product Information

Item	Approx. Qty.	UOM	Article and Description	Unit Price	Unit Treats x number of gallons of wastewater	Comments
1	150	mg/L	Optimum Chemical Dosage	n/a		40% active solution.
2	5	lb/gal	Chemical Solution Concentration	n/a		Based on density found in SDS.

Bid Price

Item	Approx. Qty.	UOM	Article and Description	Unit Price	Unit Treats x number of gallons of wastewater	Comments
1	1	GAL - Gallon	Chemical Settling Aid / P Removal	$8.93	4000	Minimum dosage tested. Based on product performance, actual dosage may be lower.

Questions:

How is your product delivered (liquid, solid, granular, etc.)?	liquid
Optimum Chemical Dosage	150 mg/L active / 250 ppm solution
Your Chemical's Name	Brennfloc RE 5000
Chemical Solution Concentration	40% / or 5 lb active/gallon solution
How much of your product is needed to properly treat 1 gallon?	1.42 g or 0.946 mL of solution

Log # *{Finance use only}*	
Journal # *{Finance use only}*	

City of Santa Fe, New Mexico
BUDGET AMENDMENT RESOLUTION (BAR)

DEPARTMENT / DIVISION NAME	DATE
Public Utilities Department/Wastewater Management Division	11/24/2025

ITEM DESCRIPTION	ORG	OBJECT	PROJECT	INCREASE	DECREASE
EXPENDITURES				*{enter as positive #}*	*{enter as negative #}*
WW TREATMENT PLANT/OPERATING SUPPLIES	5000367	530200		1,000,000	
REVENUES				*{enter as negative #}*	*{enter as positive #}*
				$ 1,000,000	$ -

JUSTIFICATION: *(use additional page if needed)*
--Attach supporting documentation/memo

To transfer monies to Operating Supplies for BRENNTAG. Please add when posting BRENTAGG

{Complete section below if BAR results in a net change to ANY Fund}	
Fund(s) Affected	Fund Balance Increase/(Decrease)
Fund 500	(1,000,000)
TOTAL:	**(1,000,000)**

Linda MacAllister 11/24/2025
Prepared By *{print name}* Date

Division Director Signature *{optional}* Date

12/04/2025
Department Director Signature Date

{Use this form for Finance Committee/ City Council agenda items ONLY}

CITY COUNCIL APPROVAL

City Council Approval Date

Agenda Item #:

Andy Hopkins 12/04/2025
Budget Officer Date

Finance Director *{≤ $5,000}* Date

City Manager *{≤ $60,000}* Date

CITY OF SANTA FE

Date: December 2, 2025

To: Governing Body

From: Tim Farrell, Interim Facilities Division Director Timothy Farrell

Via: Sam Burnett, Interim Public Works Department Director JOHN BURNETT (Dec 2, 2025 12:27:48 MST)
Kyle Morgan, Interim Director of Emergency Management Kyle Morgan

---

ACTION:
Request for Approval to Reauthorize the $1,000,000 Budgeted in FY 2023-24 to Facilities WIP Construction for Security Camera Replacement to Allocate the Unspent Balance of $426,831 to City Hall Security Improvements. (Tim Farrell, Interim Facilities Division Director, tgfarrell@santafenm.gov)

BACKGROUND AND SUMMARY:
In Fiscal Year 2024, the City allocated $1,000,000 in ½% GRT for Infrastructure to the Facilities Division budget to support a security camera project. Installation was completed in FY25, and a remaining balance of $426,830.15 is now available for reallocation to the high-priority City Hall Security Improvements Project.

The reallocation of these one-time funds will support planning and design for security, accessibility, and interior layout upgrades at City Hall. The project will assess current conditions, identify vulnerabilities, and develop design solutions to improve safety, functionality, and public accessibility. Key components include:

- **Physical Security Enhancements:** Evaluate and implement measures such as controlled access points, expanded surveillance coverage, and hardened entries and glazing at primary access locations.
- **Space Reconfiguration:** Improve security and operational efficiency by relocating senior staff to upper floors and consolidating high-traffic and cargo-handling functions (e.g., Parking Coin Collection and the Print Shop) on the ground floor.
- **Council Chambers Design:** Prepare schematic and design documents for a remodel of the Council Chambers to enhance public accessibility, safety, and broadcast capabilities.

These activities will result in a comprehensive design package and cost estimate to inform future construction funding requests.

ATTACHMENTS:
- City of Santa Fe—FY 2023-24 Adopted Budget [Appendix: FY24 Supplemental Budget Allocation – Capital Expenditures (page 123)]
- Original Memo of October 18, 2023 (TBAR 04.1723; Total $1,000,000 from Facilities CIP Fund, Org. 3209980, Object 572970 – WIP Construction)

PRIOR APPROVALS AND SUPPORTING INFORMATION:

FUNDING SOURCE:
Reauthorize the $1,000,000 Budgeted in FY 2023-24 to Facilities WIP Construction for Security Camera Replacement to Allocate the Unspent Balance of $426,831 to City Hall Security Improvements Fund

Name/Number: 320
Munis Org Name/Number: 3209980
Munis Object Name/Number: 572960

Budget Officer/Designee: Andy Hopkins Date: _____
Budget Officer Comment/Exceptions: _____

PROCUREMENT METHOD:
Not Applicable.

Chief Procurement Officer (CPO)/Designee: _____ Date: _____
CPO Comment/Exceptions: _____

ASSOCIATED APPROVALS:
IT Components included? ☐ Yes | ☒ No
Approval: _____ Title: _____ Date: _____
Comment/Exceptions: _____

Treasury/Point of Sale Components included? ☐ Yes | ☒ No
Approval: _____ Title: _____ Date: _____
Comment/Exceptions: _____

Vehicles included? ☐ Yes | ☒ No
Approval: _____ Title: _____ Date: _____
Comment/Exceptions: _____

Construction to City Facilities, Furniture, and/or Fixtures, included? ☐ Yes | ☒ No
Approval: _____ Title: _____ Date: _____
Comment/Exceptions: _____

Is this an externally funded purchase? ☐ Yes | ☒ No
If yes, what is the issuing agency: _____
Approval: _____ Title: _____ Date: _____
Comment/Exceptions: _____

Capital Asset or Project? ☐ Yes | ☒ No
Project Ledger Number _____
Approval: _____ Title: _____ Date: _____
Comment/Exceptions: _____

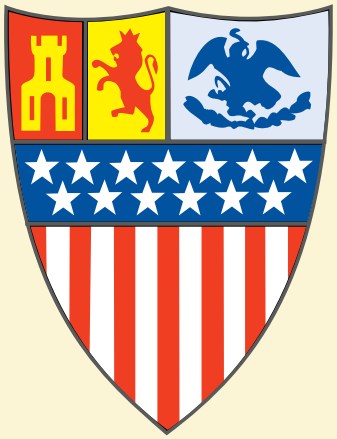

THE CITY OF
SANTA FE

FY 2023-24 Adopted Budget

City of Santa Fe

200 Lincoln Avenue

Santa Fe, NM 87501

FISCAL YEAR 2024 - ADOPTED BUDGET

TABLE OF CONTENTS

I. CITY ORGANIZATIONAL CHART 2

II. ELECTED OFFICIALS 3

III. MAYOR'S TRANSMITTAL LETTER 4

IV. EXECUTIVE SUMMARY 9

V. EXPENDITURES 26

COMMUNITY DEVELOPMENT 26

AFFORDABLE HOUSING 27

ARTS AND CULTURE 30

ECONOMIC DEVELOPMENT 33

PLANNING AND LAND USE 36

TOURISM SANTA FE 42

COMMUNITY ENGAGEMENT 46

COMMUNITY HEALTH AND SAFETY 51

COMMUNITY SERVICES 52

OFFICE OF EMERGENCY MANAGEMENT 59

FIRE 62

POLICE 68

FINANCE 72

GENERAL GOVERNMENT 78

MAYOR & CITY COUNCIL 78

CITY MANAGER 79

CITY ATTORNEY 80

MUNICIPAL COURT 80

RISK MANAGEMENT & SAFETY 81

HUMAN RESOURCES 84

INFORMATION TECHNOLOGY & TELECOMMUNICATIONS 87

PUBLIC UTILITIES 93

PUBLIC WORKS 99

VI. GLOSSARY OF TERMS & ABBREVIATIONS 108

APPENDIX: FY24 SUPPLEMENTAL BUDGET ALLOCATION – CAPITAL EXPENDITURES 123

FISCAL YEAR 2024 - ADOPTED BUDGET

APPENDIX

FY24 SUPPLEMENTAL BUDGET ALLOCATION - CAPITAL EXPENDITURES

Department/Division	Fund	Category	Description	Expenditures	Revenue
Public Works/Municipal Recreation Complex	530-MRC Operating Fund	Capital Outlay	Lease-purchase of three (3) mowers needed at Marty Sanchez Golf Course for turf maintenance	$ 86,000	$ -
Public Works/Municipal Recreation Complex	530-MRC Operating Fund	Transfer In	Transfer from GRT Fund for mowers	-	86,000
Non-Departmental/Gross Receipts Tax	216-Gross Receipts Tax	Transfer Out	Transfer to MRC Fund for mowers	86,000	-
Public Works/Facilities CIP	320-Facilities CIP Fund	Land & Building	Critical facilities assessment including design and repair, plus security cameras and access control points for Fire, Police and GCCC	2,000,000	-
Public Works/Facilities CIP	320-Facilities CIP Fund	Transfer In	Transfer from GRT Fund for facilities assessment	-	2,000,000
Non-Departmental/Gross Receipts Tax	216-Gross Receipts Tax	Transfer Out	Transfer to Facilities CIP Fund for facilities assessment	2,000,000	-
Community Engagement/Constituent Services	100-General Fund	Contractual Services	Customer Relationship Management (CRM) System	400,000	-
Information Technology & Telecommunications	365-1/2% GRT Fund	Contractual Services	Stand-up costs for new ITT Disaster Recovery Site	200,000	-
Information Technology & Telecommunications	365-1/2% GRT Fund	Transfer In	Transfer from GRT Fund for Disaster Recovery Site	-	200,000
Non-Departmental/Gross Receipts Tax	216-Gross Receipts Tax	Transfer Out	Transfer to 1/2% GRT Fund for Disaster Recovery Site	200,000	-
Information Technology & Telecommunications	365-1/2% GRT Fund	Contractual Services	Upgrade to the non-Public Safety radio system	600,000	-
Information Technology & Telecommunications	365-1/2% GRT Fund	Transfer In	Transfer from GRT Fund for the non-Public Safety radio system upgrade	-	600,000
Non-Departmental/Gross Receipts Tax	216-Gross Receipts Tax	Transfer Out	Transfer to 1/2% GRT Fund for the non-Public Safety radio system upgrade	600,000	-
Public Works/Streets CIP	330-Streets CIP Fund	Land & Building	Development and implementation of new gateway median designs to improve maintenance and aesthetics	540,000	-
Public Works/Streets CIP	330-Streets CIP Fund	Transfer In	Transfer from GRT Fund for gateway median improvements	-	540,000
Non-Departmental/Gross Receipts Tax	216-Gross Receipts Tax	Transfer Out	Transfer to Streets CIP Fund for gateway median improvements	540,000	-
Public Works/Streets CIP	330-Streets CIP Fund	Land & Building	Pavement rehabilitation/resurfacing and ADA sidewalk ramps on critical roadways in each district	2,500,000	-
Public Works/Streets CIP	330-Streets CIP Fund	Transfer In	Transfer from General Fund for pavement rehab/ADA sidewalk ramps	-	2,500,000
Public Works/Complete Streets (General Fund)	100-General Fund	Transfer Out	Transfer to Streets CIP Fund for pavement rehab/ADA sidewalk ramps	2,500,000	-
Public Works/Parks & Trails CIP	355-Parks & Trails CIP Fund	Land & Building	Replacement of play equipment at Pueblo del Sol Park	500,000	-
Public Works/Parks & Trails CIP	355-Parks & Trails CIP Fund	Transfer In	Transfer from GRT Fund for Pueblo del Sol Park play equipment replacement	-	500,000
Non-Departmental/Gross Receipts Tax	216-Gross Receipts Tax	Transfer Out	Transfer to Parks/Trails CIP Fund for Pueblo del Sol Park play equipment replacement	500,000	-
Community Services/Administration	100-General Fund	Contractual Services	Hotel/Motel conversion project to increase alternative housing options for unsheltered and/or low income individuals with unused housing vouchers	2,000,000	-
Community Services/Administration	100-General Fund	Transfer In	Transfer from GRT Fund for hotel/motel conversion project	-	2,000,000
Non-Departmental/Gross Receipts Tax	216-Gross Receipts Tax	Transfer Out	Transfer to General Fund for hotel/motel conversion project	2,000,000	-
Economic Development	212-Economic Development	Contractual Services	El Lucero Crossing site pre-development	500,000	-
Information Technology & Telecommunications	325-Special Projects CIP Fun	Contractual Services	Ongoing ERP development for Tyler MUNIS and Kronos systems, including new modules and Application Programming Interface (API) development	4,027,998	-
Information Technology & Telecommunications	325-Special Projects CIP Fun	Transfer In	Transfer from 1/2% GRT Fund for ERP development project	-	3,250,000
Information Technology & Telecommunications	365-1/2% GRT Fund	Transfer Out	Transfer to Special Projects CIP Fund for ERP development project	3,250,000	-
TOTAL				**25,029,998**	**11,676,000**

City of Santa Fe, New Mexico

memo

Date: October 18, 2023

To: Emily Oster, Finance Director
Andy Hopkins, Budget Division

From: Regina Wheeler
Regina Wheeler (Oct 19, 2023 15:50 MDT)
Regina Wheeler, Public Works Department Director
De Alva Calabaza, Administrative Manager, Facilities Division

Reviewed by: Halona Crowe 10/19/2023
Halona Crowe, PW Business Operations Manager

ACTION:

Public Works, Facilities Division is submitting a request for approval of TBAR 04.1723 a total of **$1,000,000.00** from Facilities CIP; Org. 3209980 Object: 572970 – WIP Construction into the following:

- **$1,000,0000.00** into Facilities CIP; PL ID: FAC2432014 Org. 3209980 Object: 572970 – WIP Construction. This project is for the ITT Security Camera Replacement and installation citywide.

This action will move part of the $2M FY 24 capital budget allocation into the designated project ledger for tracking.

Please let us know if you have any questions. Thank you.

Memo - FY24 TBAR 04.1723 ITT Security Cameras hc

Final Audit Report 2023-10-19

Created:	2023-10-19
By:	DeAlva Calabaza (dxcalabaza@ci.santa-fe.nm.us)
Status:	Signed
Transaction ID:	CBJCHBCAABAARpJp3UQ4KEkqp-6fPOpxU7YtjqJ2VWuM

"Memo - FY24 TBAR 04.1723 ITT Security Cameras hc" History

Document created by DeAlva Calabaza (dxcalabaza@ci.santa-fe.nm.us)
2023-10-19 - 6:25:36 PM GMT- IP address: 63.232.20.2

Document emailed to rawheeler@santafenm.gov for signature
2023-10-19 - 6:25:48 PM GMT

Email viewed by rawheeler@santafenm.gov
2023-10-19 - 9:50:17 PM GMT- IP address: 104.47.64.254

Signer rawheeler@santafenm.gov entered name at signing as Regina Wheeler
2023-10-19 - 9:50:29 PM GMT- IP address: 63.232.20.2

Document e-signed by Regina Wheeler (rawheeler@santafenm.gov)
Signature Date: 2023-10-19 - 9:50:31 PM GMT - Time Source: server- IP address: 63.232.20.2

Agreement completed.
2023-10-19 - 9:50:31 PM GMT

Powered by Adobe Acrobat Sign

GB Packet_Allocate $426,831 to City Hall Security_12 02 2025

Final Audit Report 2025-12-02

Created:	2025-12-02
By:	Elizabeth Kahahane (elkahahane@santafenm.gov)
Status:	Signed
Transaction ID:	CBJCHBCAABAAo3bDCMP40JoGB765vSocC0qLxm8QN-fd

"GB Packet_Allocate $426,831 to City Hall Security_12 02 2025" History

Document created by Elizabeth Kahahane (elkahahane@santafenm.gov)
2025-12-02 - 6:46:20 PM GMT- IP address: 63.232.20.2

Document emailed to Timothy Farrell (tgfarrell@santafenm.gov) for signature
2025-12-02 - 6:48:02 PM GMT

Email viewed by Timothy Farrell (tgfarrell@santafenm.gov)
2025-12-02 - 6:52:53 PM GMT- IP address: 104.47.64.254

Document e-signed by Timothy Farrell (tgfarrell@santafenm.gov)
Signature Date: 2025-12-02 - 6:54:50 PM GMT - Time Source: server- IP address: 63.232.20.2

Document emailed to KYLE MORGAN (klmorgan@santafenm.gov) for signature
2025-12-02 - 6:54:53 PM GMT

Email viewed by KYLE MORGAN (klmorgan@santafenm.gov)
2025-12-02 - 7:22:14 PM GMT- IP address: 174.240.20.34

Document e-signed by KYLE MORGAN (klmorgan@santafenm.gov)
Signature Date: 2025-12-02 - 7:25:52 PM GMT - Time Source: server- IP address: 174.240.20.34

Document emailed to JOHN BURNETT (jsburnett@santafenm.gov) for signature
2025-12-02 - 7:26:33 PM GMT

Email viewed by JOHN BURNETT (jsburnett@santafenm.gov)
2025-12-02 - 7:27:09 PM GMT- IP address: 63.232.20.2

Document e-signed by JOHN BURNETT (jsburnett@santafenm.gov)
Signature Date: 2025-12-02 - 7:27:48 PM GMT - Time Source: server- IP address: 63.232.20.2

Powered by Adobe Acrobat Sign

Agreement completed.

2025-12-02 - 7:27:48 PM GMT

Powered by
Adobe
Acrobat Sign

CITY OF SANTA FE

The Purchasing Memo

Date: December 2, 2025

To: Governing Body

From: Sebastian Gallegos, Airport Project Manager SFG

Via: Jimmy Gunn, Interim Airport Director JG
James Garduno, Airport Project Manager

Subject: HEI On-Call Construction Services

Vendor Name: HEI Inc

Vendor Number: 2385

ACTION:

Request for Approval of an On-Call Price Agreement with HEI Inc. in the Total Amount of $10,000,000 Including NMGRT for Construction Services for a Term of 2 Years. (Sebastian Gallegos, Project Manager, sfgallegos@santafenm.gov)

CONTRACT NUMBER:

The FY26 Munis Contract Number is 3260188.

BACKGROUND AND SUMMARY:

On-call Construction Service is directed towards specialization in new construction, renovations, remodeling, repairs, and emergency response services. HEI is a dependable, on-demand construction support ensuring projects are completed on time, within budget, and to the highest standards of workmanship. Recognizing a growing demand for dependable construction services that respond quickly to project timelines and emergency needs, On-call positioned itself as a responsive and flexible contractor capable of handling a broad range of construction and renovation projects. HEI comprises itself with seasoned professionals with years of experience in general contracting, project management, site supervision, and skilled trades. By combining hands-on expertise with a customer-first approach, we have built a reputation for professionalism, integrity, and consistent delivery.

ATTACHMENTS:

Construction Contract
Statewide Price Agreement
Certificate of Insurance

FUNDING SOURCE:

Fund Name/Number: Various
Munis Org Name/Number: Various
Munis Object Name/Number: Various

Budget Officer/Designee: Andy Hopkins Date: 12/16/2025
Budget Officer Comment/Exceptions: _____

PROCUREMENT METHOD:

The procurement method used was NMSA 1978, Section 13-1-129, Statewide Price Agreement

The State Wide Price Agreement #40-00000-23-00034 which expires on 12/28/2025

Chief Procurement Officer (CPO)/Designee: JoAnn Lovato Montaño Date: 12/16/2025
CPO Comment/Exceptions: _____

ASSOCIATED APPROVALS:

IT Components included? ☐ Yes | ☒ No
Approval: _____ Title: _____ Date: _____
Comment/Exceptions: _____

Treasury/Point of Sale Components included? ☐ Yes | ☒ No
Approval: _____ Title: _____ Date: _____
Comment/Exceptions: _____

Vehicles included? ☐ Yes | ☒ No
Approval: _____ Title: _____ Date: _____
Comment/Exceptions: _____

Construction to City Facilities, Furniture, and/or Fixtures, included? ☒ Yes | ☐ No
Approval: JOHN BURNETT (Dec 15, 2025 12:39:57 MST) Title: Interim Public Works Director Date: 12/15/2025
Comment/Exceptions: _____

Is this an externally funded purchase? ☐ Yes | ☒ No
If yes, what is the issuing agency: _____
Approval: _____ Title: _____ Date: _____
Comment/Exceptions: _____

Capital Asset or Project? ☐ Yes | ☒ No
Project Ledger Number _____
Approval: _____ Title: _____ Date: _____
Comment/Exceptions: _____

Docusign Envelope ID: F7054613-D4F6-4F51-88B2-8AAEDECCAACE

State of New Mexico
General Services Department
Purchasing Division

Statewide Price Agreement Amendment

Awarded Vendor:
51 Vendors

Ship To:
All State of New Mexico agencies, commissions, institutions, political subdivisions and local public bodies allowed by law.

Invoice:
As Requested at Time of Order

Number: **40-00000-23-00034**

Amendment No.: **Two**

Term: **December 29, 2023 – December 28, 2025**

Procurement Specialist: **Yvette Anaya** ya

Telephone No.: **(505) 500-9737**

Email: **Yvette.anaya@gsd.nm.gov**

Title: **General Construction Services**

This amendment is to be attached to the respective Price Agreement and become a part thereof.

In accordance with Price Agreement provisions, and by mutual agreement of all parties, this Price Agreement is extended from December 29, 2024 to December 28, 2025 at the same price, terms and conditions.

This amendment is issued to reflect the following effective immediately. See Attached pages for vendor information and pricing escalation for (BF) B & D Industries, Inc.

Except as modified by this amendment, the provisions of the Price Agreement shall remain in full force and effect.

Accepted for the State of New Mexico

Dorothy Mendonca

Date: 12/26/2024

Dorothy Mendonca
New Mexico State Purchasing Agent

Docusign Envelope ID: F7054613-D4F6-4F51-88B2-8AAEDECCAACE

B&D Industries, Inc. (AF)					
Column1	**Item**	**UOM**	**Description**	**Current Rate**	**New Rate**
Under $60,000	1	Hour	Superintendent, regular hours	$ 105.00	**$ 105.00**
Under $60,000	2	Hour	Superintendent, after hours	$ 120.00	**$ 120.00**
Under $60,000	3	Hour	Journeymen/Experienced Worker, regular hours worked	$ 90.00	**$ 95.77**
Under $60,000	4	Hour	Journeymen/Experienced Worker, after hours worked	$ 110.00	**$ 117.05**
Under $60,000	5	Hour	Laborer, regular hours worked	$ 75.00	**$ 78.81**
Under $60,000	6	Hour	Laborer, after hours worked	$ 95.00	**$ 99.83**
Over $60,000	7	Hour	Superintendent, regular hours	$ 105.00	**$ 100.00**
Over $60,000	8	Hour	Superintendent, after hours	$ 120.00	**$ 115.00**
Over $60,000	9	Hour	Journeymen/Experienced Worker, regular hours worked	$ 90.00	**$ 95.77**
Over $60,000	10	Hour	Journeymen/Experienced Worker, after hours worked	$ 110.00	**$ 117.05**
Over $60,000	11	Hour	Laborer, regular hours worked	$ 75.00	**$ 78.81**
Over $60,000	12	Hour	Laborer, after hours worked	$ 95.00	**$ 99.83**
All Projects	13	Hour	Diagnosis, project estimates, troubleshooting	$ 90.00	**$ 95.77**
All Projects	14	%	Discount of all parts	0%	**0%**
All Projects	15	Day	Daily per diem rate for overnight stay as needed including dinner & breakfast per person	$ 175.00	**$ 175.00**
All Projects	16	Mile	One way per mile cost, per vehicle	$ 0.66	**$ 0.66**

Certificate Of Completion

Envelope Id: F7054613-D4F6-4F51-88B2-8AAEDECCAACE
Status: Completed
Subject: Please DocuSign: SPD SPA 40-00000-23-00034 A002
Source Envelope:
Document Pages: 2
Signatures: 1
Certificate Pages: 5
Initials: 2
AutoNav: Enabled
EnvelopeId Stamping: Enabled
Time Zone: (UTC-07:00) Mountain Time (US & Canada)

Envelope Originator:
Yvette Anaya
1100 S Saint Francis Dr
Santa Fe, NM 87502
yvette.anaya@gsd.nm.gov
IP Address: 164.64.62.10

Record Tracking

Status: Original
12/26/2024 9:17:13 AM
Holder: Yvette Anaya
yvette.anaya@gsd.nm.gov
Location: DocuSign

Security Appliance Status: Connected
Pool: StateLocal

Storage Appliance Status: Connected
Pool: General Services Department
Location: DocuSign

Signer Events	Signature	Timestamp
Michael Saavedra michael.saavedra@gsd.nm.gov IT and Const. Bureau Chief New Mexico General Services Security Level: Email, Account Authentication (None) **Electronic Record and Signature Disclosure:** Accepted: 6/4/2020 11:04:51 AM ID: 9cac1b3e-4279-4c8f-b2b4-c607ea9821d8	MS Signature Adoption: Pre-selected Style Using IP Address: 164.64.62.10	Sent: 12/26/2024 9:18:36 AM Viewed: 12/26/2024 9:22:41 AM Signed: 12/26/2024 9:22:54 AM
Yvette Anaya yvette.anaya@gsd.nm.gov Executive Procurement Officer New Mexico General Services Security Level: Email, Account Authentication (None) **Electronic Record and Signature Disclosure:** Not Offered via DocuSign	ya Signature Adoption: Pre-selected Style Using IP Address: 164.64.62.10	Sent: 12/26/2024 9:22:55 AM Viewed: 12/26/2024 9:23:48 AM Signed: 12/26/2024 9:23:53 AM
Dorothy Mendonca dorothy.mendonca@gsd.nm.gov SPD Division Director / State Purchasing Agent General Services Department Signing Group: 35000 - State Purchasing Agent Security Level: Email, Account Authentication (None) **Electronic Record and Signature Disclosure:** Accepted: 4/14/2023 7:24:59 AM ID: 51f6380f-50f7-4227-afb5-572b373dfb7c	Dorothy Mendonca Signature Adoption: Pre-selected Style Using IP Address: 98.60.107.202 Signed using mobile	Sent: 12/26/2024 9:23:54 AM Resent: 12/26/2024 12:27:24 PM Resent: 12/26/2024 1:29:33 PM Viewed: 12/26/2024 2:08:42 PM Signed: 12/26/2024 2:08:49 PM

In Person Signer Events	Signature	Timestamp

Editor Delivery Events	Status	Timestamp

Agent Delivery Events	Status	Timestamp

Intermediary Delivery Events	Status	Timestamp

Certified Delivery Events	Status	Timestamp

Carbon Copy Events	Status	Timestamp

Witness Events	Signature	Timestamp

Notary Events	Signature	Timestamp

Envelope Summary Events	Status	Timestamps
Envelope Sent	Hashed/Encrypted	12/26/2024 9:18:36 AM
Certified Delivered	Security Checked	12/26/2024 2:08:42 PM
Signing Complete	Security Checked	12/26/2024 2:08:49 PM
Completed	Security Checked	12/26/2024 2:08:49 PM

Payment Events	Status	Timestamps

Electronic Record and Signature Disclosure

ELECTRONIC RECORD AND SIGNATURE DISCLOSURE

A. ELECTRONIC RECORD AND SIGNATURE DISCLOSURE (ERSD)

From time to time, New Mexico General Services Department (GSD), on behalf of the State of New Mexico (SONM), may be required by law to provide you with certain written notices or disclosures. Stated below are the terms and conditions for GSD's providing you such notices and disclosures electronically through the DocuSign system. Please read this information carefully. If you are able to access this information electronically and agree to **this Electronic Record and Signature Disclosure (ERSD)**, please confirm your agreement by selecting the check-box next to "I agree to use electronic records and signatures" before clicking "CONTINUE" within the DocuSign system.

B. Obtaining paper copies

At any time up to twenty (20) calendar days following your use of DocuSign to electronically sign a document, you may request a paper copy of any record provided or made available electronically to you by GSD. You will have the ability to download and print documents SONM sends you through the DocuSign system during and immediately after the signing session and, if you elect to create a DocuSign account, you may access the documents for a twenty (20) calendar day period after such documents are first sent to you. Following the twenty (20) day period, if you want GSD to send you paper copies of any such documents from GSD's office, you will be charged a $1.00 per-page fee plus postage. You may request delivery of such paper copies from GSD by following the procedure stated in Section H, below.

C. Withdrawing your consent

If you decide to receive notices and disclosures from GSD electronically, you may at any time change your mind and inform GSD you want to receive required notices and disclosures only in paper format. The procedure concerning how you may inform GSD of your decision to receive future notices and disclosures in paper format as well as withdraw your consent to receive notices and disclosures electronically is stated in Section D, immediately below.

D. Consequences of changing your mind

If you elect to receive required notices and disclosures only in paper format, it will slow the speed with which GSD will be able to complete certain steps in specific transactions and deliver paper copies to you. GSD will need: (1) to send the required notices or disclosures to you in paper format; and (2) wait until GSD receives your acknowledgment of your receipt of such paper notices or disclosures. Further, you will no longer be able to use the DocuSign system to receive required notices and consents electronically from SONM or to electronically sign documents generated and sent to you from SONM.

E. All notices and disclosures will be sent to you electronically

Unless you inform GSD otherwise according to these procedures, GSD will electronically provide you through the DocuSign system all required notices, disclosures, authorizations, acknowledgements and other documents that are required to be provided or made available to you during the course of your electronic signature relationship with SONM. To reduce the possibility of inadvertent non-receipt, GSD prefers to provide all required notices and disclosures by the same method and to the same email or physical address that you furnish to GSD. Thus, you may receive the disclosures and notices electronically or in paper form. If you do not agree with this procedure, please inform GSD according to the procedures stated in Section I, below. Please also refer to Section D, immediately above, which states the consequences resulting from your declination of electronic delivery of notices and disclosures.

F. How to contact GSD:

You may inform General Services Department (GSD) of any changes you select regarding State Purchasing Division's (SPD) electronic communications with you, to request paper copies of certain information from SPD, and to withdraw your prior consent to receive notices and disclosures electronically by emailing your request(s) to SPD at: *GSD.SPDinfo@state.nm.us*

G. To advise SPD of your new email address

To inform SPD of a change in the email address to which SPD sends you notices and disclosures electronically, you must send an email to SPD at *GSD.SPDinfo@state.nm.us* and in the body of such request you must include your previous and new email addresses.

H. To request paper copies from SPD

To request delivery of paper copies of electronic notices and disclosures that DocuSign and/or SPD have previously provided to you, you must send an email to SPD at *GSD.SPDinfo@state.nm.us* and in the body of your email request state your email address, full name, mailing address, and telephone number. SPD will charge you a $1.00 per page copy fee plus postage.

I. To withdraw your consent with SPD

To inform SPD that you no longer wish to receive notices and disclosures in electronic format you may:

(1) Decline to sign a document from within a signing session, and on the subsequent page, select the check-box indicating you wish to withdraw your consent, or you may:

(2) Send SPD an email to *GSD.SPDinfo@state.nm.us* and in the body of your request state your email address, full name, mailing address, and telephone number.

J. Required hardware and software

The minimum system requirements for using the DocuSign system may change over time. The current DocuSign system requirements may be found at:
https://support.docusign.com/guides/signer-guide-signing-system-requirements

K. Acknowledging your access and consent to receive and sign documents electronically

To confirm that you are able to electronically access the information contained in this Electronic Record and Signature Disclosure (ERSD), please confirm that you have: (1) read this ERSD, and either: (2) you are able to print on paper or electronically save this ERSD for your future reference and access; or (3) you are able to email this ERSD to an email address where you will be able to print this ERSD on paper and/or save this ERSD for your future reference and access. Further, if you consent to receiving notices and disclosures from DocuSign and/or SPD exclusively in electronic format, then select the check-box next to "I agree to use electronic records and signatures," before you click "CONTINUE" within the DocuSign system.

By selecting the check-box next to "I agree to use electronic records and signatures," you confirm that:

- You have read this Electronic Record and Signature Disclosure (ERSD); and
- You can print this ERSD on paper, or you can save and/ or send this ERSD to a location where you can print this ERSD, for your future reference and access; and
- Until or unless you notify SPD as stated in this ERSD, you consent to exclusively receive through electronic means all notices, disclosures, authorizations, acknowledgements, and other documents that are required to be provided or made available to you by SPD during the course of your electronic signature relationship with SPD.

DocuSign Envelope ID: E0365BB0-9F8D-4B71-AA3D-06C8EEDCCDE7

State of New Mexico
General Services Department
Purchasing Division

Statewide Price Agreement Amendment

Awarded Vendor: **2 Vendors**

Number: **40-00000-23-00034**

Amendment No.: **One**

Term: **December 29, 2023 – December 28, 2024**

Ship To: **All State of New Mexico agencies, commissions, institutions, political subdivisions and local public bodies allowed by law.**
Invoice: **As Requested at Time of Order**

Procurement Specialist: **Tami Concha** JC

Telephone No.: **(505) 660-3671**

Email: **Tami.Concha@gsd.nm.gov**

Title: **General Construction Services**

This amendment is to be attached to the respective Price Agreement and become a part thereof.

To include Vendor ID Numbers for Vendors (BK) 0000177821 S&G Construction, LLC and (BP) 0000178262 Villalobos Builders, LLC.

Except as modified by this amendment, the provisions of the Price Agreement shall remain in full force and effect.

Accepted for the State of New Mexico

Dorothy Mendonca

Date: 3/27/2024

Dorothy Mendonca
New Mexico State Purchasing Agent

DocuSign

Certificate Of Completion

Envelope Id: E0365BB09F8D4B71AA3D06C8EEDCCDE7
Status: Completed
Subject: Please DocuSign: 40-00000-23-00034 General Construction A001
Source Envelope:
Document Pages: 1
Signatures: 1
Envelope Originator:
Certificate Pages: 5
Initials: 2
Tami Concha
AutoNav: Enabled
1100 S Saint Francis Dr
EnvelopeId Stamping: Enabled
Santa Fe, NM 87502
Time Zone: (UTC-07:00) Mountain Time (US & Canada)
Tami.Concha@gsd.nm.gov
IP Address: 164.64.62.10

Record Tracking

Status: Original
3/27/2024 1:49:34 PM
Holder: Tami Concha
Tami.Concha@gsd.nm.gov
Location: DocuSign
Security Appliance Status: Connected
Pool: StateLocal
Storage Appliance Status: Connected
Pool: GSD
Location: DocuSign

Signer Events	Signature	Timestamp
Michael Saavedra Michael.Saavedra@gsd.nm.gov IT and Const. Bureau Chief New Mexico General Services Security Level: Email, Account Authentication (None), Login with SSO **Electronic Record and Signature Disclosure:** Accepted: 6/4/2020 11:04:51 AM ID: 9cac1b3e-4279-4c8f-b2b4-c607ea9821d8	MS Signature Adoption: Pre-selected Style Using IP Address: 164.64.62.10	Sent: 3/27/2024 1:51:09 PM Viewed: 3/27/2024 1:51:34 PM Signed: 3/27/2024 1:51:46 PM
Tami Concha tami.concha@gsd.nm.gov Const. Supervisor New Mexico General Services, State Purchasing Division Security Level: Email, Account Authentication (None) **Electronic Record and Signature Disclosure:** Not Offered via DocuSign	JC Signature Adoption: Pre-selected Style Using IP Address: 164.64.62.10	Sent: 3/27/2024 1:51:47 PM Viewed: 3/27/2024 1:52:02 PM Signed: 3/27/2024 1:52:07 PM
Dorothy Mendonca dorothy.mendonca@gsd.nm.gov SPD Division Director / State Purchasing Agent General Services Department Signing Group: 35000 - State Purchasing Agent Security Level: Email, Account Authentication (None) **Electronic Record and Signature Disclosure:** Accepted: 4/14/2023 7:24:59 AM ID: 51f6380f-50f7-4227-afb5-572b373dfb7c	Dorothy Mendonca Signature Adoption: Pre-selected Style Using IP Address: 164.64.62.10	Sent: 3/27/2024 1:52:08 PM Viewed: 3/27/2024 1:54:18 PM Signed: 3/27/2024 1:54:22 PM

In Person Signer Events	Signature	Timestamp

Editor Delivery Events	Status	Timestamp

Agent Delivery Events	Status	Timestamp

Intermediary Delivery Events	Status	Timestamp

Certified Delivery Events	Status	Timestamp

Carbon Copy Events	Status	Timestamp

Witness Events	Signature	Timestamp

Notary Events	Signature	Timestamp

Envelope Summary Events	Status	Timestamps
Envelope Sent	Hashed/Encrypted	3/27/2024 1:51:09 PM
Certified Delivered	Security Checked	3/27/2024 1:54:18 PM
Signing Complete	Security Checked	3/27/2024 1:54:22 PM
Completed	Security Checked	3/27/2024 1:54:22 PM

Payment Events	Status	Timestamps

Electronic Record and Signature Disclosure

ELECTRONIC RECORD AND SIGNATURE DISCLOSURE

A. ELECTRONIC RECORD AND SIGNATURE DISCLOSURE (ERSD)

From time to time, New Mexico General Services Department (GSD), on behalf of the State of New Mexico (SONM), may be required by law to provide you with certain written notices or disclosures. Stated below are the terms and conditions for GSD's providing you such notices and disclosures electronically through the DocuSign system. Please read this information carefully. If you are able to access this information electronically and agree to **this Electronic Record and Signature Disclosure (ERSD)**, please confirm your agreement by selecting the check-box next to "I agree to use electronic records and signatures" before clicking "CONTINUE" within the DocuSign system.

B. Obtaining paper copies

At any time up to twenty (20) calendar days following your use of DocuSign to electronically sign a document, you may request a paper copy of any record provided or made available electronically to you by GSD. You will have the ability to download and print documents SONM sends you through the DocuSign system during and immediately after the signing session and, if you elect to create a DocuSign account, you may access the documents for a twenty (20) calendar day period after such documents are first sent to you. Following the twenty (20) day period, if you want GSD to send you paper copies of any such documents from GSD's office, you will be charged a $1.00 per-page fee plus postage. You may request delivery of such paper copies from GSD by following the procedure stated in Section H, below.

C. Withdrawing your consent

If you decide to receive notices and disclosures from GSD electronically, you may at any time change your mind and inform GSD you want to receive required notices and disclosures only in paper format. The procedure concerning how you may inform GSD of your decision to receive future notices and disclosures in paper format as well as withdraw your consent to receive notices and disclosures electronically is stated in Section D, immediately below.

D. Consequences of changing your mind

If you elect to receive required notices and disclosures only in paper format, it will slow the speed with which GSD will be able to complete certain steps in specific transactions and deliver paper copies to you. GSD will need: (1) to send the required notices or disclosures to you in paper format; and (2) wait until GSD receives your acknowledgment of your receipt of such paper notices or disclosures. Further, you will no longer be able to use the DocuSign system to receive required notices and consents electronically from SONM or to electronically sign documents generated and sent to you from SONM.

E. All notices and disclosures will be sent to you electronically

Unless you inform GSD otherwise according to these procedures, GSD will electronically provide you through the DocuSign system all required notices, disclosures, authorizations, acknowledgements and other documents that are required to be provided or made available to you during the course of your electronic signature relationship with SONM. To reduce the possibility of inadvertent non-receipt, GSD prefers to provide all required notices and disclosures by the same method and to the same email or physical address that you furnish to GSD. Thus, you may receive the disclosures and notices electronically or in paper form. If you do not agree with this procedure, please inform GSD according to the procedures stated in Section I, below. Please also refer to Section D, immediately above, which states the consequences resulting from your declination of electronic delivery of notices and disclosures.

F. How to contact GSD:

You may inform General Services Department (GSD) of any changes you select regarding State Purchasing Division's (SPD) electronic communications with you, to request paper copies of certain information from SPD, and to withdraw your prior consent to receive notices and disclosures electronically by emailing your request(s) to SPD at: *GSD.SPDinfo@state.nm.us*

G. To advise SPD of your new email address

To inform SPD of a change in the email address to which SPD sends you notices and disclosures electronically, you must send an email to SPD at *GSD.SPDinfo@state.nm.us* and in the body of such request you must include your previous and new email addresses.

H. To request paper copies from SPD

To request delivery of paper copies of electronic notices and disclosures that DocuSign and/or SPD have previously provided to you, you must send an email to SPD at *GSD.SPDinfo@state.nm.us* and in the body of your email request state your email address, full name, mailing address, and telephone number. SPD will charge you a $1.00 per page copy fee plus postage.

I. To withdraw your consent with SPD

To inform SPD that you no longer wish to receive notices and disclosures in electronic format you may:

(1) Decline to sign a document from within a signing session, and on the subsequent page, select the check-box indicating you wish to withdraw your consent, or you may:

(2) Send SPD an email to *GSD.SPDinfo@state.nm.us* and in the body of your request state your email address, full name, mailing address, and telephone number.

J. Required hardware and software

The minimum system requirements for using the DocuSign system may change over time. The current DocuSign system requirements may be found at:
https://support.docusign.com/guides/signer-guide-signing-system-requirements

K. Acknowledging your access and consent to receive and sign documents electronically

To confirm that you are able to electronically access the information contained in this Electronic Record and Signature Disclosure (ERSD), please confirm that you have: (1) read this ERSD, and either: (2) you are able to print on paper or electronically save this ERSD for your future reference and access; or (3) you are able to email this ERSD to an email address where you will be able to print this ERSD on paper and/or save this ERSD for your future reference and access. Further, if you consent to receiving notices and disclosures from DocuSign and/or SPD exclusively in electronic format, then select the check-box next to "I agree to use electronic records and signatures," before you click "CONTINUE" within the DocuSign system.

By selecting the check-box next to "I agree to use electronic records and signatures," you confirm that:

- You have read this Electronic Record and Signature Disclosure (ERSD); and
- You can print this ERSD on paper, or you can save and/ or send this ERSD to a location where you can print this ERSD, for your future reference and access; and
- Until or unless you notify SPD as stated in this ERSD, you consent to exclusively receive through electronic means all notices, disclosures, authorizations, acknowledgements, and other documents that are required to be provided or made available to you by SPD during the course of your electronic signature relationship with SPD.

DocuSign Envelope ID: 9C0D0BCE-1F94-4323-9C4D-6BA4D233D2D9

State of New Mexico
General Services Department

Statewide Price Agreement

Awarded Vendor:
51 Awarded Vendors, See Pages 6-14 for Detail

Ship To:
All State of New Mexico agencies, commissions, institutions, political subdivisions and local public bodies allowed by law.

Invoice:
As Requested at Time of Order

Price Agreement Number: **40-00000-23-00034**

Payment Terms: **Net 30**

F.O.B.: **Destination**

Delivery: **As Requested**

JC

Procurement Specialist: **Tami Concha**

Telephone No.: **(505) 660-3671**

Email: **Tami.Concha@gsd.nm.gov**

Title: **General Construction Services**

Term: **December 29, 2023 thru December 28, 2024**

This Statewide Price Agreement is made subject to the "terms and conditions" as indicated on subsequent pages.

Accepted for the State of New Mexico

Natalie Martinez

Date: 12/29/2023

Dorothy Mendonca
New Mexico State Purchasing Agent

x **This Agreement was signed on behalf of the State Purchasing Agent**

MS

DocuSign Envelope ID: 9C0D0BCE-1F94-4323-9C4D-6BA4D233D2D9

Terms and Conditions

(Unless otherwise specified)

1. **General:** When the State Purchasing Agent or his/her designee issues a purchase document in response to the Vendor's bid, a binding contract is created.

2. **Variation in Quantity:** No variation in the quantity of any item called for by this order will be accepted unless such variation has been caused by conditions of loading, shipping, packing or allowances in manufacturing process and then only to the extent, if any, specified in this order.

3. **Assignment:**

a. Neither the order, nor any interest therein, nor any claim thereunder, shall be assigned or transferred by the Vendor, except as set forth in Subparagraph 3b or as expressly authorized in writing by the State Purchasing Agent or his/her designee. No such assignment or transfer shall relieve the Vendor from the obligations and liabilities under this order.

b. Vendor agrees that any and all claims for overcharge resulting from antitrust violations which are borne by the State as to goods, services, and materials purchased in connection with this bid are hereby assigned to the State.

4. **State Furnished Property:** State furnished property shall be returned to the State upon request in the same condition as received except for ordinary wear, tear and modifications ordered hereunder.

5. **Discounts:** Prompt payment discounts will not be considered in computing the low bid.

6. **Inspection:** Final inspection and acceptance will be made at the destination. Supplies rejected at the destination for nonconformance with specifications shall be removed at the Vendor's risk and expense, promptly after notice of rejection.

7. **Inspection of Plant:** The State Purchasing Agent or his/her designee may inspect, at any reasonable time, the part of the Contractor's, or any subcontractor's plant or place of business, which is related to the performance of this contract.

8. **Commercial Warranty:** The Vendor agrees that the supplies or services furnished under this order shall be covered by the most favorable commercial warranties the Vendor gives for such to any customer for such supplies or services. The rights and remedies provided herein shall extend to the State and are in addition to and do not limit any rights afforded to the State by any other clause of this order. **Vendor agrees not to disclaim warranties of fitness for a particular purpose of merchantability.**

9. **Taxes:** The unit price shall exclude all state taxes.

10. **Packing, Shipping and Invoicing:**

a. The State's purchasing document number and the Vendor's name, user's name and location shall be shown on each packing and delivery ticket, package, bill of lading and other correspondence in connection with the shipments. The user's count will be accepted by the Vendor as final and conclusive on all shipments not accompanied by a packing ticket.

b. The Vendor's invoice shall be submitted duly certified and shall contain the following information: order number, description of supplies or services, quantities, unit price and extended totals. Separate invoices shall be rendered for each and every complete shipment.

c. Invoices must be submitted to the using agency and NOT the State Purchasing Agent.

11. **Default:** The State reserves the right to cancel all or any part of this order without cost to the State, if the Vendor fails to meet the provisions of this order and, except as otherwise provided herein, to hold the Vendor liable for any excess cost occasioned by the State due to the Vendor's default. The Vendor shall not be liable for any excess costs if failure to perform the order arises out of causes beyond the control and without the fault or negligence of the Vendor, such causes include but are not restricted to, acts of God or the public enemy, acts of the State or Federal Government, fires, floods, epidemics, quarantine restrictions, strikes, freight embargoes, unusually severe weather and defaults of subcontractors due to any of the above, unless the State shall determine that the supplies or services to be furnished by

DocuSign Envelope ID: 9C0D0BCE-1F94-4323-9C4D-6BA4D233D2D9

the subcontractor were obtainable from other sources in sufficient time to permit the Vendor to meet the required delivery scheduled. The rights of the State provided in this paragraph shall not be exclusive and are in addition to any other rights now being provided by law or under this order.

12. **Non-Collusion:** In signing this bid the Vendor certifies he/she has not, either directly or indirectly, entered into action in restraint of free competitive bidding in connection with this offer submitted to the State Purchasing Agent or his/her designee.

13. **Nondiscrimination:** Vendor doing business with the State of New Mexico must be in compliance with the Federal Civil Rights Act of 1964 and Title VII of the Act (Rev. 1979) and the Americans with Disabilities Act of 1990 (Public Law 101-336).

14. **The Procurement Code:** Sections 13-1-28 through 13-1-199 NMSA 1978, imposes civil and criminal penalties for its violation. In addition the New Mexico criminal statutes impose felony penalties for bribes, gratuities and kickbacks.

15. **Items:** All bid items are to be NEW and of most current production, unless otherwise specified.

16. **Payment for Purchases:** Except as otherwise agreed to: late payment charges may be assessed against the user state agency in the amount and under the conditions set forth in Section 13-1-158 NMSA 1978.

17. **Workers' Compensation:** The Contractor agrees to comply with state laws and rules pertaining to Workers' Compensation benefits for its employees. If the Contractor fails to comply with Workers' Compensation Act and applicable rules when required to do so, this Agreement may be terminated by the contracting agency.

18. **Submission of Bid:** Bids must be submitted in a sealed envelope with the bid number and opening date clearly indicated on the bottom left hand side of the front of the envelope. Failure to label bid envelope will necessitate the premature opening of the bid in order to identify the bid number.

19. **Contractor Personnel**: Personnel proposed in the Contractor's written bid to the Procuring Agency are considered material to any work performed under this Price Agreement. Once a Purchase Order or contract has been executed, no changes of personnel will be made by the Contractor without prior written consent of the Procuring Agency. Replacement of any Contractor personnel, if approved, shall be with personnel of equal ability, experience, and qualifications. The Contractor will be responsible for any expenses incurred in familiarizing the replacement personnel to insure their being productive to the project immediately upon receiving assignments. Approval of replacement personnel shall not be unreasonably withheld. The Procuring Agency shall retain the right to request the removal of any of the Contractor's personnel at any time.

20. **Subcontracting:** The Contractor shall not subcontract any portion of the Price Agreement without the prior written approval of the Procuring Agency. No such subcontracting shall relieve the Contractor from its obligations and liabilities under this Price Agreement, nor shall any subcontracting obligate payment from the Agency.

21. **Records and Audit:** The Contractor shall maintain detailed time and expenditure records that indicate the date, time, nature, and cost of services rendered during this Price Agreement's term and effect, and retain them for a period of three (3) years from the date of final payment under this Price Agreement. The records shall be subject to inspection by the Agency, State Purchasing Division, Department of Finance and Administration, and for Information Technology contracts, State Chief Information Officer. The Agency shall have the right to audit billings, both before and after payment. Payment for services under this Price Agreement shall not foreclose the right of the Agency to recover excessive or illegal payments.

22. **Subcontracts:** The foregoing requirements for Contractor Personnel, Subcontracting, and Audit shall be inserted into all subcontracts from the prime contractor to the subcontractor.

New Mexico Employees Health Coverage

A. If Contractor has, or grows to, six (6) or more employees who work, or who are expected to work, an average of at least 20 hours per week over a six (6) month period during the term of the contract, Contractor certifies, by signing this agreement, to have in place, and agrees to maintain for the term of the contract, health insurance for its New Mexico

DocuSign Envelope ID: 9C0D0BCE-1F94-4323-9C4D-6BA4D233D2D9

Employees and offer that health insurance to its New Mexico Employees if the expected annual value in the aggregate of any and all contracts between Contractor and the State exceeds $250,000 dollars.

B. Contractor agrees to maintain a record of the number of its New Mexico Employees who have (a) accepted health insurance; (b) declined health insurance due to other health insurance coverage already in place; or (c) declined health insurance for other reasons. These records are subject to review and audit by a representative of the state.

C. Contractor agrees to advise all of its New Mexico Employees of the availability of State publicly financed health care coverage programs by providing each of its New Mexico Employees with, as a minimum, the following web site link to additional information: https://bewellnm.com.

D. For purposes of this Paragraph, the following terms have the following meanings:

(1) "New Mexico Employee" means any resident of the State of New Mexico employed by Contractor who performs the majority of the employee's work for Contractor within the State of New Mexico, regardless of the location of Contractor's office or offices; and

(2) "offer" means to make available, without unreasonable restriction, enrollment in one or more health coverage plans and to actively seek and encourage participation in order to achieve the goals of Executive Order 2007-049. This could include State publicly financed public health coverage programs such as *Insure New Mexico!*

Statewide Price Agreement

Article I – Statement of Work
Under the terms and conditions of this Price Agreement all State of New Mexico agencies, commissions, institutions, political subdivisions and local public bodies allowed by law may issue orders for items and/or services described herein. The terms and conditions of this Price Agreement shall form a part of each order issued hereunder.

The items and/or services to be ordered shall be as listed under Article IX - Price Schedule. All orders issued hereunder will bear both an order number and this Price Agreement number. It is understood that no guarantee or warranty is made or implied by the New Mexico State Purchasing Agent, his/her designee or the user that any order for any definite quantity will be issued under this Price Agreement. The Contractor is required to accept the order and furnish the items and/or services in accordance with the articles contained hereunder for the quantity of each order.

Article II – Term
The term of this Price Agreement, for issuance of orders, shall be as indicated in the specifications.

Article III – Specifications
Items and/or services furnished hereunder shall conform to the requirements of specifications and/or drawings applicable to items listed under Article IX-Price Schedule. Orders issued against this schedule will show the applicable Price Agreement item(s), number(s), and price(s); however they may not describe the item(s) fully.

Article IV – Shipping and Billing Instructions
Contractor shall ship in accordance with the following instructions: Shipment shall be made only against specific orders which the user may place with the Contractor during the term; The Contractor shall enclose a packing list with each shipment listing the order number, price agreement number and the commercial parts number (if any) for each item; Delivery shall be made as indicated on page1. If vendor is unable to meet stated delivery the State Purchasing Agent or his/her designee must be notified.

Article V – Termination
The Agency may terminate this Agreement for convenience or cause. The Contractor may only terminate this Agreement based upon the Agency's uncured, material breach of this Agreement. Contractor shall give Agency written notice of termination at least thirty (30) days prior to the intended date of termination, which notice shall (i) identify all the Agency's material breaches of this Agreement upon which the termination is based and (ii) state what the Agency must do to cure such material breaches. Contractor's notice of termination shall only be effective (i) if the Agency does not cure all material breaches within the thirty (30) day notice period or (ii) in the case of material breaches that cannot be cured within thirty (30) days, the Agency does not, within the thirty (30) day notice period, notify the Contractor of its intent to cure and begin with

DocuSign Envelope ID: 9C0D0BCE-1F94-4323-9C4D-6BA4D233D2D9

due diligence to cure the material breach. Termination of this Contract, however, shall not affect any outstanding orders. This provision is not exclusive and shall not waive other rights and remedies afforded either party in the event of breach of contract or default. In such instances the contract may be cancelled effective immediately.

Article VI – Amendment
This Price Agreement may be amended by mutual agreement of the New Mexico State Purchasing Agent or his/her designee and the Contractor upon written notice by either party to the other. An amendment to this Price Agreement shall not affect any outstanding orders issued prior to the effective date of the amendment as mutually agreed upon, and as published by the New Mexico State Purchasing Agent or his/her designee. Amendments affecting price adjustments and/or the extension of a price agreement expiration date are not allowed unless specifically provided in the bid and price agreement specifications.

Article VII – Indemnity Clause
Contractor shall indemnify and hold harmless the State, its officers and employees, against liability, claims, damages, losses or expenses arising out of bodily injury to persons or damage to properties caused by, or resulting from Contractor's, and/or its employees, own negligent act or omission while Contractor, and/or its employees, perform or fails to perform its obligations and duties under the Terms and Conditions of this agreement. This save harmless and indemnification clause is subject to the immunities, provisions, and limitations of the Tort Claims Act (Section 41-4-1, et seq., N.M.S.A. 1978 comp. and Section 57-7-1 N.M.S.A. 1878 comp. and any amendments thereto.

It is specifically agreed between the parties executing this agreement that it is not intended by any of the provisions of any part of the agreement to create in the public or any member thereof a third party beneficiary or to authorize anyone not a party to the agreement to maintain a suit(s) for wrongful death(s), bodily and/ or personal injury(s) to person(s), damage(s) to property(ies) and/or any other claim(s) whatsoever pursuant to the provisions of this agreement.
Vendor shall provide all insurance necessary to employees on the work site, including but not limited to Worker's Compensation.

Article VIII – Issuance or Orders
Only written signed orders are valid under this Price Agreement.

Article IX – Packing (if applicable)
Packing shall be in conformance with standard commercial practices.

Article X – Price Schedule
Prices as listed in the price schedule hereto attached are firm.

DocuSign Envelope ID: 9C0D0BCE-1F94-4323-9C4D-6BA4D233D2D9

Awarded Vendors:

(AA) 0000073450
3 B Builders, Inc.
1770 Hamilton Ln
Bosque Farms, NM 87068
Matthew Budagher (505) 553-0544
matt.3bbuilders@gmail.com

Payment Term: Net 30
Delivery: As Requested
Public Works: 3039120140518
License: 352730

(AB) 0000053415
Advanced Environmental Solutions, Inc.
2318 Roldan Drive
Belen, New Mexico 87002
Andy Saiz (505) 450-8953
asaiz@aesnm.com

Payment Term: Net 30 Days
Delivery: Per Contract Specs
Public Works: 74620050716
License: 83422

(AC) 0000107401
All Rite Construction, Inc.
dba RiteCon
PO Box 67904
Albuquerque, NM 87193
Meshach Alvarado (505) 344-7663
meschach@ritecon.com

Payment Term: Net 30
Delivery: FOB
Public Works: 3057620140914
License: 82136

(AD) 0000009253
Allied Electric, Inc.
PO Box 28430
Santa Fe, NM 87592-8430
George Maestas (505) 660-1327
george@alliednm.com

Payment Term: Net 30
Delivery: As Requested by owner
Public Works: 1365320100416
License: 351269

(AE) 0000054601
AnchorBuilt, Inc.
PO Box 27688
Albuquerque, NM 87125
Raymond Zamora 505.342.2452
ray.zamora@anchorbuilt.com

Payment Term: Net 30
Delivery: Destination
Public Works: 2492520120713
License: 81458

DocuSign Envelope ID: 9C0D0BCE-1F94-4323-9C4D-6BA4D233D2D9

(AF) 0000046277
B & D Industries, Inc.
PO Box 561617
Denver, CO 80256
Jamie Westerfield 505-332-9841
jwesterfield@banddindustries.com

Payment Term: Net 30
Delivery: F.O.B. Destination
Public Works: 191702011629
License: 1426

(AG) 0000083208
Boyd Construction, LLC
1000 Cordova Pl. #987
Santa Fe, NM 87505
Lawrence Boyd 505 699-4787
Lboyd1888@aol.com

Payment Term: Net 30
Delivery: 1000 Cordova Pl 987 Santa Fe, NM 87505
Public Works: 26114334852023
License: 411057

(AH) 0000051994
Classic Industries, Inc.
P.O. Box 434
Dona Ana, NM 88032
Richard J. Lara 575-523-2053
office@classicindincnm.com

Payment Term: Net 30
Delivery: As requested per requirements per award
Public Works: 897720090125
License: 55595

(AI) 0000174779
Colt Builders, Inc.
5304 Raton HWY
Des Moines, New Mexico 88418
Lonnie Cruz 505-850-3312
lonnie@coltbuildersinc.com

Payment Term: Net 30
Delivery: Destination
Public Works: 28141371662017
License: 92919

(AJ) 0000138100
Consolidated Builders of NM, LLC
PO Box 26785
Albuquerque, NM 87125
Manuel Apodaca 505 873 6139
consolidatedbuilders@comcast.net

Payment Term: Net 30
Delivery: 116 Veranda Rd NW
Albuquerque, NM 87107
Public Works: 2548820121019
License: 59613

(AK) 0000170527
Cordova Contracting & Development, LLC
7411 Hancock Ct. NE
Albuquerque, NM 87109
Mark A. Cordova (505) 243-9675
purchasing@cordovallc.com

Payment Term: Net 30
Delivery: As requested.
Public Works: 25224592712018
License: 85391

DocuSign Envelope ID: 9C0D0BCE-1F94-4323-9C4D-6BA4D233D2D9

(AL) 0000116075
Davenport Construction Management LLC
141 Camino de las Crucitas
Santa Fe NM 87501
Mitchel Davenport 505-660-7105
mitch@dcmnm.com

Payment Term: Net 30
Delivery: 3201 Mercantile Court, Suite A
Santa Fe NM 87507
Public Works: 2901220130531
License: 369676

(AM) 0000170503
Elite Communications & Construction LLC
1950 Bosque Farms Blvd
Bosque Farms, NM 87068
Gabe Trujillo 505-295-8000
gabe@elitenm.com

Payment Term: Net 30
Delivery: As requested, job site, or yard location at
1950 Bosque Farms Blvd
Bosque Farms NM 87068
Public Works: 28148871042020
License: 391781

(AN) 0000049445
ESA Construction, Inc.
3435 Girard Blvd. NE
Albuquerque, NM 87107
Steven C. Pannell 505-884-2171 X102
spannell@esaconstruction.com

Payment Term: Net 30
Delivery: As required by contract or purchase order.
Public Works: 13420060701
License: 28493

(AO) 0000043596
First Mesa Construction, Inc.
PO Box 92258
Albuquerque, NM 87199-2258
Scott Butterbaugh (505) 250-1468
scott@firstmesa.net

Payment Term: Net 30
Delivery: As Requested
Public Works: 2545020121012
License: 59346

(AP) 0000086357
Four Winds Mechanical HTC/AC
8915 Adams ST NE, Suite B
Albuquerque, NM 87113
Chualing "Lynn" Armijo 505-908-0090
lynn@4windsmechanical.com

Payment Term: Net 30
Delivery: 24 hours
Public Works: 2885820130507
License: 82333

(AQ) 0000049692
Franken Construction Company, Inc.
1025 Douglas Avenue
Las Vegas, NM 87701
Brent Franken 505-429-1962
brentfranken@frankenconstruction.com

Payment Term: Net 30
Delivery: Contractors Yard or Jobsite Address
Public Works: 3045220140628
License: 7750

DocuSign Envelope ID: 9C0D0BCE-1F94-4323-9C4D-6BA4D233D2D9

(AR) 0000154826
Fulcrum Contracting LLC
5400 Sanban Drive
Las Cruces, NM 88005
Robert Macias 575-496-2802
robert@fulcrum-contracting.com

Payment Term: Net 30
Delivery: As Requested
Public Works: 28522410262020
License: 402807

(AS) 0000090285
GM Emulsion LLC
5935 Agua Fria Street,
Santa Fe, NM 87507
Fred Marquez 505-471-9981
fred@gmemulsion.com

Payment Term: Net 30
Delivery: As Requested
Public Works: 2461320120530
License: 370602

(AT) 0000141388
GME General Building LLC
3225 Richard's Lane Unit A
Santa Fe, New Mexico 87507
Erik Trujillo 505-690-7438
erik@gmegeneralbuilding.com

Payment Term: Net 30
Delivery: As Requested
Public Works: 28325764732018
License: 396923

(AU) 0000125463
Global Maven Enterprises, LLC
Po Box 2016
Las Cruces, NM 88004
Azzam Askar 575-571-7417
customerservice@gmellcusa.com

Payment Term: Net 30
Delivery: 1065 S. Main St. Building D Suite E
Las Cruces, NM 88005
Public Works: 1761920150824
License: 389804

(AV) 0000052470
HEI, Inc.
PO Box 31310
Albuquerque, New Mexico 87190
Jesse Luna 505-880-1819
jluna@heinm.com

Payment Term: Net 30
Delivery: F.O.B. Destination
Public Works: 2495720120723
License: 61439

(AW) 0000046616
Highland Enterprises, Inc.
PO Box 2409
Las Cruces, NM 88004
Mark Hettinga 575-524-3551
hei@highlandnm.com

Payment Term: Net 30
Delivery: As Requested
Public Works: 971920090606
License: 4460

DocuSign Envelope ID: 9C0D0BCE-1F94-4323-9C4D-6BA4D233D2D9

(AX) 0000127038
Illmatic Construction Inc.
520 Barela Lane
Santa Fe, NM 87505
Joann Sandoval 505-920-1951
illmatic505@gmail.com

Payment Term: Net 30
Delivery: as requested
Public Works: 21617625602016
License: 91673

(AY) 0000129254
JRM Construction Co, LLC
2620 Via Berrenda
Santa Fe, NM, 87505
Joe Robert Mendez Jr. 505-920-9768
jrmconstruction65@yahoo.com

Payment Term: Net 30
Delivery: FOB DESTINATION
Public Works: 28112303762022
License: 372261

(AZ) 0000167639
Jaypen Construction LLC
101 B Paseo Nopal
Santa Fe, NM 87507
Jeremy Martinez 505-920-0710
jeremy.jaypenconst@gmail.com

Payment Term: Net 30
Delivery: As Requested
Public Works: 28738509952022
License: 406984

(BA) 0000174921
L Martinez Construction LLC
P.O. Box 662
Santa Cruz, New Mexico 87567
Lionel Martinez (505) 614-6007
llmartinezconst@gmail.com

Payment Term: Net 30
Delivery: As Requested
Public Works: 29214840592023
License: 410900

(BB) 0000111171
LLR Construction, LLC
2015 Wyoming Blvd. NE Suite I
Albuquerque NM 87112
Doug Langley 505-850-4533
doug@llrconstructionnm.com

Payment Term: Net 30
Delivery: 2015 Wyoming Blvd. NE Suite I
Albuquerque NM 87112
Public Works: 3009120130927
License: 371032

(BC) 0000138553
Nine Degrees Construction, LLC
101 Maguey Ct. Suite 2
Sunland Park, NM 88063
Cesar Molina 915-526-8739
cesarm@nine-degrees.com

Payment Term: Net 30
Delivery: Same as remit address
Public Works: 24651036262017
License: 381568

DocuSign Envelope ID: 9C0D0BCE-1F94-4323-9C4D-6BA4D233D2D9

(BD) 0000049258
Northern Mountain Constructors, Inc.
PO Box 348
El Prado, NM 87529
Claire Moore 575-758-4395
claire@nmconstructors.com

Payment Term: Net 30
Delivery: as requested
Public Works: 3046520140706
License: 27983

(BE) 0000114869
Pluma, LLC
6301 4th St. NW Suite 1
Albuquerque, NM 87107
Kodi (505) 345-0755
kodi@plucys.com

Payment Term: Net 30
Delivery: As Requested
Public Works: 1755520150602
License: 387286

(BF) 0000148381
Prestigious Paving, LLC
2706 Chamisal Avenue
Gallup NM 87301
Zane Munoz 505-488-2333
prestigiouspaving@gmail.com

Payment Term: Net 30
Delivery: As Requested
Public Works: 28419195262022
License: 401665

(BG) 0000116761
Prime Builders, LLC
P.O. Box 91480
Albuquerque, NM 87199
Eric Peterson 505-924-0455
epeterson@primebuildersnm.com

Payment Term: Net 30
Delivery: As requested
Public Works: 2496820120723
License: 365323

(BH) 0000132517
R and M Construction, LLC
PO Box 1026
Alcalde, NM 87511
Robert Sanchez 505-927-2027
robert@rmconstructionnm.com

Payment Term: Net 30
Delivery: Email - robert@rmconstructionnm.com
Public Works: 2416920120330
License: 367912

(BI) 0000142264
Red Seven Electric LLC
PO Box 181
Jarales, NM 87023
Manuel Medina 505-859-5414
mmedina@redsevenelectric.com

Payment Term: Net 30
Delivery: As Requested
Public Works: 28211398962018
License: 391745

DocuSign Envelope ID: 9C0D0BCE-1F94-4323-9C4D-6BA4D233D2D9

(BJ) 0000135923
Road Runer Plaster & Drywall, LLC
3272 Ojos De Jo
Santa Fe, NM 87507
Alvaro Ivan Erives 505 670-3426
IvanRoadRunner@live.com

Payment Term: Net 30
Delivery: As requested
Public Works: 22733316402017
License: 367027

(BK) Not in SHARE
S&G Construction, LLC
21 Lumbre Del Sol
Espanola, NM 87532
Sukhwinder Singh 505-603-4969
swscfo@gmail.com

Payment Term: Net 30
Delivery: Job Order Contracting
Public Works: 29220605632023
License: 60248

(BL) 0000009789
SDV Construction, Inc.
8912 Adams St NE
Albuquerque, NM 87113
Paul Farless 505-883-3176
estimating@sdvconstruction.com

Payment Term: Net 30
Delivery: Destination
Public Works: 168920070104
License: 92744

(BM) 0000076453
Sanchez Demolition Inc.
PO Box 721
Bosque, NM 87006
Michael Lovato 505-864-7551
sanchezdemolition@gmail.com

Payment Term: Net 30 days from receipt of invoice
Delivery: 16 Miranda Rd. Veguita, NM 87062
Public Works: 1745120150208
License: 359736

(BN) 0000137030
Sweep Construction
4904 Jefferson St NE Suite E,
Albuquerque, New Mexico, 87109
Sara Petersen 505-881-1461
sweepconstruction@gmail.com

Payment Term: Net 30
Delivery: as requested
Public Works: 2255620110606
License: 369821

(BO) 0000170501
The Aisling Company, LLC
2327 State Rd. 1
Socorro, NM 87801
Casey A. Spurgin 505-871-1000
info@aislingco.com

Payment Term: 21 days after submission
Delivery: As Requested, Scheduled
Emergency response with 24-48 hrs.
Public Works: 28231792042019
License: 393602

DocuSign Envelope ID: 9C0D0BCE-1F94-4323-9C4D-6BA4D233D2D9

(BP) Not in SHARE
Villalobos Builders, LLC
4711 Grand Avenue NE
Albuquerque, NM 87108
Myra E Villalobos (505) 235-9293
villalobosbuildersllc@outlook.com

Payment Term: Net 30
Delivery: As requested
Public Works: 28632742872023
License: 405579

(BQ) 0000051414
WWRC, Inc.
1716 W. 7th
Clovis, NM 88101
Rocky Martin (575) 769-2618
Orders/Sales wwrc@wwrcinc.com

Payment Term: Net 30 days
Delivery: As Requested
Public Works: 100222009703
License: 54124

(BR) 0000009760
Weil Construction, Inc.
3344 Princeton Dr. NE,
Albuquerque, NM 87107
Orders/Sales: (505) 899-3535
c.mcmahan@weilconstruction.com

Payment Term: Net 30
Delivery: As Requested
Public Works: 3027220140401
License: 92233

(BS) 0000052947
Western Mechanical Co.
dba Western Mechanical HVAC & Plumbing
3301 Girard Blvd NE
Albuquerque NM, 87107
Orders/Sales: (505) 341-4458
mike.westernmechanical@gmail.com

Payment Term: 30 Days
Delivery: Email
Public Works: 2888620130507
License: 82364

(BT) 0000050416
White Sands Construction, Inc.
1700 10th Street
Alamogordo, NM 88310
Catlin (575) 437-7816
catlin@whitesandsconstruction.com

Payment Term: Net 30
Delivery: 1700 10th Street Alamogordo, NM 88310
Public Works: 115042009091
License: 50235

DocuSign Envelope ID: 9C0D0BCE-1F94-4323-9C4D-6BA4D233D2D9

(BU) 0000150396
Justin Wilson
dba Wilson Construction Services, LLC
123 Buckboard Trl.
Nogal, NM 88341
Orders/Sales: Christina 303-242-2631
wilsonconstruction2020@gmail.com

Payment Term: Net 30
Delivery: As Requested
Public Works: 28442702582022
License: 401335

(BV) 0000091459
Rogers, Yei
dba Wizer Electric, LLC
6017 Del Carmen Rd NE
Rio Rancho, NM 87144
Gabriel Rodriguez 505-771-4973
gabe.wizerelectric@yahoo.com

Payment Term: Net 30
Delivery: 6017 Del Carmen Rd NE
Rio Rancho, NM 87144
Public Works: 2428320120413
License: 369333

(BW) 0000177783
Young Guns Construction, LLC
3485 Highway 47
Los Lunas, New Mexico 87031
John Trujillo (505) 415-0444
ygc.llc@yahoo.com

Payment Term: Net 30
Delivery: FOB: Destination Delivery: As Required
Public Works: 28508000422023
License: 408709

(BX) 0000012754
FacilityBUILD, Inc.
5904 Florence Ave, NE
Albuquerque, NM 87113
Cameron Kilcup (505) 828-0060
camkilcup@facilitybuild.com

Payment Term: Net 30
Delivery: As Requested
Public Works: 187432011601
License: 88676

(BY) 0000082084
Munoz Corporation
PO Box 850
Gallup, NM 87301
George Munoz (505) 722-6570
munozcorp@yahoo.com

Payment Term: Net 30
Delivery: As Requested
Public Works: 28504398162023
License: 59907

DocuSign Envelope ID: 9C0D0BCE-1F94-4323-9C4D-6BA4D233D2D9

Specifications:
Establish a Statewide Price Agreement for on-call general construction services work by New Mexico licensed contractors to provide miscellaneous repairs, upgrades, improvements and new construction services for facilities and properties throughout the state of New Mexico. This Price Agreement may be utilized by all New Mexico State Agencies, commissions, political subdivisions and local public bodies applicable by law (using agency or local public body).

Term:
The term of this Price Agreement shall be for one (1) year from date of award with the option to extend for a period of two (2) additional years, on a year-to-year basis, by mutual agreement of all parties and approval of the New Mexico State Purchasing Agent at the same price, terms and conditions. This Price Agreement shall not exceed three (3) years.

Compensation Caps:
The total cost of each project, shall not exceed Four Million Dollars ($4,000,000.00). This cap includes all change orders associated with the project. Since NMSA 1978 Section 13-1-154.1 sets the cap thresholds, if modified during the term of this Agreement, any revisions to the NMSA will apply.

Legislation Affecting Price Agreement:
If future legislation affects any terms or conditions of the Price Agreement the Price Agreement may be amended to comply with the legislation.

Insurance:
The Contractor shall provide all insurance necessary for its employees on the project, including, but not limited to, Workman's Compensation Insurance. The Contractor agrees to comply with state laws and rules pertaining to Workers' Compensation Insurance coverage for its employees. If the Contractor fails to comply with the Workers' Compensation Act and applicable rules, when required to do so, this Price Agreement will be cancelled immediately.

Contractor shall indemnify and hold harmless the State and local public body, its officers, and employees, against liability, claims, damages, losses, or expenses arising out of bodily injury to persons or damage to properties caused by, or resulting from, Contractor's and/or its employees, own negligent acts or omissions while Contractor, and/or its employees perform or fail to perform its obligations and duties under the terms and conditions of this Price Agreement. This Save Harmless and Indemnification Clause is subject to the immunities, provisions, and limitations of the Tort Claims Act (Section 41-4-1, et seq., NMSA 1978 Comp. and Section 56-7-1 NMSA 1978 Comp.) and any amendments thereto.

It is specifically agreed between the parties executing this Price Agreement that it is not intended by any of the provisions of any part of the Price Agreement to create the public or any member hereof a third party beneficiary or to authorize anyone not a party to the Price Agreement to maintain a suit for wrongful death, bodily and/or personal injury to persons, damage to properties and/or other claims whatsoever pursuant to the provisions of this Price Agreement.

The Contractor shall provide public liability insurance for the minimum amount of one hundred thousand dollars ($100,000) for damage to or destruction of property arising out of each occurrence; the amount of three hundred thousand dollars ($300,000) to any person for any number of claims arising out of each occurrence for all damages other than property damage as permitted under the New Mexico Tort Claims Act; and the amount of five hundred thousand dollars ($500,000) for all claims arising out of each occurrence. Umbrella or excess liability coverage shall not be considered as any part of the primary coverage.

The vendor shall request from his insurer that the agency or local public body be named "Additional Insured" on an insurance certificate showing the vendor's insurance coverages.

All work covered by this Invitation to Bid shall be in accordance with applicable state laws, the International Building Code (IBC) and New Mexico building codes and is subject to the minimum wage rate determination issued by the New Mexico Department of Workforce Solutions, if applicable.

DocuSign Envelope ID: 9C0D0BCE-1F94-4323-9C4D-6BA4D233D2D9

Wage Rates:
All work covered by this Invitation to Bid shall be in accordance with applicable state laws and is subject to the minimum wage rate determination issued by the Department of Workforce Solutions (DWS), if applicable.

A wage rate decision is required by the Public Works Minimum Wage Act for construction, demolition or renovation purposes on projects costing sixty thousand dollars ($60,000) or more and funded in part by state or local funding. The Contractor agrees to comply with the current prevailing wage rate schedule when applicable. For current wage rates or for additional information, visit: http://www.dws.state.nm.us. The agency or local public body will request a wage rate determination from the DWS.

Bonding:
A one hundred percent (100%) performance bond and a one hundred percent (100%) payment and material bond executed by a surety company authorized to do business in the state of New Mexico will be required of the successful bidder(s) prior to each project over twenty-five thousand dollars ($25,000). Said bonds must be provided to the requesting agency and are to be filed with the agencies purchasing office. Failure to comply shall result in the order being issued to another vendor and the difference being charged back to the awarded Contractor(s). The cost of the bonds may be passed on to the agency or local public body.

A Subcontractor shall provide a performance and payment bond on a public works building project if the subcontractor's contract (to the Contractor) for work to be performed on a project is one hundred and twenty-five thousand dollars ($125,000) or more. Failure of a Subcontractor to provide required bond shall not subject the Owner to any increase in cost due to any substitution of an approved Subcontractor.

Other:
The awarded Contractor shall be responsible for all permits associated with this work as required by the State of New Mexico Construction Industries Division (CID) or the local Authority Having Jurisdiction (AHJ). The CID will issue permits for work performed at state-owned buildings.

Escalation / Reduction Clause:
Contractor shall keep pricing fixed for each year of this Agreement. Thereafter, SPD and the Contractor may adjust pricing no more than once annually through an amendment to the Agreement at the time of Agreement renewal. Contractor shall submit all pricing increase requests to SPD directly or through the agency contact in writing and provide substantiating evidence that each request is based on demonstrable market changes impacting the cost of products. The request must show all proposed increases by line item and include supporting documentation acceptable to SPD (such as a letter from a manufacturer indicating price increases, etc.) SPD's decision on what is acceptable in this context is final and shall be accepted by all parties to the Agreement. ***Requested price increases that exceed 10% will not be accepted*.** **No** price increase may result in a higher profit margin for the Contractor than at the beginning of the initial term of this Agreement. Pricing changes will apply to Agreements and amendments to Agreements entered on and after the effective date of the price change. Price decreases as well as increases shall apply in the same manner. If vendor's prices are reduced for any reason, users shall receive the benefit of such reductions, immediately. Price increases will not be retroactive to orders already in house or backorders. Orders will be filled at the price in effect on the date of receipt of the order by the vendor. To facilitate prompt consideration, all requests for price increase must include all information listed below:

1. Agreement Item Number
2. Current Item Price
3. Proposed New Price
4. Percentage of Increase
5. Mill/Supplier Notification of price increase indicating percentage of increase including reason for increase.

Contractor Note:
No person shall act as a Contractor without a license issued by the Construction Industries Division, classified to cover the type of work to be performed. No bid on a contract shall be submitted unless the Contractor has a valid Contractor's

DocuSign Envelope ID: 9C0D0BCE-1F94-4323-9C4D-6BA4D233D2D9

license issued by the CID to bid and to perform the type of work to be undertaken, as set forth in § 60-13-12, NMSA 1978.

Contractor shall provide the following information:

Contractor's New Mexico license no.: _____
Contractor's classification no.: _____
State tax identification no.: _____
Public Works Registration Number*: _____
*Pursuant to: 13-4-13.1 Public Works Contracts; Registration of Contractors and Subcontractors

When submitting a quote for a specific project valued at more than sixty thousand dollars ($60,000) for any portion of a public works project greater than sixty thousand dollars ($60,000) that is subject to the New Mexico Public Works Act, the Contractor is required to be registered with the Labor and Industrial Division of the Department of Workforce Solutions prior to submitting its quote. The using agency may reject any quote that fails to provide a Public Works Registration Number for the prime Contractor and all other listed Contractors or subcontractors. In order to submit a bid for this invitation to bid the bidder must have an Active registration for the Public Works Act.

The Contractor will be contacted on an as needed, on-call basis to perform work associated with this Price Agreement. A Price Agreement award is without assurance of quantity or dollar amount of work to be performed. Failure to respond to the Using Agency's requests may be grounds for termination of this Price Agreement. Awards for these services will be made on a statewide basis. If the awarded contractor does not wish to travel to other parts of the State, it is acceptable to decline work.

Scope of Work:
Contractors shall provide their cost for performing all the work called for in the Using Agency's scope of work for the project. Projects may be of short or long term duration, throughout the state.

Contractors shall have the technical staff to perform diagnostic services; provide incidental design services as needed; and to provide professionally prepared, stamped drawings, if needed, to obtain installation or construction permits. The Contractor is responsible for obtaining all required licenses, fees and permits required by government agencies to perform the work.

Contractors shall be 'licensed Contractors" capable of providing all coordination, supervision and services required for comprehensive general building construction, renovations, upgrade and improvement projects and to provide new construction services including incidental design. The scope of an individual project may include equipment, fixtures and furniture whether attached or not to the building. It can include site and utility work including landscaping and parking lot/ minor road/ minor bridge work. The utility work can include building power systems such as solar panels, geothermal systems, water sourcing systems, water treatment and waste disposal/treatment systems. It may also include demolition and abatement projects. Identification and abatement of asbestos containing materials (ACM) may be performed under separate contracts. It can also include security and other low voltage installations with related controls and equipment.

Contractors shall provide all materials, labor, equipment and tools required to successfully complete the work requested. The Contractors shall be capable of providing a work force with supervision, adequate to perform work for a forty (40) hour work week during normal working hours with the option of working non normal or overtime hours if required.

Replacement systems and related equipment shall meet current minimum state mandated "Energy Star" energy conservation standards.

Subcontracting of work is allowed and shall be prior approved by the Using Agency. Subcontractors shall have the appropriate current and valid Contractor's licenses for their work. And shall furnish proof upon request.

DocuSign Envelope ID: 9C0D0BCE-1F94-4323-9C4D-6BA4D233D2D9

Furnishing of submittal data for any/all new equipment and materials as well as O&M's when either/or are required, and deemed necessary for the facility is required. Training of site personnel for the proper operation of newly installed equipment/systems and its related controls will be performed and required for completion. This training must be acceptable to the person in charge of the facility.

Replacement mechanical/electrical/plumbing systems and related equipment shall meet current minimum state mandated "Energy Star" energy conservation standards.

The Contractor shall provide all protective coverings necessary to protect existing, adjacent finishes while performing its work. If any damage is encountered during the contractor's work, to other areas, the contractor will be held responsible for repairing any damage done by his employees, subcontractors and vendors.

The Contractor shall, at his own cost, restore any damage to existing, adjacent finishes damaged as a result of performing its work and to make new work inconspicuous with the existing, adjacent finishes.

The Contractor shall provide all clean-up for its operations and control of all construction debris. All work areas shall be maintained in a neat and workmanlike manner. All construction debris shall be removed from the work areas and disposed of at an approved waste disposal site. The Using Agency's trash container for the building shall not be used for disposal of any construction debris.

All work shall be according to current applicable State and National codes. All work shall be in strict compliance with the national and state building mechanical, plumbing, fire and electrical codes including SMACNA, and ASHRAE standards.

Safety shall be of main concern and enforced by the contractor on site and will be periodically inspected by the State's qualified safety personnel. The Contractor shall comply with all local, state and federal laws governing safety, health and sanitation. The on-site Superintendent shall have a minimum OSHA 10 and preferably OSHA 30 card with them at all times when on the jobsite. The Using Agency shall not in any way be responsible for any fines set forth for such violations of codes, OSHA standards or any other governing agency having jurisdiction at the work site. The Contractor shall provide all needed safe guards, safety devices and protective equipment; take any actions necessary to protect the life and health of employees on the job; the safety of the public; and to protect the property of the Using Agency in connection with the performance of the work covered by this Price Agreement. Any work involving disconnect or switching of electrical service to a work area shall utilize LOCKOUT/TAGOUT identification practices.

All personnel working on the project and providing these services shall be experienced and certified in all areas related to this work and required by this Price Agreement. Journeymen level personnel shall have the ability and necessary skills to diagnosis problems and to make the appropriate decisions needed to provide these services.

Contractor's price shall cover all labor costs, tools, equipment, materials, permits, overhead, profit, insurance and any other fees necessary to perform the work called for in the Using Agency's scope of work and drawings for this project. Any equipment required to have licensed operators shall be the responsibility of the contractor before any equipment is turned on at the jobsite. The prices quoted for each project represent the total compensation to be paid by the Using Agency for the goods and/or services provided including any and all labor, equipment, tools, materials, taxes, permits, licenses, or other costs necessary to complete the service or goods provided.

Taxes shall be added by the Contractor to its quote (line item on schedule of values) at the current tax rate at the project's location. As a separate item, the Using Agency shall ensure the appropriate gross receipts tax is added to the Contractor's project proposal and that it is encumbered in the Purchase Order.

The Contractor shall provide all the services needed and called for in the Using Agency's scope of work, in addition to the requirements set forth in this Price Agreement.

DocuSign Envelope ID: 9C0D0BCE-1F94-4323-9C4D-6BA4D233D2D9

Request for Quote (RFQ):
Each project under this Price Agreement will be individually described in a "Request for Quote (RFQ)". The RFQ will describe the scope of work, the duration of the project with the date of Substantial Completion and if there are liquidated damages for not meeting the date of substantial completion. The date of Substantial Completion is the date when the space can be occupied or the Work used/operated and is turned over to the User Agency. Final completion is the date when the project is totally complete, the punch list work complete and the Contractor's final pay application/invoice is approved. The terms and conditions of the Contractor's Statewide Price Agreement will apply to all Purchase Orders which result from the accepted quote in response to the RFQ. The Contractor's written quote will be valid for thirty (30) days, unless otherwise stipulated on the quote.

There will be NO markups allowed. A negotiated fixed fee may be added as a cost for compensation to cover the cost of overhead, profit and any other general expenses as it pertains to the project.

All subcontractor quotes shall be broken down by labor and materials costs and the Contractor shall be allowed a maximum of five percent markup for administrative costs.

The Contractor and its employees agree to cooperate with and to abide by the rules and requirements of the requesting Using Agency to not interfere with the daily operations of the Agency or to jeopardize the health, safety or welfare of the employees or general public conducting business with the Using Agency.

The Using Agency reserves the right to purchase materials directly from existing Statewide Price Agreements and other sources, and to provide these materials to the Contractor. To that end, the Contractor shall provide an itemized, quantifiable list of materials required for the project.

If the Contractor is requesting reimbursement for materials used on the work, copies of the invoices for the materials may be included when submitting invoices/pay applications. The Contractor may NOT add markups for the materials purchased. Contractor shall submit billings, based on actual Contractor costs for materials, less any applicable percentage for discounts. Contractor shall provide verification that materials purchased were used for the project if requested. Any unused, billed for materials shall be turned over to the Using Agency for which the work was provided.

The Using Agency reserves the right to procure specialty services directly from its other Statewide Price Agreements and other sources to the awarded Contractor. Specialty services provided from other Statewide Price Agreements and other sources shall be coordinated by the Contractor.

The Using Agency reserves the right to obtain quotes from multiple vendors covered under this Statewide Price Agreement and award a project to a Contractor based on the quotes.

When a service is needed, the Using Agency shall provide, at a minimum, a detailed scope of work and/or drawings defining work required.

If any equipment or building system cannot be economically repaired or has reached the end of its life cycle, the Contractor shall justify with costs and other information the need for replacement. If replacement is recommended, the Contractor will provide written justification for system and/or the model, size and type of unit recommended along with any applicable efficiency data. The Using Agency's and energy standards will be discussed and taken into consideration when proposing replacement units or systems.

The State of New Mexico requires that all materials shall be new and of the highest quality and at the best attainable price available for the type of work being performed.

No used materials shall be used on the project. Recycled materials specifically prepared for reuse to meet "LEED" certification may be permitted, with the User Agency's approval.

DocuSign Envelope ID: 9C0D0BCE-1F94-4323-9C4D-6BA4D233D2D9

The Contractor shall visit the site and compare the Using Agency's scope of work and/or drawings to the existing conditions and provide all services called for in addition to the requirements set forth in this Price Agreement.

The Contractor will be required to provide a written quote, to include the work to be performed and the amount of time required for the completion of the project and submit to the Using Agency at no cost to the Using Agency. The quote shall separate the cost of itemized materials (with any applicable discounts), labor, per diem and mileage, bonds, permits, insurance, subcontractor quote(s), itemized equipment costs, any design fees needed for stamped drawings, gross receipts tax, itemized direct site overhead costs such as portable toilets, dumpsters, temporary fencing, scaffolding, signage, traffic management, work area barriers and protective equipment, materials testing, job trailers, storage pods, etc. Job workers/project manager/superintendent's cost for vehicles or phones or gas is **not** permitted.

The Contractor's quote for mileage and per diem must be priced as follows:
"Per Diem Rate" means lodging, meals, and incidentals (excluding taxes). Reference the GSA rates in Section Lodging by month and Section Meals & Incidentals Breakdown link: https://www.gsa.gov/travel/plan-book/per-diem-rates
"Mileage Rate" for any mileage quoted for contracted work as defined below: "Mileage Rate" means "Only the mileage from the dispatch to the job site for each mile traveled by vehicle as referenced in IRS standard mileage rates using link https://www.irs.gov/taxprofessionals/standard-mileage-rates in excess of 50 miles one way". The mileage shall be calculated with https://tripmaker.randmcnally.com

Prior to commencement of any work performed the Using Agency will issue a notice to proceed for the work upon receipt of a purchase order, based on the prices set forth by Contractor's quote. The work on any project to be performed under this Contract shall commence no later than ten (10) consecutive calendar days after the date of written "Notice to Proceed." On smaller projects, an email will suffice.

The Contractor shall begin the work based on the priority identified by the Using Agency. Any delay beyond the stated completion date shall be upon agreement by the Using Agency and the Contractor.

Where work is to be conducted in a state or local correctional or secured facility, security clearances and background checks that may be required by the facility for the Contractor and its employees must be obtained prior to commencement of any work at that facility. The Using Agency reserves the right to deny any employee of the Contractor, access to the facility should the employee be in violation of any criteria required for the security clearance.

The User Agency reserves the right to provide an escort and/or full time supervision of the Contractor and its employees during any or all phases of a project, should the Using Agency feel it is in its best interest to provide these extraordinary security services.

The Using Agency reserves the right to escort any or all employees of the Contractor off its property, for any inappropriate conduct or actions that jeopardize the safety, security or wellbeing of the facility or any individual. Inappropriate behavior by the Contractor, its employees or subcontractors may be grounds for immediate removal from this Price Agreement. Any employee of the Contractor found in violation of any law, while on the User Agency's property, may be prosecuted.

Change Orders:
Any change orders to the project scope will require an additional RFQ requesting the backup materials and labor costs and shall be substantiated without a doubt there was no way of knowing the additional services were needed when the original quote was provided. The pricing shall conform to the SPA. Change orders shall be managed closely by the Using Agency. Change order abuse shall be reported to the Procurement Specialist listed on the cover page of this Price Agreement. Preventative measure shall be taken by both the contractor and the Using Agency prior to issuing the Notice to Proceed. Such measures may include: soil tests (soil boring); clarification of ambiguity in the project plan, the scope of work, the RFQ, the drawings, etc.; the project scope should be completely defined and agreed upon before any work begins.

DocuSign Envelope ID: 9C0D0BCE-1F94-4323-9C4D-6BA4D233D2D9

Using Agency's obligations:

- Shall provide, at a minimum, a detailed scope of work and/or drawings defining work required.
- Allow the Contractor limited use of on-site utilities for projects at an existing building.
- Shall provide periodic and/or random inspections of its projects. Using Agencies shall be responsible for providing its inspections, photography of the project's progress, and preparation of field observation reports.
- Conduct weekly on-site meetings with the Contractor, or on an as-needed basis, to ensure compliance with the scope of work for the project; provide assistance and guidance; to resolve problems arising during the project; and to ensure quality of work and materials being incorporated into the project.
- Process requests for payment within twenty-one (21) days of time/date stamped receipt of proper invoice and/or G702 & G703 Schedule of Values, Application and Certificate for Payment, when more than a single invoice applies to the contracted amount.
- If applicable, procure independent special inspections, commissioning, structural, soils testing with geotechnical reports and/or topographical survey.

Other Construction Related Terms and Conditions:

Time Considerations:
The work on any project to be performed under this Agreement shall commence no later than ten (10) consecutive calendar days after the date of written "Notice to Proceed." On smaller projects, an email will suffice. The date of Substantial Completion shall be described in the RFQ or related construction contract. The date can be extended by the Using Agency by valid written Change Order.

Should the Contractor neglect, refuse, or otherwise fail to complete the Work on the project within the time specified in the RFQ or related construction contract, the Contractor agrees, in partial consideration for the award of the Purchase Order, to pay to the Using Agency the amount of dollars named in the RFQ or construction contract per consecutive calendar day, not as a penalty, but as liquidated damages for such breach of the Purchase Order or related construction contract under this Price Agreement.

Mediation:
Any controversy or claim arising between the parties shall be settled by mediation if the parties cannot reach a mutually agreeable solution. The parties shall endeavor to resolve their disagreement by mediation which, unless the parties mutually agree otherwise, shall be in accordance with the procedures of the New Mexico Public Works Mediation Act (NMSA §13-4C-1 et seq.) except that before any party may select a mediator it must confer in good faith with the other party concerning the selection of a mutually acceptable mediator. Mediation shall proceed in advance of legal or equitable proceedings, which shall be stayed pending mediation for a period of **sixty (60) days** from the date of notice of mediation session, unless stayed for a longer period by agreement of the parties or court order.

Inspection of Work:
If a Purchase Order is issued for the purchase of services, the following terms shall apply when applicable:

A. Services include services performed, workmanship, and material furnished or utilized in the performance of services.
B. The Contractor shall provide and maintain an inspection system acceptable to the Using Agency covering the services under the Purchase Order. Complete records of all inspection work performed by the Contractor shall be maintained and made available to the Using Agency or other party to the Purchase Order during the term of performance of the Work and for as long thereafter as required.
C. The Using Agency has the right to inspect and test all services contemplated to the extent practicable at all times and places during the term of the Project. The Using Agency shall perform inspections and tests in a manner that will not unduly delay or interfere with Contractor's performance.
D. If the Using Agency performs inspections or tests on the premises of the Contractor or a subcontractor, the Contractor shall furnish, and shall require subcontractors to furnish, at no increase in Purchase Order price, all reasonable facilities and assistance for the safe and convenient performance of such inspections or tests.

DocuSign Envelope ID: 9C0D0BCE-1F94-4323-9C4D-6BA4D233D2D9

E. If any part of the services do not conform with the requirements, the Using Agency may require the Contractor to re-perform the services in conformity with the requirements at no increase in Purchase Order amount. When the defects in services cannot be corrected by re-performance, the Using Agency may:
   (1) Require the Contractor to take necessary action(s) to ensure that future performance conforms to the requirements;
   (2) Reduce the Purchase Order price to reflect the reduced value of the services performed.

F. If the Contractor fails to promptly re-perform the services or to take the necessary action(s) to ensure future performance in conformity with the requirements, the Using Agency may:
   (1) By Agreement or otherwise, perform the services and charge to the Contractor any cost incurred by the Using Agency that is directly related to the performance of such service; or
   (2) Cancel the Purchase Order for default.

THE PROVISIONS OF THIS ARTICLE ARE NOT EXCLUSIVE AND DO NOT WAIVE THE USING AGENCY'S OTHER LEGAL RIGHTS AND REMEDIES CAUSED BY THE CONTRACTOR'S DEFAULT/BREACH OF THE PURCHASE ORDER/PRICE AGREEMENT.

Suspension, Delay or Interruption of Work:
The Using Agency may, without cause, order the Contractor, in writing, to suspend, delay or interrupt the Work in whole or in part for such period of time as the Using Agency may determine.. Upon receipt of such notice, Contractor shall leave the jobsite and any equipment in a safe condition prior to departing. Contractor must assert rights to additional compensation within thirty (30) days after suspension of work is lifted and return to work is authorized.

Time Extension Costs:
Agreed Compensation for Overhead "General Conditions" for Changes to Time for Completion or Contract Completion Date for Changes to the Work**:** If the change in the Work also changes the Time for Completion or the Agreement Completion Date by adding days to complete the Work, an itemized accounting of the following General Conditions costs for direct Site overhead set forth in the subparagraph below may be considered as allowable costs for compensation. Home office overhead and other indirect overhead expenses are not added into the General Conditions expenses.

Direct Site Overhead Expenses:
The Contractor's per diem expenses, as shown by the itemized accounting, for the following allowable, applicable, direct Site overhead expenses: The Site superintendent's pro-rata salary, temporary Site office trailer, temporary fencing, building utility costs, security, temporary storage and temporary Site utilities including electricity, heat, water, and sanitary/toilet facilities, etc. for each day added.

If at any time there is a delay in the critical path of the Work due to postponement, due to the Contractor's efforts to justify an extension of the time or an increase in the Agreement Price beyond the deadlines or due to the Contractor's refusal to proceed with any of the approved Work, such delay and any Contractor costs resulting from it shall not serve as the basis for the extension of the Time for Completion or Agreement Completion Date or for an increase in the Contract Price.

Clean Up and Storage:

A. The Contractor will provide off-site legal disposal of all waste products, trash, and debris. Using Agency's trash receptacles will not be used by the Contractor. Sanitary facilities will "not" be available at the job site. Contractor shall be responsible for the provision and maintenance of portable toilets.
B. The Contractor on a daily basis shall keep the premises and surrounding area free from accumulation of waste materials or rubbish caused by operations under the Agreement. At completion of the Work, the Contractor shall remove from and about the Project waste materials, rubbish, the Contractor's tools, construction equipment, machinery and surplus materials and shall then thoroughly clean the premises and the site to the Using Agency's satisfaction.
C. Materials or equipment shall be delivered to the project in the manufacturer's original sealed, labeled containers and shall be adequately protected against moisture, dust, tampering or damage from improper handling or storage. Materials shall not be delivered to the site before they are needed.

DocuSign Envelope ID: 9C0D0BCE-1F94-4323-9C4D-6BA4D233D2D9

D. Storage of materials and construction equipment shall be coordinated with the Using Agency.

Permits and Fees:

A. IF APPLICABLE- The Contractor shall secure and pay for the Building Permit and other permits and governmental fees, licenses and inspections and Certificate of Occupancy necessary for proper execution and completion of the Work. Changes or modifications to the Work shall include all requirements of this paragraph.

B. The Contractor shall comply with and give notices required by laws, ordinances, rules, regulations and lawful orders of public authorities applicable to performance of the Work.

C. IF APPLICABLE- Certificates of Inspection, use and occupancy will be delivered to the Using Agency upon completion of the Work in sufficient time for occupation of the facility in accordance with the approved schedule for the Work. Contractor shall deliver a photocopy of the Building Permit to the Design Professional and Using Agency as soon as it is obtained.

Schedule, Progress Meetings and Reports:

A. The Contractor, promptly after being awarded a Project and before the first payment application, shall prepare and submit for the Using Agency's information a Critical Path Construction Schedule for the Work that indicates the intended start and completion of the various construction activities, which shall be implemented and adhered to by the Contractor, Subcontractors, material suppliers and equipment suppliers. At a minimum, the schedule shall be a GANTT type schedule and shall not exceed time limits allowed by the RFQ or Notice to Proceed with no fewer work breakdown events than line items of the Schedule of Values.

B. The Contractor shall perform the Work in general accordance with the most recent schedule submitted to the Using Agency.

C. Progress meetings shall be scheduled on a regular basis. The purpose will be to review the upcoming activities, any open issues and current progress. The Contractor shall keep any meeting minutes as needed. Progress schedules shall be updated regularly. A three week look-ahead schedule should be presented at every project meeting. An updated critical path schedule shall be presented with any change orders and with every pay application.

D. The Contractor shall prepare a Daily Report each day that Contractor, Subcontractors or any other entity are on the Project. The Daily Reports shall be maintained at the site and be well organized. The Using Agency may request copies at any time. The reports may include:
   1. Report date and who prepared the report;
   2. Weather conditions - low temp, high temp, visibility, humidity, wind, wind direction, cloud conditions, precipitation amount, other notes;
   3. Companies present by name and their number of workers, work location, total man hours that day for each company;
   4. Equipment - type, source, units of work done, location of work, hour meter reading;
   5. Material brought to site - description, units, quantity, quality, location, time;
   6. Visitors to site - name, company, time;
   7. Safety concerns - company, contact, noticed by, work activity, safety issue, requirement, outcome;
   8. Quality assurance and control - company, description of issue, specification section, issued by.

Close-out Requirements:

The Contractor shall submit to the Using Agency a separate and detailed Closeout Schedule indicating the date of Final Completion and all work to be completed before Final Completion including Close-Out requirements. The punch list of incomplete or inadequate work shall also be submitted when the work is substantially complete. Failure to include any item on the punch list does not alter the responsibility of the Contractor to complete all work in accordance with the Contract Documents.

DocuSign Envelope ID: 9C0D0BCE-1F94-4323-9C4D-6BA4D233D2D9

Before final completion can be achieved, all Work must be complete and accepted including the following as applicable:

a. Work associated with Punch List(s);
b. Testing, balance or performance operations complete and in agreement that associated work is in compliance with the Contract Documents;
c. One hard copy and one electronic copy in .pdf format of final approved test, balance or performance report(s) complete with directory of contents submitted to Using Agency;
d. As-Built drawings delivered in autocad or electronic format;
e. Written certification signed by Using Agency of delivery and stocking of extra material, equipment or components required by the Purchase Order at a location established by the Using Agency;
f. Delivery of all warranties required by the Work;
g. All keys, passes, codes, software or other methods or components of control or security which have been correctly and adequately accounted for and closed-out;
h. Completed Operations Liability insurance policy certificate, if applicable;
i. Training of staff on all applicable building systems;
j. All Storm Water Pollution Prevention Permits (SWPPP) have been updated or closed;
k. Utility transfer to User/Using Agency;
l. Operations and Maintenance Manuals;
m. Certified statement of Release of Liens (AIA Document G706A or approved form) and Consent of Surety.

Warranty:
The Contractor shall warrant its work (non-roofing and equipment), for materials and for workmanship furnished and performed under this Price Agreement for a period of one (1) year minimum from the date of acceptance or Substantial Completion whichever is longest. The Contractor shall warrant its work for repairs or restoration of existing systems, appliances and work for ninety (90) days from the date of acceptance or Substantial Completion. It is understood that some equipment is far beyond its normal life and a warranty cannot be extended/supplied. Contractor must pass on to the User Agency warranties of replaced roofs and equipment offered by the manufacturer.

Payment Provisions:
Generally payments are made on a thirty (30) day billing cycle. Payment for projects of less than thirty (30) day duration shall be paid upon the Using Agency's acceptance of the work.

All payments under this Agreement are subject to the following provisions:

A. Acceptance - In accordance with Section 13-1-158 NMSA 1978, the Agency shall determine if the Construction Work provided meets specifications. No payment shall be made for any work until the Work has been accepted in writing by the Using Agency. Unless otherwise agreed upon between the Using Agency and the Contractor, within fifteen (15) days from the date the Using Agency receives written notice from the Contractor that payment is requested for work, the Using Agency shall issue a written certification of complete or partial acceptance or rejection of the Work. Unless the Using Agency gives notice of rejection within the specified time period, the Work will be deemed to have been accepted.

B. Payment of Invoice - Upon acceptance that the Work has been received and accepted, payment shall be tendered to the Contractor within twenty one (21) days after the date of acceptance of an undisputed invoice.

C. The Contractor, before final payment of the amount due under this Contract, shall provide requested Close-out documents including any release of liens.

DocuSign Envelope ID: 9C0D0BCE-1F94-4323-9C4D-6BA4D233D2D9

BID INFORMATION:
"Tax" The bid prices for this ITB shall **not** include New Mexico gross receipts tax or local option tax(es).

"Hourly Rate" means the proposed fully loaded maximum hourly rates that include fringe benefits and any overhead costs for contractor personnel, as well as subcontractor personnel, if appropriate. The Hourly Rate does not include mileage, per diem or lodging.

"Offeror" shall reference all work positions associated with this project, and each position's firm, fixed hourly rate. This hourly rate does not include billable reimbursable rates for mileage, meals or lodging. The State of New Mexico, at its discretion, may negotiate lower rates on a project by project basis, with the awarded Contractor.

Hourly rates are requested for the three (3) levels of personnel. ***All items for pricing must be filled in.*** If one of the personnel listed is not relevant to your company, fill in a rate for a comparable employee that is on staff or could be on staff at a future time. For example, if the Superintendent also functions as the Journeyman or Experienced worker or vice versa, enter his rate for both items. Any blank items will cause a possible rejection of the bid for non-compliance.

Labor Rates:
1. Superintendent: a person with supervisory experience who maintains control of the work and work site. This person may or may not actually perform work on the project.

2. Journeyman or Experienced Worker: a person licensed by the State of New Mexico as a journeyman in the specialized field of work required and being performed or a person with many years of experience with a high rate of pay.

3. Laborer: a person with minimal experience, performing minor forms of labor.

Hours Worked:

Regular Hours: Monday through Friday and 8 am through 5 pm.

After Hours: All hours not within the days and times listed for "Regular Hours".

Holidays: Holidays will be considered "After Hours" and paid at "After Hours" rates.

The State of New Mexico reserves the right to award this Price Agreement to multiple vendors. Bidders must include pricing for ALL items in order to allow for accurate comparisons. If a Bidder fails to include one or more of those items, his Bid may be rejected.

Bids for these services are requested on a statewide basis. The intent in the bid evaluation is to add up all of the items from Items 1 through 16 in order to determine the low bidders.

*****End of Specifications*****

DocuSign Envelope ID: 9C0D0BCE-1F94-4323-9C4D-6BA4D233D2D9

Items:

Item	Approx. Qty.	UOM	Article and Description	Unit Price	Awarded Vendor
1	**1**	**Hourly**	**Labor Rate - Projects under Sixty Thousand ($60,000) Superintendent, regular hours**		
				$75.00	(AA)
				$75.00	(AB)
				$85.00	(AC)
				$95.00	(AD)
				$73.70	(AE)
				$105.00	(AF)
				$65.00	(AG)
				$82.30	(AH)
				$85.00	(AI)
				$95.00	(AJ)
				$76.00	(AK)
				$68.00	(AL)
				$72.50	(AM)
				$180.00	(AN)
				$108.11	(AO)
				$175.00	(AP)
				$51.72	(AQ)
				$100.00	(AR)
				$150.00	(AS)
				$150.00	(AT)
				$36.25	(AU)
				$100.00	(AV)
				$80.00	(AW)
				$195.00	(AX)
				$155.00	(AY)
				$100.00	(AZ)
				$85.00	(BA)
				$87.85	(BB)
				$75.00	(BC)
				$150.00	(BD)
				$80.40	(BE)
				$92.00	(BF)
				$72.50	(BG)
				$85.00	(BH)
				$65.00	(BI)
				$65.00	(BJ)
				$75.00	(BK)
				$70.33	(BL)
				$103.07	(BM)
				$80.00	(BN)
				$165.00	(BO)

DocuSign Envelope ID: 9C0D0BCE-1F94-4323-9C4D-6BA4D233D2D9

Item	Approx. Qty.	UOM	Article and Description	Unit Price	Awarded Vendor
			Item 1 - Continued		
				$99.78	(BP)
				$98.00	(BQ)
				$90.00	(BR)
				$70.00	(BS)
				$100.00	(BT)
				$93.00	(BU)
				$80.00	(BV)
				$85.00	(BW)
				$132.47	(BX)
				$90.00	(BY)
2	**1**	**Hourly**	**Labor Rate - Projects under Sixty Thousand ($60,000) Superintendent, after hours**		
				$112.50	(AA)
				$85.00	(AB)
				$85.00	(AC)
				$110.00	(AD)
				$73.70	(AE)
				$120.00	(AF)
				$75.00	(AG)
				$118.37	(AH)
				$85.00	(AI)
				$142.50	(AJ)
				$76.00	(AK)
				$102.00	(AL)
				$88.00	(AM)
				$200.00	(AN)
				$162.17	(AO)
				$250.00	(AP)
				$77.58	(AQ)
				$150.00	(AR)
				$225.00	(AS)
				$205.00	(AT)
				$61.62	(AU)
				$150.00	(AV)
				$100.00	(AW)
				$195.00	(AX)
				$185.00	(AY)
				$125.00	(AZ)
				$115.00	(BA)
				$131.77	(BB)
				$95.00	(BC)
				$225.00	(BD)
				$120.61	(BE)
				$145.00	(BF)

DocuSign Envelope ID: 9C0D0BCE-1F94-4323-9C4D-6BA4D233D2D9

Item	Approx. Qty.	UOM	Article and Description	Unit Price	Awarded Vendor
			Item 2 - Continued		
				$83.37	(BG)
				$95.00	(BH)
				$85.00	(BI)
				$75.00	(BJ)
				$85.00	(BK)
				$77.86	(BL)
				$173.14	(BM)
				$100.00	(BN)
				$225.00	(BO)
				$149.67	(BP)
				$126.00	(BQ)
				$90.00	(BR)
				$95.00	(BS)
				$120.00	(BT)
				$103.00	(BU)
				$120.00	(BV)
				$127.50	(BW)
				$165.42	(BX)
				$155.00	(BY)
3	**1**	**Hourly**	**Labor Rate - Projects under Sixty Thousand ($60,000) Journeyman or Experienced worker, regular hours**		
				$60.00	(AA)
				$70.00	(AB)
				$85.00	(AC)
				$105.00	(AD)
				$60.50	(AE)
				$90.00	(AF)
				$49.00	(AG)
				$78.41	(AH)
				$70.00	(AI)
				$95.00	(AJ)
				$54.00	(AK)
				$64.00	(AL)
				$58.50	(AM)
				$140.00	(AN)
				$108.11	(AO)
				$150.00	(AP)
				$48.53	(AQ)
				$125.00	(AR)
				$150.00	(AS)
				$125.00	(AT)
				$73.84	(AU)
				$75.00	(AV)

DocuSign Envelope ID: 9C0D0BCE-1F94-4323-9C4D-6BA4D233D2D9

Item	Approx. Qty.	UOM	Article and Description	Unit Price	Awarded Vendor
			Item 3 - Continued		
				$65.00	(AW)
				$165.00	(AX)
				$135.00	(AY)
				$85.00	(AZ)
				$67.00	(BA)
				$69.66	(BB)
				$70.00	(BC)
				$150.00	(BD)
				$112.83	(BE)
				$120.00	(BF)
				$67.50	(BG)
				$80.00	(BH)
				$100.00	(BI)
				$49.00	(BJ)
				$55.00	(BK)
				$62.54	(BL)
				$134.44	(BM)
				$70.00	(BN)
				$145.00	(BO)
				$85.88	(BP)
				$88.00	(BQ)
				$75.00	(BR)
				$70.00	(BS)
				$60.00	(BT)
				$70.00	(BU)
				$75.00	(BV)
				$80.00	(BW)
				$125.27	(BX)
				$120.00	(BY)
4	**1**	**Hourly**	**Labor Rate - Projects under Sixty Thousand ($60,000) Journeyman or Experienced worker, after hours**		
				$90.00	(AA)
				$75.00	(AB)
				$85.00	(AC)
				$125.00	(AD)
				$70.40	(AE)
				$110.00	(AF)
				$56.00	(AG)
				$111.07	(AH)
				$105.00	(AI)
				$142.50	(AJ)
				$65.00	(AK)
				$96.00	(AL)

DocuSign Envelope ID: 9C0D0BCE-1F94-4323-9C4D-6BA4D233D2D9

Item	Approx. Qty.	UOM	Article and Description	Unit Price	Awarded Vendor
			Item 4 - Continued		
				$74.00	(AM)
				$155.00	(AN)
				$162.17	(AO)
				$200.00	(AP)
				$72.80	(AQ)
				$135.00	(AR)
				$225.00	(AS)
				$150.00	(AT)
				$95.36	(AU)
				$112.50	(AV)
				$90.00	(AW)
				$165.00	(AX)
				$155.00	(AY)
				$110.00	(AZ)
				$85.00	(BA)
				$104.49	(BB)
				$90.00	(BC)
				$225.00	(BD)
				$169.24	(BE)
				$155.00	(BF)
				$77.63	(BG)
				$95.00	(BH)
				$110.00	(BI)
				$56.00	(BJ)
				$85.00	(BK)
				$72.55	(BL)
				$176.48	(BM)
				$90.00	(BN)
				$205.00	(BO)
				$128.82	(BP)
				$106.00	(BQ)
				$112.50	(BR)
				$95.00	(BS)
				$85.00	(BT)
				$90.00	(BU)
				$113.00	(BV)
				$120.00	(BW)
				$158.22	(BX)
				$150.00	(BY)
5	**1**	**Hourly**	**Labor Rate - Projects under Sixty Thousand ($60,000) Laborer, regular hours**		
				$35.00	(AA)
				$65.00	(AB)
				$85.00	(AC)

DocuSign Envelope ID: 9C0D0BCE-1F94-4323-9C4D-6BA4D233D2D9

Item	Approx. Qty.	UOM	Article and Description	Unit Price	Awarded Vendor
			Item 5 - Continued		
				$55.00	(AD)
				$49.50	(AE)
				$75.00	(AF)
				$28.00	(AG)
				$50.21	(AH)
				$45.00	(AI)
				$55.00	(AJ)
				$44.00	(AK)
				$62.00	(AL)
				$40.00	(AM)
				$100.00	(AN)
				$83.23	(AO)
				$100.00	(AP)
				$33.81	(AQ)
				$80.00	(AR)
				$75.00	(AS)
				$100.00	(AT)
				$21.50	(AU)
				$50.00	(AV)
				$55.00	(AW)
				$135.00	(AX)
				$120.00	(AY)
				$55.00	(AZ)
				$60.00	(BA)
				$41.43	(BB)
				$55.00	(BC)
				$75.00	(BD)
				$59.74	(BE)
				$26.50	(BF)
				$41.50	(BG)
				$65.00	(BH)
				$45.00	(BI)
				$28.00	(BJ)
				$35.00	(BK)
				$54.80	(BL)
				$30.03	(BM)
				$60.00	(BN)
				$105.00	(BO)
				$44.42	(BP)
				$74.00	(BQ)
				$45.00	(BR)
				$60.00	(BS)
				$45.00	(BT)

DocuSign Envelope ID: 9C0D0BCE-1F94-4323-9C4D-6BA4D233D2D9

Item	Approx. Qty.	UOM	Article and Description	Unit Price	Awarded Vendor
			Item 5 - Continued		
				$50.00	(BU)
				$55.00	(BV)
				$40.00	(BW)
				$87.58	(BX)
				$25.00	(BY)
6	**1**	**Hourly**	**Labor Rate - Projects under Sixty Thousand ($60,000) Laborer, after hours**		
				$52.50	(AA)
				$70.00	(AB)
				$85.00	(AC)
				$65.00	(AD)
				$58.30	(AE)
				$95.00	(AF)
				$35.00	(AG)
				$70.22	(AH)
				$67.50	(AI)
				$82.50	(AJ)
				$54.00	(AK)
				$93.00	(AL)
				$54.00	(AM)
				$110.00	(AN)
				$124.85	(AO)
				$150.00	(AP)
				$50.72	(AQ)
				$110.00	(AR)
				$112.50	(AS)
				$125.00	(AT)
				$36.12	(AU)
				$75.00	(AV)
				$75.00	(AW)
				$135.00	(AX)
				$145.00	(AY)
				$75.00	(AZ)
				$72.00	(BA)
				$62.89	(BB)
				$75.00	(BC)
				$82.50	(BD)
				$89.60	(BE)
				$52.00	(BF)
				$51.73	(BG)
				$80.00	(BH)
				$45.00	(BI)
				$35.00	(BJ)
				$50.00	(BK)

DocuSign Envelope ID: 9C0D0BCE-1F94-4323-9C4D-6BA4D233D2D9

Item	Approx. Qty.	UOM	Article and Description	Unit Price	Awarded Vendor
			Item 6 - Continued		
				$74.30	(BL)
				$60.06	(BM)
				$80.00	(BN)
				$125.00	(BO)
				$66.63	(BP)
				$89.00	(BQ)
				$67.50	(BR)
				$85.00	(BS)
				$60.00	(BT)
				$65.00	(BU)
				$83.00	(BV)
				$60.00	(BW)
				$114.89	(BX)
				$50.00	(BY)
7	**1**	**Hourly**	**Labor Rate - Projects over Sixty Thousand ($60,000) Wage Decision Projects, Superintendent, regular hours**		
				$75.00	(AA)
				$80.00	(AB)
				$85.00	(AC)
				$110.00	(AD)
				$73.70	(AE)
				$105.00	(AF)
				$65.00	(AG)
				$82.30	(AH)
				$85.00	(AI)
				$95.00	(AJ)
				$76.00	(AK)
				$68.00	(AL)
				$75.00	(AM)
				$180.00	(AN)
				$108.11	(AO)
				$200.00	(AP)
				$51.72	(AQ)
				$135.00	(AR)
				$150.00	(AS)
				$150.00	(AT)
				$36.25	(AU)
				$115.00	(AV)
				$80.00	(AW)
				$130.00	(AX)
				$155.00	(AY)
				$105.00	(AZ)
				$100.00	(BA)

DocuSign Envelope ID: 9C0D0BCE-1F94-4323-9C4D-6BA4D233D2D9

Item	Approx. Qty.	UOM	Article and Description	Unit Price	Awarded Vendor
			Item 7 - Continued		
				$87.85	(BB)
				$75.00	(BC)
				$150.00	(BD)
				$80.40	(BE)
				$99.00	(BF)
				$83.37	(BG)
				$85.00	(BH)
				$75.00	(BI)
				$65.00	(BJ)
				$75.00	(BK)
				$92.36	(BL)
				$114.07	(BM)
				$90.00	(BN)
				$165.00	(BO)
				$99.78	(BP)
				$126.00	(BQ)
				$90.00	(BR)
				$70.00	(BS)
				$100.00	(BT)
				$93.00	(BU)
				$98.00	(BV)
				$105.00	(BW)
				$162.10	(BX)
				$101.00	(BY)
8	**1**	**Hourly**	**Labor Rate - Projects over Sixty Thousand ($60,000) Wage Decision Projects, Superintendent, after hours**		
				$112.50	(AA)
				$90.00	(AB)
				$85.00	(AC)
				$120.00	(AD)
				$73.70	(AE)
				$120.00	(AF)
				$75.00	(AG)
				$118.37	(AH)
				$85.00	(AI)
				$142.50	(AJ)
				$76.00	(AK)
				$102.00	(AL)
				$88.00	(AM)
				$200.00	(AN)
				$162.17	(AO)
				$275.00	(AP)
				$77.58	(AQ)

DocuSign Envelope ID: 9C0D0BCE-1F94-4323-9C4D-6BA4D233D2D9

Item	Approx. Qty.	UOM	Article and Description	Unit Price	Awarded Vendor
			Item 8 - Continued		
				$150.00	(AR)
				$225.00	(AS)
				$205.00	(AT)
				$61.60	(AU)
				$172.50	(AV)
				$100.00	(AW)
				$130.00	(AX)
				$185.00	(AY)
				$130.00	(AZ)
				$130.00	(BA)
				$128.71	(BB)
				$95.00	(BC)
				$225.00	(BD)
				$120.61	(BE)
				$140.00	(BF)
				$95.88	(BG)
				$100.00	(BH)
				$95.00	(BI)
				$75.00	(BJ)
				$95.00	(BK)
				$138.54	(BL)
				$176.44	(BM)
				$110.00	(BN)
				$225.00	(BO)
				$149.67	(BP)
				$153.00	(BQ)
				$90.00	(BR)
				$95.00	(BS)
				$120.00	(BT)
				$103.00	(BU)
				$147.00	(BV)
				$150.00	(BW)
				$206.87	(BX)
				$155.00	(BY)
9	**1**	**Hourly**	**Labor Rate - Projects over Sixty Thousand ($60,000) Wage Decision Projects, Journeyman, regular hours**		
				$60.00	(AA)
				$75.00	(AB)
				$85.00	(AC)
				$120.00	(AD)
				$70.50	(AE)
				$90.00	(AF)
				$49.00	(AG)

DocuSign Envelope ID: 9C0D0BCE-1F94-4323-9C4D-6BA4D233D2D9

Item	Approx. Qty.	UOM	Article and Description	Unit Price	Awarded Vendor
			Item 9 - Continued		
				$78.41	(AH)
				$70.00	(AI)
				$95.00	(AJ)
				$88.00	(AK)
				$64.00	(AL)
				$68.00	(AM)
				$140.00	(AN)
				$108.11	(AO)
				$175.00	(AP)
				$48.53	(AQ)
				$125.00	(AR)
				$150.00	(AS)
				$125.00	(AT)
				$78.36	(AU)
				$90.00	(AV)
				$75.00	(AW)
				$110.00	(AX)
				$135.00	(AY)
				$90.00	(AZ)
				$82.00	(BA)
				$68.04	(BB)
				$70.00	(BC)
				$150.00	(BD)
				$157.77	(BE)
				$152.00	(BF)
				$77.63	(BG)
				$85.00	(BH)
				$125.00	(BI)
				$49.00	(BJ)
				$55.00	(BK)
				$75.42	(BL)
				$169.74	(BM)
				$80.00	(BN)
				$145.00	(BO)
				$85.88	(BP)
				$106.00	(BQ)
				$75.00	(BR)
				$70.00	(BS)
				$60.00	(BT)
				$70.00	(BU)
				$90.00	(BV)
				$90.00	(BW)
				$153.70	(BX)

DocuSign Envelope ID: 9C0D0BCE-1F94-4323-9C4D-6BA4D233D2D9

Item	Approx. Qty.	UOM	Article and Description	Unit Price	Awarded Vendor
			Item 9 - Continued		
				$150.00	(BY)
10	**1**	**Hourly**	**Labor Rate - Projects over Sixty Thousand ($60,000) Wage Decision Projects, Journeyman, after hours**		
				$90.00	(AA)
				$80.00	(AB)
				$85.00	(AC)
				$130.00	(AD)
				$78.50	(AE)
				$110.00	(AF)
				$56.00	(AG)
				$111.07	(AH)
				$105.00	(AI)
				$142.50	(AJ)
				$88.00	(AK)
				$96.00	(AL)
				$82.00	(AM)
				$155.00	(AN)
				$162.17	(AO)
				$250.00	(AP)
				$72.80	(AQ)
				$135.00	(AR)
				$225.00	(AS)
				$150.00	(AT)
				$95.60	(AU)
				$135.00	(AV)
				$95.00	(AW)
				$110.00	(AX)
				$155.00	(AY)
				$120.00	(AZ)
				$98.00	(BA)
				$102.06	(BB)
				$90.00	(BC)
				$225.00	(BD)
				$236.66	(BE)
				$202.00	(BF)
				$89.27	(BG)
				$100.00	(BH)
				$125.00	(BI)
				$56.00	(BJ)
				$85.00	(BK)
				$116.35	(BL)
				$246.20	(BM)
				$100.00	(BN)

DocuSign Envelope ID: 9C0D0BCE-1F94-4323-9C4D-6BA4D233D2D9

Item	Approx. Qty.	UOM	Article and Description	Unit Price	Awarded Vendor
			Item 10 - Continued		
				$205.00	(BO)
				$128.82	(BP)
				$127.00	(BQ)
				$112.50	(BR)
				$95.00	(BS)
				$85.00	(BT)
				$90.00	(BU)
				$135.00	(BV)
				$130.00	(BW)
				$199.66	(BX)
				$220.00	(BY)
11	**1**	**Hourly**	**Labor Rate - Projects over Sixty Thousand ($60,000) Wage Decision Projects, Laborer, regular hours**		
				$35.00	(AA)
				$70.00	(AB)
				$85.00	(AC)
				$65.00	(AD)
				$57.00	(AE)
				$75.00	(AF)
				$28.00	(AG)
				$50.21	(AH)
				$45.00	(AI)
				$55.00	(AJ)
				$60.00	(AK)
				$62.00	(AL)
				$47.00	(AM)
				$100.00	(AN)
				$83.23	(AO)
				$125.00	(AP)
				$33.81	(AQ)
				$85.00	(AR)
				$75.00	(AS)
				$100.00	(AT)
				$37.37	(AU)
				$65.00	(AV)
				$55.00	(AW)
				$90.00	(AX)
				$120.00	(AY)
				$60.00	(AZ)
				$72.00	(BA)
				$40.95	(BB)
				$55.00	(BC)
				$75.00	(BD)

DocuSign Envelope ID: 9C0D0BCE-1F94-4323-9C4D-6BA4D233D2D9

Item	Approx. Qty.	UOM	Article and Description	Unit Price	Awarded Vendor
			Item 11 - Continued		
				$74.14	(BE)
				$50.50	(BF)
				$51.73	(BG)
				$75.00	(BH)
				$50.00	(BI)
				$28.00	(BJ)
				$35.00	(BK)
				$57.78	(BL)
				$57.94	(BM)
				$70.00	(BN)
				$105.00	(BO)
				$44.42	(BP)
				$89.00	(BQ)
				$45.00	(BR)
				$60.00	(BS)
				$45.00	(BT)
				$50.00	(BU)
				$65.00	(BV)
				$50.00	(BW)
				$114.54	(BX)
				$50.00	(BY)
12	**1**	**Hourly**	**Labor Rate - Projects over Sixty Thousand ($60,000) Wage Decision Projects, Laborer, after hours**		
				$52.50	(AA)
				$75.00	(AB)
				$85.00	(AC)
				$75.00	(AD)
				$60.00	(AE)
				$95.00	(AF)
				$35.00	(AG)
				$70.22	(AH)
				$67.50	(AI)
				$82.50	(AJ)
				$71.00	(AK)
				$93.00	(AL)
				$59.00	(AM)
				$110.00	(AN)
				$124.85	(AO)
				$175.00	(AP)
				$50.72	(AQ)
				$110.00	(AR)
				$112.50	(AS)
				$125.00	(AT)

DocuSign Envelope ID: 9C0D0BCE-1F94-4323-9C4D-6BA4D233D2D9

Item	Approx. Qty.	UOM	Article and Description	Unit Price	Awarded Vendor
			Item 12 - Continued		
				$56.06	(AU)
				$97.50	(AV)
				$68.00	(AW)
				$90.00	(AX)
				$145.00	(AY)
				$80.00	(AZ)
				$85.00	(BA)
				$61.43	(BB)
				$75.00	(BC)
				$82.50	(BD)
				$112.12	(BE)
				$104.50	(BF)
				$59.49	(BG)
				$90.00	(BH)
				$65.00	(BI)
				$35.00	(BJ)
				$50.00	(BK)
				$86.75	(BL)
				$115.87	(BM)
				$90.00	(BN)
				$125.00	(BO)
				$66.63	(BP)
				$112.00	(BQ)
				$67.50	(BR)
				$85.00	(BS)
				$60.00	(BT)
				$65.00	(BU)
				$98.00	(BV)
				$70.00	(BW)
				$150.31	(BX)
				$100.00	(BY)
13	**1**	**Hourly**	**Labor Rate - Diagnosis, project estimates, troubleshooting, or other not listed**		
				$100.00	(AA)
				$65.00	(AB)
				$250.00	(AC)
				$125.00	(AD)
				$90.00	(AE)
				$90.00	(AF)
				$125.00	(AG)
				$86.21	(AH)
				$90.00	(AI)
				$145.00	(AJ)
				$140.00	(AK)

DocuSign Envelope ID: 9C0D0BCE-1F94-4323-9C4D-6BA4D233D2D9

Item	Approx. Qty.	UOM	Article and Description	Unit Price	Awarded Vendor
			Item 13 - Continued		
				$125.00	(AL)
				$85.00	(AM)
				$100.00	(AN)
				$115.62	(AO)
				$200.00	(AP)
				$51.72	(AQ)
				$100.00	(AR)
				$250.00	(AT)
				$85.00	(AU)
				$100.00	(AV)
				$100.00	(AW)
				$150.00	(AX)
				$225.00	(AY)
				$150.00	(AZ)
				$200.00	(BA)
				$87.85	(BB)
				$75.00	(BC)
				$75.00	(BD)
				$80.40	(BE)
				$100.00	(BF)
				$85.00	(BG)
				$85.00	(BH)
				$85.00	(BI)
				$125.00	(BJ)
				$95.00	(BK)
				$98.86	(BL)
				$93.50	(BM)
				$75.00	(BN)
				$485.00	(BO)
				$120.00	(BP)
				$145.00	(BQ)
				$90.00	(BR)
				$70.00	(BS)
				$110.00	(BT)
				$100.00	(BU)
				$175.00	(BV)
				$100.00	(BW)
				$150.00	(BX)
				$115.00	(BY)
14	**1**	**% Discount**	**Discount off all parts and materials. Invoice will include copies of all purchases for parts and materials, including vendor and date purchased. Enter zero if no discount is offered.**		
				0%	(AA)

DocuSign Envelope ID: 9C0D0BCE-1F94-4323-9C4D-6BA4D233D2D9

Item	Approx. Qty.	UOM	Article and Description	Unit Price	Awarded Vendor
			Item 14 - Continued		
				0%	(AB)
				0%	(AC)
				0%	(AD)
				0%	(AE)
				0%	(AF)
				0%	(AG)
				0%	(AH)
				0%	(AI)
				2%	(AJ)
				0%	(AK)
				0%	(AL)
				0%	(AM)
				0%	(AN)
				0%	(AO)
				0%	(AP)
				0%	(AQ)
				0%	(AR)
				0%	(AS)
				0%	(AT)
				2%	(AU)
				0%	(AV)
				0%	(AW)
				0%	(AX)
				0%	(AY)
				0%	(AZ)
				0%	(BA)
				0%	(BB)
				0%	(BC)
				0%	(BE)
				0%	(BF)
				0%	(BG)
				0%	(BH)
				0%	(BI)
				0%	(BJ)
				5%	(BK)
				0%	(BL)
				0%	(BM)
				0%	(BN)
				0%	(BO)
				0%	(BP)
				0%	(BQ)
				0%	(BR)
				15%	(BS)

DocuSign Envelope ID: 9C0D0BCE-1F94-4323-9C4D-6BA4D233D2D9

Item	Approx. Qty.	UOM	Article and Description	Unit Price	Awarded Vendor
			Item 14 - Continued		
				0%	(BT)
				0%	(BU)
				2%	(BV)
				0%	(BW)
				0%	(BX)
				0%	(BY)
15	**1**	**Day**	**Daily per diem rate for overnight stay as needed. Including dinner and breakfast per person. Bidders should provide a Per Diem Rate that does not exceed the Per Diem Rate defined above in this bid. If a Per Diem Rate is not submitted by the Bidder, the defined rate shall be the default.**		
				$150.00	(AA)
				$125.00	(AB)
				$50.00	(AC)
				$150.00	(AD)
				$180.00	(AE)
				$175.00	(AF)
				$100.00	(AG)
				$175.00	(AH)
				$125.00	(AI)
				$195.00	(AJ)
				$150.00	(AK)
				$131.00	(AL)
				$130.00	(AM)
				$210.00	(AN)
				$195.00	(AO)
				$250.00	(AP)
				$55.00	(AQ)
				$157.00	(AR)
				$150.00	(AS)
				$185.00	(AT)
				$163.00	(AU)
				$276.00	(AV)
				$170.00	(AW)
				$150.00	(AX)
				$185.00	(AY)
				$175.00	(AZ)
				$185.00	(BA)
				$100.00	(BB)
				$120.00	(BC)
				$150.00	(BD)
				$184.75	(BE)
				$120.00	(BF)
				$155.00	(BG)

DocuSign Envelope ID: 9C0D0BCE-1F94-4323-9C4D-6BA4D233D2D9

Item	Approx. Qty.	UOM	Article and Description	Unit Price	Awarded Vendor
			Item 15 - Continued		
				$120.00	(BH)
				$225.00	(BI)
				$100.00	(BJ)
				$125.00	(BK)
				$203.71	(BL)
				$66.00	(BM)
				$125.00	(BN)
				$285.00	(BO)
				$150.00	(BP)
				$195.00	(BQ)
				$125.00	(BR)
				$195.00	(BS)
				$150.00	(BT)
				$185.00	(BU)
				$157.00	(BV)
				$200.00	(BW)
				$260.00	(BX)
				$115.00	(BY)
16	**1**	**Mile**	**One way per mile cost, per service vehicle required, measured from the awarded Contractor's office/shop to the requested job site, for travel in excess of 50 miles one way, based on mapquest.com. Bidders should provide a Mileage Rate that does not exceed the IRS Mileage Rate linked above. If a Mileage Rate is not submitted by the Bidder, the defined rate shall be the default.**		
				$0.50	(AA)
				$1.25	(AB)
				$0.65	(AC)
				$2.50	(AD)
				$1.25	(AE)
				$0.66	(AF)
				$10.00	(AG)
				$1.26	(AH)
				$0.655	(AI)
				$0.66	(AJ)
				$1.00	(AK)
				$0.66	(AL)
				$0.65	(AM)
				$0.655	(AN)
				$1.55	(AO)
				$3.50	(AP)
			* per mile	$1.50	(AQ)
				$1.50	(AR)
				$20.00	(AS)
				$10.00	(AT)

DocuSign Envelope ID: 9C0D0BCE-1F94-4323-9C4D-6BA4D233D2D9

Item	Approx. Qty.	UOM	Article and Description	Unit Price	Awarded Vendor
			Item 16 - Continued		
				0.655	(AV)
				$0.65	(AW)
				$0.65	(AX)
				$4.50	(AY)
				$3.00	(AZ)
				$10.00	(BA)
				$0.655	(BB)
				$0.65	(BC)
				$4.00	(BD)
				$0.66	(BE)
				$8.50	(BF)
				$0.65	(BG)
			* cents per mile	$0.655	(BH)
				$1.50	(BI)
				$10.00	(BJ)
				$0.75	(BK)
				$0.74	(BL)
				$5.00	(BM)
				$1.00	(BN)
				$3.75	(BO)
				$0.87	(BP)
				$1.85	(BQ)
				$0.655	(BR)
				$1.25	(BS)
				$0.57	(BT)
				$2.50	(BU)
				$0.25	(BV)
				$1.75	(BW)
				$0.655	(BX)
				$8.50	(BY)

***** 16 Awarded Items Total*****

DocuSign

Certificate Of Completion

Envelope Id: 9C0D0BCE1F9443239C4D6BA4D233D2D9
Status: Completed
Subject: GSD/SPD Procurement#: 40-00000-23-00034 General Construction Award
Source Envelope:
Document Pages: 45
Signatures: 1
Certificate Pages: 5
Initials: 2
AutoNav: Enabled
EnvelopeId Stamping: Enabled
Time Zone: (UTC-07:00) Mountain Time (US & Canada)

Envelope Originator:
Tami Concha
1100 S Saint Francis Dr
Santa Fe, NM 87502
Tami.Concha@gsd.nm.gov
IP Address: 164.64.63.2

Record Tracking

Status: Original
12/29/2023 1:05:04 PM
Security Appliance Status: Connected
Storage Appliance Status: Connected

Holder: Tami Concha
Tami.Concha@gsd.nm.gov
Pool: StateLocal
Pool: GSD

Location: DocuSign

Location: DocuSign

Signer Events	Signature	Timestamp
Michael Saavedra Michael.Saavedra@gsd.nm.gov New Mexico General Services Security Level: Email, Account Authentication (None)	MS Signature Adoption: Pre-selected Style Using IP Address: 164.64.62.10	Sent: 12/29/2023 1:13:14 PM Viewed: 12/29/2023 1:13:44 PM Signed: 12/29/2023 1:13:50 PM
Electronic Record and Signature Disclosure: Accepted: 6/4/2020 11:04:51 AM ID: 9cac1b3e-4279-4c8f-b2b4-c607ea9821d8		
Tami Concha tami.concha@gsd.nm.gov Procurement Specialist II New Mexico General Services, State Purchasing Division Security Level: Email, Account Authentication (None)	JC Signature Adoption: Pre-selected Style Using IP Address: 164.64.62.10	Sent: 12/29/2023 1:13:54 PM Viewed: 12/29/2023 1:14:14 PM Signed: 12/29/2023 1:14:21 PM
Electronic Record and Signature Disclosure: Not Offered via DocuSign		
Natalie Martinez natalie.martinez1@gsd.nm.gov Deputy Director New Mexico General Services Security Level: Email, Account Authentication (None)	Natalie Martinez Signature Adoption: Pre-selected Style Using IP Address: 164.64.62.10	Sent: 12/29/2023 1:14:25 PM Viewed: 12/29/2023 1:23:23 PM Signed: 12/29/2023 1:27:07 PM
Electronic Record and Signature Disclosure: Not Offered via DocuSign		

In Person Signer Events	Signature	Timestamp

Editor Delivery Events	Status	Timestamp

Agent Delivery Events	Status	Timestamp

Intermediary Delivery Events	Status	Timestamp

Certified Delivery Events	Status	Timestamp

Carbon Copy Events	Status	Timestamp

Witness Events	Signature	Timestamp

Notary Events	Signature	Timestamp

Envelope Summary Events	Status	Timestamps
Envelope Sent	Hashed/Encrypted	12/29/2023 1:13:14 PM
Certified Delivered	Security Checked	12/29/2023 1:23:23 PM
Signing Complete	Security Checked	12/29/2023 1:27:07 PM
Completed	Security Checked	12/29/2023 1:27:07 PM

Payment Events	Status	Timestamps

Electronic Record and Signature Disclosure

ELECTRONIC RECORD AND SIGNATURE DISCLOSURE

A. ELECTRONIC RECORD AND SIGNATURE DISCLOSURE (ERSD)

From time to time, New Mexico General Services Department (GSD), on behalf of the State of New Mexico (SONM), may be required by law to provide you with certain written notices or disclosures. Stated below are the terms and conditions for GSD's providing you such notices and disclosures electronically through the DocuSign system. Please read this information carefully. If you are able to access this information electronically and agree to **this Electronic Record and Signature Disclosure (ERSD)**, please confirm your agreement by selecting the check-box next to "I agree to use electronic records and signatures" before clicking "CONTINUE" within the DocuSign system.

B. Obtaining paper copies

At any time up to twenty (20) calendar days following your use of DocuSign to electronically sign a document, you may request a paper copy of any record provided or made available electronically to you by GSD. You will have the ability to download and print documents SONM sends you through the DocuSign system during and immediately after the signing session and, if you elect to create a DocuSign account, you may access the documents for a twenty (20) calendar day period after such documents are first sent to you. Following the twenty (20) day period, if you want GSD to send you paper copies of any such documents from GSD's office, you will be charged a $1.00 per-page fee plus postage. You may request delivery of such paper copies from GSD by following the procedure stated in Section H, below.

C. Withdrawing your consent

If you decide to receive notices and disclosures from GSD electronically, you may at any time change your mind and inform GSD you want to receive required notices and disclosures only in paper format. The procedure concerning how you may inform GSD of your decision to receive future notices and disclosures in paper format as well as withdraw your consent to receive notices and disclosures electronically is stated in Section D, immediately below.

D. Consequences of changing your mind

If you elect to receive required notices and disclosures only in paper format, it will slow the speed with which GSD will be able to complete certain steps in specific transactions and deliver paper copies to you. GSD will need: (1) to send the required notices or disclosures to you in paper format; and (2) wait until GSD receives your acknowledgment of your receipt of such paper notices or disclosures. Further, you will no longer be able to use the DocuSign system to receive required notices and consents electronically from SONM or to electronically sign documents generated and sent to you from SONM.

E. All notices and disclosures will be sent to you electronically

Unless you inform GSD otherwise according to these procedures, GSD will electronically provide you through the DocuSign system all required notices, disclosures, authorizations, acknowledgements and other documents that are required to be provided or made available to you during the course of your electronic signature relationship with SONM. To reduce the possibility of inadvertent non-receipt, GSD prefers to provide all required notices and disclosures by the same method and to the same email or physical address that you furnish to GSD. Thus, you may receive the disclosures and notices electronically or in paper form. If you do not agree with this procedure, please inform GSD according to the procedures stated in Section I, below. Please also refer to Section D, immediately above, which states the consequences resulting from your declination of electronic delivery of notices and disclosures.

F. How to contact GSD:

You may inform General Services Department (GSD) of any changes you select regarding State Purchasing Division's (SPD) electronic communications with you, to request paper copies of certain information from SPD, and to withdraw your prior consent to receive notices and disclosures electronically by emailing your request(s) to SPD at: *GSD.SPDinfo@state.nm.us*

G. To advise SPD of your new email address

To inform SPD of a change in the email address to which SPD sends you notices and disclosures electronically, you must send an email to SPD at *GSD.SPDinfo@state.nm.us* and in the body of such request you must include your previous and new email addresses.

H. To request paper copies from SPD

To request delivery of paper copies of electronic notices and disclosures that DocuSign and/or SPD have previously provided to you, you must send an email to SPD at *GSD.SPDinfo@state.nm.us* and in the body of your email request state your email address, full name, mailing address, and telephone number. SPD will charge you a $1.00 per page copy fee plus postage.

I. To withdraw your consent with SPD

To inform SPD that you no longer wish to receive notices and disclosures in electronic format you may:

(1) Decline to sign a document from within a signing session, and on the subsequent page, select the check-box indicating you wish to withdraw your consent, or you may:

(2) Send SPD an email to *GSD.SPDinfo@state.nm.us* and in the body of your request state your email address, full name, mailing address, and telephone number.

J. Required hardware and software

The minimum system requirements for using the DocuSign system may change over time. The current DocuSign system requirements may be found at:
https://support.docusign.com/guides/signer-guide-signing-system-requirements

K. Acknowledging your access and consent to receive and sign documents electronically

To confirm that you are able to electronically access the information contained in this Electronic Record and Signature Disclosure (ERSD), please confirm that you have: (1) read this ERSD, and either: (2) you are able to print on paper or electronically save this ERSD for your future reference and access; or (3) you are able to email this ERSD to an email address where you will be able to print this ERSD on paper and/or save this ERSD for your future reference and access. Further, if you consent to receiving notices and disclosures from DocuSign and/or SPD exclusively in electronic format, then select the check-box next to “I agree to use electronic records and signatures,” before you click “CONTINUE” within the DocuSign system.

By selecting the check-box next to “I agree to use electronic records and signatures,” you confirm that:

- You have read this Electronic Record and Signature Disclosure (ERSD); and
- You can print this ERSD on paper, or you can save and/ or send this ERSD to a location where you can print this ERSD, for your future reference and access; and
- Until or unless you notify SPD as stated in this ERSD, you consent to exclusively receive through electronic means all notices, disclosures, authorizations, acknowledgements, and other documents that are required to be provided or made available to you by SPD during the course of your electronic signature relationship with SPD.

Item #: _____
Munis Contract #: 3260188_____
SWPA #: 40-00000-23-00074

CITY OF SANTA FE

CONSTRUCTION CONTRACT

THIS CONTRACT is made and entered into by and between the City of Santa Fe, New Mexico, hereinafter referred to as the "City," and **HEI Inc.**, hereinafter referred to as the "Contractor," and is effective as of the date set forth below upon which it is executed by the Parties.

RECITALS

WHEREAS, the City, through its Governing Body, is authorized to enter into a construction Contract for the project; and

WHEREAS, the City has procured this Contract according to the established State and Local Purchasing procedures for contracts of the type and amount; and

The City and the Contractor hereby agree as follows:

1. Scope of Work

A. The Contractor shall perform the following work:

The Contractor shall perform all the work required by the Contract Documents for the City of Santa Fe.

Contractor shall bid for each Task Order based on, and follow after receiving a Notice to Proceed, the process below.

Mobilization

- Site setup and mobilization of resources
- Erecting temporary facilities (trailers, utilities, safety barriers)
- Permitting and regulatory compliance documentation

Site Preparation

- Clearing
- Demolition (if required)
- Excavation, grading, and compaction

Construction Work

- **Structural Work**
  - Foundations, slabs, columns, beams, structural framing
- **Architectural Work**
  - Walls, roofing, insulation, windows, doors, interior finishes
- **Civil/Infrastructure**
  - Roadways, sidewalks, parking lots, storm drainage

Quality Assurance & Inspections

- Submit and follow a quality control plan

- Conduct and document required inspections and testing
- Resolve any deficiencies or punch list items

Health, Safety, and Environmental Compliance

- Implement a project-specific safety plan
- Comply with OSHA and environmental regulations
- Dust, noise, erosion, and waste control

Project Closeout

- Final inspections and approvals
- Delivery of as-built drawings, warranties, manuals
- Demobilization and site cleanup

The Contractor shall be responsible for verifications of all conditions, measurements, and dimensions for bidding.

The Contractor shall be responsible for all permits, fees, and State inspections associated with the construction.

Task Orders:

Under the terms and conditions of and this contract, the Airport Director, Director of Public Works, Facilities Division Director, Project Manager, and Project Administrator (collectively "Project Manager") may issue Task Orders for items described herein. The terms and conditions shall be incorporated in each Task Order issued hereunder.

The Project Manager may issue a written Task Order to the Contractor detailing the services required. Upon receiving the Task Order, the Contractor shall promptly provide the Project Manager with an estimate, based upon the rates included in Contractor's Statewide Price Agreement (SWPA), a cost summary, and a proposed schedule required to complete the assignment or task. project schedules, negotiated price, and completion dates shall be determined on project-by-project basis and dependent upon the urgency of that task. The Contractor may be required to do some of the work in phases. The Project Manager may issue a Notice to Proceed by signing the Notice after the task price and schedule are finalized by the Contractor. The Contractor shall be required to provide the requested labor and all equipment and materials within one week of a request issuance of a Notice to Proceed unless otherwise arranged. The Contractor shall agree to provide required labor within 24 hours for emergency situations whenever possible. The Contractor shall not perform any work without a Notice to Proceed signed by the Project Manager, and the City shall not pay for any work performed without a signed Notice to Proceed.

The items to be ordered shall be as listed in the Price Schedule. All orders issued hereunder will bear both an order number and the Purchase Order Number.

Items and/or services furnished hereunder shall conform to the requirements of specifications and/or drawings applicable to items listed under the Price Schedule. Orders issued against this schedule will show the applicable item(s), number(s), and price(s); however, they may not describe the item(s) fully.

Price Adjustments:

The awarded vendor shall maintain fixed pricing for each year of this contract, defined as twelve (12) months starting on and including the Effective Date. Pricing may be adjusted no more than once annually to

commercially reasonable rates through an amendment to the price list attached as Exhibit A signed by Contractor and the City's Director of Public Works. Amendments to Exhibit A do not alter Contractor's maximum total compensation pursuant to Article 2 (Compensation) below. The vendor must submit all pricing increase requests in writing to the Director of Public Works, providing evidence that the request is based on demonstrable market changes impacting the cost of products and services. The request must itemize all proposed changes by line item and include supporting documentation deemed acceptable by the City of Santa Fe (such as a letter from a manufacturer indicating price increases, etc.). The Airport Director's or Project Manager's decision on acceptable documentation in this context shall be final and binding upon all parties to the contract. No price increase shall result in a higher profit margin. Pricing changes will apply to Task Orders for which the Notice to Proceed is signed by the Project Manager on or after the effective date of the price change. Price increases will not be retroactive to purchase orders already issued. The maximum payment for each Task Order shall be the price indicated in the purchase order issued by the City.

To facilitate prompt consideration, all requests for price increases must include the following information:

Contract Item Number
Current Item Price
Proposed New Price
Percentage of Increase
Supplier Notification of price increase indicating percentage of increase and including the reason for the increase.

B. Project: City Wide Oncall Construction with HEI

C. City Department: Airport

D. Distribution:

City: James Garduno, Airport Project Manager
jdgarduno@santafenm.gov, 505-670-3232

Contractor: Rachelle Casuga, HEI Inc., Business Owner
rcasuga@heinm.com, 505-880-1819

Neil Hurd, HEI Inc., Business Owner
nhurd@heinm.com, 505-880-1819

2. **Compensation**

A. The City shall pay to the Contractor in full payment for services satisfactorily performed at the (BASED UPON DELIVERABLES, MILESTONES, BUDGET, ETC.), such compensation not to exceed $10,000,000.00 (ten million dollars) excluding gross receipts tax. The New Mexico gross receipts tax levied on the amounts payable under this Contract shall be paid by the City to the Contractor only on the labor rate listed within the Statewide Price Agreement (40-00000-23-00074).

The Unit Bid Contract Total is determined as follows:

On-Cal for Construction Services

The total amount payable to the Contractor under this Contract, including Alternates (if needed) gross receipts tax and expenses, shall not exceed Ten Million Dollars ($10,000,000.00). This amount is a maximum and not a guarantee that the work assigned to be performed by Contractor under this Contract shall equal the amount stated herein. The parties do not intend for the Contractor to continue to provide services without compensation when the total compensation amount is reached. Contractor is responsible for notifying the City when the services provided under this Contract reach the total compensation amount. In no event will the Contractor be paid for services provided in excess of the total compensation amount without this Contract being amended in writing prior to those services in excess of the total compensation amount being provided.

A. The total amount payable to the Contractor under this Contract, excluding/including gross receipts tax and expenses, shall not exceed $10,000,000.00 for the term of this Contract.

The City shall pay to the Contractor in full payment for services satisfactorily performed pursuant to the Task Order assigned to Contractor at the rate set forth in [procurement – offer in response to SWPA # 40-0000-23-00034.

B. Payment in future fiscal years is subject to availability of funds pursuant to the Appropriations Paragraph set forth below and to any negotiations between the parties from year to year pursuant to Paragraph 1, Scope of Work, and to approval by the City. All invoices MUST BE received by the City no later than fifteen (15) days after the termination of the Fiscal Year in which the services were delivered. Invoices received after such date WILL NOT BE PAID.)

C. Contractor must submit a detailed statement accounting for all services performed and expenses incurred. If the City finds that the services are not acceptable, within thirty days after the date of receipt of written notice from the Contractor that payment is requested, it shall provide the Contractor a letter of exception explaining the defect or objection to the services, and outlining steps the Contractor may take to provide remedial action. Upon certification by the City that the services have been received and accepted, payment shall be tendered to the Contractor within twenty-one days after the date of acceptance. If payment is made by mail, the payment shall be deemed tendered on the date it is postmarked. .

D. If the City fails to pay the contractor within twenty-one days after receipt of an undisputed request for payment, the City shall pay interest to the contractor beginning on the twenty-second day after payment was due, computed at one and one-half percent of the undisputed amount per month or fraction of a month until the payment is issued. If the City receives an improperly completed invoice, the City shall notify the sender of the invoice within seven days of receipt in what way the invoice is improperly completed, and the owner has no further duty to pay on the improperly completed invoice until it is resubmitted as complete.

E. **Notice of Extended Payment Provision for Grant Funded Contracts**. This contract allows the City to make payment within 45 days after submission of an undisputed request for payment for contracts funded by grant money consistent with NMSA 1978, sec. 57-28-5(B).

3. Term

THIS CONTRACT SHALL NOT BECOME EFFECTIVE UNTIL APPROVED IN WRITING BY THE CITY. This contract shall terminate **two (2) years from date of final signature**.

4. Termination

A. Grounds. The City may terminate this Contract for convenience or cause. For contracts within their authority, the City Manager or their designee is authorized to provide the notice of termination, otherwise such notice of termination shall be provided by the Mayor or their designee as authorized by the Governing Body. The Contractor may only terminate this Contract based upon the City's uncured, material breach of this Contract.

B. Notice; City Opportunity to Cure.

1) Except as otherwise provided in Paragraphs 7.A and 17, the City shall give Contractor written notice of termination at least thirty (30) days prior to the intended date of termination.

2) Contractor shall give City written notice of termination at least thirty (30) days prior to the intended date of termination, which notice shall (i) identify all the City's material breaches of this Contract upon which the termination is based and (ii) state what the City must do to cure such material breaches. Contractor's notice of termination shall only be effective (i) if the City does not cure all material breaches within the thirty (30) day notice period or (ii) in the case of material breaches that cannot be cured within thirty (30) days, the City does not, within the thirty (30) day notice period, notify the Contractor of its intent to cure and begin with due diligence to cure the material breach.

3) Notwithstanding the foregoing, this Contract may be terminated immediately upon written notice to the Contractor (i) if the Contractor becomes unable to perform the services contracted for, as determined by the City; (ii) if, during the term of this Contract, the Contractor is suspended or debarred by the City; or (iii) the Contract is terminated pursuant to Paragraph 5, "Appropriations," of this Contract.

C. Liability. Except as otherwise expressly allowed or provided under this Contract, the City's sole liability upon termination shall be to pay for acceptable work performed prior to the Contractor's receipt or issuance of a notice of termination; provided, however, that a notice of termination shall not nullify or otherwise affect either party's liability for pre-termination defaults under or breaches of this Contract. The Contractor shall submit an invoice for such work within thirty (30) days of receiving or sending the notice of termination. *THIS PROVISION IS NOT EXCLUSIVE AND DOES NOT WAIVE THE CITY'S OTHER LEGAL RIGHTS AND REMEDIES CAUSED BY THE CONTRACTOR'S DEFAULT/BREACH OF THIS CONTRACT.*

5. Appropriations

The terms of this Contract are contingent upon sufficient appropriations and authorization being made by the Governing Body for the performance of this Contract. If sufficient appropriations and authorization are not made by the Governing Body, this Contract shall terminate immediately upon written notice being given by the City to the Contractor. The City's decision as to whether sufficient appropriations are available shall be accepted by the Contractor and shall be final. If the City proposes an amendment to the Contract to unilaterally reduce funding, the Contractor shall have the option to terminate the Contract or to agree to the reduced funding, within thirty (30) days of receipt of the proposed amendment.

6. Status of Contractor

The Contractor and its agents and employees are independent contractors performing construction services for the City and are not employees of the City. The Contractor and its agents and employees shall not accrue leave, retirement, insurance, bonding, use of City vehicles, or any other benefits afforded to employees of the City as a result of this Contract. The Contractor acknowledges that all sums received hereunder are reportable by the Contractor for tax purposes, including without limitation, self-employment and business income tax. The Contractor agrees not to purport to bind the City unless the Contractor has express written authority to do so, and then only within the strict limits of that authority.

7. Construction Contract Performance and Payment Bond

A. When a construction contract is awarded in excess of twenty-five thousand dollars ($25,000), the following bonds or security shall be delivered to the City and shall become binding on the parties upon the execution of the contract. If the Contractor fails to deliver the required performance and payment bonds, the Contractor's bid shall be rejected, its bid security shall be enforced to the extent of actual damages. Award of the contract shall be made pursuant to the Procurement Code in the following manner:

(1) a performance bond satisfactory to the City, executed by a surety company authorized to do business in this state and said surety to be approved in federal circular 570 as published by the United States treasury department or the state board of finance or the local governing authority, in an amount equal to one hundred percent of the price specified in the contract; and

(2) a payment bond satisfactory to the City, executed by a surety company authorized to do business in this state and said surety to be approved in federal circular 570 as published by the United States treasury department or the state board of finance or the local governing authority, in an amount equal to one hundred percent of the price specified in the contract, for the protection of all persons supplying labor and material to the contractor or its subcontractors for the performance of the work provided for in the contract.

B. A subcontractor shall provide a performance and payment bond on a public works building project if the subcontractor's contract for work to be performed on a project is one hundred twenty-five thousand dollars ($125,000) or more.

8. Assignment

The Contractor shall not assign or transfer any interest in this Contract or assign any claims for money due or to become due under this Contract without the prior written approval of the City.

9. Subcontracting

The Contractor shall not subcontract any portion of the services to be performed under this Contract without the prior written approval of the City. No such subcontract shall relieve the primary Contractor from its obligations and liabilities under this Contract, nor shall any subcontract obligate direct payment from the City.

10. Release

Final payment of the amounts due under this Contract shall operate as a release of the City, its officers and employees from all liabilities, claims and obligations whatsoever arising from or under this Contract.

11. Confidentiality

Any confidential information provided to or developed by the Contractor in the performance of this Contract shall be kept confidential and shall not be made available to any individual or organization by the Contractor without the prior written approval of the City.

12. Product of Service -- Copyright

All materials developed or acquired by the Contractor under this Contract shall become the property of the City and shall be delivered to the City no later than the termination date of this Contract. Nothing developed or produced, in whole or in part, by the Contractor under this Contract shall be the subject of an application for copyright or other claim of ownership by or on behalf of the Contractor.

13. Conflict of Interest; Governmental Conduct Act

A. The Contractor represents and warrants that it presently has no interest and, during the term of this Contract, shall not acquire any interest, direct or indirect, which would conflict in any manner or degree with the performance or services required under the Contract.

B. The Contractor further represents and warrants that it has complied with, and, during the term of this Contract, will continue to comply with, and that this Contract complies with all applicable provisions of the Governmental Conduct Act, Chapter 10, Article 16 NMSA 1978.

C. Contractor's representations and warranties in Paragraphs A and B of this Article 12 are material representations of fact upon which the City relied when this Contract was entered into by the parties. Contractor shall provide immediate written notice to the City if, at any time during the term of this Contract, Contractor learns that Contractor's representations and warranties in Paragraphs A and B of this Article 12 were erroneous on the effective date of this Contract or have become erroneous by reason of new or changed circumstances. If it is later determined that Contractor's representations and warranties in Paragraphs A and B of this Article 12 were erroneous on the effective date of this Contract or have become erroneous by reason of new or changed circumstances, in addition to other remedies available to the City and notwithstanding anything in the Contract to the contrary, the City may immediately terminate the Contract.

D. All terms defined in the Governmental Conduct Act have the same meaning in this section.

14. Amendment

A. This Contract shall not be altered, changed or amended except by instrument in writing executed by the parties hereto and all other required signatories.

B. If the City proposes an amendment to the Contract to unilaterally reduce funding due to budget or other considerations, the Contractor shall, within thirty (30) days of receipt of the proposed Amendment, have the option to terminate the Contract, pursuant to the termination provisions as set forth in Article 4 herein, or to agree to the reduced funding.

15. Change Orders

A. Changes. The Contractor may only make changes or revisions within the Scope of Work as defined by Article 1 and/or Exhibit 1 after receipt of written approval by the City Manager or his/her designee. Such change may only be made to Tasks or Sub-Task as defined in the Scope of Work. Under no circumstance shall such change affect the:

1) Deliverable requirements, as outlined in the Scope of Work;
2) Due date of any Deliverable, as outlined in the Scope of Work;

3) Compensation of any Deliverable, as outlined in the Scope of Work;
4) Contract compensation, as outlined in Article 2; or
5) Contract termination, as outlined in Article 4.

B. Change Request Process. In the event that circumstances warrant a change to accomplish the Scope of Work as described above, a Change Request shall be submitted that meets the following criteria:

1) The Project Manager shall draft a written Change Request for review and approval by the City Manager to include:
(a) the name of the person requesting the change;
(b) a summary of the required change;
(c) the start date for the change;
(d) the reason and necessity for change;
(e) the elements to be altered; and
(f) the impact of the change.

2. The City Manager shall provide a written decision on the Change Request to the Contractor within a maximum of ten (10) Business Days of receipt of the Change Request. All decisions made by the City Manager are final. Change Requests, once approved, become a part of the Contract, and become binding as a part of the original Contract.

16. Merger

This Contract incorporates all the agreements, covenants, and understandings between the parties hereto concerning the subject matter hereof, and all such covenants, agreements and understandings have been merged into this written contract.

Statewide/Existing Agreements 13-1-129

This Contract is issued against the state or agency Master Agreement, established and maintained by the State of New Mexico, SWPA# 40-00000-23-00034, and through this language hereby incorporates this Contract by reference and is included in the order of precedence.

No prior Agreement or understanding, oral or otherwise, of the parties or their agents shall be valid or enforceable unless embodied in this Contract.

17. Penalties for violation of law

NMSA 1978, sections 13-1-28 through 13-1-199, imposes civil and criminal penalties for its violation. In addition, the New Mexico criminal statutes impose felony penalties for illegal bribes, gratuities and kickbacks.

18. Equal Opportunity Compliance

The Contractor agrees to abide by all federal and state laws and rules and regulations, and Santa Fe City Code, pertaining to equal employment opportunity. In accordance with all such laws of the State of New Mexico, the Contractor assures that no person in the United States shall, on the grounds of race, religion, color, national origin, ancestry, sex, age, physical or mental handicap, or serious medical condition, spousal affiliation, sexual orientation or gender identity, be excluded from employment with or participation in, be denied the benefits of, or be otherwise subjected to discrimination under any program or activity performed under this Contract. If Contractor is found not to be in compliance with these requirements during the life of this Contract, Contractor agrees to take appropriate steps to correct these deficiencies.

19. Applicable Law

The laws of the State of New Mexico shall govern this Contract, without giving effect to its choice of law provisions. Venue shall be proper only in a New Mexico court of competent jurisdiction in accordance with NMSA 1978, section 38-3-2. By execution of this Contract, Contractor acknowledges and agrees to the jurisdiction of the courts of the State of New Mexico over any and all lawsuits arising under or out of any term of this Contract.

20. Workers Compensation

The Contractor agrees to comply with state laws and rules applicable to workers compensation benefits for its employees. If the Contractor fails to comply with the Workers Compensation Act and applicable rules when required to do so, this Contract may be terminated by the City.

21. Other Insurance

If the services contemplated under this Contract will be performed on or in City facilities or property, Contractor shall maintain in force during the entire term of this Contract, the following insurance coverage(s), naming the City as additional insured.

A. **Commercial General Liability** insurance shall be written on an occurrence basis and be a broad as ISO Form CG 00 01 with limits not less than $2,000,000 per occurrence and $2,000,000 in the aggregate for claims against bodily injury, personal and advertising injury, and property damage. Said policy shall include broad form Contractual Liability coverage and be endorsed to name the City of Santa Fe their officials, officers, employees, and agents as additional insureds.

B.

C. **Broader Coverage and Limits**. The insurance requirements under this Contract shall be the greater of (1) the minimum coverage and limits specified in this Contract, or (2) the broader coverage and maximum limits of coverage of any insurance policy or proceeds available to the Named Insured. It is agreed that these insurance requirements shall not in any way act to reduce coverage that is broader or that includes higher limits than the minimums required herein. No representation is made that the minimum insurance requirements of this Contract are sufficient to cover the obligations of Contractor hereunder.

D. Contractor shall maintain the above insurance for the term of this Contract and name the City as an additional insured and provide for 30 days cancellation notice on any Certificate of Insurance form furnished by Contractor. Such certificate shall also specifically state the coverage provided under the policy is primary over any other valid and collectible insurance and provide a waiver of subrogation.

22. Records and Financial Audit

The Contractor shall maintain detailed time and expenditure records that indicate the date; time, nature and cost of services rendered during the Contract's term and effect and retain them for a period of three (3) years from the date of final payment under this Contract. The records shall be subject to inspection by the City. The City shall have the right to audit billings both before and after payment. Payment under this Contract shall not foreclose the right of the City to recover excessive or illegal payments

23. Indemnification

The Contractor shall defend, indemnify and hold harmless the City from all actions, proceeding, claims, demands, costs, damages, attorneys' fees and all other liabilities and expenses of any kind from any source which may arise out of the performance of this Contract, caused by the negligent act or failure to act of the Contractor, its officers, employees, servants, subcontractors or agents, or if caused by the actions of any client of the Contractor resulting in injury or damage to persons or property during the time when the Contractor or any officer, agent, employee, servant or subcontractor thereof has or is performing services pursuant to this Contract. In the event that any action, suit or proceeding related to the services performed by the Contractor or any officer, agent, employee, servant or subcontractor under this Contract is brought against the Contractor, the Contractor shall, as soon as practicable but no later than two (2) days after it receives notice thereof, notify the legal counsel of the City.

24. New Mexico Tort Claims Act

Any liability incurred by the City of Santa Fe in connection with this Contract is subject to the immunities and limitations of the New Mexico Tort Claims Act, Section 41-4-1, et. seq. NMSA 1978, as amended. The City and its "public employees" as defined in the New Mexico Tort Claims Act, do not waive sovereign immunity, do not waive any defense and do not waive any limitation of liability pursuant to law. No provision in this Contract modifies or waives any provision of the New Mexico Tort Claims Act.

25. Invalid Term or Condition

If any term or condition of this Contract shall be held invalid or unenforceable, the remainder of this Contract shall not be affected and shall be valid and enforceable.

26. Enforcement of Contract

A party's failure to require strict performance of any provision of this Contract shall not waive or diminish that party's right thereafter to demand strict compliance with that or any other provision. No waiver by a party of any of its rights under this Contract shall be effective unless express and in writing, and no effective waiver by a party of any of its rights shall be effective to waive any other rights.

27. Notices

Any notice required to be given to either party by this Contract shall be in writing and shall be delivered in person, by courier service or by U.S. mail, either first class or certified, return receipt requested, postage prepaid, as follows:

To the City: Sebastian Gallegos, Airport Project Administrator,
sfgallegos@santafenm.gov
505-695-3538

To the Contractor: Rachelle Casuga, HEI Inc., Business Owner
rcasuga@heinm.com, 505-880-1819

Neil Hurd, HEI Inc., Business Owner
nhurd@heinm.com, 505-880-1819

28. Authority

If Contractor is other than a natural person, the individual(s) signing this Contract on behalf of Contractor represents and warrants that he or she has the power and authority to bind Contractor, and that no further action, resolution, or approval from Contractor is necessary to enter into a binding contract.

29. Progress Payments

Based upon Application for Payment submitted to the City by the Contractor and Certificates for Payment issued by the City, the City shall make progress payments on account of the Contract sum to the Contractor as provided in the Contract documents for the period ending the last day of the month as follows:

Not later than twenty-one (21) days following the end of the period covered by the Application for Payment, one hundred percent (100%) of the portion of the Contract Sum properly allocable to labor, materials, and equipment incorporated in the work and one hundred percent (100%) of the portion of the Contract sum properly allocable to materials and equipment suitably stored at the site or some other location agreed upon in writing for the period covered by the Application for Payment, less the aggregate of previous payments made by the City; and upon substantial completion of the entire work, a sum sufficient to increase the total payments to one hundred percent (100%) of the Contract sum, less such amounts as the City shall determine for all incomplete work and unsettled claims as provided in the Contract documents.

30. Final Payment

Final payment, constituting the entire unpaid balance of the Contract sum, unless it is a disputed payment, shall be paid by the City to the Contractor within twenty-one (21) calendar days, after all deficiencies to the Contract document that were noted during the Substantial Completion Inspection and listed on the attachment to the Certificate of Substantial Completion have been corrected, and provided the Contract has been fully performed and a final Certificate for Payment has been issued by the City. In addition, the Contractor shall provide to the City a certified statement of Release of Lien (AIA Document G706A or approved form), Consent of Surety, Warranty from Prime Contractor, Warranties from Suppliers and Manufacturers, training sessions, equipment/operating manuals, and as-built drawings.

31. Schedule

The Contractor shall, within five (5) days after the effective date of Notice to Proceed, prepare and submit a progress schedule covering project operations for the 30-day Contract period. This progress schedule shall be of the type generally referred to as a Critical Path Method (CPM), Critical Path Schedule (CPS), and Critical Path Analysis (CPA), and other similar designations. The CPM shall be used to control the timing and sequences of the project. All work shall be done in accordance with the CPM Planning and Scheduling. A written statement of explanation shall be submitted with the progress schedule. All costs incurred by the contractor to implement the CPM shall be borne by the Contractor and are part of their Contract.

32. General and Special Provisions

A. Terms used in this Contract which are defined in the Conditions of the Contract shall have the meanings designated in those Conditions.

B. An enumeration of the Contractor's General Comprehensive Liability Insurance requirements appears in the General Conditions of the Contract for construction. Insurance requirements are also described in the Instructions to the Bidder section of the Project Manual. Contractor shall maintain

adequate insurance in at least the maximum amounts, which the City could be liable under the New Mexico Tort Claims Act and shall provide proof of such insurance coverage to the City. It is the sole responsibility of the Contractor to comply with the law.

C. This Contract shall not become effective until: (1) approved by the Governing Body; and (2) signed by all parties required to sign this Contract.

D. The Contractor shall maintain detailed time records which indicate the date, time and nature of services rendered. These records shall be subject to inspection by the City, the Department of Finance and Administration and the State Auditor. The City shall have the right to audit billings both before and after payment. Payment under this Contract shall not foreclose the right of the City to recover excessive illegal payments.

E. The Contractor warrants that the Contractor presently has no interest and shall not acquire any interest, direct or indirect, which would conflict in any manner or degree with the performance or services required under this Contract.

F. The Contractor hereby warrants that the Contractor complies with the Americans with Disabilities Act, 29 CFR 1630.

G. Gender, Singular/Plural. Words of any gender used in this Contract shall be held and construed to include any other gender, and words in the singular number shall be held to include the plural, unless the context otherwise requires.

H. Captions and Section Headings. The captions and section headings contained in this Contract are for convenience of reference only, and in no way limit, define, or enlarge the terms, scope, and conditions of this Contract.

I. Certificates and Documents Incorporated. All certificates and documentation required by the provisions of the Contract shall be attached to this Contract at the time of execution and are hereby incorporated by reference as though set forth in full in this Contract to the extent they are consistent with its conditions and terms.

J. Separability. If any clause or provision of this Contract is illegal, invalid or unenforceable under present or future laws effective during the term of this Contract, then and in that event, it is the intention of the parties hereto that the remainder of this Contract shall not be affected thereby.

K. Words and Phrases. Words, phrases, and abbreviations, which have well-known technical or trade meanings used in the Contract documents shall be used according to such recognized meaning. In the event of a conflict, the more stringent meaning shall govern.

L. Relationship of Contract Documents. The Contract Documents are complementary, and any requirement of one Contract Document shall be as binding as if required by all.

M. Pursuant to NMSA 1978, section 13-1-191, reference is hereby made to the Criminal Laws of New Mexico (including NMSA 1978, sections 30-14-1, 30-24-2, and 30-41-1 through 30-41-3) which prohibit

bribes, kickbacks, and gratuities, violation of which constitutes a felony. Further, the Procurement Code (NMSA 1978, sections 13-1-28 through 13-1-199) imposes civil and criminal penalties for its violation.

N. Pursuant to NMSA 1978, section 13-4-11. Reference is hereby made to the Minimum Wage on Public Works; weekly payments; posting wage scale; withholding funds.

IN WITNESS WHEREOF, the Parties have executed this Contract as of the date of the signature by the required approval authorities below.

CITY OF SANTA FE:

_____
ALAN WEBBER, MAYOR

DATE: _____

CONTRACTOR:

Neil Hurd
_____
NEIL HURD, OWNER

DATE: Dec 1, 2025

NMBTIN#: _____

ATTEST:

_____
CITY CLERK

CITY ATTORNEY'S OFFICE:

Kevin L. Nault
Kevin L. Nault (Dec 2, 2025 15:44:38 MST)
ASSISTANT CITY ATTORNEY

APPROVED FOR FINANCES:

Emily K. Oster
FINANCE DIRECTOR

CERTIFICATE OF LIABILITY INSURANCE

DATE (MM/DD/YYYY): 05/27/2025

THIS CERTIFICATE IS ISSUED AS A MATTER OF INFORMATION ONLY AND CONFERS NO RIGHTS UPON THE CERTIFICATE HOLDER. THIS CERTIFICATE DOES NOT AFFIRMATIVELY OR NEGATIVELY AMEND, EXTEND OR ALTER THE COVERAGE AFFORDED BY THE POLICIES BELOW. THIS CERTIFICATE OF INSURANCE DOES NOT CONSTITUTE A CONTRACT BETWEEN THE ISSUING INSURER(S), AUTHORIZED REPRESENTATIVE OR PRODUCER, AND THE CERTIFICATE HOLDER.

IMPORTANT: If the certificate holder is an ADDITIONAL INSURED, the policy(ies) must have ADDITIONAL INSURED provisions or be endorsed. If SUBROGATION IS WAIVED, subject to the terms and conditions of the policy, certain policies may require an endorsement. A statement on this certificate does not confer rights to the certificate holder in lieu of such endorsement(s).

PRODUCER	CONTACT NAME: Dianne Dawkins	
RSC Insurance Brokerage, Inc. 1690 S Telshor Blvd. Las Cruces NM 88011	PHONE (A/C, No, Ext): (575) 888-3413	FAX (A/C, No):
	E-MAIL ADDRESS: ddawkins@risk-strategies.com	
	INSURER(S) AFFORDING COVERAGE	NAIC #
	INSURER A : Cincinnati Insurance Company	10677
INSURED HEI, Inc. 3800 Vassar, NE PO Box 31310 Albuquerque NM 87190-1310	INSURER B : Builders Trust of New Mexico	525190
	INSURER C :	
	INSURER D :	
	INSURER E :	
	INSURER F :	

COVERAGES **CERTIFICATE NUMBER:** 2025-2026 Liability **REVISION NUMBER:**

THIS IS TO CERTIFY THAT THE POLICIES OF INSURANCE LISTED BELOW HAVE BEEN ISSUED TO THE INSURED NAMED ABOVE FOR THE POLICY PERIOD INDICATED. NOTWITHSTANDING ANY REQUIREMENT, TERM OR CONDITION OF ANY CONTRACT OR OTHER DOCUMENT WITH RESPECT TO WHICH THIS CERTIFICATE MAY BE ISSUED OR MAY PERTAIN, THE INSURANCE AFFORDED BY THE POLICIES DESCRIBED HEREIN IS SUBJECT TO ALL THE TERMS, EXCLUSIONS AND CONDITIONS OF SUCH POLICIES. LIMITS SHOWN MAY HAVE BEEN REDUCED BY PAID CLAIMS.

INSR LTR	TYPE OF INSURANCE	ADDL INSD	SUBR WVD	POLICY NUMBER	POLICY EFF (MM/DD/YYYY)	POLICY EXP (MM/DD/YYYY)	LIMITS	
A	[X] COMMERCIAL GENERAL LIABILITY [ ] CLAIMS-MADE [X] OCCUR GEN'L AGGREGATE LIMIT APPLIES PER: [ ] POLICY [X] PRO-JECT [ ] LOC [ ] OTHER:	Y	Y	EPP 0087604	06/01/2025	06/01/2026	EACH OCCURRENCE DAMAGE TO RENTED PREMISES (Ea occurrence) MED EXP (Any one person) PERSONAL & ADV INJURY GENERAL AGGREGATE PRODUCTS - COMP/OP AGG	$ 1,000,000 $ 500,000 $ 10,000 $ 1,000,000 $ 2,000,000 $ 2,000,000
A	AUTOMOBILE LIABILITY [X] ANY AUTO [ ] OWNED AUTOS ONLY [ ] SCHEDULED AUTOS [X] HIRED AUTOS ONLY [X] NON-OWNED AUTOS ONLY	Y	Y	EPP 0087604	06/01/2025	06/01/2026	COMBINED SINGLE LIMIT (Ea accident) BODILY INJURY (Per person) BODILY INJURY (Per accident) PROPERTY DAMAGE (Per accident) Hired Non-Owned	$ 1,000,000 $ $ $ $ 1,000,000
	[X] UMBRELLA LIAB [X] OCCUR [ ] EXCESS LIAB [ ] CLAIMS-MADE [ ] DED [ ] RETENTION $ 0			EPP 0087604	06/01/2025	06/01/2026	EACH OCCURRENCE AGGREGATE	$ 5,000,000 $ 5,000,000
B	WORKERS COMPENSATION AND EMPLOYERS' LIABILITY ANY PROPRIETOR/PARTNER/EXECUTIVE OFFICER/MEMBER EXCLUDED? (Mandatory in NH) Y / N: Y If yes, describe under DESCRIPTION OF OPERATIONS below	N / A	Y	WC100-0005961-2025A	01/01/2025	01/01/2026	[X] PER STATUTE [ ] OTH-ER E.L. EACH ACCIDENT E.L. DISEASE - EA EMPLOYEE E.L. DISEASE - POLICY LIMIT	 $ 2000000 $ 2000000 $ 2000000
A	Installation Floater			EPP 0087604	06/01/2025	06/01/2026	Jobsite Limit Temporary Storage Deductible	$100,000 $100,000 $1,000

DESCRIPTION OF OPERATIONS / LOCATIONS / VEHICLES (ACORD 101, Additional Remarks Schedule, may be attached if more space is required)

Project: All Jobs

CERTIFICATE HOLDER

City of Santa Fe
1600 St. Michaels Dr.
Santa Fe NM 87505

CANCELLATION

SHOULD ANY OF THE ABOVE DESCRIBED POLICIES BE CANCELLED BEFORE THE EXPIRATION DATE THEREOF, NOTICE WILL BE DELIVERED IN ACCORDANCE WITH THE POLICY PROVISIONS.

AUTHORIZED REPRESENTATIVE

RSC Insurance Brokerage Inc

© 1988-2015 ACORD CORPORATION. All rights reserved.

CITY OF SANTA FE

The Purchasing Memo

Date: November 24, 2025

To: Governing Body, Finance Committee, and Public Works & Utilities Committee

From: Brian Moya, Fire Chief BRIAN MOYA

Via: Brian Moya, Fire Chief BM

Subject: Systems Design West, LLC Amendment No. 1

Vendor Name: Systems Design West, LLC

Munis Vendor Number: 10373

ITEM AND ISSUE:

Fire Department respectfully requests your review and approval of a Amendment #1 to 3250025 with Systems Design West, LLC for Ambulance Services Billing. Amendment 1increased the amount of compensation. The annual cost for service would amount to approximately $329,000.00 including New Mexico gross receipts tax for a total compensation of for the remainder of this contract would be $849,919.00 for a term of four years.

CONTRACT NUMBER:

The FY25 Munis contract number is 3250025.

BACKGROUND AND SUMMARY:

The Fire Department operates all the 911 ambulance services for the City of Santa Fe. As an operator of ambulance services, the New Mexico Public Regulatory Commission grants us the authority to bill for patient transports. With a high volume of billable 911 calls (14,000) which generates a revenue for the City of about $2,000,000 annually.

Systems Design West, our billing contractor, is requesting rate increase of one dollar ($1.00) per billed transport. The current rate is $22.50/transport and would increase to $23.50/transport. The rate increase would cost the Fire Department approximately $14,000/year. The annual cost for service would amount to approximately $329,000.00. The total for the remainder of this contract would be $849,919.00.

This rate increase is acceptable to Fire Department administration. We are requesting approval for the remainder of the current contract.

PRIOR APPROVALS AND SUPPORTING INFORMATION:

FUNDING SOURCE:

Fund Name/Number: General Fund/Fund 100

Munis Org Name/Number: Fire Administration / 1002001

Munis Object Name/Number: Professional Contracts / 510300

Budget Officer / Designee: Andy Hopkins **Date:** 11/25/2025

Budget Officer Comment/Exceptions: _____

PROCUREMENT METHOD:

The procurement method used was NMSA 1978, Section 13-1-98, Exempt

This determination is based on the operation of a common health care service.

Chief Procurement Officer (CPO)/Designee: _____ **Date:** 11/26/2025

CPO Comment/Exceptions: _____

ASSOCIATED APPROVALS:

IT Components included? ☐ Yes | ☒ No

Approval: NA **Title:** _____ **Date:** _____

Comment/Exceptions: _____

Treasury/Point of Sale Components included? ☐ Yes | ☒ No

Approval: NA **Title:** _____ **Date:** _____

Comment/Exceptions: _____

Vehicles included? ☐ Yes | ☒ No

Approval: NA **Title:** _____ **Date:** _____

Comment/Exceptions: _____

Construction to City Facilities, Furniture, and/or Fixtures included? ☐ Yes | ☒ No

Approval: NA **Title:** _____ **Date:** _____

Comment/Exceptions: _____

Is this an externally funded purchase? ☐ Yes | ☒ No

If yes, what is the issuing agency: _____

Approval: NA **Title:** _____ **Date:** _____

Comment/Exceptions: _____

Is this a Capital Asset or Project? ☐ Yes | ☒ No

Project Ledger Number: NA

Approval: NA **Title:** _____ **Date:** _____

Comment/Exceptions: _____

ATTACHMENTS:
Original Contract #24-0487
CPO Service Determination Email
Procurement document: Exemption Determination/Email
Vendor's Quote
Certificate of Liability Insurance (COI)
Amendment No. 1 to Professional Services Contract 3250025

Outlook

RE: Completed: You're copied on "Contract_Amendment 1_SDW"

From DUTTON-LEYDA, TRAVIS K. <tkduttonleyda@santafenm.gov>
Date Wed 10/22/2025 3:05 PM
To JOHNSON, STEN A. <sajohnson@santafenm.gov>
Cc Fire Administration <fireadmin@santafenm.gov>; CANDELARIA MARTINEZ, TONIETTE O. <tocandelariamartinez@santafenm.gov>

Sten, it's exempt.

Thank you.

Regards,

Travis Dutton-Leyda
Chief Procurement Officer
City of Santa Fe
200 Lincoln Avenue
Santa Fe, NM 87501
505-629-8351
tkduttonleyda@santafenm.gov

Book time to meet with me

https://santafenm.gov/finance-2/purchasing-1

Vendor Registration Sites and Current Procurement Opportunities:

[Current for Finances Only] https://santafenm.munisselfservice.com/vss/

[We Are Live With OpenGov] https://procurement.opengov.com/portal/santafenm

[Current] https://www.withpavilion.com/

Internal Link: https://intranet.santafenm.gov/central_purchasing_division_cpd

CITY OF SANTA FE
FINANCE

"A journey of a thousand miles begins with a single step" ~ Lao Tzu

From: JOHNSON, STEN A. <sajohnson@santafenm.gov>
Sent: Wednesday, October 22, 2025 2:49 PM
To: DUTTON-LEYDA, TRAVIS K. <tkduttonleyda@santafenm.gov>; CANDELARIA MARTINEZ, TONIETTE O.

<tocandelariamartinez@santafenm.gov>
Cc: Fire Administration <fireadmin@santafenm.gov>
Subject: FW: Completed: You're copied on "Contract_Amendment 1_SDW"

Hi Travis,
Trying to guess our procurement vehicle has me stuck between two. Would this be a continuation of the original determination…exempt or would it be an existing contract?

Toniette,
Also attached is a memo, 99% complete for the packet.

Thank you both,

Sten A Johnson
Assistant Chief – Support Services
City of Santa Fe Fire Department
200 Murales Rd.
Santa Fe, New Mexico 87501
505-467-9799

From: JOHNSON, STEN A.
Sent: Friday, October 17, 2025 4:35 PM
To: DUTTON-LEYDA, TRAVIS K. <tkduttonleyda@santafenm.gov>
Cc: CANDELARIA MARTINEZ, TONIETTE O. <tocandelariamartinez@santafenm.gov>
Subject: FW: Completed: You're copied on "Contract_Amendment 1_SDW"

Forgot the Amendment.
Thank you

Sten A Johnson
Assistant Chief – Support Services
City of Santa Fe Fire Department
200 Murales Rd.
Santa Fe, New Mexico 87501
505-467-9799

From: JOHNSON, STEN A.
Sent: Friday, October 17, 2025 4:21 PM
To: DUTTON-LEYDA, TRAVIS K. <tkduttonleyda@santafenm.gov>
Cc: CANDELARIA MARTINEZ, TONIETTE O. <tocandelariamartinez@santafenm.gov>
Subject: FW: Completed: You're copied on "Contract_Amendment 1_SDW"

Hi Travis,

This is amendment is for a rate increase on our ambulance billing contract.
The increase amounts to $14,000/yr. $34,000 for the remainder of the contract.
Total amount of the contract will be $850,000 for the remainder of the term, 1/1/26 – 8/1/28.
What will our procurement vehicle be?

Sten A Johnson
Assistant Chief – Support Services
City of Santa Fe Fire Department
200 Murales Rd.
Santa Fe, New Mexico 87501
505-467-9799

From: CANDELARIA MARTINEZ, TONIETTE O. <tocandelariamartinez@santafenm.gov>
Sent: Friday, October 17, 2025 4:10 PM
To: JOHNSON, STEN A. <sajohnson@santafenm.gov>
Subject: Fw: Completed: You're copied on "Contract_Amendment 1_SDW"

Attached is the General Services Contract #24-0487 - Systema Design West, LLC. Took me a while to download a copy. Munis is acting up.

From: CANDELARIA MARTINEZ, TONIETTE O. <tocandelariamartinez@santafenm.gov>
Sent: Tuesday, October 14, 2025 9:29 AM
To: JOHNSON, STEN A. <sajohnson@santafenm.gov>
Subject: Re: Completed: You're copied on "Contract_Amendment 1_SDW"

Morning Chief Johnson,
Can you please prepare the Purchase Memo and I also need a copy of the original SDW Contract. I'll then upload to OpenGov and request Emily's signature. Once I have Emily's signature I can add it as an Item on the agenda for Committee Review.

Thanks for your help with this 🙂

Toniette Candelaria Martinez

Fiscal Administrator

505-955-3109
200 Murales Road
Santa Fe, NM 87501
www.santafenm.gov/fire-department

From: JOHNSON, STEN A. <sajohnson@santafenm.gov>
Sent: Tuesday, October 14, 2025 9:24 AM
To: HARDING, MATTHEW R. <mrharding@santafenm.gov>; Jennifer Braus <jennb@sdwems.com>
Cc: CANDELARIA MARTINEZ, TONIETTE O. <tocandelariamartinez@santafenm.gov>
Subject: RE: Completed: You're copied on "Contract_Amendment 1_SDW"

Thank you, Matthew, for Legal's review and approval.

Jenn We will now prepare it to go for committee approval.

Sten A Johnson

Assistant Chief – Support Services

City of Santa Fe Fire Department

200 Murales Rd.

Santa Fe, New Mexico 87501

505-467-9799

Item #: _____
Munis Contract #: 3250025
Original Contract Item #: _____
SWPA/GSA/Coop/RFP/ITB #: _____

CITY OF SANTA FE, FIRE DEPARTMENT
AMENDMENT No. 1 TO
Contract # 3250025

AMBULANCE SERVICES BILLING

This AMENDMENT No. _1_ (the "Amendment") amends the CITY OF SANTA FE CONTRACT, dated _August 1, 2024__(the "Contract"), between the City of Santa Fe (the "City") and _Systems Design West, LLC_. (the "Contractor"). The date of this Amendment shall be the date when it is executed by the City and the Contractor whichever occurs last.

RECITALS:

A. Under the terms of the Contract, Contractor has agreed to provide ambulance services billing.

B. Pursuant to Article 8 of the Contract, and for good and valuable consideration, the receipt and sufficiency of which are acknowledged by the parties, the City and the Contractor agree as follows:

3. COMPENSATION.

Article 3, paragraph A reads in its entirety as follows:

A. The City shall pay to the Contractor based upon fixed prices for each Deliverable item as listed here.

Deliverable item:	U/I (unit of issue)	Price
01	per transport	$23.50

The total compensation under this Contract shall not exceed $300,000.00 for year one, including New Mexico gross receipts tax. Subsequent years will be based on the available budget.

CONTRACT IN FULL FORCE.

Except as specifically provided in this Amendment, the Contract remains and shall remain in full force and effect, in accordance with its terms.

IN WITNESS WHEREOF, the parties have executed this Amendment No. __ to the Contract as of the dates set forth below.

CITY OF SANTA FE:

_____
ALAN WEBBER, MAYOR

DATE:_____

CONTRACTOR:
SYSTEMS DESIGN WEST, LLC.

Jennifer Braus
Jennifer Braus (Oct 10, 2025 11:22:16 PDT)
_____
JENN BRAUS, CEO

DATE: Oct 10, 2025
NMBTIN: _____

ATTEST:

_____
CITY CLERK

CITY ATTORNEY'S OFFICE:

_____
ASSISTANT CITY ATTORNEY

APPROVED FOR FINANCES:

Emily K. Oster
_____
FINANCE DIRECTOR

Item #: 24-0487
Munis Contract #: 3250025

CITY OF SANTA FE
GENERAL SERVICES CONTRACT

Goods and Services

THIS CONTRACT is made and entered into by and between the City of Santa Fe, herein after referred to as the "City," and **Systems Design West, LLC.** herein after referred to as the "Contractor."

IT IS MUTUALLY AGREED BETWEEN THE PARTIES:

1. **Definitions**

A. "Products and Services Schedule" refers to the complete list of products and services offered under this Contract and the price for each. Product and service descriptions may be amended with the prior approval of the Contract Administrator. New products and services shall not be added to the Products and Services Schedule.

B. "Business Hours" means 8:00 a.m. to 5:00 p.m. Pacific Time.

2. **Scope of Work**

A. The Contractor shall perform the following work:

The City, with assistance from the Contractor, shall apply for Provider Status or updated Status with Medicare, Medicaid, and all public and private insurances which will be billed as a part of this Scope of Services. The City is responsible for informing the Contractor of any subsequent changes that necessitate updates (e.g. changing an Authorized Official) so that the Contractor may complete its duties. The City shall assist the Contractor to obtain the necessary certifications, numbers and documentation needed for the Contractor to provide the services identified in sections 1.2 and 1.3 below, obtain and maintain credentials for payer websites that require vendor access to be given only through a Provider representative and facilitate access for the Contractor's representatives. The City agrees to furnish and assist the Contractor with the following:

(a) The City agrees to provide a complete and legible "PCR" (Patient Care Report) to the Contractor including patient name, address and pertinent billing and insurance information from the field, including a copy of the patient signature for authorization of benefits and responsibility for payment, authorizing billing of Medicare, Medicaid and any insurance the patient is a subscriber to. The original patient signature must be maintained by the City and made available to the Contractor and/or insurance payers upon request. The amounts to be billed are determined by the New Mexico Public Regulation Commission Transportation Division, and are set forth in section 3.B Compensation. Any subsequent increases to established fees must be communicated to the Contractor, in writing, prior to the submission of affected PCRs. PCRs must be sent using a NEMSIS compliant XML format, or an additional fee may be charged.

(b) The City agrees to furnish the Contractor with hospital ER forms (face/admit sheets) with demographic and insurance information attached to the PCR if requested by Contractor. Copies of any payments made directly to the City will be forwarded to the Contractor for accounting purposes in a timely manner. The City agrees to generate any refund checks due to overpayments identified by the Contractor directly to the payer to which the

refund is due, based on detailed information provided by the Contractor. The City shall provide additional information as may be required by insurance companies or other agencies in order to facilitate the Contractor's obligations to the City.

(c) Fees for ambulance transportation, emergency, life support and related services are charged according to the New Mexico Public Regulation Commission as described in section 3.B Compensation. The collection by the City of unpaid accounts is at the City's discretion, as controlled by applicable laws and regulations, and the removal of uncollectable accounts from the list of accounts receivable is as controlled by Section 3-37-7, NMSA 1978, Determination of Uncollectable Account; Removal from Accounts Receivable, attached as Exhibit A. The City agrees to inform Contractor of any subsequent changes to these documents in writing in advance of when the new policies, procedures and/or rates take effect.

(d) The City agrees to complete registration with Contractor's vendors as applicable for Contractor to be able to fulfill its obligations to the City. Such vendors may include e-payment and merchant services portal, remote deposit capture services, and clearinghouse registration.

1.2 Upon receipt of the PCRs from the City, the Contractor shall: set up a patient account in Contractor's proprietary software application and create a patient record; perform claim submissions, including follow up statements and any necessary rebilling of EMS patient transport services provided by the City to the subscriber's medical insurances, Medicare, Medicaid and any and all known secondary insurance providers; produce and forward CMS 1500 forms and/or electronic medical claims; produce and mail an initial invoice and subsequent statements to all private patient accounts on behalf of the City; file any applicable appeals to insurance payers and/or Medicare and Medicaid on behalf of the patient if necessary to pursue the claim. The City shall maintain a system to reconcile the number of PCRs sent to the Contractor monthly.

1.3 The Contractor shall: receive at its facilities all payments (except those directly deposited into the City's account by insurances and Medicare/Medicaid via EFT) Explanations of Benefits and Electronic Remittance Advices; account for all payments; deposit all funds directly into the City's "deposit only" account; forward deposit information to the City within 24 hours of such deposit; initiate and forward refund information and adjustments made on behalf of the patient's account to the City. The Contractor shall provide to the City a minimum of four (4) standard reports each month including: a) Aged Accounts Receivable b) Month End Summary c) Annual Collection Statistics d) Transaction Journal. These reports will include information related to amounts billed, amounts collected and uncollected, insurance and Medicare/Medicaid allowable and disallowable. For payments and remittances that are wholly electronic portal-based, the City shall grant access to Contractor's representatives as needed for various payer portals.

1.4 The Contractor shall provide live customer service to the City's patients via toll free phone numbers to answer patient billing questions Monday through Friday from 8:00am through 6:00 pm, Pacific Standard Time (except Federal holidays).

1.5 The Contractor shall provide all labor, materials and equipment necessary to perform the work specified in the above scope of services. The Contractor is responsible for ensuring any subcontractor or vendor agencies are fully licensed and qualified to perform such work. For subcontracted payment processing and merchant services, Contractor is responsible for ensuring subcontractor or vendor maintains PCI compliance, and that the vendor or Contractor must be able to provide a PCI compliance certificate to the City annually, at most.

1.6 Additional services: Additional services not specified in this Scope of Services (e.g. transferred accounts, non-routine auditing, targeted trainings, paper PCRs) may be added for an additional fee agreed upon in writing.

1.7 Parties acknowledge that despite best efforts, billing errors may occur from time to time. Each party will promptly notify the other party of the discovery of a billing error unless the error is found by the Contractor and corrected without consequence to the City. Contractor's sole obligation in the event of a billing error will be to correct the error, at no cost to the City, by making the appropriate changes to the information in its system, posting a refund if appropriate, and rebilling the underlying claim if permissible.

1.8 The Contractor will ensure all applicable data transferred from the prior ambulance billing vendor, EF Recovery, is secured within Systems Design West database. This will be accomplished no more than thirty (30) days from the initiation of this contract. If transfer is necessary in the future, the Contractor agrees to transfer City related data to the newly selected vendor.

3. **Compensation**

A. The City shall pay to the Contractor based upon fixed prices for each Deliverable item as listed here.

Deliverable item:	U/I (unit of issue)	Price
01	per transport	$22.50

The total compensation under this Contract shall not exceed $300,000.00 for year one, including New Mexico gross receipts tax. Subsequent years will be based on the available budget.

B. Ambulance billing will follow the established New Mexico Public Regulation Commission tariff.

16-00031TRR
New Mexico Public Regulation Commission Transportation Division
Statewide Ambulance Tariff Effective February 1, 2017
THE AMBULANCE PROVIDER MAY SEEK TO OBTAIN WRITTEN CONSENT FOR TREATMENT/SERVICES FROM THE PATIENT PRIOR TO TREATMENT/SERVICES

SERVICE RENDERED RATE
BASIC LIFE SUPPORT (BLS) NON-EMERGENCY
Applies when non-emergency BLS transportation, assessment or intervention is provided by licensed Emergency Medical Technicians.

Assessment or intervention, with or without $355.00 transport:
Per patient mile: $12.75

BASIC LIFE SUPPORT (BLS) EMERGENCY
Applies when emergency (immediate response made to 911 or equivalent call) BLS transportation, intervention, or assessment is provided by licensed Emergency Medical Technician.

Assessment or intervention, with $512.00
or without transport:
Per patient mile: $12.75

ADVANCED LIFE SUPPORT LEVEL 1 (ALS1) NON- EMERGENCY
Applies when non-emergency ALS assessment or at least one ALS intervention is provided by licensed EMT-Intermediate or an EMT- Paramedic.

Assessment or intervention, with or without transport to a treatment facility: $385.00
Per patient mile: $12.75

ADVANCED LIFE SUPPORT LEVEL 1 (ALS1) EMERGENCY
Applies when emergency (immediate response to a 911 or equivalent call) ALS assessment or at least one ALS intervention is provided by a licensed EMT- Intermediate
or a licensed EMT- Paramedic.

Assessment or intervention, with or without transport: $607.00
Per patient mile: $12.75

ADVANCED LIFE SUPPORT LEVEL 2 (ALS2) EMERGENCY
Applies when as a result of emergency1 at least three different
ALS medications by intravenous push/bolus or by continuous infusion2 are administered or; when the same ALS medication is administered three times or; when one or more of the following ALS procedures
are provided: manual defibrillation/cardioversion, endotracheal intubation, central venous line, pacing, chest decompression, surgical airway, advanced invasive airway, or intraosseous access.

Medication administration or provision of procedure, with or without transport: $878.00
Per patient mile: $12.75

SPECIALTY CARE TRANSPORT (SCT)
Applies when a level of inter-facility transportation of a critically injured or ill patient at a level of service beyond the scope of practice for Emergency Medical Technician - Intermediates or
Emergency Medical Technician - Paramedics, is provided.

Transport: $975.00
Per patient mile: $12.75

PATIENT EVALUATION (EMERGENCY RESPONSE WITHOUT TRANSPORT)
Applies when emergency services (immediate response made to a 911 or equivalent call) are provided by certified Emergency Medical First Responder with no transport.
Charge: $136.00

DEDICATED STAND-BY CHARGES (PER AMBULANCE AND TWO PERSONNEL-WITHOUT TRANSPORT)
Applies when emergency medical service is provided for an event such as a football game or county fair where the potential for illness or injury exists.
First Hour or any portion thereof: $145.00
Second Whole Hour and any whole hour thereafter: $108.00

Fifteen (15) minute increments after first hour: $27.00

4. **Payment Provisions**

All payments under this Contract are subject to the following provisions.

A. Acceptance - In accordance with NMSA 1978, Section 13-1-158 the City shall determine if the product or services provided meet specifications. Until the products or services have been accepted in writing by the City, the City shall not pay for any products or services. Unless otherwise agreed upon between the City and the Contractor, within thirty (30) days from the date the City receives written notice from the Contractor that payment is requested for services or within thirty (30) days from the receipt of products, the City shall issue a written certification (by letter or email) of complete or partial acceptance or rejection of the products or services. Unless the City gives notice of rejection within the specified period, the products or services will be deemed to have been accepted.

B. Payment of Invoice - Upon acceptance that the products or services have been received and accepted, payment shall be tendered to the Contractor within thirty (30) days after the date of certification. Contractor may submit invoices for payment no more frequently than monthly. Payment will be made to the Contractor's designated mailing address. Payment on each invoice shall be due within 30 days from the date of the acceptance of the invoice. The City agrees to pay in full the balance shown on each account's statement, by the due date shown on said statement.

5. **Term**

THIS CONTRACT SHALL NOT BECOME EFFECTIVE UNTIL APPROVED IN WRITING BY THE CITY. This contract shall terminate four (4) years from the date of final signature.

6. **Default and Force Majeure**

The City reserves the right to cancel all, or any part of any orders placed under this contract without cost to the City, if the Contractor fails to meet the provisions of this contract and, except as otherwise provided herein, to hold the Contractor liable for any excess cost occasioned by the City due to the Contractor's default. The Contractor shall not be liable for any excess costs if failure to perform the order arises out of causes beyond the control and without the fault or negligence of the Contractor; such causes include, but are not restricted to, acts of God or the public enemy, acts of the State or Federal Government, fires, floods, epidemics, quarantine restrictions, strikes, freight embargoes, unusually severe weather and defaults of sub-contractors due to any of the above, unless the City shall determine that the supplies or services to be furnished by the sub-contractor were obtainable from other sources in sufficient time to permit the Contractor to meet the required delivery scheduled. The rights and remedies of the City provided in this paragraph shall not be exclusive and are in addition to any other rights now being provided by law or under this contract.

7. **Termination**

A. Grounds. The City may terminate this Contract for convenience or cause. For contracts within their authority, the City Manager or their designee is authorized to provide the notice of termination, otherwise such notice of termination shall be provided by the Mayor, or their designee as authorized by the Governing Body. The Contractor may only terminate this Contract based upon the City's uncured, material breach of this Contract.

B. Notice: City Opportunity to Cure.

1) The City shall give the Contractor written notice of termination at least sixty (60) days prior to the intended date of termination.

2) Contractor shall give City written notice of termination at least thirty (30) days prior to the intended date of termination, which notice shall (i) identify all the City's material breaches of this Contract upon which the termination is based and (ii) state what the City must do to cure such material breaches. Contractor's notice of termination shall only be effective (i) if the City does not cure all material breaches within the thirty (30) day notice period or (ii) in the case of material breaches that cannot be cured within thirty (30) days, the City does not, within the thirty (30) day notice period, notify the Contractor of its intent to cure and begin with due diligence to cure the material breach.

3) Notwithstanding the foregoing, this Contract may be terminated immediately upon written notice to the Contractor (i) if the Contractor becomes unable to perform the services contracted for, as determined by the City; (ii) if, during the term of this Contract, the Contractor is suspended or debarred by the City; or (iii) the Contract is terminated pursuant to Paragraph 17, "Appropriations", of this Contract.

Liability. Except as otherwise expressly allowed or provided under this Contract, the City's sole liability upon termination shall be to pay for acceptable work performed prior to the Contractor's receipt or issuance of a notice of termination; provided, however, that a notice of termination shall not nullify or otherwise affect either party's liability for pre-termination defaults under or breaches of this Contract. The Contractor shall submit an invoice for such work within thirty (30) days of receiving or sending the notice of termination.

THIS PROVISION IS NOT EXCLUSIVE AND DOES NOT WAIVE THE CITY'S OTHER LEGAL RIGHTS AND REMEDIES CAUSED BY THE CONTRACTOR'S DEFAULT/BREACH OF THIS CONTRACT.

8. **Amendment**

A. This Contract shall not be altered, changed, or amended except by instrument in writing executed by the parties hereto and all other required signatories.

B. If the City proposes an amendment to the Contract to unilaterally reduce funding due to budget or other considerations, the Contractor shall, within thirty (30) days of receipt of the proposed Amendment, have the option to terminate the Contract, pursuant to the termination provisions as set forth in Paragraph 7 herein, or to agree to the reduced funding.

9. **Status of Contractor**

The Contractor, and Contractor's agents and employees, are independent Contractors for the City and are not employees of the City. The Contractor, and Contractor's agents and employees, shall not accrue leave, retirement, insurance, bonding, use of City vehicles, or any other benefits afforded to employees of the City because of this Contract. The Contractor acknowledges that all sums received hereunder are personally reportable by the Contractor for income tax purposes, including without limitation, self-employment tax and business income tax. The Contractor agrees not to purport to bind the City unless the Contractor has written authority to do so, and then only within the strict limits of that authority.

10. **Assignment**

The Contractor shall not assign or transfer any interest in this Contract or assign any claims for money due or to become due under this Contract without the prior written approval of the City.

11. **Subcontracting**

The Contractor shall not subcontract any portion of the services to be performed under this Contract without the prior written approval of the City. No such subcontract shall relieve the primary Contractor from its obligations and liabilities under this Contract, nor shall any subcontract obligate direct payment from the City.

12. **Non-Collusion**

In signing this Contract, the Contractor certifies the Contractor has not, either directly or indirectly, entered into action in restraint of free competitive bidding in connection with this offer submitted to the City.

13. **Inspection of Plant**

The City may inspect, at any reasonable time during Contractor's regular business hours and upon prior written notice, the Contractor's plant or place of business, or any subcontractor's plant or place of business, which is related to the performance of this contract.

14. **Commercial Warranty**

The Contractor agrees that the tangible personal property or services furnished under this Contract shall be covered by the most favorable commercial warranties the Contractor gives to any customer for such tangible personal property or services, and that the rights and remedies provided herein shall extend to the City and are in addition to and do not limit any rights afforded to the City by any other clause of this order. The contractor agrees not to disclaim warranties of fitness for a particular purpose or merchantability.

15. **Condition of Proposed Items**

Where tangible personal property is a part of this Contract, all proposed items are to be NEW and of most current production, unless otherwise specified.

16. **Records and Audit**

During the term of this Contract and for three years thereafter, the Contractor shall maintain detailed records pertaining to the services rendered and products delivered. These records shall be subject to inspection by the City, the State Auditor and other appropriate state and federal authorities. The City shall have the right to audit billings both before and after payment. Payment under this Contract shall not foreclose the right of the City to recover excessive or illegal payments.

17. **Appropriations**

The terms of this Contract, and any orders placed under it, are contingent upon sufficient appropriations and authorization being made by the Governing Body for the performance of this Contract. If sufficient appropriations and authorization are not made by the legislature, this Contract, and any orders placed under it, shall terminate upon written notice being given by the City to the Contractor. The City's decision as to whether sufficient appropriations are available shall be accepted by the Contractor and shall be final. If the City proposes an amendment to the Contract to unilaterally reduce funding, the Contractor shall have the option to terminate the Contract or to agree to the reduced funding, within thirty (30) days of receipt of the proposed amendment.

18. **Release**

The Contractor, upon final payment of the amount due under this Contract, releases the City, its officers, and employees, from all liabilities, claims and obligations whatsoever arising from or under this Contract. The Contractor agrees not to purport to bind the City, unless the Contractor has express written authority to do so, and then only within the strict limits of that authority.

19. **Confidentiality**

Any confidential information provided to or developed by the Contractor in the performance of this Contract shall be kept confidential and shall not be made available to any individual or organization by the Contractor without prior written approval by the City.

20. **Conflict of Interest**

A. The Contractor represents and warrants that it presently has no interest and, during the term of this Contract, shall not acquire any interest, direct or indirect, which would conflict in any manner or degree with the performance or services required under the Contract. The Contractor shall comply with any applicable provisions of the New Mexico Governmental Conduct Act and the New Mexico Financial Disclosures Act.

B. The Contractor further represents and warrants that it has complied with, and, during the term of this Contract, will continue to comply with, and that this Contract complies with all applicable provisions of the Governmental Conduct Act, Chapter 10, Article 16 NMSA 1978.

C. Contractor's representations and warranties in Paragraphs A and B of this Paragraph are material representations of fact upon which the City relied when this Contract was entered into by the parties. Contractor shall provide immediate written notice to the City if, at any time during the term of this Contract, Contractor learns that Contractor's representations and warranties in Paragraphs A and B of this Paragraph 20 were erroneous on the effective date of this Contract or have become erroneous by reason of new or changed circumstances. If it is later determined that Contractor's representations and warranties in Paragraphs A and B of this Paragraph 20 were erroneous on the effective date of this Contract or have become erroneous by reason of new or changed circumstances, in addition to other remedies available to the City and notwithstanding anything in the Contract to the contrary, the City may immediately terminate the Contract.

D. All terms defined in the Governmental Conduct Act have the same meaning in this section.

21. **Approval of Contractor Representative(s)**

The City reserves the right to require a change in Contractor representative(s) if the assigned representative(s) are not, in the opinion of the City, adequately serving the needs of the City.

22. **Scope of Contract; Merger**

This Contract incorporates all the Agreements, covenants and understandings between the parties hereto concerning the subject matter hereof, and all such covenants, agreements, and understandings have been merged into this written contract.

It is determined this agreement meets the criteria for exemption, per NMSA 1978, Section 13-1-98.1(B). This determination is based on the operation of a common health care service, which satisfies the following key criteria:

A. Reduces Health Care Costs: While ambulance transport rates are regulated by the Public Regulation Commission, the revenue generated from ambulance billing enables the City to maintain adequate emergency response resources, thereby avoiding potentially higher costs associated with delayed response times or insufficient coverage.

B. Improves Quality of Care: The arrangement ensures the City can staff every ambulance with trained paramedics and maintain a sufficient number of emergency response vehicles on the street. This improves the quality of pre-hospital emergency care provided to Santa Fe residents.

C. Improves Access to Care: Ambulance billing revenue allows the City to fund appropriate levels of emergency medical staffing, supplies, and apparatus. Without this funding source, the Fire Department's ability to respond to emergency medical calls and provide timely access to emergency care for citizens would be diminished.

23. **Notice**

The Procurement Code, NMSA 1978, Sections 13-1-28 through 13-1-199, imposes civil and criminal penalties for its violation. In addition, the New Mexico criminal statutes impose felony penalties for bribes, gratuities, and kickbacks.

24. **Equal Opportunity Compliance**

The Contractor agrees to abide by all federal and state laws, and local Ordinances, pertaining to equal employment opportunity. In accordance with all such laws, rules, and regulations, the Contractor agrees to assure that no person in the United States shall on the grounds of race, religion, color, national origin, ancestry, sex, age, physical or mental handicap, or serious medical condition, spousal affiliation, sexual orientation or gender identity, be excluded from employment with or participation in, be denied the benefits of, or be otherwise subjected to discrimination under any program or activity performed under this Contract. If Contractor is found not to be in compliance with these requirements during the life of this Contract, Contractor agrees to take appropriate steps to correct these deficiencies.

25. **Indemnification**

The Contractor shall hold the City and its employees harmless and shall indemnify the City and its employees against any and all claims, suits, actions, liabilities and costs of any kind, including attorney's fees for personal injury or damage to property arising from the acts or omissions of the Contractor, its agents, officers, employees or subcontractors. The Contractor shall not be liable for any claim, injury or damage as a result of any negligent act or omission committed by the City, its officers or employees.

26. **New Mexico Tort Claims Act**

Any liability incurred by the City of Santa Fe in connection with this Contract is subject to the immunities and limitations of the New Mexico Tort Claims Act, Section 41-4-1, et. seq. NMSA 1978, as amended. The City and its "public employees" as defined in the New Mexico Tort Claims Act, do not waive sovereign immunity, do not waive any defense and do not waive any limitation of liability pursuant to law. No provision in this Contract modifies or waives any provision of the New Mexico Tort Claims Act.

27. **Applicable Law**

The laws of the State of New Mexico shall govern this Contract, without giving effect to its choice of law provisions. Venue shall be proper only in a New Mexico court of competent jurisdiction in accordance with NMSA 1978, Section 38-3-2. By execution of this Contract, Contractor acknowledges and agrees to the jurisdiction of the courts of the State of New Mexico over any and all lawsuits arising under or out of any term of this Contract.

28. **Limitation of Liability**

The Contractor's liability to the City, for any cause whatsoever shall be limited to the purchase price paid to the Contractor for the products and services that are the subject of the City's, claim. The foregoing limitation does not apply to paragraph 25 of this Contract or to damages resulting from personal injury caused by the Contractor's negligence.

29. **Incorporation by Reference and Precedence**

If this Contract has been procured pursuant to a request for proposals, this Contract is derived from (1) the request for proposal, (including any written clarifications to the request for proposals and any City response to questions); (2) the Contractor's best and final offer; and (3) the Contractor's response to the request for proposals.

In the event of a dispute under this Contract, applicable documents will be referred to for the purpose of clarification or for additional detail in the following order of precedence: (1) amendments to the Contract in reverse chronological order; (2) the Contract, including the scope of work and all terms and conditions thereof; (3) the request for proposals, including attachments thereto and written responses to questions and written clarifications; (4) the Contractor's best and final offer if such has been made and accepted by the City; and (5) the Contractor's response to the request for proposals.

30. **Workers' Compensation**

The Contractor agrees to comply with state laws and rules applicable to workers' compensation benefits for its employees. If the Contractor fails to comply with the Workers' Compensation Act and applicable rules when required to do so, this Contract may be terminated by the City.

32. **Inspection of Services**

If this contract is for the purchase of services, the following terms shall apply.

A. Services, as used in this Article, include services performed, workmanship, and material furnished or utilized in the performance of services.

B. The Contractor shall provide and maintain an inspection system acceptable to the City covering the services under this Contract. Complete records of all inspection work performed by the Contractor shall be maintained and made available to the City and for as long thereafter as the Contract requires. The City has the right to inspect and test all services contemplated under this Contract to the extent practicable at all times and places during the term of the Contract. The City shall perform inspections and tests in a manner that will not unduly delay or interfere with Contractor's performance.

C. If the City performs inspections or tests on the premises of the Contractor or a subcontractor, the Contractor shall furnish, and shall require subcontractors to furnish, at no increase in contract price, all

reasonable facilities and assistance for the safe and convenient performance of such inspections or tests.

D. If any part of the services do not conform with the requirements of this Contract, the City may require the Contractor to re-perform the services in conformity with the requirements of this Contract at no increase in contract amount. When the defects in services cannot be corrected by re-performance, the City may:

(1) require the Contractor to take necessary action(s) to ensure that future performance conforms to the requirements of this Contract; and

(2) reduce the contract price to reflect the reduced value of the services performed.

E. If the Contractor fails to promptly re-perform the services or to take the necessary action(s) to ensure future performance in conformity with the requirements of this Contract, the City may:

(1) by contract or otherwise, perform the services and charge to the Contractor any cost incurred by the City that is directly related to the performance of such service; or

(2) terminate the contract for default.

33. **Insurance**

If the services contemplated under this Contract will be performed on or in City facilities or property, Contractor shall maintain in force during the entire term of this Contract, the following insurance coverage(s), naming the City as additional insured.

A. **Commercial General Liability** insurance shall be written on an occurrence basis and be a broad as ISO Form CG 00 01 with limits not less than $1,000,000 per occurrence and $2,000,000 in the aggregate for claims against bodily injury, personal and advertising injury, and property damage. Said policy shall include broad form Contractual Liability coverage and be endorsed to name the City of Santa Fe their officials, officers, employees, and agents as additional insureds.

B. **Broader Coverage and Limits.** The insurance requirements under this Contract shall be the greater of (1) the minimum coverage and limits specified in this Contract, or (2) the broader coverage and maximum limits of coverage of any insurance policy or proceeds available to the Named Insured. It is agreed that these insurance requirements shall not in any way act to reduce coverage that is broader or that includes higher limits than the minimums required herein. No representation is made that the minimum insurance requirements of this Contract are sufficient to cover the obligations of Contractor hereunder.

C. Contractor shall maintain the above insurance for the term of this Contract and name the City as an additional insured and provide for 30 days cancellation notice on any Certificate of Insurance form furnished by Contractor. Such certificate shall also specifically state the coverage provided under the policy is primary over any other valid and collectible insurance and provide a waiver of subrogation.

34. **Impracticality of Performance**

A party shall be excused from performance under this Contract for any period that the party is prevented from performing as a result of an act of God, strike, war, civil disturbance, epidemic, or court order, provided that the party has prudently and promptly acted to take any and all steps that are within the party's control to ensure performance. Subject to this provision, such non-performance shall not be deemed a default or a ground for termination.

35. **Invalid Term or Condition**

If any term or condition of this Contract shall be held invalid or unenforceable, the remainder of this

Contract shall not be affected and shall be valid and enforceable.

36. **Enforcement of Contract**

A party's failure to require strict performance of any provision of this Contract shall not waive or diminish that party's right thereafter to demand strict compliance with that or any other provision. No waiver by a party of any of its rights under this Contract shall be effective unless express and in writing, and no effective waiver by a party of any of its rights shall be effective to waive any other rights.

37. **Patent, Copyright and Trade Secret Indemnification**

A. The Contractor shall defend, at its own expense, the City against any claim that any product or service provided under this Contract infringes any patent, copyright to trademark in the United States or Puerto Rico, and shall pay all costs, damages and attorneys' fees that a court finally awards as a result of any such claim. In addition, if any third party obtains a judgment against the City based upon Contractor's trade secret infringement relating to any product or services provided under this Contract, the Contractor agrees to reimburse the City for all costs, attorneys' fees and amount of the judgment. To qualify for such defense and or payment, the City shall:

1) give the Contractor prompt written notice within 48 hours of any claim;
2) allow the Contractor to control the defense of settlement of the claim; and
3) cooperate with the Contractor in a reasonable way to facilitate the defense or settlement of the claim.

B. If any product or service becomes, or in the Contractor's opinion is likely to become the subject of a claim of infringement, the Contractor shall at its option and expense:

1) provide the City the right to continue using the product or service and fully indemnify the City against all claims that may arise out of the City's use of the product or service;
2) replace or modify the product or service so that it becomes non-infringing; or,
3) accept the return of the product or service and refund an amount equal to the value of the returned product or service, less the unpaid portion of the purchase price and any other amounts, which are due to the Contractor. The Contractor's obligation will be void as to any product or service modified by the City to the extent such modification is the cause of the claim.

38. **Survival**

The Contract paragraphs titled "Patent, Copyright, Trademark, and Trade Secret Indemnification; Indemnification; and Limit of Liability" shall survive the expiration of this Contract. Software licenses, leases, maintenance and any other unexpired Agreements that were entered into under the terms and conditions of this Contract shall survive this Contract.

39. **Disclosure Regarding Responsibility**

A. Any prospective Contractor and any of its Principals who enter into a contract greater than sixty thousand dollars ($60,000.00) with any City for professional services, tangible personal property, services or construction agrees to disclose whether the Contractor, or any principal of the Contractor's company is presently debarred, suspended, proposed for debarment, or declared ineligible for award of contract by any federal entity, state agency or local public body.

B. Principal, for the purpose of this disclosure, means an officer, director, owner, partner, or a person having primary management or supervisory responsibilities within a business entity or related entities.

C. The Contractor shall provide immediate written notice to the City if, at any time during the term of this Contract, the Contractor learns that the Contractor's disclosure was at any time erroneous or became erroneous by reason of changed circumstances.

D. A disclosure that any of the items in this requirement exist will not necessarily result in termination of this Contract. However, the disclosure will be considered in the determination of the Contractor's responsibility and ability to perform under this Contract. Failure of the Contractor to furnish a disclosure or provide additional information as requested will be grounds for immediate termination of this Contract pursuant to the conditions set forth in Paragraph 7 of this Contract.

E. Nothing contained in the foregoing shall be construed to require establishment of a system of records in order to render, in good faith, the disclosure required by this document. The knowledge and information of a Contractor is not required to exceed that which is the normally possessed by a prudent person in the ordinary course of business dealings.

F. The disclosure requirement provided is a material representation of fact upon which reliance was placed when making an award and is a continuing material representation of the facts during the term of this Contract. If during the performance of the contract, the Contractor is indicted for or otherwise criminally or civilly charged by any government entity (federal, state or local) with commission of any offenses named in this document the Contractor must provide immediate written notice to the City. If it is later determined that the Contractor knowingly rendered an erroneous disclosure, in addition to other remedies available to the Government, the City may terminate the involved contract for cause. Still further the City may suspend or debar the Contractor from eligibility for future solicitations until such time as the matter is resolved to the satisfaction of the City.

40. **Suspension, Delay or Interruption of Work**

The City may, without cause, order the Contractor, in writing, to suspend, delay or interrupt the work in whole or in part for such period of time as the City may determine. The contract sum and contract time shall be adjusted for increases in cost and/or time associated with Contractor's compliance therewith. Upon receipt of such notice, Contractor shall leave the jobsite and any equipment in a safe condition prior to departing. Contractor must assert rights to additional compensation within thirty (30) days after suspension of work is lifted and return to work is authorized. Any compensation requested for which entitlement is granted and the contract sum adjusted, shall have profit included (for work completed) and for cost only (not profit) for Contractor costs incurred directly tied to the suspension itself and not otherwise covered by Contract remedy. Any change in Total Compensation must be reflected in an Amendment executed pursuant to Section 8 of this Contract.

41. **Third-Party Beneficiaries**

By entering into this Agreement, the parties do not intend to create any right, title or interest in or for the benefit of any person other than CITY and CONTRACTOR. No person shall claim any right, title or interest under this Agreement or seek to enforce this Agreement as a third-party beneficiary of this Agreement.

42. **Severability**

In case any one or more of the provisions contained in this Agreement or any application thereof shall be invalid, illegal or unenforceable in any respect, the validity, legality, and enforceability of the remaining provisions contained herein and any other application thereof shall not in any way be affected or impaired thereby.

43. **Notification**

Either party may give written notice to the other party in accordance with the terms of this Paragraph. Any written notice required or permitted to be given hereunder shall be deemed to have been given on the date of delivery if delivered by personal service or hand delivery or three (3) business days after being mailed.

To the City:

City of Santa Fe Fire Department
Attn: Sten Johnson, Assistant Chief
200 Murales Road
Santa Fe, New Mexico 87504

To the Contractor:

Systems Design West, LLC
Jenn Braus, CEO
19265 Powder Hill Pl NE
Poulsbo, Washington 97370

Either party may change its representative or address above by written notice to the other in accordance with the terms of this Paragraph. The carrier for mail delivery and notices shall be the agent of the sender.

Systems Design West, LLC.
Jenn Braus, CEO
19265 Powder Hill Pl NE
Poulsbo, Washington 98370

42. **Succession**

This Contract shall extend to and be binding upon the successors and assigns of the parties.

IN WITNESS WHEREOF, the Parties have executed this Contract as of the date of the signature by the required approval authorities below.

CITY OF SANTA FE:

Alan Webber (Aug 1, 2024 18:25 MDT)

ALAN WEBBER, MAYOR

DATE: Aug 1, 2024

CONTRACTOR:
Systems Design West, LLC

Jennifer Braus
Jennifer Braus (Jun 7, 2024 15:40 PDT)

Jenn Braus, CEO

DATE: Jun 7, 2024

NMBTIN: _____

Registration #: _____

ATTEST:

GERALYN CARDENAS, INTERIM CITY CLERK
GB MTG 07/31/2024 XIV

CITY ATTORNEY'S OFFICE:

Jun 7, 2024

ASSISTANT CITY ATTORNEY

APPROVED FOR FINANCES:

Emily K. Oster

EMILY OSTER, FINANCE DIRECTOR

EXHIBIT A

3-37-7. Determination of uncollectable account; removal from accounts receivable.

If the finance officer of a municipality states:

A. the manner in which a utility account or any unsecured account has been incurred;

B. the efforts made to collect the utility account or unsecured account and to locate the debtor;

C. that the utility account or unsecured account has been uncollectable for a period of more than four years; and

D. that in his opinion the utility account or unsecured account is uncollectable, the governing body of a municipality may, by resolution, remove the uncollectable utility account or unsecured account from the list of accounts receivable of the municipality.

History: 1953 Comp.,§ 14-36-7, enacted by Laws 1965, ch. 19, § 1.

ANNOTATIONS

This procedure enables a municipality to adjust its financial books so as to reflect a more favorable financial picture. Presumably, if the uncollectible accounts were later shown to be collectible in some manner, the rights of the municipality would not have been extinguished by the removal procedure and the municipality could proceed to collect from the debtor unless it was barred by the statute of limitations. 1970 Op. Att'y Gen. No. 70-88.

EXHIBIT B

Business Associate Agreement
Between City of Santa Fe and Systems Design West, LLC

This Business Associate Agreement ("Agreement") between City of Santa Fe ("Covered Entity") and Systems Design West, LLC ("Business Associate") is executed to ensure that Systems Design West, LLC will appropriately safeguard protected health information ("PHI") and personally identifiable information ("PII") that is created, received, maintained, or transmitted on behalf of the City of Santa Fe in compliance with applicable federal, state, and local statutes, regulations, rules and policies—including but not limited to, the provisions of Public Law 104-191 of August 21, 1996, known as the Health Insurance Portability and Accountability Act of 1996, Subtitle F – Administrative Simplification, Sections 261, *et seq.*, as amended ("HIPAA"), and with the Public Law 111-5 of February 17, 2009, known as the American Recovery and Reinvestment Act of 2009, Title XII, Subtitle D – Privacy, Sections 13400, *et seq.*, the Health Information Technology and Clinical Health Act, as amended (the "HITECH Act").

A. General Provisions

1. **Meaning of Terms**. The terms used in this Agreement shall have the same meaning as those terms defined in HIPAA.

2. **Regulatory References**. Any reference in this Agreement to a regulatory section means the section currently in effect or as amended.

3. **Interpretation**. Any ambiguity in this Agreement shall be interpreted to permit compliance with HIPAA.

B. Catch-all Definition

The following terms used in this Agreement shall have the same meaning as those terms in the HIPAA Rules: Breach, Data Aggregation, Designated Record Set, Disclosure, Health Care Operations, Individual, Minimum Necessary, Notice of Privacy Practices, Protected Health Information, Required By Law, Secretary, Security Incident, Subcontractor, Unsecured Protected Health Information, and Use.

Specific definitions:

(a) Business Associate. "Business Associate" shall generally have the same meaning as the term "business associate" at 45 CFR 160.103, and in reference to the party to this agreement, shall mean Systems Design West, LLC.

(b) Covered Entity. "Covered Entity" shall generally have the same meaning as the term "covered entity" at 45 CFR 160.103, and in reference to the party to this agreement, shall mean the City of Santa Fe.

(c) HIPAA Rules. "HIPAA Rules" shall mean the Privacy, Security, Breach Notification, and Enforcement Rules at 45 CFR Part 160 and Part 164.

C. Obligations of Systems Design West, LLC

Systems Design West, LLC agrees to:

1. Use appropriate safeguards and comply, where applicable, with the HIPAA Security Rule with respect to electronic protected health information ("e-PHI") and electronic personally identifiable information ("e-PII") as well as implement appropriate physical, technical and administrative safeguards to prevent use or disclosure of PHI and PII other than as provided for by this Agreement;

2. Report to the Covered Entity any use or disclosure of PHI and PII not provided for by this Agreement of which it becomes aware, including any security incident (as defined in the HIPAA Security Rule) and any breaches of unsecured PHI and PII as required by 45 CFR §164.410. Breaches of unsecured PHI and PII shall be reported to the Covered Entity and affected parties without unreasonable delay but in no case later than 30 days after discovery of the breach;

3. In accordance with 45 CFR 164.502(e)(1)(ii) and 164.308(b)(2), ensure that any subcontractors that create, receive, maintain, or transmit PHI and PII on behalf of Systems Design West, LLC agree to the same restrictions, conditions, and requirements that apply to Systems Design West, LLC with respect to such information;

4. Make PHI and PII in a designated record set available to the Covered Entity and to an individual who has a right of access in a manner that satisfies the Covered Entity's obligations to provide access to PHI and PII in accordance with 45 CFR §164.524 within 30 days of a request;

5. Make any amendment(s) to PHI and PII in a designated record set as directed by the Covered Entity, or take other measures necessary to satisfy the Covered Entity's obligations under 45 CFR §164.526;

6. Maintain and make available information required to provide an accounting of disclosures to the Covered Entity or an individual who has a right to an accounting within 60 days and as necessary to satisfy the Covered Entity's obligations under 45 CFR §164.528.

7. To the extent that Systems Design West, LLC is to carry out any of the Covered Entity's obligations under the HIPAA Privacy Rule, Systems Design West, LLC shall comply with the requirements of the Privacy Rule that apply to the Covered Entity when it carries out that obligation;

8. Make its internal practices, books, and records relating to the use and disclosure of PHI and PII received from, or created or received by Systems Design West, LLC on behalf of the Covered Entity, available to the Secretary of the Department of Health and Human Services for purposes of determining Systems Design West, LLC and the Covered Entity's compliance with HIPAA and the HITECH Act;

9. Restrict the use or disclosure of PHI and PII if the Covered Entity notifies Systems Design West, LLC of any restriction on the use or disclosure of PHI and PII that the Covered Entity has agreed to or is required to abide by under 45 CFR §164.522; and

10. If the Covered Entity is subject to the Red Flags Rule (found at 16 CFR §681.1 *et seq.*), Systems Design West, LLC agrees to assist the Covered Entity in complying with its Red Flags Rule obligations by: (a) implementing policies and procedures to detect relevant Red Flags (as defined under 16 CFR §681.2); (b) taking all steps necessary to comply with the policies and procedures of the Covered Entity's Identity Theft Prevention Program; (c) ensuring that any agent or third party who performs services on its behalf in connection with covered accounts of the Covered Entity agrees to implement reasonable policies and procedures designed to detect, prevent, and mitigate the risk of identity theft; and (d) alerting the Covered Entity of any Red Flag incident (as defined by the Red Flag Rules) of which it becomes aware, the steps it has taken to mitigate any potential harm that may have occurred, and provide a report to the Covered Entity of any threat of identity theft as a result of the incident.

11. Comply with all current rules and regulations pertaining to the OIG Compliance Program for ambulance suppliers and special bulletin regarding LEIE recommended screening of employees and any subcontractors.

D. Permitted Uses and Disclosures by Systems Design West, LLC

Systems Design West, LLC may use or disclose PHI and PII as required by law and consistent with the Minimum Necessary standard—specifically, the use and disclosure of PHI and PII will be limited to the minimum necessary for accomplishing the intended purpose of the use and disclosure. The specific uses and disclosures of PHI and PII that may be made by Systems Design West, LLC on behalf of the Covered Entity include:

1. The preparation of invoices to patients, carriers, insurers and others responsible for payment or reimbursement of the services provided by the Covered Entity to its patients;

2. Preparation of reminder notices and documents pertaining to collections of overdue accounts;

3. The submission of supporting documentation to carriers, insurers and other payers to substantiate the healthcare services provided by the Covered Entity to its patients or to appeal denials of payment for the same; and

4. Other uses or disclosures of PHI and PII as permitted by HIPAA necessary to perform the services that Systems Design West, LLC has been engaged to perform on behalf of the Covered Entity.

E. Termination

1. The Covered Entity may terminate this Agreement if the Covered Entity determines that Systems Design West, LLC has violated a material term of this Agreement.

2. If either party knows of a pattern of activity or practice of the other party that constitutes a material breach or violation of the other party's obligations under this Agreement, that party shall take reasonable steps to cure the breach or end the violation, as applicable, and, if such steps are unsuccessful, terminate the Agreement if feasible.

3. Upon termination of this Agreement for any reason, Systems Design West, LLC shall return to the Covered Entity or destroy all PHI and PII received from the Covered Entity, or created, maintained, or received by Systems Design West, LLC on behalf of the Covered Entity that Systems Design West, LLC still maintains in any form. Systems Design West, LLC shall retain no copies of the PHI and PII. If return or destruction is infeasible, the protections of this Agreement will extend to such PHI.

Agreed to on this date: _____

Systems Design West, LLC

Signature: _____

Name: _____

Title: _____

Date: _____

City of Santa Fe

Signature: _____

Name: _____

Title: _____

Date: _____

CERTIFICATE OF LIABILITY INSURANCE

DATE (MM/DD/YYYY): 01/19/2025

THIS CERTIFICATE IS ISSUED AS A MATTER OF INFORMATION ONLY AND CONFERS NO RIGHTS UPON THE CERTIFICATE HOLDER. THIS CERTIFICATE DOES NOT AFFIRMATIVELY OR NEGATIVELY AMEND, EXTEND OR ALTER THE COVERAGE AFFORDED BY THE POLICIES BELOW. THIS CERTIFICATE OF INSURANCE DOES NOT CONSTITUTE A CONTRACT BETWEEN THE ISSUING INSURER(S), AUTHORIZED REPRESENTATIVE OR PRODUCER, AND THE CERTIFICATE HOLDER.

IMPORTANT: If the certificate holder is an ADDITIONAL INSURED, the policy(ies) must have ADDITIONAL INSURED provisions or be endorsed. If SUBROGATION IS WAIVED, subject to the terms and conditions of the policy, certain policies may require an endorsement. A statement on this certificate does not confer rights to the certificate holder in lieu of such endorsement(s).

PRODUCER Willis Towers Watson Northeast, Inc. c/o 26 Century Blvd P.O. Box 305191 Nashville, TN 372305191 USA	CONTACT NAME: WTW Certificate Center PHONE (A/C, No, Ext): 1-877-945-7378 FAX (A/C, No): 1-888-467-2378 E-MAIL ADDRESS: certificates@wtwco.com
INSURED Systems Design West 19265 Powder Hill Place NE Poulsbo, WA 98370	INSURER A : CNA Insurance Company Limited — NAIC # B0180 INSURER B : National Fire Insurance Company of Hartfor — 20478 INSURER C : Continental Insurance Company — 35289 INSURER D : Underwriters at Lloyd's London — 15792 INSURER E : INSURER F :

COVERAGES **CERTIFICATE NUMBER:** W37490212 **REVISION NUMBER:**

THIS IS TO CERTIFY THAT THE POLICIES OF INSURANCE LISTED BELOW HAVE BEEN ISSUED TO THE INSURED NAMED ABOVE FOR THE POLICY PERIOD INDICATED. NOTWITHSTANDING ANY REQUIREMENT, TERM OR CONDITION OF ANY CONTRACT OR OTHER DOCUMENT WITH RESPECT TO WHICH THIS CERTIFICATE MAY BE ISSUED OR MAY PERTAIN, THE INSURANCE AFFORDED BY THE POLICIES DESCRIBED HEREIN IS SUBJECT TO ALL THE TERMS, EXCLUSIONS AND CONDITIONS OF SUCH POLICIES. LIMITS SHOWN MAY HAVE BEEN REDUCED BY PAID CLAIMS.

INSR LTR	TYPE OF INSURANCE	ADDL INSD	SUBR WVD	POLICY NUMBER	POLICY EFF (MM/DD/YYYY)	POLICY EXP (MM/DD/YYYY)	LIMITS	
A	[X] COMMERCIAL GENERAL LIABILITY [ ] CLAIMS-MADE [X] OCCUR GEN'L AGGREGATE LIMIT APPLIES PER: [ ] POLICY [ ] PRO-JECT [X] LOC [ ] OTHER:			6023971937	01/11/2025	01/11/2026	EACH OCCURRENCE DAMAGE TO RENTED PREMISES (Ea occurrence) MED EXP (Any one person) PERSONAL & ADV INJURY GENERAL AGGREGATE PRODUCTS - COMP/OP AGG	$ 1,000,000 $ 100,000 $ 15,000 $ 1,000,000 $ 2,000,000 $ 2,000,000
B	AUTOMOBILE LIABILITY [ ] ANY AUTO [ ] OWNED AUTOS ONLY [ ] SCHEDULED AUTOS [X] HIRED AUTOS ONLY [X] NON-OWNED AUTOS ONLY			BUA 6023971968	01/11/2025	01/11/2026	COMBINED SINGLE LIMIT (Ea accident) BODILY INJURY (Per person) BODILY INJURY (Per accident) PROPERTY DAMAGE (Per accident)	$ 1,000,000 $ $ $
C	[X] UMBRELLA LIAB [X] OCCUR EXCESS LIAB [ ] CLAIMS-MADE [ ] DED [X] RETENTION $ 10,000			6023971954	01/11/2025	01/11/2026	EACH OCCURRENCE AGGREGATE	$ 2,000,000 $ 2,000,000
	WORKERS COMPENSATION AND EMPLOYERS' LIABILITY Y / N ANYPROPRIETOR/PARTNER/EXECUTIVE OFFICER/MEMBER EXCLUDED? [ ] (Mandatory in NH) If yes, describe under DESCRIPTION OF OPERATIONS below	N / A					[ ] PER STATUTE [ ] OTH-ER E.L. EACH ACCIDENT E.L. DISEASE - EA EMPLOYEE E.L. DISEASE - POLICY LIMIT	$ $ $
D	E&O/Cyber Security Liability			PF00099C24	01/11/2025	01/11/2026	Each Claim: Each Aggregate:	$2,000,000 $4,000,000

DESCRIPTION OF OPERATIONS / LOCATIONS / VEHICLES (ACORD 101, Additional Remarks Schedule, may be attached if more space is required)

CERTIFICATE HOLDER

Evidence of Insurance

CANCELLATION

SHOULD ANY OF THE ABOVE DESCRIBED POLICIES BE CANCELLED BEFORE THE EXPIRATION DATE THEREOF, NOTICE WILL BE DELIVERED IN ACCORDANCE WITH THE POLICY PROVISIONS.

AUTHORIZED REPRESENTATIVE

Patricia A Forry

© 1988-2016 ACORD CORPORATION. All rights reserved.

THE CITY OF
SANTA FE

MEMORANDUM

DATE: December 2, 2025

TO: Mark Scott, City Manager
Emily Oster, Finance Director
Andy Hopkins, Budget
Erika Lujan, Grants Administrator

FROM: Toniette Candelaria-Martinez, Fiscal Administrator

VIA: Brian Moya, Fire Chief

SUBJECT: Ambulance Supplemental Payment Program

ITEM AND ISSUE:
Request for Approval of a Budget Amendment Resolution (BAR) to Allocate $158,624 as per the terms of the MOA between New Mexico Health Care Authority (HCA) and City of Santa Fe to pay Public Consulting Group the 14% contingency fee from 1000001.470400 to 1002001.510300:

From Line Items:

- 1000001.470400 $(158,624)

To Line Items:

- 1002001.510300 $158,624

BACKGROUND AND SUMMARY:
The Fire Department entered into Memorandum of Agreement with New Mexico Health Care Authority (HCA) to facilitate an Inter-Governmental Transfer (IGT) of funds for the purpose of participation in the New Mexico Ambulance Supplemental Payment Program (NM ASPP).

The NM ASPP is a state directed payment that assists in promoting the continued delivery of high-quality Emergency Medical Services (EMS) to Medicaid patients. The NM ASPP emergency ground ambulance services (EGAS) providers are paid a quarterly supplemental payment tied to actual utilization.

The City pays the IGT to HCA. HCA applies the funds as a grant share to draw down supplemental payment from Managed Care Organizations (MCOs)/Medicaid. The supplemental

payment then comes back to the City.

ACTION REQUESTED:
The Fire Department respectfully requests your review and approval.

ATTACHMENTS:
BAR
Project Ledger FIR2610000
NM Santa Fe Fire Department Invoice CIV-10037244 2025-10-09
CY24 MOA (MOA 25-630-8000-0062 Jan-Jun 2024 City ofSanta Fe Fire Department 5-30-25)

Log # *{Finance use only}*:	
Journal # *{Finance use only}*:	

City of Santa Fe, New Mexico
BUDGET AMENDMENT RESOLUTION (BAR)

DEPARTMENT / DIVISION NAME	DATE
200 / Fire Department	12/2/2025

ITEM DESCRIPTION	ORG	OBJECT	PROJECT	INCREASE	DECREASE
EXPENDITURES				*{enter as positive #}*	*{enter as negative #}*
Professional Contracts	1002001	510300	FIR2610000	158,624	
REVENUES				*{enter as negative #}*	*{enter as positive #}*
Reimbursements/Refunds	1000001	470400	FIR2610000	(158,624)	
				$ -	$ -

JUSTIFICATION: *(use additional page if needed)*
--Attach supporting documentation/memo
Increase Fire Department Fund 1002001 for FY26 by adding $158,624 (this will pay the Ambulance Supplemental Payment Program invoice the City owes Public Consulting Group per MOA with NM Health Care Authority.

{Complete section below if BAR results in a net change to ANY Fund}

Fund(s) Affected	Fund Balance Increase/(Decrease)
TOTAL:	**0**

TONIETTE CANDELARIA MARTINEZ 12/2/2025
Prepared By *{print name}* Date

Division Director Signature *{optional}* Date

BRIAN MOYA
Department Director Signature Date

{Use this form for Finance Committee/ City Council agenda items ONLY}

CITY COUNCIL APPROVAL

City Council Approval Date

Agenda Item #:

Andy Hopkins
Budget Officer Date

Emily K. Oster
Finance Director *{≤ $5,000}* Date

Mark Scott (Dec 11, 2025 20:05:34 MST)
City Manager *{≤ $60,000}* Date

Account

Fund	100	GENFUND	Acct	100-10-99-9999-001-00-000-470400-	
Org	1000001	NonDept GF	Acct name	Reimbursements/Refunds	Account Notes
Object	470400	Reimb/Rfds	Type	Revenue	Status: Active
Project			Rollup		
			Sub-Rollup		

MultiYr Fund

4 Year Comparison | History | 4 Year Graph | History Graph

Yr/Per 2026/01	Fiscal Year 2026	Fiscal Year 2025	Fiscal Year 2024	Fiscal Year 2027
Original Budget	-128,308.00	-107,500.00	-130,000.00	.00
Transfers In	.00	.00	.00	.00
Transfers Out	.00	.00	.00	.00
Revised Budget	-128,308.00	-107,500.00	-130,000.00	.00
Actual (Memo)	-979,499.05	-3,084.63	-84,581.40	.00
Encumbrances	.00	.00	.00	.00
Requisitions	.00			.00
Available	851,191.05	-104,415.37	-45,418.60	.00
Percent used	763.40	2.87	65.06	.00

Account

Fund	100 GENFUND	Acct	100-15-20-2001-000-00-000-510300-		
Org	1002001 Fire Admin	Acct name	Professional Contracts		Account Notes
Object	510300 Prfsl Cntr	Type	Expense	Status	Active
Project		Rollup	GFFDC	FireAdministrationCNT	
		Sub-Rollup			

MultiYr Fund

4 Year Comparison | Current Year | History | 4 Year Graph | History Graph

Yr/Per 2026/01	Fiscal Year 2026	Fiscal Year 2025	Fiscal Year 2024	Fiscal Year 2027
Original Budget	404,427.00	404,427.00	152,019.00	.00
Transfers In	52,223.00	22,000.00	.00	.00
Transfers Out	.00	.00	.00	.00
Revised Budget	456,650.00	426,427.00	152,019.00	.00
Actual (Memo)	155,410.32	401,413.84	152,367.97	.00
Encumbrances	242,178.18	.00	.00	.00
Requisitions	.00			.00
Available	59,061.50	25,013.16	-348.97	.00
Percent used	87.07	94.13	100.23	.00

City of Santa Fe New Mexico

Finance Department

Project Ledger Request Form

ERIKA LUJAN
ERIKA LUJAN (Dec 2, 2025 14:31:41 MST)

Date of Request: 11/24/25

Project Title: AMBULANCE SUPPLEMENTAL FUND

Project Type: ☐ CIP ☐ Grant ☑ Internal Tracking

Project ID: FIR2610000
Grant ID: N/A
Approved By: ERIKA LUJAN
ERIKA LUJAN (Nov 25, 2025 10:28:10 MST)
CT (Finance Use Only)

Department: FIRE Project Manager: TONI CANDELARIA-MTZ Ext: 3109

Project Date Range: 7/1/25 to 6/30/29 ☐ Create Fixed Asset

☐ Multi-Funding (complete all funding sources, should equal 100%)

Funding Source: MEDICAID ELIGIBLE AMB REIMBURSEMENTS % of Funding: NON GRANTS

MUNIS ORG: 1000001 MUNIS OBJ: 470400 Awarded Amount: TBD

Funding Source: FIRE ADMINISTRATION % of Funding:

MUNIS ORG: 1002001 MUNIS OBJ: Awarded Amount: TBD

Expense String Phase:

A project must have at least one phase identified, this can be used as an additional level of tracking, for example, CIP - Design, Construction, etc. For Grants can be used as reimbursable types, such as transportation, salaries.

(You can create more than one phase and you can default MUNIS ORGs and OBJs, optional)

Phase: TBD CONTRACTUAL MUNIS ORG: 1002001 MUNIS OBJ: 510300

Grants Only (list all grants if applicable):

Grantor Name: Awarded Amount:

AR Charge Code: ☐ Grant funds multiple projects (Complete a form for each project)

Grantor Id: Federal CFDA (if applicable):

Grantor Name: (NON GRANT REIMBURSE FOR MEDICAID ELIGIBLE -- Awarded Amount: SEE NOTE* NOT A GRANT

AR Charge Code: --RIDERS IN AMBULANCE) ☐ Grant funds multiple projects (Complete a form for each project)

Grantor Id: Federal CFDA (if applicable):

(If grants please provide all grant award documents with form) ☐ Attached Grant Documentation

Public Consulting Group LLC (Health)

INVOICE

Customer ID: 104034
Invoice Number: CIV-10037244
Invoice Date: 10/09/2025
Due Date: 11/08/2025
Terms: Net 30
Amount Due: USD 158,623.62

Bill To:

NM Santa Fe Fire Department
200 Murales Rd
Santa Fe, NM 87501

Description	Quantity	UOM	From Date	To Date	Unit Price	Amount
Medicaid	1133025.83	Each			0.14	158,623.62

Sub Total	**158,623.62**
Tax	**0.00**
Invoice Total	**158,623.62**

For questions, please reach out to your company contact or email pcghealthfinance@pcgus.com

To ensure accurate payment processing, kindly include the invoice number as indicated on this document in the following format: CIV-10037244

Please Remit Payments to:

Bank name: Citizens Bank
Routing: 211070175
Branch:

Address:
Account: 1109586385
IBAN:
SWIFT:

Via Mail:

Public Consulting Group LLC (Health)
P.O. Box 845308
Boston, MA 02284-5308
United States of America

Docusign Envelope ID: A8FA310F-3FDD-45A1-A626-4376CC33201A

MEMORANDUM OF AGREEMENT

THIS MEMORANDUM OF AGREEMENT (MOA) constitutes an agreement between the **New Mexico Health Care Authority (HCA),** and The **City of Santa Fe (Ambulance Services)**, collectively referred to as the "Parties," regarding the implementation of Ambulatory Supplemental Payment Program (ASPP).

I. DEFINITIONS

A. Intergovernmental Transfers or IGTs means transfers of funds from a non-Medicaid governmental entity (e.g., counties, hospital taxing districts, providers operated by state or local government) to the Medicaid agency. IGTs must be compliant with 42 CFR Part 433, Subpart B. In this MOA, the IGT Provider is the City.

B. Medicaid means the medical assistance program authorized by Title XIX of the Social Security Act, 42 US.C. §§ 1396 et seq., and regulations, as administered in New Mexico by the Agency

C. Agency means HCA.

II. GENERAL PROVISIONS

The IGT Provider and the Agency agree that the IGT Provider will remit IGT funds to the Agency in an amount not to exceed $871,970.20.

A. . The IGT Provider and the Agency have agreed that these IGT funds will only be used for the ASPP.

B. The IGT Provider will sign and return this MOA to the Agency.

C. The IGT Provider will pay IGT funds to the Agency in an amount not to exceed $871,970.20. The IGT Provider will transfer payments to the Agency in the following manner:
   i. The Agency will bill the IGT Provider when payment is due.
   ii. The IGT Provider and the Agency agree that the Agency will maintain necessary records and supporting documentation applicable to health services covered by this MOA in accordance with public records laws and established retention schedules.

III. AUDITS AND RECORDS

A. IGT Provider agrees to maintain books, records, and documents (including electronic storage media) pertinent to performance under this MOA in accordance with generally accepted accounting procedures and practices, which sufficiently and properly reflect all revenues and expenditures of funds provided.

Docusign Envelope ID: A8FA310F-3FDD-45A1-A626-4376CC33201A

B. IGT Provider agrees to assure that these records shall be subject at all reasonable times to inspection, review, or audit by state personnel and other personnel duly authorized by the Agency, as well as by federal personnel, if applicable.

C. IGT Provider agrees to comply with applicable public record inspection and retention laws.

IV. RETENTION OF RECORDS

A. The IGT Provider agrees to retain all financial records, supporting documents, statistical records, and any other documents (including electronic storage media) pertinent to performance under this MOA for a period of six years after termination of this MOA, or if an audit has been initiated and audit findings have not been resolved at the end of six years, the records shall be retained until resolution of the audit findings.

B. Persons duly authorized by the Agency and federal auditors will have full access to and the right to examine any records and documents from this MOA. The rights of access in this section will not be limited to the required retention period but will last as long as the records are retained. IGT Provider agrees to permit persons duly authorized by the Agency to inspect any records, papers, and documents of the IGT Provider which are relevant to this MOA.

V. ASSIGNMENT AND SUBCONTRACTS

The IGT Provider agrees to neither assign the responsibility of this MOA to another party nor subcontract for any of the work contemplated under this MOA without prior written approval of the Agency. No approval by the Agency of any assignment or subcontract will be deemed in any event or in any manner to provide for the incurrence of any obligation of the Agency in addition to the total dollar amount agreed upon in this MOA. All assignments or subcontracts shall be subject to the conditions of this MOA and to any conditions of approval that the Agency shall deem necessary.

VI. AMENDMENT

This MOA may only be amended upon a written instrument signed by the parties.

VII. ASSURANCES

A. IGT Provider confirms that there are no pre-arranged agreements (contractual or otherwise) between the respective counties, taxing districts, and/or the providers to re-direct any portion of these aforementioned supplemental payments in order to satisfy non-Medicaid, non- uninsured, and non-underinsured activities.

B. IGT Provider agrees the following provision will be included in any agreements between IGT Provider and local providers where IGT funding is provided pursuant to this MOA:

Docusign Envelope ID: A8FA310F-3FDD-45A1-A626-4376CC33201A

Funding provided in this agreement will be prioritized so that designated IGT funding must first be used to fund the Medicaid program and used secondarily for other purposes.

VIII. TERM

A. The duties under this MOA will be performed from January 1, 2024, through June 30, 2024, and this MOA terminates June 30, 2025, which includes the states certified forward period.

B. This MOA may be executed in multiple counterparts, each of which will constitute an original, and each of which will be fully binding on the party signing at least one counterpart.

Local Intergovernmental Transfers	
Program / Amount	
Estimated IGTs	$871,970.20
Total Funding Not to Exceed	$871,970.20

Docusign Envelope ID: A8FA310F-3FDD-45A1-A626-4376CC33201A

IN WITNESS THEREOF, the parties execute this Memorandum of Agreement.

HEALTH CARE AUTHORITY

By: DocuSigned by: Kari Armijo 1BA9EB5EAD00499... Date: 6/7/2025

Kari Armijo, HCA Cabinet Secretary

By: DocuSigned by: Carolee A. Graham FB15A98045214DA... Date: 6/2/2025

Carolee Graham, HCA Chief Financial Officer

Approved by General Counsel:

By: DocuSigned by: Mark Reynolds 6241C19C1E01414... Date: 6/2/2025

Mark Reynolds, HCA General Counsel

For the City of Santa Fe Fire Department

CITY OF SANTA FE:

Alan Webber (May 29, 2025 22:11 EDT)

ALAN WEBBER, MAYOR

DATE: 05/29/2025

ATTEST:

ANDREA SALAZAR (May 29, 2025 20:13 MDT)

ANDRÉA SALAZAR, CITY CLERK

GB MTG 05/28/2025

CITY ATTORNEY'S OFFICE:

ASSISTANT CITY ATTORNEY

Docusign Envelope ID: A8FA310F-3FDD-45A1-A626-4376CC33201A

APPROVED FOR FINANCES:

Emily K. Oster

EMILY OSTER, FINANCE DIRECTOR

Docusign Envelope ID: A8FA310F-3FDD-45A1-A626-4376CC33201A

New Mexico (NM) Ambulance Supplemental Payment Program (ASPP)

Calendar Year 2024 (CY24) Handout

March 2025

PUBLIC CONSULTING GROUP

Docusign Envelope ID: A8FA310F-3FDD-45A1-A626-4376CC33201A

INTRODUCTION

The NM ASPP allows government-owned Emergency Ground Ambulance Services (EGAS) providers to access additional federal funds for provided and billed Medicaid Managed Care Organization (MCO) transports. The effective date of the NM ASPP is **1/1/2024**, allowing participating EGAS providers to claim allowable costs for the CY24 cost reporting period.

HOW IT WORKS

The NM ASPP requires participating providers to complete an annual cost report that includes an average cost per transport used to calculate the supplemental add-on rate paid to providers when billing Medicaid MCO patients. The cost report is used to determine eligibility for the NM ASPP.

Upon completion of the NM ASPP cost report containing an average cost per transport, an intergovernmental transfer (i.e., grant matching) will be issued to participating EGAS providers so that they may yield their supplemental payments. The supplemental payment process is summarized below.

1. NM EGAS providers provide and bill for Medicaid MCO transports.
2. NM Healthcare Authority (HCA) invoices participating NM EGAS providers for the state share of their supplemental payment.
3. HCA uses provider's grant matching funds to draw down matching federal funds.
4. Each provider's grant matching dollars are returned, along with the matching federal share funds.

NEXT STEPS

CY24 Cost Report Submission

The CY24 (1/1/24 – 12/31/24) cost report must be uploaded to the Myers & Stauffer (M&S) web portal by Friday, 5/31/25 @ 5PM MT. **PCG will submit all required documentation on your behalf.**

CY24 M&S Audit

Shortly after cost report submission, M&S will perform cursory audits on all submitted CY24 NM ASPP cost reports. **PCG will address any potential follow up questions on your behalf.**

CY24 Payment

Supplemental payment for this program will not occur until the Preprint is submitted by HCA and CMS approves. Payments will be administered through a grant matching process between the providers and HCA. The payments will come directly from the MCOs.

PCG will invoice you for our provided CY24 cost reporting services after you confirm you receive payments.

CONTACT US

Please contact NMASPP@pcgus.com with any questions!

CY 2024 EGAS MCO Allotments

				MCO Total Allotment Projections Utilizing MMIS MCO Trips								
	Medicaid Number	Provider	Total Managed Care Transports (MMIS Data) 7/1/22 to 6/30/23	Jan-Jun 24 Total Allotment	Jan-Jun 24 IGTs Needed	Jan-Jun 24 Net New Federal Funding	Jul-Dec 24 Allotment	Jul-Dec 24 IGTs Needed	Jul-Dec 24 Net New Federal Funding	Total Allotment	Total IGTs Needed	Net New Federal Funding
1		Albuquerque Fire Rescue	841	$ 1,124,117.33	$ 308,120.56	$ 815,996.77	$ 1,124,117.33	$ 308,120.56	$ 815,996.77	$ 2,248,234.67	$ 616,241.12	$ 1,631,993.55
2		Artesia Fire Department	371	$ 495,894.80	$ 135,924.77	$ 359,970.03	$ 495,894.80	$ 135,924.77	$ 359,970.03	$ 991,789.61	$ 271,849.54	$ 719,940.07
3		Bernalillo County	197	$ 263,318.80	$ 72,175.68	$ 191,143.12	$ 263,318.80	$ 72,175.68	$ 191,143.12	$ 526,637.61	$ 144,351.36	$ 382,286.25
4		City of Santa Fe Fire Department	2380	$ 3,181,211.95	$ 871,970.20	$ 2,309,241.75	$ 3,181,211.95	$ 871,970.20	$ 2,309,241.75	$ 6,362,423.91	$ 1,743,940.40	$ 4,618,483.51
5		Las Cruces Fire Department	364	$ 486,538.30	$ 133,360.15	$ 353,178.15	$ 486,538.30	$ 133,360.15	$ 353,178.15	$ 973,076.60	$ 266,720.30	$ 706,356.30
6		Sandoval County Fire Department	749	$ 1,001,146.11	$ 274,414.15	$ 726,731.96	$ 1,001,146.11	$ 274,414.15	$ 726,731.96	$ 2,002,292.23	$ 548,828.30	$ 1,453,463.93
7		Santa Fe County Fire Department	874	$ 1,168,226.57	$ 320,210.90	$ 848,015.67	$ 1,168,226.57	$ 320,210.90	$ 848,015.67	$ 2,336,453.15	$ 640,421.80	$ 1,696,031.35
		Weighted Average Cost per Transport $ 2,673	**5776**	**$ 7,720,453.88**	**$ 2,116,176.41**	**$ 5,604,277.47**	**$ 7,720,453.88**	**$ 2,116,176.41**	**$ 5,604,277.47**	**$ 15,440,907.76**	**$ 4,232,352.82**	**$ 11,208,554.94**

NM FFY24 FMAP **72.59%**
State Share **27.41%**

Docusign Envelope ID: A8FA310F-3FDD-45A1-A626-4376CC33201A

Docusign Envelope ID: A8FA310F-3FDD-45A1-A626-4376CC33201A

From: DUTTON-LEYDA, TRAVIS K.
To: JOHNSON, STEN A.
Cc: LOVATO, JOANN D.
Subject: RE: MOA with NM Health Care Authority
Date: Tuesday, May 20, 2025 9:14:22 AM
Attachments: image003.png
image004.png
image006.png
image007.png



Thank you.

Regards,

Travis Dutton-Leyda
Chief Procurement Officer
City of Santa Fe
200 Lincoln Avenue
Santa Fe, NM 87501
505-629-8351
tkduttonleyda@santafenm.gov

Book time to meet with me

https://santafenm.gov/finance-2/purchasing-1

Vendor Registration and Current Procurement Opportunities:
https://cityofsantafenmvendors.munisselfservice.com/Vendors/VBids/SearchResults.aspx

Internal Link: https://intranet.santafenm.gov/central_purchasing_division_cpd

CITY OF SANTA FE
FINANCE

"A journey of a thousand miles begins with a single step" ~ Lao Tzu

---

From: LOVATO, JOANN D. <jdlovato@santafenm.gov>
Sent: Tuesday, May 20, 2025 9:05 AM
To: DUTTON-LEYDA, TRAVIS K. <tkduttonleyda@santafenm.gov>
Subject: FW: MOA with NM Health Care Authority

JoAnn D. Lovato Montaño, CPO
Procurement Manager
c: (505) 469-6045

From: JOHNSON, STEN A. <sajohnson@santafenm.gov>
Sent: Friday, May 2, 2025 3:34 PM
To: DUTTON-LEYDA, TRAVIS K. <tkduttonleyda@santafenm.gov>; LOVATO, JOANN D. <jdlovato@santafenm.gov>

Docusign Envelope ID: A8FA310F-3FDD-45A1-A626-4376CC33201A

Subject: MOA with NM Health Care Authority

Hi Travis and Joann,

I just submitted this on SharePoint. I don't have the MOA back from Legal yet but they are moving forward without changes to the MOA.
HCA is waiting on City of Santa Fe to begin this program so I am working to move this a quick as possible.
I think I recall a conversation that Travis made his determination of Exempt Purchase but I cannot find an email from you on this.

Can you please return a written determination? Also wanted you all to get your eyes on this asap. I'll send the approved MOA from Legal as soon as I get it.
The spreadsheet attached is pertinent because it shows the City's obligation to participate as well as the return back from Medicare.

As usual, call anytime if you have questions.

Thank you,

Sten A Johnson
Assistant Chief – Support Services
City of Santa Fe Fire Department
200 Murales Rd.
Santa Fe, New Mexico 87501
505-467-9799



Docusign Envelope ID: A8FA310F-3FDD-45A1-A626-4376CC33201A

Services Offered to the City of Santa Fe (2024)

Approved:
These services have been approved by the New Mexico Council for Purchasing from Persons with Disabilities and are available through Horizons of New Mexico.

- ADA Accessibility Consulting Services
- Auctioneering Services
- Bulk Mailing and Sorting
- Call Center Services
- Computer Refurbishing
- Courier Services
- Decontamination, Sanitation and Sterilization Services
- Debris Removal
- Document Imaging
- Document Shredding
- Envelope Stuffing
- General Labor
- Hard Drive Destruction
- Janitorial and Housekeeping Services – Including Carpet Cleaning & Floor Care
- Landscape Irrigation
- Landscaping
- Mailing Services
- Management of an Assistive Technology Reuse and Recycling Program
- Medical Waste Disposal
- Meeting Minute Preparation Services
- Pest Control and Extermination Services
- Printing Services
- Rest Area Maintenance
- Screen Printing
- Snow Removal
- Temporary Staffing Services
- Yard, Grounds, and Lawn Maintenance

Permissive:
The services have been approved by the New Mexico Council for Purchasing from Persons with Disabilities as permissible for sale under the State Use Act through Horizons of New Mexico. While the Council recognizes that certain Horizons of New Mexico members are capable of performing the services listed below, said services are considered permissive and excluded from the mandatory aspect of the State Use Program. Any procurement of the below services through Horizons of New Mexico is at the discretion of the purchasing agent and will be considered by the Council on a case-by-case basis.

- Graphic Design
- Graphic Design - Logo Design
- IT – Enterprise Application
- IT – IV & V
- IT Network and Database Management
- IT Support
- IT Security Services
- IT – Web Design
- IT – Web Programmer
- Marketing
- Social Media Marketing
- Training Services

For the complete State Use service list, please go to: http://horizonsofnewmexico.org/services.html

6121 Indian School Rd. NE Suite 102, Albuquerque, NM 87110 | 505-345-1540 |
mloehman@horizonsofnewmexico.org

Docusign Envelope ID: A8FA310F-3FDD-45A1-A626-4376CC33201A

Signature: 

Email: xivigil@santafenm.gov

25-0201 New Mexico Healthcare Authority

Final Audit Report 2025-05-30

Created:	2025-05-29
By:	XAVIER VIGIL (xivigil@santafenm.gov)
Status:	Signed
Transaction ID:	CBJCHBCAABAAtq62hyAi2xEnOkuxXYdC_rVZbFBeUIHL

"25-0201 New Mexico Healthcare Authority" History

Document created by XAVIER VIGIL (xivigil@santafenm.gov)
2025-05-29 - 10:09:24 PM GMT- IP address: 63.232.20.2

Document emailed to XAVIER VIGIL (xivigil@santafenm.gov) for signature
2025-05-29 - 10:11:49 PM GMT

Document e-signed by XAVIER VIGIL (xivigil@santafenm.gov)
Signature Date: 2025-05-29 - 10:12:37 PM GMT - Time Source: server- IP address: 63.232.20.2

Document emailed to Alan Webber (amwebber@santafenm.gov) for signature
2025-05-29 - 10:12:39 PM GMT

Email viewed by Alan Webber (amwebber@santafenm.gov)
2025-05-29 - 10:41:14 PM GMT- IP address: 140.248.0.1

Document e-signed by Alan Webber (amwebber@santafenm.gov)
Signature Date: 2025-05-30 - 2:11:43 AM GMT - Time Source: server- IP address: 174.242.130.153

Document emailed to ANDREA SALAZAR (asalazar@santafenm.gov) for signature
2025-05-30 - 2:11:45 AM GMT

Email viewed by ANDREA SALAZAR (asalazar@santafenm.gov)
2025-05-30 - 2:13:32 AM GMT- IP address: 76.26.101.206

Document e-signed by ANDREA SALAZAR (asalazar@santafenm.gov)
Signature Date: 2025-05-30 - 2:13:43 AM GMT - Time Source: server- IP address: 76.26.101.206

Document sent to BRIAN MOYA (bjmoya@santafenm.gov), Julie Rasmussen (jkrasmussen@santafenm.gov) and STEN JOHNSON (sajohnson@santafenm.gov). One of them to acknowledge receipt
2025-05-30 - 2:13:45 AM GMT

Email viewed by BRIAN MOYA (bjmoya@santafenm.gov)
2025-05-30 - 2:45:54 AM GMT- IP address: 98.97.116.185

Powered by Adobe Acrobat Sign

Email viewed by STEN JOHNSON (sajohnson@santafenm.gov)

2025-05-30 - 1:34:59 PM GMT- IP address: 104.47.64.254

Document receipt acknowledged by STEN JOHNSON (sajohnson@santafenm.gov)

Receipt Acknowledgement Date: 2025-05-30 - 1:35:39 PM GMT - Time Source: server- IP address: 63.232.20.2

Agreement completed.

2025-05-30 - 1:35:39 PM GMT

Signature: ERIKA LUJAN
ERIKA LUJAN (Dec 10, 2025 09:00:33 MST)

Email: evlujan@santafenm.gov

CITY OF SANTA FE

The Purchasing Memo

Date: December 23, 2025

To: Governing Body, Finance Committee, and Public Works & Utilities Committee

From: Daniel Garcia, Fire Fleet Manager Daniel Garcia

Via: Scott Ouderkirk, Interim Fire Chief SCOTT OUDERKIRK

Subject: Ferrara HD77 Ladder/Quint and equipment

Vendor Name: 411 Equipment LLC

Munis Vendor Number: 8725

ITEM AND ISSUE:

Fire Department respectfully requests your approval to purchase a Ferrara HD77 Ladder/Quint and equipment totaling $1,670,000.00 with 411 Equipment, LLC.

CONTRACT NUMBER:

NA – utilizing CES Contract #2024-25-C115-All.

BACKGROUND AND SUMMARY:

The City of Santa Fe Fire Department received a grant award (Item #25-0499, Appropriation #25-J3149) in the amount of $1,900,000.00 from The State of New Mexico, Department of Finance & Administration (DFA). Fire Department requests to purchase a new Ferrara HD77 Ladder/Quint and equipment. This new apparatus will replace the current aged-out unit which has high mileage due to heavy utilization in the field. The new apparatus will provide service to the City of Santa Fe. Fire Department will purchase the apparatus from 411 Equipment, LLC. located in Albuquerque.

PRIOR APPROVALS AND SUPPORTING INFORMATION:

FUNDING SOURCE:

Fund Name/Number: Emergency Services/Fund 221

Munis Org Name/Number: Fire Support Services/2210181

Munis Object Name/Number: Vehicles > 1.5 Tons/571000

Budget Officer / Designee: Andy Hopkins **Date:** 01/05/2026

Budget Officer Comment/Exceptions: _____

PROCUREMENT METHOD:

The procurement method used was NMSA 1978, Section 13-1-135, Coop

The existing contract number 2024-25-C115-ALL expires on 05/21/2028.

Chief Procurement Officer (CPO)/Designee: _____ **Date:** 01/12/2026

CPO Comment/Exceptions: _____

ASSOCIATED APPROVALS:

IT Components included? ☐ Yes | ☒ No

Approval: NA **Title:** _____ **Date:** _____

Comment/Exceptions: _____

Treasury/Point of Sale Components included? ☐ Yes | ☐ No

Approval: NA **Title:** _____ **Date:** _____

Comment/Exceptions: _____

Vehicles included? ☒ Yes | ☐ No

Approval: Daniel Garcia **Title:** Fire Fleet Manager **Date:** 12/12/2025

Comment/Exceptions: _____

Construction to City Facilities, Furniture, and/or Fixtures included? ☐ Yes | ☒ No

Approval: NA **Title:** _____ **Date:** _____

Comment/Exceptions: _____

Is this an externally funded purchase? ☒ Yes | ☐ No

If yes, what is the issuing agency: _____

Approval: ERIKA LUJAN ERIKA LUJAN (Jan 12, 2026 08:33:48 MST) **Title:** Grants Manager **Date:** 01/12/2026

Comment/Exceptions: _____

Is this a Capital Asset or Project? ☒ Yes | ☐ No

Project Ledger Number: FIR2622111

Approval: Rebecca Lovato-Sanowong **Title:** Accounting Manager **Date:** 01/12/2026

Comment/Exceptions: _____

ATTACHMENTS:

Horizons declination
Vendor's Quote
Procurement document: Coop Master Agreement #2024-25-C115-All
Fully Executed City_of_Santa_Fe_25-J3149
Certificate of Liability Insurance (COI)
Los Ranchos_2024 License 411 Equipment LLC
411 Equipment W-9 10_02_2025

411 Equipment, LLC
"Be in the Know"
1815 4th Street NW, Albuquerque, NM 87102
(505) 280-9143 Phone

December 15, 2025

FIRE APPARATUS PROPOSAL

A.C. Brian Moya

Santa Fe Fire Department

We hereby propose to furnish the following Ferrara HD77 Ladder/Quint and equipment, as described by the accompanying detailed specifications via our CES Contract #2024-25-C115-ALL. The apparatus and equipment will be delivered F.O.B., Santa Fe, NM within 410 calendar days from receipt of an order. Payment is due upon receipt of apparatus. The pricing in this proposal is valid through February 28, 2026 and may be extended, in writing, at the discretion of 411 Equipment LLC. I have attached a copy of our CES contract.

ITEM	DESCRIPTION	PRICE
1	CES-06 Ferrara HD77 Ladder on an Inferno Chassis, $1,883,402.00, Less Fleet Discount of ($203,402.00)	**$1,670,000.00**

Please let me know if you have any questions.

Thank you for the opportunity,

Pete Marquez, Jr,
General Manager/Owner

Services Offered to the City of Santa Fe (FY26)

Approved:
These services have been approved by the New Mexico Council for Purchasing from Persons with Disabilities and are available through Horizons of New Mexico.

- ADA Accessibility Consulting Services
- Auctioneering Services
- Bulk Mailing and Sorting
- Call Center Services
- Computer Refurbishing
- Courier Services
- Decontamination, Sanitation and Sterilization Services
- Debris Removal
- Document Imaging
- Document Shredding
- Envelope Stuffing
- General Labor
- Hard Drive Destruction
- Janitorial and Housekeeping Services – Including Carpet Cleaning & Floor Care
- Landscape Irrigation
- Landscaping
- Mailing Services
- Management of an Assistive Technology Reuse and Recycling Program
- Medical Waste Disposal
- Meeting Minute Preparation Services
- Pest Control and Extermination Services
- Printing Services
- Rest Area Maintenance
- Screen Printing
- Snow Removal
- Temporary Staffing Services
- Yard, Grounds, and Lawn Maintenance

Permissive:
The services have been approved by the New Mexico Council for Purchasing from Persons with Disabilities as permissible for sale under the State Use Act through Horizons of New Mexico. While the Council recognizes that certain Horizons of New Mexico members are capable of performing the services listed below, said services are considered permissive and excluded from the mandatory aspect of the State Use Program. Any procurement of the below services through Horizons of New Mexico is at the discretion of the purchasing agent and will be considered by the Council on a case-by-case basis.

- Graphic Design
- Graphic Design - Logo Design
- IT – Enterprise Application
- IT – IV & V
- IT Network and Database Management
- IT Support
- IT Security Services
- IT – Web Design
- IT – Web Programmer
- Marketing
- Social Media Marketing

For the complete State Use service list, please go to: http://horizonsofnewmexico.org/services.html

Outlook

RE: Service Determination Request for Fire Dept Apparatus, Ladder 7

From DUTTON-LEYDA, TRAVIS K. <tkduttonleyda@santafenm.gov>
Date Thu 12/18/2025 5:03 PM
To CANDELARIA MARTINEZ, TONIETTE O. <tocandelariamartinez@santafenm.gov>; Procurement/Purchasing <ProcurementPurchasing@santafenm.gov>
Cc VELARDE, VICTORIA E. <vevelarde@santafenm.gov>; MOYA, BRIAN J. <bjmoya@santafenm.gov>

Greetings,
Based on the provided scope of work, it has been classified as General Services. This determination is solely focused on that classification and does not address whether the scope of work or procurement method complies with all relevant legal requirements. I reserve the right to modify this determination should the scope of work differ from what was originally submitted. The procurement must follow the processes and procedures established by the City of Santa Fe, Central Purchasing, the Procurement Manual, and applicable state statutes.
Please note:

- Save this email as a PDF and upload it into the corresponding packet and Munis records.
- Check with WorkQuest dba Horizons of New Mexico (vendor # 8673) (mloehman@horizonsofnewmexico.org) ***if*** this service appears on their approved list.
- If your request includes anything that needs to be reviewed and preapproved by another City Department/Division, please send the same SOW to the corresponding email address and include their response in your packet/Munis.
- If your request includes anything that needs to be reviewed and preapproved by another City Department/Division, please send the same SOW to the corresponding email address and include their response in your packet/Munis.
    - Treasury (Point of Sale Systems) – questions: drsena@santafenm.gov; clromero@santafenm.gov. Request signature from: clromero@santafenm.gov
    - IT components (everything IT) – questions: ereview@santafenm.gov. Request signature from: edcandelaria@santafenm.gov;
      Copy: zxdushdurova@santafenm.gov; lenobes@santafenm.gov; lfworstell@santafenm.gov
    - Vehicles – questions: fleet@santafenm.gov. Request signature from: dmjaramillo@santafenm.gov
    - Grants – questions: grants@santafenm.gov. Request signature from: evlujan@santafenm.gov
    - Construction, Facilities, Furniture, Fixtures, Equipment, etc. – questions: fmdreview@santafenm.gov. Request signature from: jsburnett@santafenm.gov
    - Emergency Related Purchases – questions oem@santafenm.govand. Request signature from: klmorgan@santafenm.gov
    - Asset over $5k – questions: accountspayable@santafenm.gov. Request signature from: jxbolden@santafenm.gov

- Ensure that the current and appropriate templates and forms are used, they can be found on the intranet https://intranet.santafenm.gov/finance_1 and OpenGov https://procurement.opengov.com/governments/1784201/projects and documented procedures/laws/rules are followed.
- > $20k per year, when processing this procurement, please ensure the procurement number issued by Munis and the procurement name are used in the appropriate documents and the subject of emails.
- If you are processing a procurement where the forecasted amount is =/> $60k, per NMSA 1978, Section 13-1-102, the procurement method must be ITB (if you choose not to use a cooperative or an existing contract). If you feel you need to process an RFP, you must get an Authorization and Plan approved before you process.
- < $20k per year, one quote is acceptable.
- From $20k to $60k per year, if you aren't using a cooperative or existing contract, you must provide 3 quotes in your req. Must use the Munis Bid Module, OpenGov, or Pavilion.
- **Identify your funding source and notify Purchasing.**
  It's essential to determine the funding source early, as it impacts the required documentation and contract language. For example, if federal funds are being used, specific federal provisions must be included in both the procurement request and the resulting contract. Notifying Purchasing of the funding source upfront ensures compliance and avoids delays.
- Follow the link below to review existing price agreements, contracts, or cooperative agreements that might be applicable to this request. You might be able to use an existing price agreement/contract to save time and money.
- Pavilion: Free Cooperative Contract Search for Governments (please work with Purchasing if you think you found an existing or cooperative contract that might work)
- Submit via **Submit Purchase Requests** or the appropriate email address:
- Determination requests to purchasing_det@santafenm.gov
- All other requests to purchasing@santafenm.gov

Thank you for submitting this scope of work for my review.

Book time to meet with me

Regards,
Travis Dutton-Leyda, City of Santa Fe Chief Procurement Officer
200 Lincoln Avenue
Santa Fe, NM 87501
505-629-8351
tkduttonleyda@santafenm.gov

Vendor Registration Sites and Current Procurement Opportunities:
[Current for Finances Only] https://santafenm.munisselfservice.com/vss/
[We Are Live With OpenGov] https://procurement.opengov.com/portal/santafenm
[Current] https://www.withpavilion.com/
Internal Link: https://intranet.santafenm.gov/central_purchasing_division_cpd

CITY OF SANTA FE
FINANCE

"A journey of a thousand miles begins with a single step" ~ Lao Tzu

From: CANDELARIA MARTINEZ, TONIETTE O. <tocandelariamartinez@santafenm.gov>
Sent: Wednesday, December 10, 2025 10:46 AM
To: Procurement/Purchasing <ProcurementPurchasing@santafenm.gov>
Cc: VELARDE, VICTORIA E. <vevelarde@santafenm.gov>; MOYA, BRIAN J. <bjmoya@santafenm.gov>
Subject: Service Determination Request for Fire Dept Apparatus, Ladder 7
Importance: High

Good morning,
Requesting determination for services to purchase a transmission for Fire apparatus, Ladder 7. Attached is the quote. Please let me know if you need more information.

Thank you,

Toniette Candelaria Martinez
Fiscal Administrator
505-955-3109
200 Murales Road
Santa Fe, NM 87501
www.santafenm.gov/fire-department

From: GARCIA, DANIEL A. <dagarcia@santafenm.gov>
Sent: Wednesday, December 10, 2025 10:05 AM
To: CANDELARIA MARTINEZ, TONIETTE O. <tocandelariamartinez@santafenm.gov>
Cc: MOYA, BRIAN J. <bjmoya@santafenm.gov>; VELARDE, VICTORIA E. <vevelarde@santafenm.gov>
Subject: FW: Digital Document

Here is the quote for the transmission on L-7 please process

From: Charles Rawson <c.rawson@kirbycorp.com>
Sent: Wednesday, December 10, 2025 9:46 AM
To: GARCIA, DANIEL A. <dagarcia@santafenm.gov>
Subject: FW: Digital Document

CAUTION: This email originated from outside of the organization. Do not click links or open attachments unless you recognize the sender and know the content is safe.

You will get the core back

Charles W Rawson II
Manager

Desk: 505-831-7523
Cell: 505-980-8603
Email: c.rawson@kirbycorp.com

From: NMALBSRV02 <scanner@kirbycorp.com>
Sent: Thursday, December 11, 2025 11:26 AM
To: Charles Rawson <c.rawson@kirbycorp.com>
Subject: Digital Document

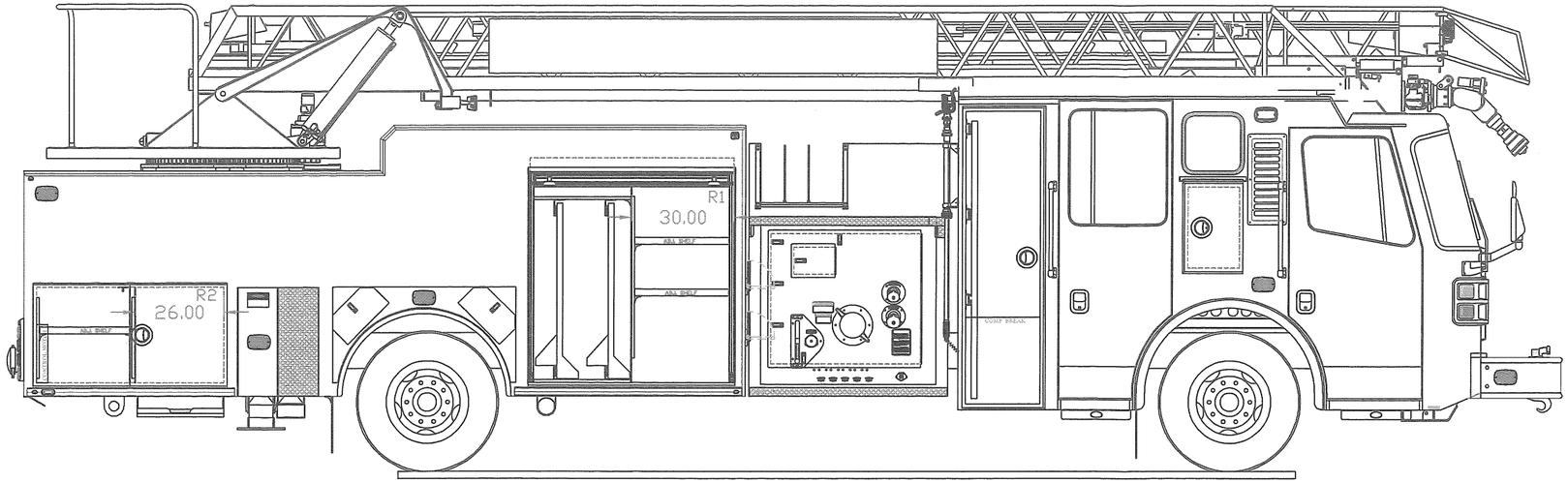

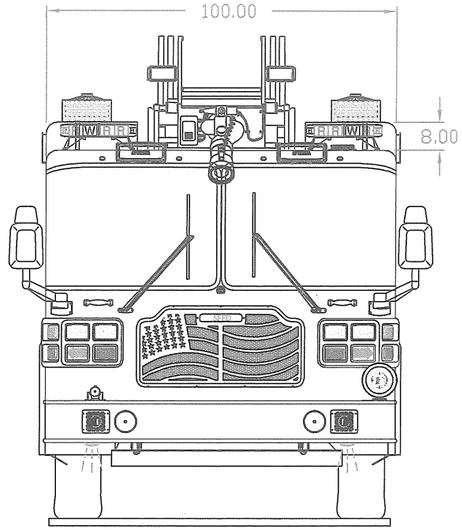

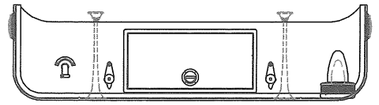

COMPARTMENT DIMENSIONS		
COMPT.	OPENING	INTERIOR
L1	57.50W X 57.75H	60W X 66.25H X 24D
L2	33.50W X 25.50H	36W X 38.00H X 24D
L3	39.50W X 17.50H	42W X 30.00H X 24D
L4	29.00W X 49.75H	31W X 58.25H X 24D
R1	57.50W X 57.75H	60W X 66.25H X 24D
R2	55.00W X 28.00H	55W X 28.00H X 24D

IT IS UNLAWFUL TO COPY OR REPRODUCE ANY OR ALL OF THIS DRAWING WITHOUT THE WRITTEN PERMISSION OF FERRARA FIRE APPARATUS. ANY UNAUTHORIZED REPRODUCTION WILL RESULT IN PROSECUTION TO THE FULLEST EXTENT OF THE LAW. DIMENSIONS AND ITEM LOCATIONS ARE APPROXIMATE AND ARE SUBJECT TO DEVIATIONS THAT MAY OCCUR OR BE NECESSARY DURING CONSTRUCTION. SOME DETAILS MAY NOT BE SHOWN.

QTY	MAKE	MODEL
1	ALCO-LITE 10' FOLDING ATTIC	FL-10
2	ALCO-LITE 16' ROOF	PRL-16
1	ALCO-LITE 14' COMBINATION	CJL-14
1	ALCO-LITE 24' 2-SECTION EXTENSION	PEL-24
1	ALCO-LITE 35' 3-SECTION EXTENSION	PEL3-35
2	12' FIBERGLASS PIKE POLE	
2	8' FIBERGLASS PIKE POLE	
2	6' FIBERGLASS PIKE POLE	

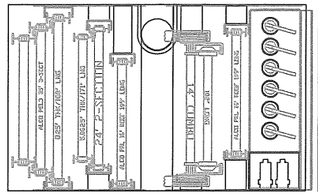

SCALED X2

CUSTOMER APPROVAL

NAME: Daniel Garcia
BY:
TITLE: Fire Fleet Manager
DATE: 6-3-24

DRAWING IS A VISUAL REPRESENTATION OF A SPECIFIED APPARATUS. IN THE EVENT OF DISCREPANCIES BETWEEN SPECIFICATIONS AND DRAWING, THE SPECIFICATIONS SHALL PREVAIL. DRAWING IS FOR REFERENCE ONLY. SOME DETAILS MAY NOT BE SHOWN OR NOTED.

FERRARA

CITY OF SANTA FE, NM
JOB NO.: H7347
1,500 GPM WATEROUS CSU PUMP
500 GALLON WATER TANK
20 GALLON FOAM TANK

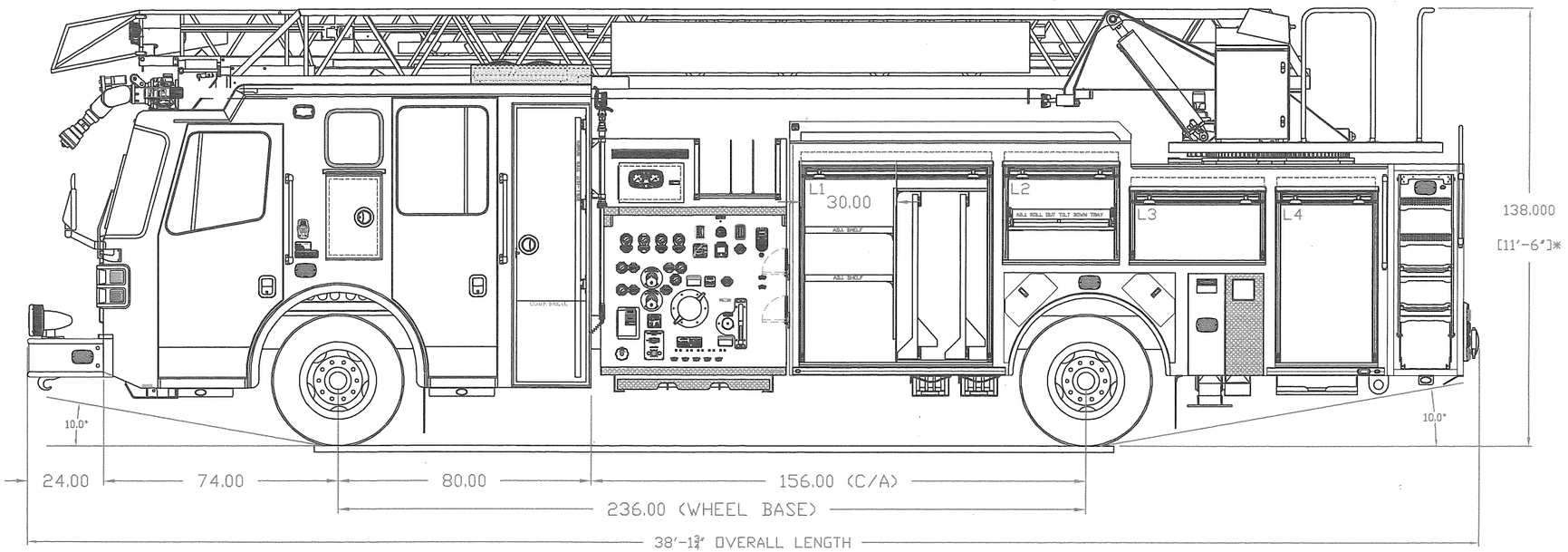

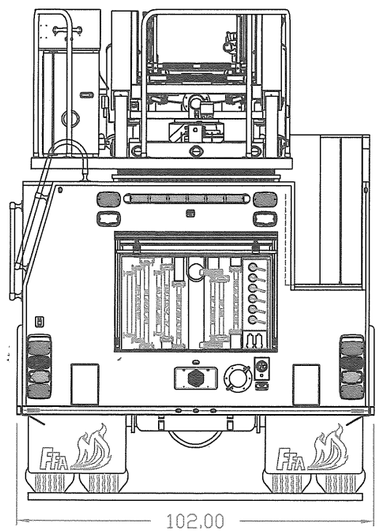

05-31-2024 APPROVAL (EA)

*HEIGHT COULD VARY +/- 2" BASED ON LOADING OF VEHICLE

CITY OF SANTA FE FIRE DEPARTMENT
CAB DASH LAYOUT APPROVALS
FERRARA INFERNO CHASSIS
H7347

FERRARA

CUSTOMER APPROVAL

NAME:
BY:
TITLE:
DATE:

DRAWING IS A VISUAL REPRESENTATION OF A SPECIFIED APPARATUS. IN THE EVENT OF DISCREPANCIES BETWEEN SPECIFICATIONS AND DRAWING, THE SPECIFICATIONS SHALL PREVAIL. DRAWING IS FOR REFERENCE ONLY. SOME DETAILS MAY NOT BE SHOWN OR NOTED.

DRIVER'S SIDE LEFT KNEE

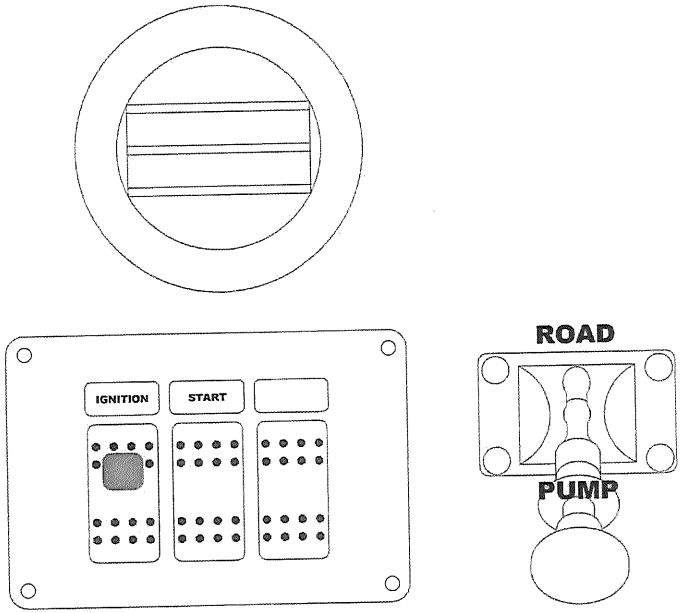

DRIVER'S SIDE RIGHT KNEE

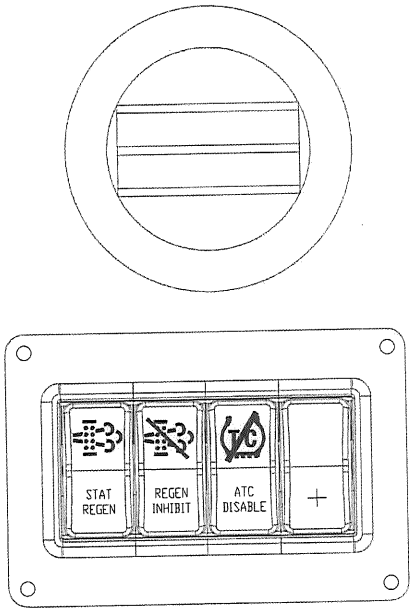

FERRARA

CITY OF SANTA FE FIRE DEPARTMENT
CAB DASH LAYOUT APPROVALS
FERRARA INFERNO CHASSIS
H7347

CUSTOMER APPROVAL

NAME: _____

BY: _____

TITLE: _____

DATE: _____

DRAWING IS A VISUAL REPRESENTATION OF A SPECIFIED APPARATUS. IN THE EVENT OF DISCREPANCIES BETWEEN SPECIFICATIONS AND DRAWING, THE SPECIFICATIONS SHALL PREVAIL. DRAWING IS FOR REFERENCE ONLY. SOME DETAILS MAY NOT BE SHOWN OR NOTED.

DRIVER'S DASH PANEL (ZONE D4)

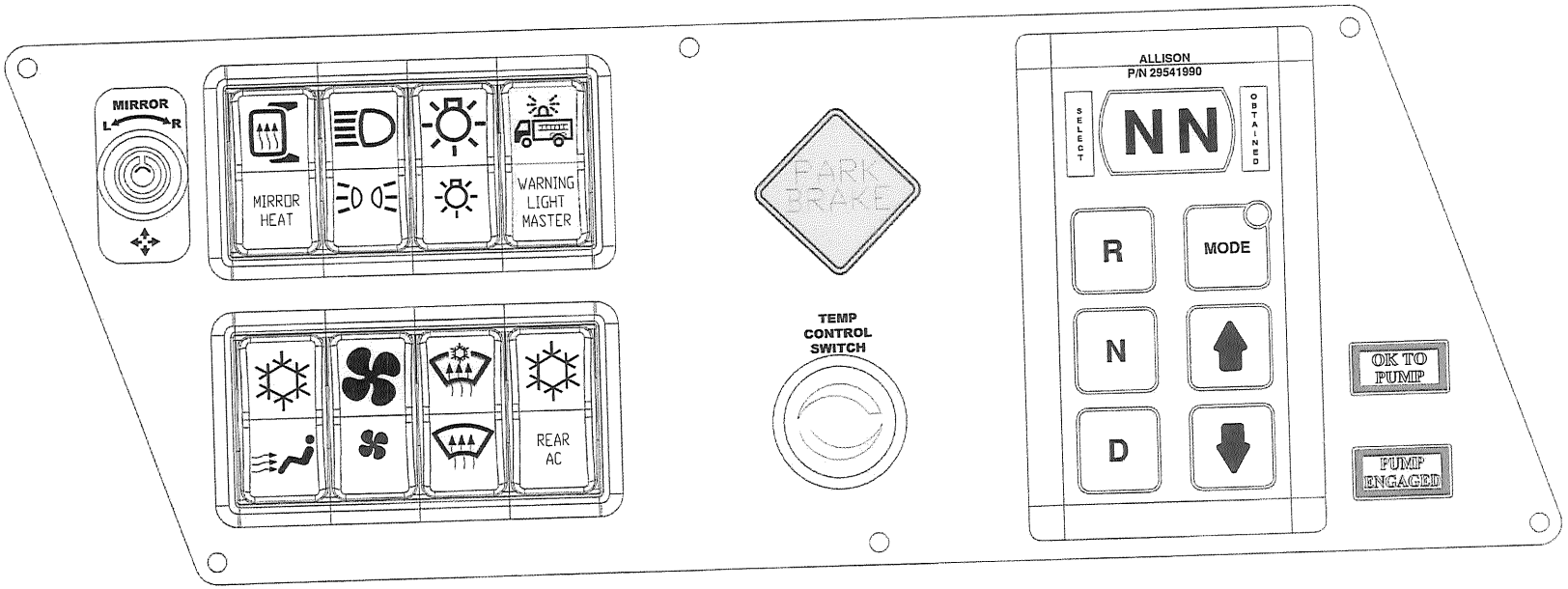

FERRARA

CITY OF SANTA FE FIRE DEPARTMENT
CAB DASH LAYOUT APPROVALS
FERRARA INFERNO CHASSIS
H7347

CUSTOMER APPROVAL

NAME:
BY:
TITLE:
DATE:

DRAWING IS A VISUAL REPRESENTATION OF A SPECIFIED APPARATUS. IN THE EVENT OF DISCREPANCIES BETWEEN SPECIFICATIONS AND DRAWING, THE SPECIFICATIONS SHALL PREVAIL. DRAWING IS FOR REFERENCE ONLY. SOME DETAILS MAY NOT BE SHOWN OR NOTED.

CENTER DASH PANEL (ZONE D5)

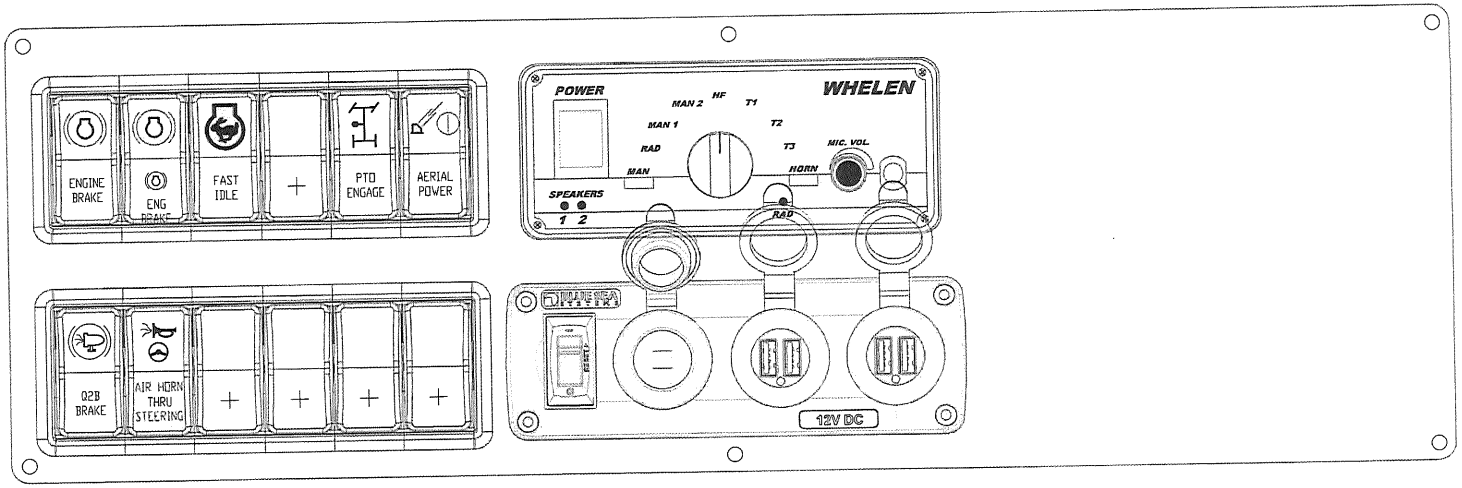

FERRARA

CITY OF SANTA FE FIRE DEPARTMENT
CAB DASH LAYOUT APPROVALS
FERRARA INFERNO CHASSIS
H7347

CUSTOMER APPROVAL

NAME: _____

BY: _____

TITLE: _____

DATE: _____

DRAWING IS A VISUAL REPRESENTATION OF A SPECIFIED APPARATUS. IN THE EVENT OF DISCREPANCIES BETWEEN SPECIFICATIONS AND DRAWING, THE SPECIFICATIONS SHALL PREVAIL. DRAWING IS FOR REFERENCE ONLY. SOME DETAILS MAY NOT BE SHOWN OR NOTED.

OFFICER'S DASH PANEL (ZONE D6)

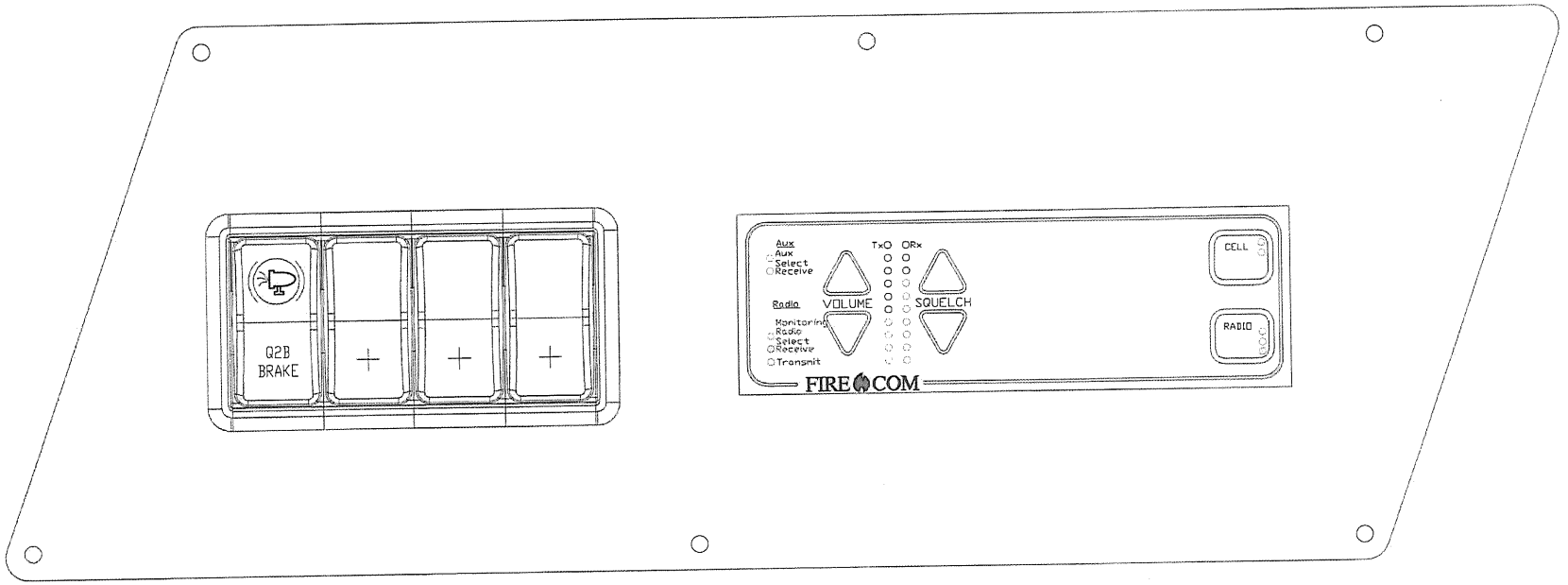

FERRARA

CITY OF SANTA FE FIRE DEPARTMENT
CAB DASH LAYOUT APPROVALS
FERRARA INFERNO CHASSIS
H7347

CUSTOMER APPROVAL

NAME: _____

BY: _____

TITLE: _____

DATE: _____

DRAWING IS A VISUAL REPRESENTATION OF A SPECIFIED APPARATUS. IN THE EVENT OF DISCREPANCIES BETWEEN SPECIFICATIONS AND DRAWING, THE SPECIFICATIONS SHALL PREVAIL. DRAWING IS FOR REFERENCE ONLY. SOME DETAILS MAY NOT BE SHOWN OR NOTED.

DRIVER'S OVERHEAD PANEL (ZONE U1 / U2)

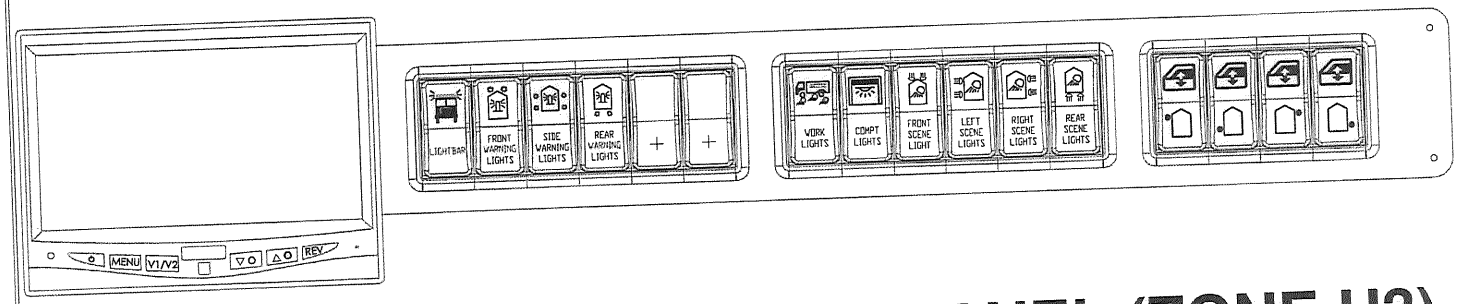

DOOR AJAR, INFORMATION & VDR DISPLAY

CENTER OVERHEAD PANEL (ZONE U3)

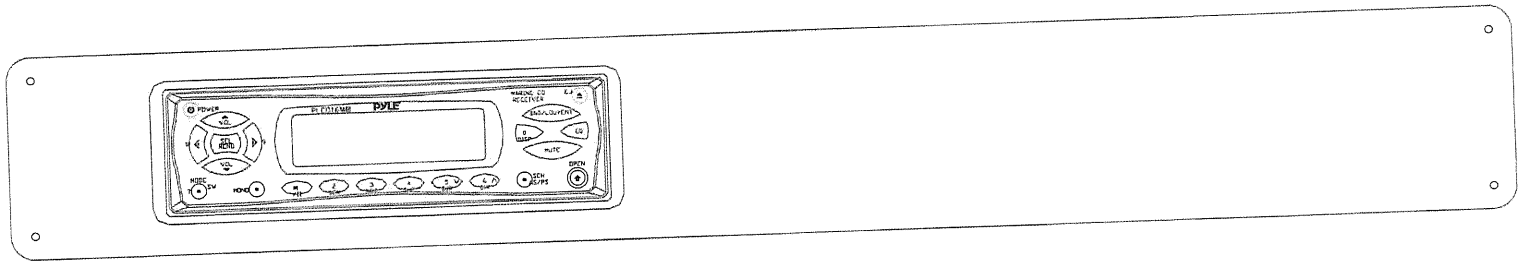

FERRARA

CITY OF SANTA FE FIRE DEPARTMENT
CAB DASH LAYOUT APPROVALS
FERRARA INFERNO CHASSIS
H7347

CUSTOMER APPROVAL

NAME: [signature]
BY:
TITLE:
DATE:

DRAWING IS A VISUAL REPRESENTATION OF A SPECIFIED APPARATUS. IN THE EVENT OF DISCREPANCIES BETWEEN SPECIFICATIONS AND DRAWING, THE SPECIFICATIONS SHALL PREVAIL. DRAWING IS FOR REFERENCE ONLY. SOME DETAILS MAY NOT BE SHOWN OR NOTED.

OFFICER'S OVERHEAD PANEL (ZONE U4)

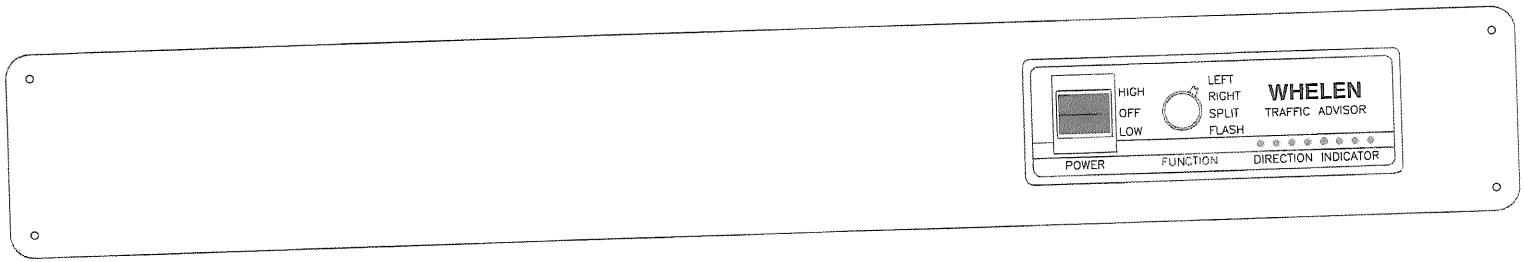

FERRARA

CITY OF DANVILLE FIRE DEPARTMENT
CAB DASH LAYOUT APPROVALS
FERRARA INFERNO CHASSIS
H7255

CUSTOMER APPROVAL

NAME: Dan
BY:
TITLE:
DATE:

DRAWING IS A VISUAL REPRESENTATION OF A SPECIFIED APPARATUS. IN THE EVENT OF DISCREPANCIES BETWEEN SPECIFICATIONS AND DRAWING, THE SPECIFICATIONS SHALL PREVAIL. DRAWING IS FOR REFERENCE ONLY. SOME DETAILS MAY NOT BE SHOWN OR NOTED.

PAINT APPROVAL

Production Number:	H7347
Customer:	City of Sante Fe, NM
Chassis Manufacturer:	Ferrara
Chassis Model:	Inferno

CAB PAINT

	Cab Primary Color		Cab Upper Color
Paint Brand	Sikkens	Paint Brand	Sikken
Color	Red	Color	White
Paint Code	FLNA 31979	Paint Code	FLNA 41477
Paint Break Line	Match Current Units		

BODY PAINT

	Body Primary Color		Body Upper Color
Paint Brand	Sikkens	Paint Brand	N/A
Color	Red	Color	N/A
Paint Code	FLNA 31979	Paint Code	N/A
Paint Break Line	N/A		

AERIAL PAINT

	Aerial Color		
Paint Brand	Sikkens		
Color	White		
Paint Code	FLNA 41479		

Customer

CHEVRON APPROVAL

Production Number:	H7347
Customer:	City of Sante Fe, NM
Chassis Manufacturer:	Ferrara
Chassis Model:	Inferno

Chevron Brand (Rear):	3M
Color:	Red
Color:	Lime Green

Customer Approval

Contract Award Letter

May 22, 2024

411 Equipment LLC
1815 4th Street Northwest
Albuquerque, NM 87102

RFP NUMBER: 2024-25
RFP DESCRIPTION: Truck Bodies
CONTRACT NUMBER: 2024-25-C115-ALL
Category 1 - Lot 1 - Truck Bodies

Dear Procurement Partner

Cooperative Educational Services (CES) thanks you for responding to our 2024-25 solicitation. The responses have been reviewed and it is our pleasure to inform you that your company has been selected to provide the products and services indicated in your response.

The Contract, in conjunction with the Contract and RFP documents, constitute the Agreement between the parties. Please retain all documents for your records. This Indefinite Delivery and Indefinite Quantity contract, as defined in NMSA 13-1-63; beginning May 22, 2024 and expiring May 21, 2028, pursuant to 13-1-150 NMSA.

It is the vendor's responsibility to keep pricing up to date throughout the life of the contract.

Sincerely yours,

Cooperative Educational Services

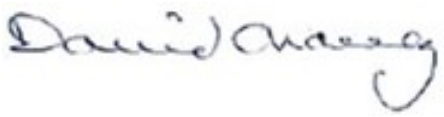

David Chavez
Executive Director, Chief Procurement Officer
Office: 505.344.5470

ACCEPTANCE OF PROPOSAL AND OFFER
AND CONTRACT AWARD

RFP NUMBER: 2024-25
RFP DESCRIPTION: Truck Bodies
CONTRACT NUMBER: 2024-25-C115-ALL
Category 1 - Lot 1 - Truck Bodies

CONTRACT

This contract award is being made by Cooperative Educational Services ("CES"), 10601 Research Rd. SE, Albuquerque, New Mexico 87123 effective this 22nd day of May 2024, to 411 Equipment LLC, with its principal office located at 1815 4th Street Northwest, Albuquerque, NM 87102, pursuant to the above referenced CES conducted Request for Proposal ("RFP") or Request for Bids ("RFB") procurement, and Contract Holder accepts the award and enters into this contract pursuant to the following terms and conditions.

RECITALS

Cooperative Educational Services (CES) is a cooperative procurement agency created by a Joint Powers Agreement as authorized by Section 11-1-1, et. seq., N.M.S.A., 1978, and Section 13-1-135 and procures tangible personal property, services and construction services ("Products, Services and/or Construction Services") pursuant to the New Mexico Procurement Code for the benefit of its Members and Participating Entities. The Members consist of public educational institutions in New Mexico that are signators to a Joint Powers Agreement establishing CES as their procurement agency. The Participating Entities are governmental and 501(C) (3) organizations that have entered into Participating Entity Agreements with CES which allow them to take advantage of the procurement efforts of CES.

The undersigned ("Contract Holder") has successfully responded to a RFP or RFB published by CES in accordance with the Procurement Code, (13-1-103, 111, 112), and Contract Holder is being awarded this RFP or RFB contract by CES which allows Contract Holder to offer Products, Services and Construction Services in accordance with the terms and conditions set forth herein and in the RFP or RFB documents and this contract award.

CONTRACT TERMS

1. The initial contract term shall be from the effective contract award date May 22, 2024 through May 21, 2028. CES reserves the right to renew the Contract through a written amendment signed by all required signatories, but in any case, the Contract shall not exceed the total number of years allowed pursuant to NMSA 1978 13-1-150. CES reserves the right to offer month-to-month extensions if it is determined by CES to be in the best interest of CES Members/Participating Entities

2. Contract Holder agrees and acknowledges that the contract terms and provisions are those contained in the above referenced RFP or RFB and agrees to furnish all Products, Services and/or Construction Services in compliance with all terms, conditions, specifications of and amendments to this RFP or RFB. Contract Holder understands that his obligations under this RFP or RFB contract extend to CES Members and Participating Entities who are third party beneficiaries of

this RFP or RFB procurement process. The Members/Participating Entities may negotiate with Contract Holder certain additional terms and conditions relating to the scope of services and other performance details. However, the terms and conditions of the RFP or RFB may not be altered or amended except with the approval of CES and in accordance with the State Procurement Code.

3. Contract Holder acknowledges and agrees that CES' purpose and function is to act as a cooperative procurement agent on behalf of its Members and Participating Entities so that they may take advantage of these procurement efforts. CES does not have any subsequent responsibility relating to the quality and fitness of any Products, or the performance of any Services and Construction Services by Contract Holder. Any purchase orders placed by a CES Member or Participating Entity with Contract Holder directly or through CES and any resulting contract between the Contract Holder and a CES Member or Participating Entity do not create any additional obligations on the part of CES.

4. For transactions which involve CES transmitting purchase orders from a Member/Participating Entity to Contract Holder, CES volunteers to act as a payment facilitator to make payments to Contract Holder with funds transferred to CES by the Member/Participating Entity in accordance with Member/Participating Entity's written instructions and to provide an accounting of all monies paid or received by CES pursuant to this Agreement. CES also volunteers to provide informal mediation services between Contract Holder and Member/Participating Entity in the event any dispute arises between them.

5. Contract Holder understand and agree that upon CES' receipt of funds from the Member/Participating Entity, CES has no right or authority to thereafter apply those funds to any purpose other than as instructed by Member/Participating Entity. CES shall incur no liability to Contract Holder except for liability arising from CES' own gross negligence or willful misconduct, to the extent allowed by New Mexico law. Through this procurement process, Contract Holder is authorized to provide the described Products, Services or Construction Services. CES has no obligation or right to involve itself with the manner or method by which Contract Holder provides these Products, Services or Construction Services.

6. To the extent allowed by New Mexico law, Contract Holder agrees to hold CES harmless from all costs, expenses, attorney fees and judgments based upon claims between a Member/Participating Entity and Contract Holder in connection with the specified Products, Services or Construction Services provided by Contract Holder

7. Contract Holder agrees that it will not assert any claim against CES in the event that a dispute arises regarding the alleged failure of Contract Holder or a Member/Participating Entity to perform as provided for in the RFP or RFB documents, any purchase order or other contract between Contract Holder and a Member/Participating Entity. This does not include claims against CES based upon the alleged gross negligence or intentional acts of CES.

8. Any liability incurred in connection with this Agreement shall be subject to the immunities and limitations of the New Mexico Tort Claims Act, §§ 41-4-1 et seq, NMSA 1978, as amended.

The Recitals are incorporated herein as contract terms.

Agreed effective the above date.

Cooperative Educational Services

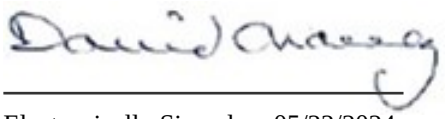

Electronically Signed on 05/22/2024

Executive Director

Date: 05/22/2024

411 Equipment LLC

Pete Marquez

Electronically Signed on 05/22/2024

Owner/GM/Managing Member

GENERAL SCOPE OF WORK AND SPECIFICATIONS

PART I INTRODUCTION

A. GENERAL

The purpose of this Request for Proposal is to solicit sealed proposals to establish, through competitive public solicitation and negotiation, a multi-year cooperative contract, or contracts, between Cooperative Educational Services (CES) and the successful Offeror(s).

In order to assist CES Members or Participating Entities which consist of over 440 educational and governmental entities in New Mexico, CES is seeking proposals from Offeror(s) who have the experience and can provide all types of truck bodies for Class 1 to Class 8 truck chassis and cutaway van; parts and accessories; maintenance and repair services; and warranty service and repairs.

It is the intent of CES to establish a contract with multiple vendors who can supply the desired items and services listed above and throughout this Scope of Work, for direct purchase, and as needed. All vehicles and services are to be supplied according to industry standards, according to the material manufacturers' recommendations and to the satisfaction of CES' Membership. Selected Contractors shall provide the items, and/or services as requested by the Member's Representative or their designee. CES or its Membership offers no guarantee of products or services to be purchased under the Contract.

B. NOTICE

If practicable, CES intends to make multiple awards for sufficient coverage statewide. Price agreements` term, resulting from this RFP, are pursuant to New Mexico Procurement Code, NMSA, 1978, 13-1-150.

This is an open-ended RFP. At the discretion of CES, the RFP may remain open for accepting additional proposals after a source award or multiple source awards are made to allow CES to make additional source awards if CES determines in accordance with ¶13-1-154 NMSA 1978 that such additional awards are necessary to fully meet CES member or participating entity service or economy needs identified by CES prior to a source award(s) or identified after a source award(s) is made. Any new Offeror may not have access to any RFP documents submitted by another Offeror or to documents involved in the rating or ranking process of Offerors, as this would negate the open and fair competition process. Offerors that submitted a proposal for this RFP event and did not receive a recommendation for award may not submit a new proposal for the same RFP event. New proposals will be evaluated as prescribed in the original RFP and evaluated against all other RFP proposals. Any new source awards will be aligned with the contract end date of the original source awards. CES reserves the right to terminate the opportunity for submittal of additional offers at any time prior to the original contract award expiration date.

C. DEFINITIONS

Class: GVWR class ratings. “Light Duty Class” trucks and vans are: Class 1: 0 to 6000#; Class 2: 6001 to 10000#; "Medium Class" trucks are: Class 3: 10001-14000#; Class 4: 14001-16000#; Class 5: 16001¬19500#; Class 6: 19501-26000#. "Heavy Class" trucks are: Class 7: 26001-33000#; Class 8: over 33000#.
Dealer Prep: An amount or fee that the dealer charges to receive and prepare the purchase vehicle fordelivery to the customer.
EPA: Environmental Protection Agency
Factory Invoice: The actual invoice the manufacturer sends to the dealer for the vehicle.
FMCSR: Federal Motor Carrier Safety Administration
FMVSS: Federal Motor Vehicle Safety Standards
GVWR: Gross Vehicle Weight Rating; the maximum allowable weight of the fully loaded vehicle, permanufacturer, including liquids, passengers, cargo, and the tongue weight of any towed vehicle.
Insurance Institute for Highway Safety (IIHS): Tests new models by crashing them into an energy-absorbing, deformable barrier at 40 mph.
Manufacturer’s Suggested Retail Price (MSRP): The retail price of the new motor vehicle suggested by the manufacturer, including the retail delivered price for each accessory or item of optional equipment physically attached to the new motor vehicle at the time of delivery to the new motor vehicle dealer thatis not included in the retail price suggested by the manufacturer for the new motor vehicle.
National Highway Traffic Safety Administration (NHTSA): A federal agency that regulates safety featuresof vehicles and that crash tests new cars for front impact into a flat, rigid barrier at 35 mph, and side impact with the test car traveling 17 mph being hit broadside by another car traveling 34 mph.
NMDOT: New Mexico Department of Transportation
NMMVD: New Mexico Motor Vehicle Department
OEM: The original equipment manufacturer
Wholesale Price: The cost of the vehicle to the dealer minus the holdback, any factory incentives andrebates.
49CFR393: Parts and Accessories Necessary for Safe Operation
49CFR571: Federal Motor Vehicle Safety Standards

PART II SCOPE OF WORK AND SPECIFICATIONS

CES is seeking proposals from Offeror(s) who have the experience and can offer the products and services listed throughout this RFP, which can be configured and equipped to meet individual CES Members or Participating Entities’ needs.

The standards and specifications provided below are intended to establish minimum requirements for the Offeror and provide a general overview of the quality and type of products and services being requested. Always use the latest up to date versions of a standard, code, or specification.

A. GENERAL REQUIREMENTS

1. The Contractor is responsibility to keep current all required New Mexico Motor Vehicle Division licensing requirements during the term of the contract, and to furnish license copies at any time on request by CES, its Members or Participating Entities. If Contractor does not maintain current any required New Mexico Motor Vehicle Division licensing requirements, CES reserves the right to immediately terminate the contract.

2. All bodies shall be the new.
3. The Offeror will demonstrate that its facility(s) possesses the resources to supply and support the vehicles offered under this solicitation.
4. All billings and invoices must identify the CES purchase order number, complete description of vehicle with all associated options being billed, and include the name of the vehicle, model number and vehicle identification number.
5. The contractor shall include a copy of any manufacturers' order guide with this proposal. Upon request, the dealer will provide a copy of the order guide to any CES Member or Participating Entity wishing to purchase a vehicle.
6. The prices for all bodies shall be F.O.B. the Offeror's dealership, or any location within 100 miles of the dealership.
7. The Offeror will furnish a complete set of specifications for all bodies offered that include all weights, heights, widths, etc. and other information to assist in the evaluation process.
8. It shall be the responsibility of the Offeror to assure that all recall notices and other technical service bulletins or notifications from the factory are sent directly to the CES Member or Participating Entity in a timely manner.
9. All optional equipment and accessories shall be original equipment from the body manufacturer, or third party authorized by the body manufacturer and installed at the factory or by the dealer.
10. Any dealer provided option must be priced separately and may only be included if specifically ordered by the CES Member or Participating Entity. Under no conditions may a CES Member or Participating Entity be charged additional costs for items such as conveyance or document fees, or advertising surcharges.

B. DELIVERY

1. All bodies ordered must be delivered within 5 days of the quotes delivery date that has been accepted by a CES Member or Participating Entity. If a vehicle is delayed beyond the original quoted date, or if the delayed delivery is beyond the fiscal year (ending June 30th), CES with the agency approval, reserves the right to cancel the purchase order and the member agency will be under no obligation to select a different vehicle if the vendor is unable to deliver on time.
2. In the case of a delay, CES Member or Participating Entity needs to be notified within five (5) business days of notice from the manufacturer to Offeror. The CES Member or Participating Entitywill notify CES and the Offeror within seven (7) business days whether to proceed or cancel the order. CES, CES Member or Participating Entity will be under no obligation to select a different vehicle if the order is cancelled or to select a different vehicle if the contractor is unable to deliveron time.
3. All deliveries will be made Monday through Friday during normal business hours. Vendor will contact the CES Member or Participating Entity 72 hours prior to delivery to schedule a delivery time, location and date.
4. Offeror will provide owners with two (2) complete sets of operations and parts manuals and one (1) operational and parts manual in electronic format on CD-R, CD-RW, DVD-R or DVD-RW. If safety videos and handbooks are available, two (2) sets will be provided to the member at no coston CD-R, CD-RW, DVD-R or DVD-RW.
5. If required, Manufacturer's Certificate of Origin (MCO) or Manufacturer's Statement of Origin (MSO) needs to be provided to CES Member or Participating Entity after the Offeror receives payment from CES. All documents must show the legal name of the CES Member or ParticipatingEntity.

C. PRE-DELIVERY SERVICE

Each unit shall be DOT inspected and include the appropriate documentation and decal. In addition, each unit shall be equipped with the required fire extinguisher and reflective triangle kit.

1. Complete lubrication
2. Checking of all fluid levels to ensure that they are filled to manufacturers' specifications.

D. VEHICLE INSPECTION

1. Prior to acceptance by the ordering agency, each vehicle shall be subject to a complete inspection by CES Member or Participating Entity.
2. Inspection shall include, but not necessarily be limited to, conformity to the specifications, mechanical integrity, quality or workmanship and materials, and appearance defects.
3. If a body fails inspection, corrections shall be made within seven (7) calendar days or time as mutually agreed to by the CES Member or Participating Entity and contractor. After corrections are made, the normal inspection time will start fresh. All corrections shall be made without any inconvenience to CES Member or Participating Entity.

E. WARRANTY

1. At the minimum, warranties shall be the manufacturer's standard new vehicle warranty. All warranties shall begin when the vehicle is placed in service. It shall be the responsibility of the ordering CES Member or Participating Entity to notify the contractor when a vehicle is actually put in service.

F. EXTENDED WARRANTY OPTIONS

1. Offeror is encouraged to offer extended warranties for all major mechanical, electrical and electronic components to cover the member after the standard warranty has expired.
2. The terms, conditions, stipulation, exceptions, limitations and warrantee periods will be clearly identified.
3. The Offeror must provide all warrantee work, ongoing maintenance, have an inventory of parts and have access to specialized or custom parts within 72 hours.
4. The term of a warranty is extended by any period of time during which repair services are not available to the CES Member or Participating Entity because of any war, invasion, strike, fire, flood or other natural disaster.

G. SAFETY

1. The Offeror will provide, at no charge to the Member/Participating Entity, MSDS information providing asbestos content of friction materials (brake pads, brake shoes, clutch discs, etc.), upon request.
2. All bodies offered shall comply with most current for FMVSS standards if applicable.

H. EXTENDED WARRANTY OPTIONS

1. Offeror is encouraged to offer extended warranties for all major mechanical, electrical and electronic components to cover the member after the standard warranty has expired.
2. To cover parts, labor, and towing.

3. To include maintenance service plans.

4. The terms, conditions, stipulation, exceptions, limitations and warranty periods will be clearly identified.
5. Warranty and all terms, conditions, stipulation and warranty periods will be clearly identified to the CES Member or Participating Entity.

I. BODIES AND UTILITY BED OPTIONS

1. The Offeror is encouraged to propose a full line of bodies for various members' operations.
2. May include, but not be limited to: Stake beds, flatbed, box bodies, dump beds, lift beds, lift gates, rear and side loader garbage truck bodies, roll-off bodies, miscellaneous trash truck bodies, tanks bodies, component body, service bodies, van bodies, haulers, service and utility bodies landscaper, refuse bodies all types, mounted cranes or booms, refrigerated bodies, brush truck, custom designed bodies or bed, etc.
3. Third-party equipment is permitted, and factory or dealer installed is preferred.
4. Bodies or utility beds offered may be hydraulically, mechanically, and/or electrically operated, powered by the vehicle's electrical supply, a power-take-off (PTO), independent or separate power source. PTO's shall be installed in accordance with vehicle manufacturer's recommendations.
5. In the event the factory installed vehicle electrical system requires modifications/upgrades to provide power to the optional utility bed, installing dealer shall ensure modifications/upgrades will be in accordance with the vehicle manufacturer's specifications, and not void the manufacturer's warranty.
6. Must be securely fastened to the basic vehicle structure and bolted securely through chassis rail flange as per chassis manufacturer design specifications.
7. Bodies shall not exceed the manufacturer's vehicle load recommendations or the gross vehicle weight rating (GVWR). The factory-installed vehicle braking system shall meet or exceed the US Department of Transportation (USDOT) and New Mexico Department of Transportation (NMDOT) stopping requirements for the total vehicle GVWR.
8. All options provided shall comply with USDOT and NMDOT requirements for width, height, weight, lighting, safety, and other requirements for operation on city, and county roads, and state and federal highways. Vendor agrees to consult and provide CES Member or Participating Entity requirements and specifications for bed and options to comply with USDOT and NMDOT requirements.
9. Dealer shall supply to the CES Member or Participating Entity any USDOT and/or NMDOT certificates stating compliance for the vehicle, and/or utility bed installed on the vehicle, if applicable and/or required for registration and use on highways.
10. Upon request by the CES Member or Participating Entity prior to vehicle delivery, the dealer will assist in obtaining, or provide service to obtain any required vehicle inspections. Vehicle shall pass all required inspections prior to passing of vehicle title to CES Member or Participating Entity.
11. Optional Equipment can be offered to include but not limited to wet kits, refuse containers, roll- off containers, tarp systems, snowplows, salt spreaders, lift gates, GPS tracking systems, in vehicle monitoring systems, winches, custom fabrication, metal work services, various type containers for trash pickup, etc.
12. Each equipment shall be a new and currently advertised model of the manufacturer's latest design, equipped with all standard component items identified in the manufacturer's description and specification publications, whether or not specifically requested and except where optional components are specified herein.
13. Manufacturer's Standard Equipment: All equipment and components listed as standard by

the manufacturer for models offered shall be furnished.

14. Manufacturer's Specification: Complete manufacturer's specification, published literature, and photos or illustrations of units proposed should be furnished with your proposal. Only new models in current production and in service that are catalogued by the manufacturer, and forwhich printed literature and specifications are available will be accepted.
15. Hose And Wiring Routing, Hardware Requirements: All hoses and wiring shall have adequate protective covers wherever there is a possibility of contact with any other components. Separators shall be used where applicable. No tape or adhesive fasteners will be accepted. All hoses, wiring and pipes shall be routed to be clear of all heat sources and shall be protected fromany present or potential source of snags, abrasions or sharp edges. If any wiring for any lamps is routed through any tool compartment or canopy, these wires shall be enclosed. All fasteners (nuts,bolts, rivets & etc.) shall be per manufacturer specification with a rust inhibiting coating.

J. WELDING

1. All welding shall be continuous where applicable. All welding shall be performed in accordance with the applicable requirements of the latest codes, rules or specifications of the American Welding Society, (AWS).

K. Furnish two (2) complete sets of Operator, Parts, and Technical manuals including electrical wire diagrams.

L. BACK-UP WARNING DEVICE

1. Shall be waterproof that is readily audible outside each vehicle when the transmission is in reverse.
2. A rear obstacle detection system can be offered.

M. BUMPERS

1. The front bumpers shall be OEM standard design.

N. BODY

1. Corrosion Protection: Per OEM manufacturer's specifications.

O. EXTERIOR LIGHTING

1. All lights for taillights, brake light, turn signal, back-up, collision avoidance lights and clearance marker lights shall be Light Emitting Diode (LED).

P. PAINT AND TRIM

1. Color shall be standard colors offered from the OEM manufacturer. Custom paint colors can be Offeror as an option.
2. All exterior surfaces shall be smooth and free of wrinkles and dents.
3. Exterior surfaces to be painted shall be properly prepared as required by the paint system supplier.

4. Drilled holes and cutouts in exterior surfaces shall be made prior to cleaning, priming and painting to prevent corrosion.
5. To the degree consistent with industry standards for commercial vehicle finishes, painted surfaces shall have gloss and orange peel shall be minimized.
6. All exterior finished surfaces shall be impervious to diesel fuel, gasoline and commercial cleaning agents.
7. Paint shall be applied smoothly and evenly with the finished surface free of dirt and the following other imperfections:
   a. Blisters or bubbles appearing in the topcoat film
   b. Chips, scratches, or gouges of the surface finish
   c. Cracks in the paint film
   d. Craters where paint failed to cover due to surface contamination
   e. Over spray
   f. Peeling
   g. Runs or sags from excessive flow and failure to adhere uniformly to the surface
   h. Chemical stains and water spots

Q. SAFETY EQUIPMENT

1. Shall at the minimum comply with FMVSS.

R. LICENSE PLATES

1. Provisions shall be made to mount standard size U.S. license plates per SAE J686 on the rear of the body if applicable.

S. OPTIONAL EQUIPMENT AND FEATURES

1. The Offeror is to provide a list of optional equipment and features that can be offered to customize the body to meet the CES Members or Participating Entities needs, such as hydraulic and electric gate lifts, ramps, tow hooks, generators, lift buckets, power take off unit (PTO), ladder racks, wet unites, fire truck bodies, etc.
2. The Offeror will need to provide details on the process that will be used by CES Members or Participating Entities to identify the optional equipment and features and how they will be implemented in to the design of the vehicle.

T. REPLACEMENT PARTS

1. OEM or aftermarket parts approved by the OEM.
2. If aftermarket parts are provided for warranty repair, they must not void the manufactures warranty.

U. SERVICES

1. Repair, maintenance and warranty repair services may be offered. Body repair services are requested. Specialty repairs may be performed by an authorized sublet repair facility.

V. USED BODIES

1. Used bodies may be offered under solicitation. Pricing shall be based upon Dealer acquisition price + cost to comply to Federal and NMDOT safety standards + body service

+transportation + dealer markup not to exceed a maximum of XX.XX% to arrive at Selling Price

2. According to the requirements for 13-1-155 A NMSA 1978, any used item of "… tangible personal property the estimated cost of which exceeds five thousand dollars ($5,000), …" requires at a minimum "… a written warranty for at least ninety days after date of delivery and an independent "certificate of working order" by a qualified mechanic or appraiser."
3. contract shall have only ASE-Certified Master Truck Equipment Technicians, or at a minimum, a technician with prior medium-heavy duty truck/bus experience in air brake systems, steering and suspension, to repair vehicles.
4. Warranty repairs shall only be performed by manufacturer authorized repair facilities for vehicles and/or optional installed equipment.
5. Tire repair and maintenance services may include, but not be limited to: balancing, re-grooving, rotating, patching, tube replacement, wheel stud replacement, etc.

W. TRAINING

1. Training for maintenance staff on the proper service and repair of the vehicle and body.
2. Training for drivers on the proper and safe operation of the vehicle and body with special emphasis on how the emission control's function.

X. PUBLICATIONS AND PRINTED MATERIALS:

1. Each vehicle will have a complete set of operation, and warranty publications. The following shall be provided at time of delivery:
   a. Operation Manual: A complete operations manual and troubleshooting guide with a detailed manufacturer's parts list that covers the conversion features on the vehicle as listed in this specification. The manual will provide complete, comprehensive instructions to include but not limited to air conditioning systems, tie downs, heater, emissions, engine operations, lights, radio, wiring diagram and body modifications, accessories and related equipment.
   b. A complete schematic diagram of all hydraulic lines, air lines and electric circuits.
   c. Warranty Information: Each vehicle will have a published listing of contractor warranty repair locations, including address, telephone number, and contact name.

Y. ADDITIONS TO THE SCOPE OF WORK

Offerors who receive a contract as a result of this solicitation, and through the duration of the contract, may propose vehicles, equipment, products, and related services that were either inadvertently left out of this RFP, or are new technology. Such proposed items shall be submitted to CES for review and must remain consistent with the spirit of the RFP. Items approved shall be added to the contract through an amendment, mutually agreed upon by all parties to the contract.

Omissions in this proposal of any provision herein described shall not be construed as to relieve the vendor of any responsibility or obligation to the complete and satisfactory delivery, operation, and support of any and all equipment or services.

ATTACHMENT B
TO
ACCEPTANCE OF PROPOSAL AND OFFER
AND CONTRACT AWARD

PRICING

All pricing including updates/changes must be uploaded through the vendor portal in the eProcurement System for review and approval by CES.

A Price List/Pricing: The Offeror will upload through the vendor portal electronic copies of or provide electronic access to the approved current price list(s) for products and services offered under this solicitation (RFP) upon execution of this contract. The Offeror must keep current all pricing for any contract issued as a result of this solicitation. Should the Offeror fail to update pricing with CES, the Offeror shall honor their pricing on file with CES at the time of their quote submittal to the CES Member/Participating Entity. Discounts off the current price list are permitted and must remain firm throughout the life of the contract. Discount off list price must be clearly noted in the price quote to the member. All pricing must include the CES administration fee.

B New Technology and Products: New products or related services announced by manufacturer and/or Contractor may be added to this existing contract. Pricing shall be equivalent to the percentage discount of other product(s); is substantially superior to the original product(s) offered; is discounted in a similar or to a greater degree; and if the product(s) meet the requirements of the original RFP. No products may be added to avoid competitive procurement procedures. CES is responsible for approving any product, service or technology for this contract. CES can reject any approved additions, any new product, service or technology for this contract, without cause.

C Price Quote/Proposal: When preparing a quote/proposal under a CES awarded contract, the Offeror must clearly identify and break out quantities, descriptions, supplies, materials, equipment and services into individual line items as they appear on the Offeror’s awarded price schedule or pricing methodology. At a minimum all quotes or proposals shall include the following: description, “hourly labor rate or the list/catalog unit price”, “the per cent discount offered” and the final “CES price”. All stated prices must include the CES one point two five percent (1.25%) administrative fee. Shipping/Freight costs and the New Mexico Gross Receipts Tax as applicable must be stated in separate lines.

D Price Reduction, Promotional and Special Pricing: A price reduction can be offered at any time and will become effective upon approval by CES. CES reserves the right to approve or disapprove such requests.

E Price Increases: Anytime during the life of the contract, pricing can be updated (increased/decreased) with proper justification letter from the manufacturer or distributor thereof and will become effective upon approval by CES. CES reserves the right to approve or disapprove

such requests.

F Price Surcharges: Depending on current market conditions, surcharges may apply as approved by CES.

COST PROPOSAL

Category 1 - Lot 1 - Truck Bodies | Truck Bodies 2024-25 | 411 Equipment LLC

Product Name	Product Description	Unit Of Measure	All Regions	Region 1	Region 2	Region 3	Region 4	Region 5	Region 6	Region 7	Region 8
Utility Beds	Percent of Discount off Printed/Published Price Sheets	Percent	2 %	2 %	2 %	2 %	2 %	2 %	2 %	2 %	2 %
Flatbed Body	Percent of Discount off Printed/Published Price Sheets	Percent	2 %	2 %	2 %	2 %	2 %	2 %	2 %	2 %	2 %
Stakebed Body	Percent of Discount off Printed/Published Price Sheets	Percent	2 %	2 %	2 %	2 %	2 %	2 %	2 %	2 %	2 %
Van Body	Percent of Discount off Printed/Published Price Sheets	Percent	2 %	2 %	2 %	2 %	2 %	2 %	2 %	2 %	2 %
Dump Body	Percent of Discount off Printed/Published Price Sheets	Percent	2 %	2 %	2 %	2 %	2 %	2 %	2 %	2 %	2 %
Tank Body	Percent of Discount off Printed/Published Price Sheets	Percent	2 %	2 %	2 %	2 %	2 %	2 %	2 %	2 %	2 %
Utility Body	Percent of Discount off Printed/Published Price Sheets	Percent	2 %	2 %	2 %	2 %	2 %	2 %	2 %	2 %	2 %
Bucket Body	Percent of Discount off Printed/Published Price Sheets	Percent	2 %	2 %	2 %	2 %	2 %	2 %	2 %	2 %	2 %
Crane Body	Percent of Discount off Printed/Published Price Sheets	Percent	2 %	2 %	2 %	2 %	2 %	2 %	2 %	2 %	2 %
Roll-Off Body	Percent of Discount off Printed/Published Price Sheets	Percent	2 %	2 %	2 %	2 %	2 %	2 %	2 %	2 %	2 %
Front Loader Body	Percent of Discount off Printed/Published Price Sheets	Percent	2 %	2 %	2 %	2 %	2 %	2 %	2 %	2 %	2 %
Front End Loader Body	Percent of Discount off Printed/Published Price Sheets	Percent	2 %	2 %	2 %	2 %	2 %	2 %	2 %	2 %	2 %
Side Loader Body	Percent of Discount off Printed/Published Price Sheets	Percent	2 %	2 %	2 %	2 %	2 %	2 %	2 %	2 %	2 %
Rear Loader Body	Percent of Discount off Printed/Published Price Sheets	Percent	2 %	2 %	2 %	2 %	2 %	2 %	2 %	2 %	2 %
Grappler Body	Percent of Discount off Printed/Published Price Sheets	Percent	2 %	2 %	2 %	2 %	2 %	2 %	2 %	2 %	2 %
Trash Body Rear Loading	Percent of Discount off Printed/Published Price Sheets	Percent	2 %	2 %	2 %	2 %	2 %	2 %	2 %	2 %	2 %
Trash Body Side Loading	Percent of Discount off Printed/Published Price Sheets	Percent	2 %	2 %	2 %	2 %	2 %	2 %	2 %	2 %	2 %
Hydro Vacuum Tank Body	Percent of Discount off Printed/Published Price Sheets	Percent	2 %	2 %	2 %	2 %	2 %	2 %	2 %	2 %	2 %
Tanker Body	Percent of Discount off Printed/Published Price Sheets	Percent	2 %	2 %	2 %	2 %	2 %	2 %	2 %	2 %	2 %
Cutaway Ambulance Body	Percent of Discount off Printed/Published Price Sheets	Percent	2 %	2 %	2 %	2 %	2 %	2 %	2 %	2 %	2 %
Cutaway Utility Van Body	Percent of Discount off Printed/Published Price Sheets	Percent	2 %	2 %	2 %	2 %	2 %	2 %	2 %	2 %	2 %
Cutaway Walk In Utility Van Body	Percent of Discount off Printed/Published Price Sheets	Percent	2 %	2 %	2 %	2 %	2 %	2 %	2 %	2 %	2 %
Flatbed Dump Body	Percent of Discount off Printed/Published Price Sheets	Percent	2 %	2 %	2 %	2 %	2 %	2 %	2 %	2 %	2 %
Wrecker Boom Type Body	Percent of Discount off Printed/Published Price Sheets	Percent	2 %	2 %	2 %	2 %	2 %	2 %	2 %	2 %	2 %
Wrecker Roll Off Body	Percent of Discount off Printed/Published Price Sheets	Percent	2 %	2 %	2 %	2 %	2 %	2 %	2 %	2 %	2 %
Animal Control Body	Percent of Discount off Printed/Published Price Sheets	Percent	2 %	2 %	2 %	2 %	2 %	2 %	2 %	2 %	2 %
Mechanics Body	Percent of Discount off Printed/Published Price Sheets	Percent	2 %	2 %	2 %	2 %	2 %	2 %	2 %	2 %	2 %

Product Name	Product Description	Unit Of Measure	All Regions	Region 1	Region 2	Region 3	Region 4	Region 5	Region 6	Region 7	Region 8
Lube Body	Percent of Discount off Printed/Published Price Sheets	Percent	2 %	2 %	2 %	2 %	2 %	2 %	2 %	2 %	2 %
Fire Truck	Percent of Discount off Printed/Published Price Sheets	Percent	2 %	2 %	2 %	2 %	2 %	2 %	2 %	2 %	2 %
Fire Truck Brush Body	Percent of Discount off Printed/Published Price Sheets	Percent	2 %	2 %	2 %	2 %	2 %	2 %	2 %	2 %	2 %
Street Sweeper Body	Percent of Discount off Printed/Published Price Sheets	Percent	2 %	2 %	2 %	2 %	2 %	2 %	2 %	2 %	2 %
Miscellaneous Body Types	Percent of Discount off Printed/Published Price Sheets	Percent	2 %	2 %	2 %	2 %	2 %	2 %	2 %	2 %	2 %
Emergency Road Side Service	Cost per mile	cost	$ 215	$ 215	$ 215	$ 215	$ 215	$ 215	$ 215	$ 215	$ 215
Optional Equipment	Percent of Discount off Printed/Published Price Sheets	Percent	2 %	2 %	2 %	2 %	2 %	2 %	2 %	2 %	2 %
Hourly Rates for Installation of Accessories and Equipment	Hourly Rate	cost	$ 175	$ 175	$ 175	$ 175	$ 175	$ 175	$ 175	$ 175	$ 175
Hourly Rates for Paint and Body Services	Hourly Rate	cost	$ 175	$ 175	$ 175	$ 175	$ 175	$ 175	$ 175	$ 175	$ 175
Hourly Service Rates for Maintenance and Repairs	Hourly Rate	cost	$ 175	$ 175	$ 175	$ 175	$ 175	$ 175	$ 175	$ 175	$ 175
DOT Inspections	Percent of Discount off Printed/Published Price Sheets	Percent	2 %	2 %	2 %	2 %	2 %	2 %	2 %	2 %	2 %
Training for Drivers	Hourly Rate	cost	$ 175	$ 175	$ 175	$ 175	$ 175	$ 175	$ 175	$ 175	$ 175
Training for Maintenance Personnel	Hourly Rate	cost	$ 175	$ 175	$ 175	$ 175	$ 175	$ 175	$ 175	$ 175	$ 175
Replacement Parts, Materials and Supplies	Percent of Discount off Printed/Published Price Sheets	Percent	2 %	2 %	2 %	2 %	2 %	2 %	2 %	2 %	2 %
Maintenance Service Plans	Percent of Discount off Printed/Published Price Sheets	Percent	2 %	2 %	2 %	2 %	2 %	2 %	2 %	2 %	2 %
Extended Warranty	Percent of Discount off Printed/Published Price Sheets	Percent	2 %	2 %	2 %	2 %	2 %	2 %	2 %	2 %	2 %
Vehicle Delivery Cost	Cost per mile from Dealer to CES Member	cost	$ 2.5	$ 2.5	$ 2.5	$ 2.5	$ 2.5	$ 2.5	$ 2.5	$ 2.5	$ 2.5
Emergency Road Side Service	Cost per mile	cost	$ 2.5	$ 2.5	$ 2.5	$ 2.5	$ 2.5	$ 2.5	$ 2.5	$ 2.5	$ 2.5
Emergency Road Side Service	Hourly Rate	cost	$ 215	$ 215	$ 215	$ 215	$ 215	$ 215	$ 215	$ 215	$ 215
Used Body Pricing shall be based upon Dealer acquisition price + cost to comply to Federal and NMDOT safety standards + body service +transportation + dealer markup not to exceed a maximum of XX.XX%	Dealer Markup not to exceed a maximum of XX.XX%	Percent	25 %	25 %	25 %	25 %	25 %	25 %	25 %	25 %	25 %
Offeror's Support for CES Pricing	Offerors Support for CES Pricing, Percent of difference between CES price and individual entity price from Form "Offeror Support for CES" that was uploaded to Response Format under Mandatory Response Section - General Response.	Percent	2 %	2 %	2 %	2 %	2 %	2 %	2 %	2 %	2 %
Alternative Costing O/P	Alternative Methods of Costing - Specialized/Custom- percent of overhead/markup and profit added to cost	Percent	25 %	25 %	25 %	25 %	25 %	25 %	25 %	25 %	25 %
Alternative Costing CES Discount	Discounts Offered Off Alternative Costing Methods (cost plus profit and overhead) Less Rate of Discount	Percent	0 %	0 %	0 %	0 %	0 %	0 %	0 %	0 %	0 %

Ferrara - CES Price Schedule			CES 2% Discount	CES MEMBER PRICE
Aerials				
CES-01	Cinder, 4-Door Full-Tilt OEM Cab, Extruded Aluminum Body, Single Axle, 57' Rear Mounted	Discontinued		
CES-02	Igniter, 4-Door Full-Tilt OEM Cab, Extruded Aluminum Body, Single Axle, 57' Rear Mounted	Discontinued		
CES-03	Inferno, 4-Door Full-Tilt OEM Cab, Extruded Aluminum Body, Single Axle, 57' Rear Mounted	Discontinued		
CES-04	Cinder, 4-Door Full-Tilt OEM Cab, Extruded Aluminum Body, Single Axle, 77' Rear Mounted	$1,763,544	$ (35,271)	$ 1,728,273
CES-05	Igniter, 4-Door Full-Tilt OEM Cab, Extruded Aluminum Body, Single Axle, 77' Rear Mounted	$1,854,154	$ (37,083)	$ 1,817,071
CES-06	Inferno, 4-Door Full-Tilt OEM Cab, Extruded Aluminum Body, Single Axle, 77' Rear Mounted	$1,921,839	$ (38,437)	$ 1,883,402
CES-07	Inferno, 4-Door Full-Tilt OEM Cab, Extruded Aluminum Body, Tandem Axle, 107' Rear Mounted	$2,113,616	$ (42,272)	$ 2,071,344
CES-08	Inferno, 4-Door Full-Tilt OEM Cab, Extruded Aluminum Body, Tandem Axle, 100' Rear Mounted	$2,391,266	$ (47,825)	$ 2,343,441
CES-09	Inferno, 4-Door Full-Tilt OEM Cab, Extruded Aluminum Body, Tandem Axle, 100' Mid-Mounted	$2,631,812	$ (52,636)	$ 2,579,176
CES-10	Inferno, 4-Door Full-Tilt OEM Cab, Aluminum Body, Tandem Axle, 100' Tractor Drawn	$2,738,815	$ (54,776)	$ 2,684,039
Pumper Fire Apparatus				
CES-11	Freightliner M2, 4-Door, Extruded Aluminum Body, Single Axle, 1250 GPM Pump, Mid-Mounted Pumper	$588,377	$ (11,768)	$ 576,609
CES-12	FC94, 4-Door, Extruded Aluminum Body, Single Axle, 1250 GPM Pump, Mid-Mounted Pumper	$848,256	$ (16,965)	$ 831,291
CES-13	Custom Cinder, 4-Door, Full-Tilt Cab, Extruded Aluminum Body, Single Axle, 1500 GPM Pump,	$963,298	$ (19,266)	$ 944,032
CES-14	Custom Igniter, 4-Door, Full-Tilt Cab, Extruded Aluminum Body, Single Axle, 1500 GPM Pump,	$1,049,914	$ (20,998)	$ 1,028,916
CES-15	Custom Inferno, 4-Door, Full-Tilt Cab, Extruded Aluminum Body, Single Axle, 1500 GPM Pump,	$1,070,840	$ (21,417)	$ 1,049,423
Rescues				
CES-16	Ford 550, 2-door Cab, Single Axle, Extruded Aluminum Body, NON-Walk-In LIGHT	$359,819	$ (7,196)	$ 352,623
CES-17	Ford 550, 2-door Super Cab, Single Axle, Extruded Aluminum Body, NON-Walk-In LIGHT Rescue	$331,022	$ (6,620)	$ 324,402
CES-18	Ford 550, 4-door Cab, Single Axle, Extruded Aluminum Body, NON-Walk-In LIGHT	$340,240	$ (6,805)	$ 333,435
CES-19	Freightliner M2, 2-door Cab, Single Axle, Extruded Aluminum Body, NON-Walk-In MEDIUM	$718,884	$ (14,378)	$ 704,506

CES-20	Freightliner M2, 4-door Cab, Single Axle, Extruded Aluminum Body, NON-Walk-In MEDIUM	$744,534	$	(14,891)	$	729,643
CES-21	Freightliner M2, 2-door Cab, Single Axle, Extruded Aluminum Body, Walk-In MEDIUM	$939,360	$	(18,787)	$	920,573
CES-22	Freightliner M2, 4-door Cab, Single Axle, Extruded Aluminum Body, Walk-In MEDIUM	$966,720	$	(19,334)	$	947,386
CES-23	Cinder, 4-Door, Full-Tilt, OEM Cab, Single Axle, Extruded Aluminum Body, NON Walk-In	$1,322,400	$	(26,448)	$	1,295,952
CES-24	Cinder, 4-Door, Full-Tilt, OEM Cab, Single Axle, Extruded Aluminum Body, Walk-In HEAVY	$1,479,264	$	(29,585)	$	1,449,679
CES-25	Igniter, 4-Door, Full-Tilt, OEM Cab, Single Axle, Extruded Aluminum Body, NON Walk-In	$1,450,080	$	(29,002)	$	1,421,078
CES-26	Igniter, 4-Door, Full-Tilt, OEM Cab, Single Axle, Extruded Aluminum Body, Walk-In HEAVY	$1,586,880	$	(31,738)	$	1,555,142
CES-27	Inferno, 4-Door, Full-Tilt, OEM Cab, Single Axle, Extruded Aluminum Body, NON Walk-In	$1,667,136	$	(33,343)	$	1,633,793
CES-28	Inferno, 4-Door, Full-Tilt, OEM Cab, Single Axle, Extruded Aluminum Body, Walk-In HEAVY	$1,809,408	$	(36,188)	$	1,773,220
Pumper/Tankers, Tankers and Wildland						
CES-29	M2 Freightliner, 2-Door, Extruded Aluminum Body, Tandem Axle, 1250 GPM Pump, Mid-Mounted Pumper/Tanker (3000 Gallons)	$671,831	$	(13,437)	$	658,394
CES-30	M2 Freightliner, 4-Door, Extruded Aluminum Body, Tandem Axle, 1250 GPM Pump, Mid-Mounted Pumper/Tanker (3000 Gallons)	$699,829	$	(13,997)	$	685,832
CES-31	Custom Cinder 2, 4-Door, Extruded Aluminum Body, Tandem Axle, 1250 GPM Pump, Mid-	$1,117,031	$	(22,341)	$	1,094,690
CES-32	Custom Igniter, 4-Door, Extruded Aluminum Body, Tandem Axle, 1250 GPM Pump, Mid-Mounted Pumper/Tanker (3000 Gallons)	$920,325	$	(18,407)	$	901,919
CES-33	Custom Inferno, 4-Door, Extruded Aluminum Body, Tandem Axle, 1250 GPM Pump, Mid-Mounted Pumper/Tanker (3000 Gallons)	$1,150,405	$	(23,008)	$	1,127,397
CES-34	Brush Truck, 2-Door, Aluminum Flat Bed, Single Axle, Ford F-550 4x4	$344,182	$	(6,884)	$	337,298
CES-35	Brush Truck, 2-Door, Aluminum Flat Bed, Single Axle, Dodge 5500 4x4	$350,177	$	(7,004)	$	343,173
CES-36	Brush Truck, 2-Door, Aluminum Flat Bed, Single Axle, Chevy 5500 4x4	$347,021	$	(6,940)	$	340,081

Docusign Envelope ID: B69E7954-A830-4D78-AF50-806A2ADA6A8E

NEW MEXICO CAPITAL OUTLAY GRANT AGREEMENT
CAPITAL APPROPRIATION PROJECT

THIS AGREEMENT is made and entered into by and between the State of New Mexico, Department of Finance & Administration, 407 Galisteo Street, Santa Fe, NM 87501, ("**Department**") and the City of Santa Fe, ("**Grantee**") (individually "**Party**" and collectively "**Parties**"). This Agreement shall be effective as of the date the Department executes it ("**Effective Date**").

WITNESSETH

WHEREAS, in the Laws of 2025, Chapter 159, Section 494, Paragarph 33, the Legislature made an appropriation to the Department, funds from which the Department is making available to the Grantee pursuant to this Agreement; and

WHEREAS, the Department is granting to Grantee, and the Grantee is accepting the grant of funds from this appropriation, in accordance with the terms and conditions of this Agreement;

NOW, THEREFORE, in consideration of the mutual covenants and obligations contained herein, the parties hereby mutually agree as follows:

AGREEMENT

I. PROJECT DESCRIPTION, GRANT AMOUNT, AND REVERSION

A. **25-J3149** ("**Project**") 6/30/2027 ("**Reversion Date**"). Laws of 2025, Chapter 159, Section 49433, One Million Nine Hundred Thousand Dollars and No Cents, $1,900,000.00, to purchase and equip a ladder truck for the fire department in Santa Fe in Santa Fe county;.

B. Grantee's total reimbursements shall not exceed $1,900,000.00 One Million Nine Hundred Thousand Dollars and No Cents, ("**Appropriation Amount**") minus the allocation for Art in Public Places ("**AIPP amount**"), if applicable, $0.00 No Dollars and No Cents, which equals $1,900,000.00 One Million Nine Hundred Thousand Dollars and No Cents ("**Adjusted Appropriation Amount**").

C. In the event of a conflict among the Appropriation Amount, the Reversion Date, as defined herein and/or the purpose of the Project, as set forth in this Agreement, and the corresponding appropriation language in the laws cited above in this Article I, the language of the laws cited herein shall control.

The information contained in Article I is referred to collectively as the "**Project Description**."

II. DISBURSEMENT LIMITATION

A. Upon the Effective Date, the Grantee shall submit to the Department a comprehensive procurement plan and expenditure plan, detailing a Project timeline with milestones, required procurements, and identifying expected expenditures per milestone (collectively, "**Project Budget**"). The Department shall review and approve the Project Budget by approving a Notice of Department's Obligation ("**Notice of Obligation**"), in accordance with the Project Description, a

Docusign Envelope ID: B69E7954-A830-4D78-AF50-806A2ADA6A8E

sample of which is attached hereto as **Exhibit B** and incorporated herein by reference. After receipt of approved Notice of Obligation, the Grantee may be reimbursed for allowable costs up to the Adjusted Appropriation Amount. This Agreement and any reimbursements up to the Adjusted Appropriation Amount are expressly conditioned upon the following:

a. Irrespective of any Notice of Obligation, Grantee's expenditures shall be made in accordance with the Project Budget, on or before the Reversion Date and/or, if applicable, any Early Termination Date; and
b. The total amount received by Grantee shall not exceed the lesser of:
    i. the Adjusted Appropriation Amount identified in Article I (B) herein; or
    ii. the total of all amounts stated in the Notice(s) of Obligation evidencing the Department has received and accepted Grantee's Third Party Obligation(s); and
c. Grantee's expenditures are made and accounted for pursuant to the State Procurement Code, State's Model Accounting Practices, and execution of binding written obligations or purchase orders with third-party contractors or vendors for the provision of services, including professional services, or the purchase of tangible personal property and real property for the Project ("**Third Party Obligations**"); and
d. Grantee's submittal of timely Requests for Payment and supporting documentation in accordance with the procedures set forth in this Agreement; and
e. In the event capital assets acquired with Project funds are to be sold, leased, or licensed to or operated by a private entity, the sale, lease, license, or operating agreement:
    i. must be approved by the applicable oversight entity (if any) in accordance with §§ 13-6-2, 13-6-2.1, and 13-6-3; or
    ii. If no oversight entity is required to approve the transaction, the Department of Finance and Administration's Infrastructure Planning Development Division (IPDD) must approve it as complying with the law.

B. Prior to the sale, lease, license, or operating agreement being approved pursuant to Articles II(A)(e)(i) or (ii) herein, the Department may, in its sole and absolute discretion, unless inconsistent with State Board of Finance imposed conditions, reimburse Grantee for necessary expenditures incurred to develop the Project sufficiently to make the sale, lease, license, or operating agreement commercially feasible, limited to planning and design expenditures; and

C. Grantee's submission of documentation of all Third Party Obligations and amendments thereto (including terminations) to the Department and the Department's issuance of a Notice of Obligation for a particular amount in accordance with the terms of this Agreement shall be governed by the following:

a. Grantee is authorized to budget the particular amount set forth in the Notice of Obligation, execute the Third Party Obligation, and request the Third Party to begin work after issuance of a Notice of Obligation by the Department.
b. Grantee acknowledges and agrees that any Third Party Obligations agreed to prior to receiving a Notice of Obligation are its sole responsibility.
c. Grantee shall submit to the Department one copy of all Third Party Obligations and amendments thereto (including terminations) as soon as possible after execution by the Third Party but prior to execution by the Grantee.
d. Department may, in its sole and absolute discretion, issue a Notice of Obligation for the particular amount of a Third Party Obligation that only obligates the Department to

Docusign Envelope ID: B69E7954-A830-4D78-AF50-806A2ADA6A8E

reimburse Grantee's expenditures made on or before the Reversion Date or an Early Termination Date. The current Notice of Obligation form is incorporated herein and attached hereto as **Exhibit B**.

D. Grantee shall provide all necessary qualified personnel, materials, and facilities to implement the Project. The Grantee shall finance its share (if any) of the costs of the Project, including all Project overruns.

E. Prior to entering into this Agreement, the Department conducted a risk assessment on the Grantee and a project readiness review for the Project. In accordance with State Model Accounting Practices, FIN 9.2, if the Department determines that the expenditure of Project funds by the Grantee requires special conditions, those conditions are identified and listed in **Exhibit C**, which is attached and incorporated by reference. The Parties agree that, to the extent the Department, in its sole and absolute discretion, determines additional special conditions are necessary or that existing special conditions are no longer required, it may update **Exhibit C** from time to time without the need for a formal amendment of this Agreement.

F. Project funds shall not be used for purposes other than those authorized by the Department in accordance with the Project Description.

G. Project funds cannot be used to reimburse the Grantee for indirect Project costs unless specifically allowed by law.

III. NOTICES

The following provisions shall apply whenever written notices, including written decisions, are to be given or received related to this Agreement.

A. The Grantee designates the person(s) listed below, or their successor, as their official representative(s) concerning all matters related to this Agreement:

Grantee: City of Santa Fe
Name: Alan Webber
Title: Mayor
Address: PO Box 909, Santa Fe, NM 87504
Email: mayor@santafenm.gov
Telephone: 505-955-6590

B. The Grantee designates the person(s) listed below, or their successor, as their Fiscal Officer or Fiscal Agent concerning all matters related to this Agreement:

Grantee: City of Santa Fe
Name: Emily Oster
Title: Finance Director
Address: PO Box 909, Santa Fe, NM 87504
Email: ekoster@santafenm.gov
Telephone: 505-629-3411

Docusign Envelope ID: B69E7954-A830-4D78-AF50-806A2ADA6A8E

C. The Department designates the persons listed below, or their successors, as the Points of Contact for matters related to this Agreement.

Department: DFA/Local Government Division
Name: Daniel Catanach
Title: Grant Manager
Address: Bataan Memorial Bldg. Rm 202, Santa Fe NM 87501
Email: danieln.catanach@dfa.nm.gov
Telephone: 505-231-6090

The Parties agree that all notices, including written decisions, related to this Agreement shall be sent to the persons named above by email or regular mail. For mailings, notices shall be deemed to have been given and received upon the date of the receiving party's actual receipt or five (5) calendar days after mailing, whichever shall first occur. In the case of email transmissions, the notice shall be deemed to have been given and received on the date reflected on the delivery receipt of the email.

IV. TERM & DEADLINE TO EXPEND FUNDS

A. The term of this Agreement shall begin on the Effective Date and terminate on the 30th day of June during the calendar year of the Reversion Date unless Terminated Before Reversion Date ("**Early Termination**") pursuant to Article V herein (collectively "**Term**").

B. The Project's funds must be expended on or before the Reversion Date and, if applicable, the Early Termination Date of this Agreement.

a. For purposes of this Agreement, it is not sufficient for the Grantee to encumber the Project funds on its books on or before the Reversion Date or Early Termination Date.
b. For purposes of this Agreement, an expenditure of funds has occurred on the date the particular quantity of goods is delivered to and received by the Grantee, title to the goods is transferred to the Grantee, and/or as of the date particular services are rendered to and accepted by the Grantee.
c. For purposes of this Agreement, an encumbrance of funds pursuant to a contract or purchase order with a third party does not qualify as an expenditure.

V. EARLY TERMINATION

A. General Provision. The Department may terminate this Agreement before the Reversion Date based on the Completion of the Project, Complete Expenditure of the Adjusted Appropriation, and/or Violation of this Agreement. Early Termination hereunder includes:

a. Termination due to completion of the Project before the Reversion Date;
b. Termination due to complete expenditure of the Adjusted Appropriation Amount before the Reversion Date;
c. Termination for violation of the terms of this Agreement; or
d. Termination for suspected mishandling of public funds, including but not limited to fraud, waste, abuse, and conflicts of interest.

Docusign Envelope ID: B69E7954-A830-4D78-AF50-806A2ADA6A8E

B. Non-appropriation. This Agreement is expressly contingent upon the New Mexico State Legislature making sufficient appropriations and authorizations for the Project Description.

a. If the Legislature does not appropriate the Appropriation Amount, this Agreement shall terminate upon the Department giving the Grantee written notice of such termination. Such termination shall be effective as of the effective date of the law making the non-appropriation.
    i. The Department's decision as to whether sufficient appropriations or authorizations are available shall be final. Grantee hereby waives any rights to assert an impairment of contract claim against the State of New Mexico in the event of Early Termination of this Agreement.
b. As used herein, "non-appropriate" or "non-appropriation" includes the following actions by the New Mexico Legislature:
    i. Deauthorization, reauthorization, or revocation of a prior authorization.

C. Grant Disbursements in the Event of Early Termination. In the event of Early Termination, the Department's sole and absolute obligation to reimburse the Grantee is expressly conditioned upon the limitations set forth in Article II above.

D. Notice. Either Party may terminate this Agreement prior to the Reversion Date by providing the other Party with a minimum of fifteen (15) days advance written notice of the Early Termination. Grantee hereby waives any rights to assert an impairment of contract claim against the State of New Mexico in the event of Early Termination of this Agreement by the Department.

VI. SUSPENSION OF NEW OR FURTHER OBLIGATIONS

A. Department, in its sole and absolute discretion, may provide written notice to Grantee to suspend entering into further obligations. Upon the receipt of such written notice by the Grantee:

a. Grantee shall immediately suspend entering into new or further written obligations with third parties;
b. Department will suspend the issuance of any new or further Notice of Obligation under this Agreement; and
c. Department may direct the Grantee to implement a corrective action plan in accordance with Article VI (D) herein.

B. In the event of Suspension of this Agreement, the Department's sole and absolute obligation to reimburse the Grantee is expressly conditioned upon the limitations set forth in Article II herein.

C. A suspension of new or further obligations under this Agreement shall remain in effect unless or until the date the Grantee receives written notice given by the Department informing the Grantee that the Suspension has been lifted or that the Agreement has been Early Terminated in accordance with Article V herein. If the Suspension is lifted, the Department will consider further requests for a Notice of Obligation.

D. Corrective Action Plan in the Event of Suspension. Where the Department, in its sole and absolute discretion, directs Grantee to suspend entering into new or further written obligations

Docusign Envelope ID: B69E7954-A830-4D78-AF50-806A2ADA6A8E

with third parties pursuant to Article VI(A), the Department may, but is not obligated to, require the Grantee to develop and implement a written corrective action plan to remedy the grounds for the Suspension.

a. Such a corrective action plan must be approved by the Department and be signed by the Grantee.
b. Failure to sign a corrective action plan or meet the terms and deadlines set forth in the signed corrective action plan is hereby deemed a violation of the terms of this Agreement for purposes of Early Termination, Article V(A)(c).
c. A corrective action plan shall be in addition to, and not in lieu of, any other equitable or legal remedy authorized hereunder or at law, including but not limited to Early Termination.

VII. AMENDMENTS

Unless expressly stated otherwise herein, this Agreement shall not be altered, changed, or amended except by an instrument in writing duly executed by both parties hereto with the same formalities as this agreement.

VIII. REPORTING

A. Database Reporting

a. Grantee shall provide the Department with quarterly reports of Project activity, entering the required Project information directly into a database required by the Department.
b. Additionally, Grantee shall certify on each Request for Payment form, attached hereto as **Exhibit A** and incorporated herein, that all information provided in the database is true and accurate, updates to the database have been maintained, and all Project activity complies with applicable law and the terms of this Agreement.
c. Grantee hereby acknowledges that failure to perform and/or certify updates to the database will jeopardize the reimbursement of funds. The Department shall give Grantee a minimum of fourteen (14) days' advance written notice of any changes to the information the Grantee is required to report.
d. At the Department's discretion, all reports required hereunder may be directed to and facilitated through an electronic database.
e. Quarterly reports shall be due on the last day of the month, that is, 30 days prior to the end of the quarter following the execution of this Agreement by the Department and ending during the quarter of the submission of the final request for reimbursement for the Project, or the following quarter.

B. Requests for Additional Information/Project Inspection

During the term of this Agreement and during the period of time during which the Grantee must maintain records pursuant to Article VIII, the Department may:

i. request such additional information regarding the Project as it deems necessary; and
ii. conduct, at reasonable times and upon reasonable notice, onsite inspections of the Project.

Docusign Envelope ID: B69E7954-A830-4D78-AF50-806A2ADA6A8E

Grantee shall respond to such requests for additional information within a reasonable period of time, as established by the Department.

B. Requests for Additional Information/Project Inspection

a. During the term of this Agreement and the Record Retention Period, the Department may:
   i. Request additional information regarding the Project as it deems necessary and
   ii. Conduct on-site inspections of the Project at reasonable times and upon reasonable notice.
b. Grantee shall respond to such requests for additional information within the time established by the Department.

IX. REQUEST FOR PAYMENT PROCEDURES

A. Grantee shall request payment by submitting the form attached hereto as **Exhibit A**. Payment requests are subject to the following procedures:

a. Each Request for Payment must be in accordance with the Project Budget and contain proof of payment by the Grantee or liabilities incurred by the Grantee.
   i. Proof of payment must demonstrate the validity of an expenditure or liabilities incurred by Grantee.
   ii. However, Grantee may be reimbursed for unpaid liabilities only if the Department, in its sole and absolute discretion, agrees to do so and in accordance with any special conditions imposed by the Department.
   iii. The Grantee shall make payment to those contractors or vendors within five (5) business days from the date of receiving reimbursement from the Department or in a shorter period than the Department may prescribe in writing.
   iv. The Department reserves the right to make such payments directly to the contractors or vendors as a special condition under this Agreement.
   v. The Grantee is required to certify to the Department proof of payment to the third-party contractor or vendor within five (5) business days from the date the Department reimburses the Grantee.

B. Until the Project is fully planned, designed, and all necessary procurements identified in the Project Budget are completed, Grantee's reimbursements will be limited to the planning, design, and procurement costs outlined in the Project Budget. Once the planning, designing, and procuring stages are complete, the Grantee must obligate at least ten percent (10%) of the Adjusted Appropriation Amount within one (1) year and must have utilized at least eighty-five percent (85%) of the Adjusted Appropriation Amount six (6) months before the reversion date.

C. Deadlines. Grantee shall submit requests for Payments to the Department on the earlier of:

a. Immediately as Grantee receives them, but at a maximum of thirty (30) days from when Grantee incurred the expenditure or liability; or
b. Twenty (20) days from the date of Early Termination or Reversion Date for expenditures or liabilities incurred before the Early Termination date or Reversion Date.

Docusign Envelope ID: B69E7954-A830-4D78-AF50-806A2ADA6A8E

D. Grantee's failure to abide by the requirements set forth in Article II and Article IX herein may result in the denial of its Request for Payment. Department reserves the right to reject a payment request for the Project unless and until it is satisfied that the expenditures or liabilities are for permissible purposes within the meaning of the Project Description, identified within the Project Budget, and that the Grantee is otherwise in compliance with this Agreement.

a. Department's authority to reject any Request for Payment is in addition to, and not in lieu of, any other legal or equitable remedy available to the Department under this Agreement, at law, or in equity.

X. PROJECT CONDITIONS AND RESTRICTIONS

A. The following general conditions and restrictions shall apply to the Project:

a. The Project's funds must be spent in accordance with all applicable state laws, regulations, policies, and guidelines, including, but not limited to, the State Procurement Code.
b. The Project's expenditures and liabilities must be accounted for in accordance with the State's Model Accounting Practices, as amended from time to time.
c. The Project must be implemented in accordance with the New Mexico Public Works Minimum Wage Act, Section 13-4-10 through 13-4-17 NMSA 1978, as applicable.
d. The Project must provide a public benefit above and beyond any incidental benefit to private entities in accordance with applicable law, including, but not limited to, Article IX, Section 14 of the Constitution of the State of New Mexico.
e. Without prior written approval from the Department and State Board of Finance, for the useful life of any asset purchased under this Agreement, Grantee shall not convert any property acquired, built, renovated, repaired, designed, or developed with Project funds to uses other than those specified in the Project Description.
    i. In addition to other remedies available at law or in equity, any disposal or conversion of property acquired, built, renovated, repaired, designed, or developed with Project funds without the Department's and the Board of Finance's express written approval will trigger the Department's right to reimbursement from Grantee of the Appropriated Amount, transfer proceeds from any disposition of property to the State, or otherwise provide consideration to the State for the Appropriated Amounts.
f. Grantee shall comply with all applicable federal and state laws, rules, and regulations pertaining to civil rights and equal employment opportunity.
    i. In accordance with all such laws, rules, and regulations, the Grantee agrees to assure that no person shall, on the grounds of race, color, national origin, sex, sexual preference, age, or handicap, be excluded from participation in the Project, use of the Project, employment with Grantee, or otherwise be denied benefits/subject to discrimination for any activity performed under this Agreement.
g. Where the Department, in its sole and absolute discretion, determines Grantee has failed to comply with the above conditions and restriction, Grantee agrees to take appropriate steps to correct any deficiencies immediately. The Grantee's failure to implement such appropriate steps within a reasonable time, but no longer than thirty (30) days after

Docusign Envelope ID: B69E7954-A830-4D78-AF50-806A2ADA6A8E

notice from the Department, constitutes a breach of this Agreement and grounds for Early Termination.

XI. REPRESENTATIONS AND WARRANTIES

A. Reliance by Department.
   a. Grantee expressly acknowledges that the Department relies on the representations and warranties made by Grantee in this Agreement. Grantee acknowledges that such representations and warranties are a material inducement for the Department to enter into this Agreement and provide the Appropriated Amount.
   b. Grantee shall ensure all representations and warranties provided herein are true, accurate, and complete as of the date of the Effective Date and shall remain so throughout the Term of this Agreement. Grantee is responsible for promptly notifying the Department in writing of any changes or inaccuracies in the representations and warranties contained herein.

B. Grantee hereby represents and warrants the following:

   a. Grantee has taken all necessary steps to attain the legal authority to receive and expend the Project's funds.
   b. Grantee has duly authorized this Agreement, and the person executing it has authority to do so. Once executed by Grantee, this Agreement shall constitute a binding obligation of Grantee, enforceable according to its terms.
   c. Grantee's obligations hereunder do not conflict with any law, ordinance, or resolution applicable to Grantee, Grantee's charter (if applicable), or any judgment or decree to which Grantee is subject.
   d. Grantee has independently confirmed that the Project Description, including, but not limited to, the Appropriated Amount and Reversion Date, is consistent with the underlying appropriation in law.
   e. Grantee's governing body has duly adopted or passed as an official act a resolution, motion, or similar action authorizing the person identified as the official representative of the Grantee to sign and submit Requests for Payment on behalf of Grantee.
   f. Grantee will abide by New Mexico laws regarding conflicts of interest, governmental conduct, and whistleblower protection.
      i. Grantee agrees explicitly none of its officers or employees or its designees or agents, no member of the governing body, and no other public official of Grantee who exercises any function or responsibility with respect to this Agreement, shall have any interest, direct or indirect, in any contract or subcontract, or the proceeds thereof, for the Project.
      ii. Further, Grantee will require all of its contractors to incorporate the language set forth in this paragraph prohibiting conflicts of interest in all subcontracts.
   g. No funds have been paid or will be paid, by or on behalf of the Grantee, to any person for influencing or attempting to influence an officer or employee of the State, any agency, or body in connection with the awarding of any Third Party Obligation.
      i. Grantee will require certifying language prohibiting lobbying to be included in the award documents for all subawards, including subcontracts, loans, and cooperative agreements.

Docusign Envelope ID: B69E7954-A830-4D78-AF50-806A2ADA6A8E

C. Consequences of False or Misleading Representations. If any representation or warranty made by Grantee is found to be false or misleading, the Department shall have the right to exercise any or all of the following remedies:

a. **Termination of Agreement:** Department may terminate this Agreement immediately upon written notice to the Grantee.
b. **Repayment of Grant Funds:** Grantee shall repay all Appropriated Amounts disbursed under this Agreement, upon demand by the Department.
c. **Other Remedies:** Department may pursue any other remedies available at law or in equity.

D. Survival of Representations and Warranties. The representations and warranties made by the Grantee shall survive the Early Termination or expiration of this Agreement.

XII. PROJECT RECORDS

A. Grantee shall be strictly accountable for receipts and disbursements relating to the Project's funds. The Grantee shall follow generally accepted accounting principles and the State's Model Accounting Practices and, if feasible, maintain a separate bank account or fund with a separate organizational code to ensure separate budgeting and accounting of the funds.

B. For six (6) years following the Project's completion ("**Record Retention Period**"), Grantee shall maintain all Project-related records, including, but not limited to, all financial records, requests for proposals, invitations to bid, selection and award criteria, contracts and subcontracts, advertisements, minutes of pertinent meetings, as well as records sufficient to fully account for the amount and disposition of the Appropriated Amount from all sources budgeted for the Project, the purpose for which such funds were used, and such other records as the Department may prescribe.

C. Grantee shall make all Project records available to the Department, the Department's Independent Public Accountant, and the New Mexico State Auditor upon request. With respect to the funds that are the subject of this Agreement, if the State Auditor or the Department finds any funds were improperly expended, Grantee shall be required to reimburse the State all amounts found to be improperly expended.

XIII. IMPROPERLY REIMBURSED FUNDS

If the Department determines part or all of the Appropriation Amount was improperly reimbursed to Grantee, including but not limited to funds reimbursed to Grantee based upon fraud, mismanagement, misrepresentation, misuse, violation of law by the Grantee, after ten (10) days' notice to Grantee and the opportunity to return such funds to the Department, the Department may offset any funds due to Grantee from the State, until the Appropriation Amount is fully repaid.

XIV. LIABILITY

Neither Party shall be responsible for liability incurred as a result of the other Party's acts or omissions in connection with this Agreement. Any liability incurred in connection with this Agreement is subject to

Docusign Envelope ID: B69E7954-A830-4D78-AF50-806A2ADA6A8E

immunities and limitations of the New Mexico Tort Claims Act.

XV. SCOPE OF AGREEMENT

This Agreement constitutes the entire and exclusive agreement between the Parties concerning the subject matter hereof. The Agreement supersedes all prior or contemporaneous agreements, understandings, discussions, communications, and representations, written or verbal.

XVI. REQUIRED NON-APPROPRIATIONS CLAUSE

A. Grantee acknowledges and agrees to include a "non-appropriations" clause in all contracts between it and other parties that are (i) funded in whole or part by funds made available under this Agreement and (ii) entered into after the effective date of this Agreement that states:

   a. "The terms of this Agreement are contingent upon sufficient appropriations and authorization being made by the Legislature of the State of New Mexico ("**Legislature**") for the performance of this Agreement.
   b. If the Legislature does not make sufficient appropriations and authorization, City of Santa Fe may immediately terminate this Agreement by giving Contractor written notice of such termination.
   c. The City of Santa Fe's decision as to whether sufficient appropriations are available shall be final and accepted by the Contractor. Contractor hereby waives any rights to assert an impairment of contract claim against the City of Santa Fe or the State of New Mexico in the event of immediate or Early Termination of this Agreement by the City of Santa Fe or the State Department of Finance and Administration."

XVII. REQUIRED TERMINATION CLAUSE

A. Grantee acknowledges and agrees to include the following termination clause in all contracts that are (i) funded in whole or part by funds made available under this Agreement and (ii) entered into after the effective date of this Agreement:

   a. "This contract is funded in whole or in part by funds made available by the State of New Mexico ("**State**"). Should the State terminate its Agreement with the City of Santa Fe, the City of Santa Fe may terminate this contract immediately by providing Contractor written notice of such termination.
   b. In the event of termination pursuant to this paragraph, the City of Santa Fe's only liability to Contractor shall be for goods and services delivered and accepted prior to the termination date."

XVIII. COMPLIANCE WITH UNIFORM FUNDING CRITERIA

A. Throughout the term of this Agreement, Grantee shall:

   a. Submit all reports of annual audits and agreed-upon procedures required by § 12-6-3(A)-(B), NMSA 1978 by the due dates established in § 2.2.2 NMAC, reports of which must be a

Docusign Envelope ID: B69E7954-A830-4D78-AF50-806A2ADA6A8E

public record pursuant to § 12-6-5(A), NMSA 1978 within forty-five (45) days of delivery to the State Auditor;

b. Have a duly adopted budget for the current fiscal year approved by its budgetary oversight agency (if any);
c. Timely submit all required financial reports to its budgetary oversight agency (if any); and
d. Use accounting methods and procedures consistent with Generally Accepted Accounting Principles and the State's Model Accounting Principals to expend the Appropriated Amount in accordance with applicable law and account for and safeguard Project funds and assets acquired with Project funds.

B. In the event Grantee fails to comply with the requirements of subparagraph A of this Article XVIII, Department may take one or more of the following actions:

a. Suspend new or further obligations pursuant to Article VI(A) of this Agreement;
b. Require the Grantee to develop and implement a written corrective action plan pursuant to Article VI(D) of this Agreement to remedy the non-compliance;
c. Impose special conditions to address the non-compliance by giving Grantee notice of such special conditions in accordance with Article III of this Agreement;
    i. The Parties agree that any special conditions imposed to address non-compliance shall be incorporated into this Agreement, through **Exhibit C**, upon notice to Grantee, without need for formal amendment of this Agreement;
    ii. Special conditions shall be binding and effective on the date that notice is deemed to have been given pursuant to Article III or
d. Terminate this Agreement pursuant to Article V(A) of this Agreement.

XIX. SEVERANCE TAX AND GENERAL OBLIGATION BONDS

A. Grantee acknowledges and agrees that the underlying appropriation for the Project may originate from the issuance of tax-exempt severance tax bonds or general obligation bonds by the State. Proceeds from such bonds are administered by the New Mexico State Board of Finance ("**SBOF**"), an entity separate and distinct from the Department.

a. Grantee acknowledges and agrees:
    i. It is Grantee's responsibility to determine through SBOF what (if any) conditions are currently imposed on the Project;
    ii. Department's failure to inform Grantee of an SBOF-imposed condition does not affect the validity or enforceability of the condition;
    iii. The SBOF may in the future impose further or different conditions upon the Project;
    iv. All SBOF conditions are attached to the Project and Appropriation Amount without the need for formal amendment of this Agreement;
    v. All applicable SBOF conditions must be satisfied before the SBOF will release to the Department funds subject to the condition(s) and
    vi. The Department's obligation to reimburse Grantee from the Project is expressly contingent upon the satisfaction of the then-current SBOF conditions.

B. Grantee acknowledges and agrees SBOF may, at its sole and absolute discretion, require reimbursement or remove eligibility for bond proceeds for the Project if the Project doesn't

Docusign Envelope ID: B69E7954-A830-4D78-AF50-806A2ADA6A8E

proceed sufficiently.

a. Grantee must comply with the requirement to encumber five percent (5%) of Project funds within six months of bond issuance as certified by Grantee in the Bond Questionnaire and Certification documents submitted to the SBOF.
b. Failure to comply may result in the reassignment of the bond proceeds. Upon reassignment of bond proceeds, this Agreement will be suspended until the entity has demonstrated readiness as determined by the SBOF and the Department.

C. Grantee acknowledges and agrees that this Agreement is subject to the SBOF's Bond Project Disbursements rule, § 2.61.6, NMAC, as may be amended from time to time or re-codified.

XX. GENERAL PROVISIONS

A. Assignment: Grantee's rights and obligations under this Agreement are personal and may not be transferred or assigned without the prior written consent of the State. Any attempt at assignment or transfer without such consent shall be void. Any assignment or transfer of Grantee's rights and obligations approved by the State shall be subject to the provisions of this Agreement.

B. Subcontractors: Grantee shall not enter any subgrant or subcontract in connection with its obligations under this Agreement without the prior written approval of the State. Upon request, Grantee shall submit to the Department a copy of each such subgrant or subcontract.

C. Binding Effect: Except as otherwise provided, all provisions of this Agreement, including the benefits and burdens, shall extend to and be binding upon the Parties' respective successors and assigns.

D. Authority: Each Party represents and warrants to the other that the execution and delivery of this Agreement and the performance of such Party's obligations have been duly authorized.

E. Captions and References: The captions and headings in this Agreement are for the convenience of reference only and shall not be used to interpret, define, or limit its provisions. All references in this Agreement to sections (whether spelled out or using the § symbol), subsections, exhibits, or other attachments are references to sections, subsections, exhibits, or other attachments contained herein or incorporated as a part hereof, unless otherwise noted.

F. Counterparts: This Agreement may be executed in multiple, identical, original counterparts, each of which shall be deemed to be an original, but all of which, taken together, shall constitute the same agreement.

G. Digital Signatures: If any signatory signs this agreement using a digital signature in accordance with the State Policies regarding the use of digital signatures, then any agreement or consent to use digital signatures within the electronic system through which that signatory signed shall be incorporated into this Agreement by reference.

H. Modification: Except as otherwise provided in this Agreement, any modification to this Agreement shall only be effective if agreed to in a formal amendment, properly executed and approved in accordance with applicable New Mexico law and State fiscal policies and rules.

Docusign Envelope ID: B69E7954-A830-4D78-AF50-806A2ADA6A8E

Modifications permitted under this Agreement, other than Agreement amendments, shall conform to the policies issued by the State.

I. Statutes, Regulations, Fiscal Rules, and Other Authority: Any reference in this Agreement to a statute, regulation, policy, or other authority shall be interpreted to refer to such authority then current, as may have been changed or amended after the Effective Date of this Agreement.

J. External Terms and Conditions: Notwithstanding anything to the contrary herein, the State shall not be subject to any provision included in any terms, conditions, or agreements appearing on Grantee's or a subcontractor's website or any provision incorporated into any click-through or online agreements related to the Work unless that provision is specifically referenced in this Agreement.

K. Severability: The invalidity or unenforceability of any provision of this Agreement shall not affect the validity or enforceability of any other provision of this Agreement, which shall remain in full force and effect, provided that the Parties can continue to perform their obligations under this Agreement in accordance with its intent.

L. Survival of Certain Agreement Terms: Any provision of this Agreement that imposes an obligation on a Party after the termination or expiration of this Agreement shall survive the termination or expiration of this Agreement and shall be enforceable by the other Party.

M. Third Party Beneficiaries: Except for the Parties' respective successors and assigns described in this Agreement, it does not and is not intended to confer any rights or remedies upon any person or entity other than the Parties. Enforcement of this Agreement and all rights and obligations hereunder are reserved solely to the Parties. Any services or benefits that third parties receive as a result of this Agreement are incidental to this Agreement and do not create any rights for such third parties.

N. Waiver: A Party's failure or delay in exercising any right, power, or privilege under this Agreement, whether explicit or by lack of enforcement, shall not operate as a waiver, nor shall any single or partial exercise of any right, power, or privilege preclude any other or further exercise of such right, power, or privilege.

O. Standard and Manner of Performance: Grantee shall perform its obligations under this Agreement in accordance with the highest standards of care, skill, and diligence in Grantee's industry, trade, or profession.

P. Licenses, Permits, and Other Authorizations: Grantee shall secure, prior to the Effective Date, and maintain at all times during the term of this Agreement, at its sole expense, all licenses, certifications, permits, and other authorizations required to perform its obligations under this Agreement and shall ensure that all employees, agents, and subcontractors secure and maintain at all times during the term of their employment, agency or subcontractor, all license, certifications, permits and other authorizations required to perform their obligations in relation to this Agreement.

Q. Publicity: Any Publicity regarding the subject matter of this Agreement may not be released without prior written approval from the Department. For purposes of this agreement, "**Publicity**"

Docusign Envelope ID: B69E7954-A830-4D78-AF50-806A2ADA6A8E

means notices, informational pamphlets, press releases, email responses, research, reports, signs, and similar public notices prepared by or for the Grantee or jointly with others.

a. Grantee shall obtain written approval prior to issuing any press release or making any public announcement regarding this agreement. Grantee agrees to obtain approval of the Department in advance with respect to all Public Relations, all communications with media, or all communications with any other member of the public with respect to this agreement, except to acknowledge that an agreement does exist.
b. For purposes of this agreement, "Public Relations" includes community relations and means those activities dedicated to maintaining the Department's image or maintaining or promoting understanding and favorable relations with the community or public at large or any segment of the public.
c. Violations of either Article XX (Q)(a) or (b) shall constitute a material Breach of Agreement.

R. Data Sharing: The State intends to secure and collate specific data generated by Grantee under this Agreement to use in support of the State's organizational, policy-making, and management of public resource functions. State, in accordance with **Exhibit E**, attached hereto and incorporated herein by reference, reserves the right to require Grantee and/or its subcontractors to provide specific data relevant to the above-listed functions. Data provided by Grantee may be incorporated into existing or future developed State integrated analysis tools or databases, including but not limited to geographic information system (GIS) networks and databases accessible by the public. Dissemination of data collected may include historical data and projections based on such historical data.

a. To the extent any data transferred as part of this Agreement is legally determined to be the property of Subrecipient or its subcontractors, Subrecipient and/or its subcontractors grants State a nonexclusive, fully paid-up right and license to reproduce, use, distribute, do derivative works based on, and archive data transferred as part of this Agreement.

S. Venue and Choice of Law: This Agreement shall be governed by and construed in accordance with the laws of the State of New Mexico, without regard to any conflict of law provisions. Any legal suit, action, or proceeding arising out of or related to this Agreement shall be instituted exclusively in the district courts located in Santa Fe, New Mexico. The Parties hereby irrevocably submit to the exclusive jurisdiction and venue of such courts in any such suit, action, or proceeding. The Parties waive any objection to the laying of the venue of any such suit, action, or proceeding in the district courts of Santa Fe, New Mexico, and irrevocably waive and agree not to plead or claim in any such court that any such suit, action, or proceeding brought in any such court has been brought in an inconvenient forum.

[SIGNATURE PAGE AND EXHIBITS FOLLOW]
[THIS SPACE LEFT BLANK INTENTIONALLY]

IN WITNESS WHEREOF, the parties have duly executed this Agreement as of the Department's date of execution.

APPROVED BY DEPARTMENT:

Cabinet Secretary, Wayne Propst:

Signed by:
6EB4D958A89A432...
Signature

11/21/2025
Date

Chief Financial Officer, Mackie Romero:

DocuSigned by:
6CA6727E89F840B...
Signature

11/21/2025
Date

Local Government Division Director, Cecilia Mavrommatis:

Signed by:
C7E9C597313E484...
Signature

11/21/2025
Date

AS TO LEGAL FORM AND SUFFICIENCY

General Counsel's Office:

Signed by:
8F9C3BE14553478...
Signature

George Hypolite
(Print Name)

General Counsel
(Title)

Docusign Envelope ID: B69E7954-A830-4D78-AF50-806A2ADA6A8E

APPROVED BY GRANTEE:

City of Santa Fe

Entity Name

Official with Authority to Bind Grantee:

Alan Webber (Nov 1, 2025 11:27:17 MDT)

Signature

Mayor

(Title)

Alan Webber

(Print Name)

11/01/2025

Date

ATTEST:

ANDREA SALAZAR (Nov 2, 2025 19:25:50 MST)

ANDRÉA SALAZAR, CITY CLERK

11/02/2025

Date

GB MTG 10-29-25

Fiscal Officer or Chief Financial Officer:

Emily K. Oster

EMILY OSTER, FINANCE DIRECTOR

10/06/2025

Date

As To Legal Form And Sufficiency

Kevin L. Nault

Kevin L. Nault (Aug 19, 2025 17:00:49 MDT)

KEVIN NAULT, ASSISTANT CITY ATTORNEY

Aug 19, 2025

Date

Docusign Envelope ID: B69E7954-A830-4D78-AF50-806A2ADA6A8E

EXHIBIT A

Request for Payment Form and Certification

STATE OF NEW MEXICO
GRANT APPROPRIATION
Request for Payment Form
Exhibit A

I. Grantee Information (Must match your DFA Substitute W-9 Form)

A. Grantee: _____
B. Address: _____
(Complete Mailing, including Suite, if applicable)
_____
City, State, Zip
C. Contact Name/Phone #: _____
D. Grant No: _____
E. Project Title: _____
F. Grant Expiration Date: _____

II. Payment Computation

A. Payment Request No. _____
B. Grant Amount: $ 0.00
C. AIPP Amount *(If Applicable)*: $ 0.00
D. Funds Requested to Date: $ 0.00
E. Amount Requested this Payment: _____
F. Reversion Amount *(if applicable)*: $ 0.00
G. Grant Balance: $ 0.00
H. ☐ Final Request for Payment *(if applicable)*

III. Fiscal Year : 2026 (July 1, 2025-June 30, 2026)

(The State of NM Fiscal Year is July 1, 20XX through June 30, 20XX of the following year)

IV. Certifications

☐ I hereby certify that all conditions and requirements for Payments outlined in the Agreement have been met, including but not limited to:
a. Submission and approval of a Project Budget as per Article IV, Section A of the Agreement.
b. Compliance with the Project Budget and expenditure of funds in accordance with the State Procurement Code and the State's Model Accounting Practices.
c. Submission of supporting documentation as required by the Agreement.
d. Maintenance of all necessary records and documentation as stipulated in the Agreement.

☐ I attest that the information provided is correct; expenditures are properly documented and valid or actual receipts, and that the activity fully complies with Article IX, Sec. 14 of the New Mexico Constitution, known as the "anti-donation" clause.

☐ I hereby certify that all representations and warranties made in the Agreement remain true, accurate, and complete as of the date of this request, and will continue to be so throughout the term of the Agreement. I acknowledge that these representations and warranties are a material inducement for the Department to approve this pay request.

_____ _____
Grantee Fiscal Officer or **Fiscal Agent** *(if applicable)* **Grantee Representative**

_____ _____
Printed Name Printed Name

Date: _____ Date: _____

(State Agency Use Only)

Vendor Code: _____ Fund No.: _____ PO # _____ Loc No.: _____

I certify that the State Agency financial and vendor file information agree with the above submitted information.

_____ _____
ASD Officer Date Division Grant Manager Date

Revised 7/2025

[THIS SPACE LEFT BLANK INTENTIONALLY]

Docusign Envelope ID: B69E7954-A830-4D78-AF50-806A2ADA6A8E

EXHIBIT B

Notice of Department's Obligation Form

NOTICE OF OBLIGATION TO REIMBURSE GRANTEE
EXHIBIT B

Notice of Obligation to Reimburse Grantee # _____

DATE: _____

TO: Department Representative: _____, Grant Manager

FROM: Grantee Entity: _____

Grantee Official Representative: _____

SUBJECT: Notice of Obligation to Reimburse Grantee

Grant Number: _____

Grant Termination Date: _____

As the designated representative of the Department for Grant Agreement number _____ entered into between Grantee and the Department, I certify that the Grantee has submitted to the Department the following third party obligation executed, in writing, by the third party's authorized representative:

Vendor or Contractor: _____

Third Party Obligation Amount: _____

Vendor or Contractor: _____

Third Party Obligation Amount: _____

I certify that the State is issuing this Notice of Obligation to Reimburse Grantee for permissible purposes within the scope of the project description, subject to all the terms and conditions of the above referenced Grant Agreement.

Grant Amount (Minus AIPP if applicable): _____

The Amount of this Notice of Obligation: _____

The Total Amount of all Previously Issued Notices of Obligation: _____

The Total Amount of all Notices of Obligation to Date: $ 0.00

Note: Contract amounts may exceed the total grant amount, but the invoices paid by the grant will not exceed the grant amount.

Department Rep. Approver: _____

Title: Grant Manager

Signature: _____

Date: _____

1 Administrative and/or Indirect Cost – generally, the legislation authorizing the issuance of bonds prohibits the use of its proceeds for indirect expenses (e.g. penalty fees or damages other than pay for work performed, attorney fees, and administrative fees). Such use of bond proceeds shall not be allowed unless specifically authorized by statute.

Revised 7/2025

[THIS SPACE LEFT BLANK INTENTIONALLY]

Docusign Envelope ID: B69E7954-A830-4D78-AF50-806A2ADA6A8E

EXHIBIT C

Special Conditions (If Fiscal Agent Required or Anti Donations Issues Exist)

OPTIONAL EXHIBIT C
SPECIAL CONDITIONS

The capital outlay oversight requires grantees' accounting methods and procedures, including their internal control framework, to be scrutinized, so as to safeguard State capital outlay appropriations and assets acquired with such appropriations.

This Capital Outlay Special Grant Condition(s) **Exhibit C** is necessary pursuant to § 6-3b-1 et seq., NMSA 1978 (Public Finance Accountability Act) and MAPS Fin 9.2, due to the Grantees' material weaknesses, significant deficiencies, or findings that raised concerns as to the ability to expend grant funds in accordance with applicable law in the organization's FY[20XX] audit. The Special Conditions identified below apply to the authorized agent, [insert the Grantee or Fiscal Agent name].

Procurement - All purchases or contracts the Grantee enters that shall use funding from the Department capital appropriations grant must be approved by the Department prior to the initiation of implementing purchasing documents. The Grantee shall receive such prior approval via official correspondence from the Department, which may be through letter or email. The Grantee shall submit the following to the Department in pursuit of prior approval: purchasing policies and procedures, CFO certification, documentation of management and program approval, policies and procedures governing purchasing and contracting, a copy of the current procurement and contracting policies, and documentation regarding informing staff responsible for purchasing and contracting on such policies and procedures.

Budget - Provide documentation of approval of your current budget from DFA Local Government or other authoritative agency. Provide policies and procedures on who is responsible for and how annual budgets (expenditures and revenue) are established, monitored and adjusted. Provide a corrective action plan on how budget issues identified in your audit will be/have been addressed. Also include documentation on how staff responsible for budgeting is informed on budget policies and procedures.

Capital Assets - Provide a complete list of inventory including inventory control numbers and current location. Provide policies and procedures on capital assets and inventory and specify how the proposed purchased items will be included, tagged, and tracked in capital asset inventory. Also include documentation on how staff responsible for capital assets is informed on capital asset policies and procedures.

Travel and Per Diem - Provide policies and procedures on travel and per diem. Also include how staff who travel and those responsible for travel reimbursement are informed on travel and per diem policies and procedures.

Timely Audits – Provide policies and procedures on annual audits. Provide documentation on how and who is responsible for insuring that annual audits are completed timely. Also include documentation on how staff responsible for the annual audit is informed on audit policies and procedures.

Cash Management – policies and procedures on cash management of federal funds. Provide procedures used to draw and disburse federal funds. Provide procedures to reconcile draw amounts, deposits and disbursements; and to prepare federal cash reporting documents to ensure compliance with federal regulations.

The <Grantee> was required to, and has provided sufficient documentation regarding [insert specific names of the Special Condition(s)], as referenced in the <Grantee>'s [20XX] Audit file. Therefore, the criteria to enter into this agreement have been met.

[THIS SPACE LEFT BLANK INTENTIONALLY]

Docusign Envelope ID: B69E7954-A830-4D78-AF50-806A2ADA6A8E

EXHIBIT D

Project Budget Worksheet *
*(Provided separately when grant agreement issued to Grantee)

[THIS SPACE LEFT BLANK INTENTIONALLY]

Docusign Envelope ID: B69E7954-A830-4D78-AF50-806A2ADA6A8E

Exhibit E

Data Sharing Provisions for New Mexico Capital Outlay Agreements

I. Introduction:

This Data Sharing Provisions Exhibit ("Exhibit") is incorporated into the New Mexico Capital Outlay Agreements ("Agreements") between the State of New Mexico ("State") and [Insert Partner Name] ("Partner"). This Exhibit outlines the terms and conditions under which data will be shared between the Parties to ensure compliance with New Mexico state laws and regulations, focusing on data privacy, security, and compliance.

II. Definitions:

a. Authorized User: An employee, agent, assign, representative, independent contractor, or other person or entity authorized by Partner or State to access, use, or disclose information through this exhibit.

b. Confidential Information: All data or information shared in confidence, with the expectation that it will not be disclosed in an identifiable form. This includes data that is exempt from public disclosure under the New Mexico Inspection of Public Records Act (§ 14-2-1 et seq. NMSA 1978) or other relevant laws.

c. Data Storage: Electronic media that hold recorded information.

d. Data Transmission: The process of moving information over a network from its source to one or more destinations.

e. Direct Identifier: Records or data containing personal identifiers such as names, addresses, and social security numbers.

f. Disclosure: Permission to access, release, transfer, or otherwise communicate confidential information by any means to any third party, except as authorized by the Party that controls the record.

g. Encryption involves using algorithms to encode data, rendering it unreadable without a specific key. It may be necessary during data transmission and/or storage.

h. Information: Any data, figures, statistics, or other facts provided or learned about someone or something, including Confidential Information, that may be legally transmitted under this Exhibit.

i. Limited Dataset: A data file that omits Direct Identifiers.

j. Protected Personally Identifiable Information: Sensitive personal details such as social security numbers and financial account numbers, with specific exclusions as outlined in the Agreements.

III. Purpose:

The purpose of this exhibit is to promote transparency, facilitate information sharing between the parties, support better policy and decision-making, and enhance public services through collaborative

[THIS SPACE LEFT BLANK INTENTIONALLY]

Docusign Envelope ID: B69E7954-A830-4D78-AF50-806A2ADA6A8E

data analysis from various sources.

IV. Use of Information:

a. Use of Information obtained or created under this exhibit shall be strictly limited to the purposes stated herein and in the agreements. The parties agree not to sell Information to third parties or use it for commercial, solicitation, or political purposes.

b. Each Party shall serve as the custodian of the Information and comply with all conditions for its use, including security measures to prevent unauthorized access.

c. The Parties shall follow all relevant federal and state laws and regulations governing the use of such Information.

V. Safeguarding Information:

a. Confidentiality: Access to Confidential Information shall be limited to the minimum necessary to accomplish the purposes of this Exhibit. Authorized Users must adhere to the confidentiality requirements.

b. Security: Security practices shall comply with the requirements of the New Mexico Department of Information Technology Act and related regulations. The Parties agree to notify each other within three business days of any suspected or actual security breach.

c. Information Storage and Transmission: Data Storage and Transmission shall take place on an encrypted server with appropriate security controls.

VI. Re-Disclosure of Information:

The Parties agree not to disclose Information except as required by law or with prior written approval of the other Party. If there is a public records request, the Party receiving it shall notify the other Party within three business days.

VII. Ownership of Information:

Legal title to Information shall remain with the provider. The Partner grants the State a royalty-free, non-exclusive, non-transferable license to use the Information in furtherance of the purposes outlined in this Exhibit.

Docusign Envelope ID: B69E7954-A830-4D78-AF50-806A2ADA6A8E

Signature: STEN JOHNSON

Email: sajohnson@santafenm.gov

Signature: BRIAN MOYA

Email: bjmoya@santafenm.gov

Docusign Envelope ID: B69E7954-A830-4D78-AF50-806A2ADA6A8E

Signature: 

Email: xivigil@santafenm.gov

BUSINESS REGISTRATION

VILLAGE OF LOS RANCHOS DE ALBUQUERQUE
6718 Rio Grande Blvd. NW • Los Ranchos, NM 87107 • (505) 344-6582

411 EQUIPMENT, LLC
7324 4th Street NW
Los Ranchos, NM 87107

PERMIT NO: 1843
BUSINESS TYPE: Commercial
EXPIRES: December 31, 2024

The issuance of this business license has been done so in accordance with Village Code §3.1.1-7 and approved by the planning and zoning department. Issuance of this license shall in no way relieve the Licensee of compliance with any and/or all applicable Village Codified Ordinances. This license is valid for the 2024 calendar year.

Danielle Sedillo-Molina — 06/06/2024
Village Clerk — Date

-DISPLAY IN A CONSPICUOUS PLACE-
NOT TRANSFERABLE

losranchosnm.gov

VLR.BL.2024

ACORD

CERTIFICATE OF LIABILITY INSURANCE

DATE (MM/DD/YYYY) 8/6/2025

THIS CERTIFICATE IS ISSUED AS A MATTER OF INFORMATION ONLY AND CONFERS NO RIGHTS UPON THE CERTIFICATE HOLDER. THIS CERTIFICATE DOES NOT AFFIRMATIVELY OR NEGATIVELY AMEND, EXTEND OR ALTER THE COVERAGE AFFORDED BY THE POLICIES BELOW. THIS CERTIFICATE OF INSURANCE DOES NOT CONSTITUTE A CONTRACT BETWEEN THE ISSUING INSURER(S), AUTHORIZED REPRESENTATIVE OR PRODUCER, AND THE CERTIFICATE HOLDER.

IMPORTANT: If the certificate holder is an ADDITIONAL INSURED, the policy(ies) must have ADDITIONAL INSURED provisions or be endorsed. If SUBROGATION IS WAIVED, subject to the terms and conditions of the policy, certain policies may require an endorsement. A statement on this certificate does not confer rights to the certificate holder in lieu of such endorsement(s).

PRODUCER	CONTACT NAME:	
Charles L. Crane Agency Co. 400 Chesterfield Center Suite 100 Chesterfield, MO 63017	PHONE (A/C, No, Ext): (636) 537-5000	FAX (A/C, No): (636) 537-5009
	E-MAIL ADDRESS:	

INSURER(S) AFFORDING COVERAGE	NAIC #
INSURER A : Travelers Indemnity Co of CT	25682
INSURER B : Travelers Indemnity Co.	25658
INSURER C : Travelers Prop Cas Co of Amer	25674
INSURER D : Travelers Indemnity of America	25666
INSURER E : Transguard Ins Co of America	28886
INSURER F :	

INSURED

411 Equipment LLC
7324 4th St NW
Los Ranchos, NM 87107

COVERAGES **CERTIFICATE NUMBER:** **REVISION NUMBER:**

THIS IS TO CERTIFY THAT THE POLICIES OF INSURANCE LISTED BELOW HAVE BEEN ISSUED TO THE INSURED NAMED ABOVE FOR THE POLICY PERIOD INDICATED. NOTWITHSTANDING ANY REQUIREMENT, TERM OR CONDITION OF ANY CONTRACT OR OTHER DOCUMENT WITH RESPECT TO WHICH THIS CERTIFICATE MAY BE ISSUED OR MAY PERTAIN, THE INSURANCE AFFORDED BY THE POLICIES DESCRIBED HEREIN IS SUBJECT TO ALL THE TERMS, EXCLUSIONS AND CONDITIONS OF SUCH POLICIES. LIMITS SHOWN MAY HAVE BEEN REDUCED BY PAID CLAIMS.

INSR LTR	TYPE OF INSURANCE	ADDL INSD	SUBR WVD	POLICY NUMBER	POLICY EFF (MM/DD/YYYY)	POLICY EXP (MM/DD/YYYY)	LIMITS	
A	X COMMERCIAL GENERAL LIABILITY CLAIMS-MADE X OCCUR GEN'L AGGREGATE LIMIT APPLIES PER: POLICY PRO-JECT LOC OTHER:			Y6607T196352TCT24	8/9/2025	8/9/2026	EACH OCCURRENCE DAMAGE TO RENTED PREMISES (Ea occurrence) MED EXP (Any one person) PERSONAL & ADV INJURY GENERAL AGGREGATE PRODUCTS - COMP/OP AGG	$ 1,000,000 $ 100,000 $ 5,000 $ 1,000,000 $ 2,000,000 $ 2,000,000
B	AUTOMOBILE LIABILITY X ANY AUTO OWNED AUTOS ONLY SCHEDULED AUTOS X HIRED AUTOS ONLY NON-OWNED AUTOS ONLY			AD5R4505152414	8/9/2025	8/9/2026	COMBINED SINGLE LIMIT (Ea accident) BODILY INJURY (Per person) BODILY INJURY (Per accident) PROPERTY DAMAGE (Per accident) Physical Damage	$ 1,000,000 $ $ $ $
C	X UMBRELLA LIAB X OCCUR EXCESS LIAB CLAIMS-MADE DED X RETENTION $ 10,000			CUP0P4186602414	8/9/2025	8/9/2026	EACH OCCURRENCE AGGREGATE	$ 1,000,000 $ 1,000,000 $
D	WORKERS COMPENSATION AND EMPLOYERS' LIABILITY ANY PROPRIETOR/PARTNER/EXECUTIVE OFFICER/MEMBER EXCLUDED? Y / N (Mandatory in NH) If yes, describe under DESCRIPTION OF OPERATIONS below	N / A		UB0P4100842414G	8/9/2025	8/9/2026	X PER STATUTE OTH-ER E.L. EACH ACCIDENT E.L. DISEASE - EA EMPLOYEE E.L. DISEASE - POLICY LIMIT	 $ 500,000 $ 500,000 $ 500,000
B	Garage Liability			AD5R4505152414	8/9/2025	8/9/2026	$1,000,000 EaAcc/Agg	3,000,000
E	Dealer Equipment in			IMP4002872	8/9/2025	8/9/2026	Lieu Garage Keepers	2,500,000

DESCRIPTION OF OPERATIONS / LOCATIONS / VEHICLES (ACORD 101, Additional Remarks Schedule, may be attached if more space is required)

CERTIFICATE HOLDER

City of Santa Fe
PO Box 909
Santa Fe, NM 87504-0909

CANCELLATION

SHOULD ANY OF THE ABOVE DESCRIBED POLICIES BE CANCELLED BEFORE THE EXPIRATION DATE THEREOF, NOTICE WILL BE DELIVERED IN ACCORDANCE WITH THE POLICY PROVISIONS.

AUTHORIZED REPRESENTATIVE



© 1988-2015 ACORD CORPORATION. All rights reserved.
The ACORD name and logo are registered marks of ACORD

Form **W-9**
(Rev. March 2024)
Department of the Treasury
Internal Revenue Service

Request for Taxpayer Identification Number and Certification

Go to *www.irs.gov/FormW9* for instructions and the latest information.

Give form to the requester. Do not send to the IRS.

Before you begin. For guidance related to the purpose of Form W-9, see *Purpose of Form*, below.

Print or type. See *Specific Instructions* on page 3.

1 Name of entity/individual. An entry is required. (For a sole proprietor or disregarded entity, enter the owner's name on line 1, and enter the business/disregarded entity's name on line 2.)

411 Equipment LLC

2 Business name/disregarded entity name, if different from above.

3a Check the appropriate box for federal tax classification of the entity/individual whose name is entered on line 1. Check only **one** of the following seven boxes.

☐ Individual/sole proprietor ☐ C corporation ☐ S corporation ☐ Partnership ☐ Trust/estate

☑ LLC. Enter the tax classification (C = C corporation, S = S corporation, P = Partnership) . . . . S

Note: Check the "LLC" box above and, in the entry space, enter the appropriate code (C, S, or P) for the tax classification of the LLC, unless it is a disregarded entity. A disregarded entity should instead check the appropriate box for the tax classification of its owner.

☐ Other (see instructions)

3b If on line 3a you checked "Partnership" or "Trust/estate," or checked "LLC" and entered "P" as its tax classification, and you are providing this form to a partnership, trust, or estate in which you have an ownership interest, check this box if you have any foreign partners, owners, or beneficiaries. See instructions . . . . . ☐

4 Exemptions (codes apply only to certain entities, not individuals; see instructions on page 3):

Exempt payee code (if any)

Exemption from Foreign Account Tax Compliance Act (FATCA) reporting code (if any)

(Applies to accounts maintained outside the United States.)

5 Address (number, street, and apt. or suite no.). See instructions.

7324 4th St NW

Requester's name and address (optional)

6 City, state, and ZIP code

Los Ranchos, NM 87107-6626

7 List account number(s) here (optional)

Part I Taxpayer Identification Number (TIN)

Enter your TIN in the appropriate box. The TIN provided must match the name given on line 1 to avoid backup withholding. For individuals, this is generally your social security number (SSN). However, for a resident alien, sole proprietor, or disregarded entity, see the instructions for Part I, later. For other entities, it is your employer identification number (EIN). If you do not have a number, see *How to get a TIN*, later.

Note: If the account is in more than one name, see the instructions for line 1. See also *What Name and Number To Give the Requester* for guidelines on whose number to enter.

Social security number

☐☐☐ – ☐☐ – ☐☐☐☐

or

Employer identification number

8 4 – 2 0 7 8 0 9 8

Part II Certification

Under penalties of perjury, I certify that:

1. The number shown on this form is my correct taxpayer identification number (or I am waiting for a number to be issued to me); and
2. I am not subject to backup withholding because (a) I am exempt from backup withholding, or (b) I have not been notified by the Internal Revenue Service (IRS) that I am subject to backup withholding as a result of a failure to report all interest or dividends, or (c) the IRS has notified me that I am no longer subject to backup withholding; and
3. I am a U.S. citizen or other U.S. person (defined below); and
4. The FATCA code(s) entered on this form (if any) indicating that I am exempt from FATCA reporting is correct.

Certification instructions. You must cross out item 2 above if you have been notified by the IRS that you are currently subject to backup withholding because you have failed to report all interest and dividends on your tax return. For real estate transactions, item 2 does not apply. For mortgage interest paid, acquisition or abandonment of secured property, cancellation of debt, contributions to an individual retirement arrangement (IRA), and, generally, payments other than interest and dividends, you are not required to sign the certification, but you must provide your correct TIN. See the instructions for Part II, later.

Sign Here Signature of U.S. person Shan Herrera Date 10-02-25

General Instructions

Section references are to the Internal Revenue Code unless otherwise noted.

Future developments. For the latest information about developments related to Form W-9 and its instructions, such as legislation enacted after they were published, go to *www.irs.gov/FormW9*.

What's New

Line 3a has been modified to clarify how a disregarded entity completes this line. An LLC that is a disregarded entity should check the appropriate box for the tax classification of its owner. Otherwise, it should check the "LLC" box and enter its appropriate tax classification.

New line 3b has been added to this form. A flow-through entity is required to complete this line to indicate that it has direct or indirect foreign partners, owners, or beneficiaries when it provides the Form W-9 to another flow-through entity in which it has an ownership interest. This change is intended to provide a flow-through entity with information regarding the status of its indirect foreign partners, owners, or beneficiaries, so that it can satisfy any applicable reporting requirements. For example, a partnership that has any indirect foreign partners may be required to complete Schedules K-2 and K-3. See the Partnership Instructions for Schedules K-2 and K-3 (Form 1065).

Purpose of Form

An individual or entity (Form W-9 requester) who is required to file an information return with the IRS is giving you this form because they

Signature: Daniel Garcia (Dec 23, 2025 13:40:56 MST)

Email: dagarcia@santafenm.gov

Signature: SCOTT OUDERKIRK (Dec 23, 2025 13:42:46 MST)

Email: slouderkirk@santafenm.gov

GB-200-411 Equipment LLC

Final Audit Report 2026-01-12

Created:	2026-01-02
By:	ALYSSA PEREZ (aeperez@santafenm.gov)
Status:	Signed
Transaction ID:	CBJCHBCAABAA_ms2VQxJ9CrYDE5wChSPDrRG-aXLKRX8

"GB-200-411 Equipment LLC" History

Document created by ALYSSA PEREZ (aeperez@santafenm.gov)
2026-01-02 - 5:53:28 PM GMT- IP address: 63.232.20.2

Document emailed to ajhopkins@santafenm.gov ajhopkins@santafenm.gov (ajhopkins@santafenm.gov) for signature
2026-01-02 - 5:56:31 PM GMT

Email viewed by ajhopkins@santafenm.gov ajhopkins@santafenm.gov (ajhopkins@santafenm.gov)
2026-01-05 - 8:07:06 PM GMT- IP address: 104.47.65.254

Document e-signed by ajhopkins@santafenm.gov ajhopkins@santafenm.gov (ajhopkins@santafenm.gov)
Signature Date: 2026-01-05 - 8:07:46 PM GMT - Time Source: server- IP address: 63.232.20.2

Document emailed to ERIKA LUJAN (evlujan@santafenm.gov) for signature
2026-01-05 - 8:07:49 PM GMT

Document e-signed by ERIKA LUJAN (evlujan@santafenm.gov)
Signature Date: 2026-01-12 - 3:33:48 PM GMT - Time Source: server- IP address: 63.232.20.2

Document emailed to Rebecca Lovato-Sanouvong (ralovatosanouvong@santafenm.gov) for signature
2026-01-12 - 3:33:52 PM GMT

Email viewed by Rebecca Lovato-Sanouvong (ralovatosanouvong@santafenm.gov)
2026-01-12 - 4:00:36 PM GMT- IP address: 104.47.64.254

Document e-signed by Rebecca Lovato-Sanouvong (ralovatosanouvong@santafenm.gov)
Signature Date: 2026-01-12 - 4:01:31 PM GMT - Time Source: server- IP address: 63.232.20.2

Document sent to JoAnn Lovato (jdlovato@santafenm.gov) and Travis Dutton-Leyda (tkduttonleyda@santafenm.gov) for signature. One of them to sign
2026-01-12 - 4:01:34 PM GMT

Powered by Adobe Acrobat Sign

Document e-signed by Travis Dutton-Leyda (tkduttonleyda@santafenm.gov)

Signature Date: 2026-01-12 - 6:24:30 PM GMT - Time Source: server- IP address: 63.232.20.2

Agreement completed.

2026-01-12 - 6:24:30 PM GMT

Powered by
Adobe
Acrobat Sign

CITY OF SANTA FE

The Purchasing Memo

Date: December 23, 2025

To: Governing Body, Finance Committee, and Public Works & Utilities Committee

From: Daniel Garcia, Fire Fleet Manager Daniel Garcia

Via: Scott Ouderkirk, Interim Fire Chief SCOTT OUDERKIRK

Subject: 2025 Ferrara Custom Cinder Fire Engine/Pumper

Vendor Name: 411 Equipment LLC

Munis Vendor Number: 8725

ITEM AND ISSUE:

Fire Department respectfully requests your approval to purchase a 2025 Ferrara Custom Cinder Fire Engine/Pumper totaling $980,043.00 with 411 Equipment, LLC.

CONTRACT NUMBER:

NA – utilizing CES Contract #2024-25-C115-All.

BACKGROUND AND SUMMARY:

The City of Santa Fe Fire Department received a grant award (Item #25-0500, Appropriation #25-J3150) in the amount of $525,000.00 from The State of New Mexico Department of Finance & Administration (DFA). Additionally, The New Mexico Public Relations Commission State Fire Marshal Division provided approval to purchase a 2025 Ferrara Custom Cinder Fire Engine/Pumper. Santa Fe Fire Department requests to purchase a new fire engine for the Operations Division. This apparatus will replace the current aged-out unit which has high mileage due to heavy utilization in the field. Fire Department will purchase the apparatus from 411 Equipment, LLC. located in Albuquerque.

PRIOR APPROVALS AND SUPPORTING INFORMATION:

FUNDING SOURCE:

Fund Name/Number: Emergency Services/Fund 221

Munis Org Name/Number: Fire Support Services/2210181

Munis Object Name/Number: Vehicles > 1.5 Tons/571000

Budget Officer / Designee: Andy Hopkins **Date:** 01/05/2026

Budget Officer Comment/Exceptions: _____

PROCUREMENT METHOD:

The procurement method used was NMSA 1978, Section 13-1-135, Coop

The existing contract number 2024-25-C115-ALL expires on 05/21/2028.

Chief Procurement Officer (CPO)/Designee: _____ **Date:** 01/06/2026

CPO Comment/Exceptions: _____

ASSOCIATED APPROVALS:

IT Components included? ☐ **Yes** | ☒ **No**

Approval: NA **Title:** _____ **Date:** _____

Comment/Exceptions: _____

Treasury/Point of Sale Components included? ☐ **Yes** | ☐ **No**

Approval: NA **Title:** _____ **Date:** _____

Comment/Exceptions: _____

Vehicles included? ☒ **Yes** | ☐ **No**

Approval: Daniel Garcia Daniel Garcia (Jan 6, 2026 11:39:15 MST) **Title:** Fire Fleet Manager **Date:** 12/12/2025

Comment/Exceptions: _____

Construction to City Facilities, Furniture, and/or Fixtures included? ☐ **Yes** | ☒ **No**

Approval: NA **Title:** _____ **Date:** _____

Comment/Exceptions: _____

Is this an externally funded purchase? ☒ **Yes** | ☐ **No**

If yes, what is the issuing agency: _____

Approval: ERIKA LUJAN ERIKA LUJAN (Jan 12, 2026 08:40:53 MST) **Title:** Grant Manager **Date:** 01/12/2026

Comment/Exceptions: _____

Is this a Capital Asset or Project? ☒ **Yes** | ☐ **No**

Project Ledger Number: FIR2622112

Approval: Rebecca Lovato-Sanouvong **Title:** Accounting Manager **Date:** 01/12/2026

Comment/Exceptions: _____

ATTACHMENTS:

Horizons declination
Apparatus Approval 12.9.25 SFFD
Vendor's Quote
Procurement document: Coop Master Agreement #2024-25-C115-All
Fully Executed 25-J3150 SFFD Purchase & Eqpt a fire engine Sta. 3
Certificate of Liability Insurance (COI)

Los Ranchos_2024 License 411 Equipment LLC
411 Equipment W-9 10_02_2025

Services Offered to the City of Santa Fe (FY26)

Approved:
These services have been approved by the New Mexico Council for Purchasing from Persons with Disabilities and are available through Horizons of New Mexico.

- ADA Accessibility Consulting Services
- Auctioneering Services
- Bulk Mailing and Sorting
- Call Center Services
- Computer Refurbishing
- Courier Services
- Decontamination, Sanitation and Sterilization Services
- Debris Removal
- Document Imaging
- Document Shredding
- Envelope Stuffing
- General Labor
- Hard Drive Destruction
- Janitorial and Housekeeping Services – Including Carpet Cleaning & Floor Care
- Landscape Irrigation
- Landscaping
- Mailing Services
- Management of an Assistive Technology Reuse and Recycling Program
- Medical Waste Disposal
- Meeting Minute Preparation Services
- Pest Control and Extermination Services
- Printing Services
- Rest Area Maintenance
- Screen Printing
- Snow Removal
- Temporary Staffing Services
- Yard, Grounds, and Lawn Maintenance

Permissive:
The services have been approved by the New Mexico Council for Purchasing from Persons with Disabilities as permissible for sale under the State Use Act through Horizons of New Mexico. While the Council recognizes that certain Horizons of New Mexico members are capable of performing the services listed below, said services are considered permissive and excluded from the mandatory aspect of the State Use Program. Any procurement of the below services through Horizons of New Mexico is at the discretion of the purchasing agent and will be considered by the Council on a case-by-case basis.

- Graphic Design
- Graphic Design - Logo Design
- IT – Enterprise Application
- IT – IV & V
- IT Network and Database Management
- IT Support
- IT Security Services
- IT – Web Design
- IT – Web Programmer
- Marketing
- Social Media Marketing

For the complete State Use service list, please go to: http://horizonsofnewmexico.org/services.html

Michelle Lujan Grisham
Governor

Major General Miguel Aguilar
Cabinet Secretary

Regina Chacon
Deputy Cabinet Secretary

Ali Rye
State Director

Randy Varela
State Fire Marshal

DEPARTMENT OF HOMELAND SECURITY
AND EMERGENCY MANAGEMENT

11/4/2025

Brian Moya, Fire Chief
Santa Fe Fire Department

Chief Moya ,

The specifications you submitted dated December 4, 2025, for the purchase of a Class A pumper have been reviewed and are approved. The Santa Fe Fire Department is authorized to use fire protection fund monies for the purchase of the said apparatus.

Please be advised that the apparatus **SHALL** comply with **NFPA 1900 Standards for Aircraft Rescue and Firefighting Vehicles, Automotive Fire Apparatus, Wildland Fire Apparatus, and Automotive Ambulances 2024 Edition. Any exceptions made to NFPA requirements will not be approved.**

This letter shall serve as approval to expend fire protection fund monies to finance the cost of Tender. The Santa Fe Fire Department is currently an ISO rating of 2 with a minimum yearly Fire Protection Fund Allocation of *$722,554.00*

If there are any changes in the specifications, or waivers presented at any time during the process, this office must approve the changes. If prior approval and authorization is not obtained from this office, the expenditure shall be rendered null and void.

If you anticipate a loan, I recommend that you contact the New Mexico Finance Authority {NMFA} at 505-984-1454 to finance the Class A Pumper. A loan through NMFA will be at minimal interest. This letter shall serve as authorization for you to enter into an agreement with NMFA for the commitment of fire protection fund monies.

For future references, please be reminded that all purchases shall be accomplished in accordance with the policies and guidelines of your governing body, the provisions of

the Public Purchase Act, and as approved by the New Mexico Department of Finance and Administration.

If you have any questions, please do not hesitate to contact me.

Sincerely,

Steven Gonzales, Captain

Fire Support Coordinator
NM State Fire Marshal's Office

CC: Derrick Rodriguez, Battalion Chief

P.O. Box 27111 • Santa Fe • New Mexico • 87502
Office: 505-476-9600 • Fax: 505-476-9650

411 Equipment, LLC
"Be in the Know"
7324 4th Street NW, Los Ranchos, NM 87107
(505) 242-1411 Phone

December 1, 2025

City of Santa Fe
Fire Department
Brian Moya
Fire Chief

I am pleased to offer your department a 2025 Ferrara Custom Cinder Pumper with shelving for $980,043.00 via my CES Contract #2024-25-C115-ALL Code: CES-13
The price breaks down as follows:

Item	Description	Price
CES-13	Custom Cinder, 4-Door, 1500 GPM	$963,298.00
517	Add Foam System, Foam Pro 2001	$24,909.00
	Sub Total	$988,207.00
	CES 2% Discount	($19,764.00)
	Sub Total Less Discount	$968,443.00
	Extra Discount (1.9%)	($18,400.00)
	Subtotal Less Extra Discount	$950,043.00
411 Equipment	Shelving	$30,000.00
	Grand Total	**$980,043.00**

The total includes the CES 2% Discount with an additional 1.9% totaling 3.9% discount. The price of this unit includes graphics, delivery and training. This is for the truck and shelving only. All NFPA Complaint equipment can be quoted separately. 411 Equipment will be responsible for paying the CES fee. This unit is subject to prior sale. This quote is valid for 60 days.

If you have any questions, please don't hesitate to call.

Thank you for this opportunity,

Alexis Marquez

Alexis Marquez
411 Equipment
Sales Manager
505-242-1411

Shop Order

411 Fire Equipment, LLC
H7195 Cinder Pumper Retail

F.O.B. Holden, LA

Sales Rep:
411 Fire Equipment, LLC
Pete Marquez, Jr.

Terms:
Standard Ferrara

Drawing #: Approval (Build)
Est. Delivery Date: / /
Customer PO #: 2022-1013-1
Customer #: H7194
QPF #: N/A
Special Notes: Final Productioin Release

Penalty:
N/A

Exp. Date: 10/26/2022 **Create Date:** 09/26/2022 **Rev. Date:** 05/09/2025
Quote No: 411CinderPumpers-0007
Job/Order No: H7195

PUMPER:	FMP-35-100	Custom Pumper - Extruded / Modular
LEGALS:	FFA-00-300	Legals - Pumpers
CHASS-CUSM:	FCH-30-100	CHASSIS - Ferrara Custom Tilt Cab
CHASS-MODS:	FCM-10-300	Chassis Modifications - Custom
PUMP-ENC:	FPE-20-100	Pump Enclosure - Side Mount
BODY:	FBP-33-200	Body - Extruded Pumper (500-1250 Gallons)
BODY-CMNT:	FBC-30-100	Body Components - Pumpers
ELE-CMPNT:	FEC-30-200	Elec. Components - Pumper Custom
PAINT:	FPC-10-200	Paint - SM Extruded
WRNTY-MNLS:	FWM-50-100	Warranty / Manuals - Pumpers Custom
EQUIPMENT:	FEP-30-100	Loose Equipment Pkg. - Pumper

PART NO	S	DESCRIPTION	QTY	ID
		== Legals - Pumpers - 622.001 06/06/22 ==		***FE***
00-06-0420		Payment Terms: Ferrara Standard	1	FE
00-12-0220		Single Source Manufacturer	1	FE
00-12-0420		Manufacturer - Virtual	1	FE
00-12-0620	**<**	***Principal Dimensions***	***1***	***FE***
		The apparatus shall have the following dimensions:		
		Overall Length: ~31' 11-1/8" (NOT TO EXCEED 32')		
		Overall Height: ~9' 6" (NOT TO EXCEED 9' 8")		

PART NO	S		DESCRIPTION	QTY	ID
			Wheelbase: ~188" (NOT TO EXCEED 188")		
			Cab to Axle: ~126" (NOT TO EXCEED 126")		
00-12-0820			Certified Welders	1	FE
00-14-0620			Drawings - Approval	1	FE
00-18-1020			Vehicle Transportation - Fire Department Supplied	1	FE
00-18-1820			Delivery Time: Calendar Days	1	FE
00-18-2020			Vehicle Familiarization & Demonstration	1	FE
00-22-0220			***Service Contacts***	***1***	***FE***
00-22-0620			***Company Service Vehicles***	***1***	***FE***
00-22-0820			***Replacement Parts***	***1***	***FE***
			== CHASSIS - Ferrara Custom Tilt Cab - 622.001 06/06/22 ==		***FE***
00-D2-0420			***Custom XD Full Tilt Cab - Cinder***	***1***	***FE***
			WHEELBASE / FRAMERAILS / COMPONENTS / ACCESSORIES		**FE**
02-A2-0220	***S***		***Wheelbase: 188"***	***1***	***FE***
02-A4-0420			***Frame Rails - Double***	***1***	***FE***
02-A4-2020			Paint - Frame Rail, Gloss Black	1	FE
02-A6-1420			***Tow Hooks - Chrome, Below the Bumper***	***1***	***FE***
			FRONT BUMPERS / COMPONENTS / ACCESSORIES		**FE**
02-B2-0420			Front Bumper - 12" High, Polished Stainless Steel w/Steel Backing Plate	1	FE
02-B2-2220			Front Bumper Feature Position	1	FE
02-C4-2220			***Front Bumper Extension - 24"***	***1***	***FE***
02-D2-0220			Gravelshield - Front Bumper Extension	1	FE
02-D4-0620			***Compartment - Front Bumper, Center***	***1***	***FE***
02-E6-1220			***Cover - Flat Aluminum T/P w/Cut Out, Center Compartment***	***1***	***FE***
02-M2-4020		<	***Mechanical Siren - Federal Q2B, Pedestal Mount***	***1***	***FE***
			The siren will be mounted on the extended front bumper gravelshield on the driver's side.		
			The siren brake switch will be located in the center dash panel per the dash panel layout.		
02-M8-0220			***Siren Wiring - Active in Response Mode Only***	***1***	***FE***
02-M8-0620	***XS***		***Switch - Siren, Driver's Side Floor***	***1***	***FE***
02-M8-1020	***S***	<	***Switches - Siren, Officer Overhead***	***1***	***FE***
			There a officer's side Q2B activation switch will be located in the officer's overhead dash panels per the dash panel layout.		
02-M8-1420		<	***Additional Siren Brake Switch - Q2B Siren***	***1***	***FE***
			An additional mechanical siren brake switch will be installed in the officer's overhead dash panel per the dash panel layout.		
02-P2-0220		<	Air Horn - Driver's Side Thru Bumper, Hadley Round E-Tone	1	FE
			The air horn will be located on the driver's side of the front bumper in position P6.		
02-P2-0420		<	Air Horn - Passenger's Side Thru Bumper, Hadley Round E-Tone	1	FE
			The air horn will be located on the passenger's side of the front bumper in		

PART NO	S	DESCRIPTION	QTY	ID
		position P2.		
02-P6-0220		Switch - Air Horn, Driver's Side Floor	1	FE
02-P8-0420		Air Horn Wiring - Active All Modes	1	FE
02-R4-0420	**<**	***Siren Speaker - Cast Product SA2401***	***1***	***FE***
		The speaker will be located on the passenger's side of the front bumper in position P1.		
		FRONT AXLES / COMPONENTS / ACCESSORIES		**FE**
04-A2-0420		Front Axle - 20,000 Pounds, Hendrickson Steertek	1	FE
04-A6-0820		Steering System - Sheppard, 18,000 to 24,000 Pounds	1	FE
04-A8-0220		Chassis Alignment	1	FE
04-B2-0420		Front Suspension - 20,000 Pounds, Hendrickson Steertek	1	FE
04-C2-0220		Front Brakes - S-Cam, 16-1/2" x 6"	1	FE
04-C4-0820		Cramp Angle - 45 Degrees	1	FE
04-D4-0620		Front Tires - Michelin 385/65R 22.5 "L" X Multi HL Z 20,000 Pounds	1	FE
04-E2-2420		***Front Wheels - 22-1/2" x 12-1/4", Alcoa Aluminum***	***1***	***FE***
04-E4-0220		***Wheel Trim - Front, Baby Moons / Lug Nut Covers***	***1***	***FE***
04-E4-2020		Mud Flaps - Front	1	FE
		SINGLE REAR AXLES / COMPONENTS / ACCESSORIES		**FE**
04-G2-0420		Rear Axle - 27,000 Pounds, Meritor RS-25-160	1	FE
04-K2-8020		Rear Suspension - 27,000 Pounds, Spring	1	FE
04-M2-0220		Standard Differential - Single Axle	1	FE
04-M6-0820		Vehicle Top Speed: 65-68 MPH	1	FE
04-P2-0220		Rear Brakes - S-Cam 16-1/2" x 7"	1	FE
04-R4-0620		Rear Tires - Michelin 12R22.5 "H" XZE 27,000 Pounds	1	FE
04-S2-2020		***Rear Wheels - 22-1/2" x 8-1/4", Alcoa Aluminum***	***1***	***FE***
04-S2-6020		***Wheel Trim - Rear, High Hat Covers / Lug Nut Covers***	***1***	***FE***
04-S6-1220		Tire Pressure Monitor (Single Rear Axles) - LED Alert	1	FE
		AIR BRAKE SYSTEM / COMPONENTS		**FE**
06-A2-0220		Harness and Hose Routing System	1	FE
06-A2-0420		Air Brake System - Color Coded Nylon w/1/4 Turn Drain Valves	1	FE
06-A2-4020		Chassis Air System Fittings - Push-Lock Type	1	FE
06-A2-6020		***Air Compressor - Wabco 18.7 CFM***	***1***	***FE***
06-A4-4020	>	ABS/ATC/ESC System - SINGLE AXLE	1	FE
06-B4-2020		Air Dryer - Bendix AD-9	1	FE
		ENGINES / COMPONENTS / ACCESSORIES		**FE**
08-A2-0620	***S***	***Engine - 450 HP, Cummins L9 (MY2022)***	***1***	***FE***
08-B2-0620		Engine Brake - Cummins L Series Engines	1	FE
		ENGINE / COMPONENTS / COOLING SYSTEM - L SERIES ENGINES		**FE**
08-C2-0420		Cooling System - 1400 Square Inch Radiator	1	FE
08-C2-1420		Cooling System Fan - Cummins L Series Engines	1	FE
08-C2-2620		Radiator Coolant - Extended Life	1	FE
08-C2-4220		Coolant Hoses - Premium Rubber	1	FE
08-C2-4420		Coolant Hose Clamps - Gates PowerGrip	1	FE
08-C2-6020		***Auxiliary Engine Cooler***	***1***	***FE***
		ENGINE / COMPONENTS / CHARGING SYSTEMS		**FE**

PART NO	S		DESCRIPTION	QTY	ID
08-D2-2220			Alternator - 430 AMP, Delco Remy 55SI	1	FE
08-E2-0420			Battery System (4) - Exide (750 CCA Each)	1	FE
08-E4-0220			Battery Boxes - Stainless Steel	1	FE
08-E4-4220			***Battery Jumper Studs***	***1***	***FE***
08-E4-6220			***Termination Point - Battery Box***	***1***	***FE***
08-E6-0220			Battery Master Load Disconnect	1	FE
08-E8-4420		>	***Battery / Air Charger - Pump Plus 1200, Kussmaul 52-21-1100***	***1***	***FE***
08-G4-2020		>	***Receptacle - 20 AMP, Kussmaul Super Auto-Eject 091-55-20-120***	***1***	***FE***
08-G4-4020			***Receptacle Location - Driver's Side Cab Wheel Well Area***	***1***	***FE***
08-G6-0230			***Cover - Super Auto Eject Yellow, Kussmaul 091-55-234-YW w/Bar Graph Display***	***1***	***FE***
08-G8-8220			***Plate - Shore Power Inlet***	***1***	***FE***
			TRANSMISSION / COMPONENTS / ACCESSORIES		***FE***
10-A2-0220		>	***Transmission - Allison 3000 EVS***	***1***	***FE***
10-A4-0620			***Transmission Push Button Shifter - 5 Speed***	***1***	***FE***
10-H2-0220			***Drive line - 1710 Series***	***1***	***FE***
10-H4-1820			***Fire Pump Installation***	***1***	***FE***
			FUEL SYSTEM / COMPONENTS - L SERIES ENGINES		**FE**
10-J2-0620			***Fuel Tank - 65 Gallon***	***1***	***FE***
10-J4-0220			Fuel Lines - Reinforced Wire Braided	1	FE
10-J4-2020			Fuel Water Separator - Primary Filter	1	FE
10-J4-2620			Fuel Filter - Secondary Filter	1	FE
10-J6-0820			***DEF System w/5 Gallon Tank - Left Rear Under Cab***	***1***	***FE***
10-J8-2020			***DEF Fill w/Door - Left Crew Cab Extension***	***1***	***FE***
10-M2-0820			Exhaust System - EPA 2022	1	FE
			CAB CONFIGURATIONS - CINDER XD - SMFD thru LFD		**FE**
12-C2-0220			Custom Cab - Ferrara Extreme Duty	1	FE
12-C4-2220		>	Custom Cab - Ferrara XD 96 XMFD	1	FE
12-C6-0820			Cab Roof - 8" Raised	1	FE
12-P2-1020	***S***		***Cab Doors - Barrier, 4 Door Raised Roof Cab***	***1***	***FE***
12-P4-0220	***S***		***Cab Door Hinges - Consealed***	***1***	***FE***
12-P6-0820			Cab Door Locks - Manual Paddle Type (4 Door Cab)	1	FE
12-P8-1020			Window Regulators - Electric (4 Door Cab)	1	FE
12-R2-1800			***DELETE FIXED WINDOW - LEFT SIDE***	***1***	***FE***
12-R2-2000			***DELETE FIXED WINDOW - RIGHT SIDE***	***1***	***FE***
12-R4-0420			Cab Tilt Lock Suspension (Full Tilt Cab)	1	FE
12-R4-2020			Cab Tilt Electric Pump	1	FE
			CUSTOM CAB - EXTERIOR TRIM COMPONENTS		**FE**
14-A2-0420			Front Grille - Stainless Steel	1	FE
14-A2-1620			Front Grille Logo - Ferrara/NON-Lighted	1	FE
14-A2-6220			Side Grille w/Ember Separator - Notched Right Side	1	FE
14-A4-0620			Cab Mirrors - Heated/Remote, Velvac Stainless Steel	1	FE
14-A6-0220			Exterior Trim - Cab Handrails, Knurled Stainless Steel	1	FE
14-A6-1620			Fenderettes - Polished Stainless Steel	1	FE
14-A6-2020			Exterior Trim - Rear Step Well w/Removable Battery Access Covers	1	FE
14-A6-8220			Exterior Trim - Tread Plate, Back of Cab	1	FE
14-A8-0220			Exterior Trim - Tread Plate, Cab Roof	1	FE

PART NO	S		DESCRIPTION	QTY	ID
			CUSTOM CAB - INTERIOR TRIM COMPONENTS		**FE**
14-G2-1020			Corrosion Protection/Sound Deadening - "F-Shield"	1	FE
14-G4-0220			Interior Cab Finish - "F-Shield" Dark Gray	1	FE
14-G4-2220			Interior Trim - Gray Floor Mats/Engine Tunnel Covering	1	FE
14-G4-6420			Interior Trim - Sprayed Aluminum, Rear Wall	1	FE
14-G6-0420			Interior Trim - Grab Handles (4 Door Cab)	1	FE
14-G6-4020			Interior Trim - Officer's Dash, Glove Box	1	FE
14-G6-6020			Interior Trim - Sun Visors (3)	1	FE
14-H2-0820			Interior Trim - Upper Door Panels "F-Shield" (4 Door Cab)	1	FE
14-H4-1220			Interior Trim - Lower Door Panels Reflective Stop Sign (4 Door Cab)	1	FE
14-H4-2220			***Interior Trim - Mounting Plate, Engine Tunnel***	***1***	***FE***
			CUSTOM CAB - INSTRUMENTS AND CONTROLS		**FE**
14-K2-0420			Cab Instrumentation & Controls - Standard Gauges	1	FE
14-K2-0620			Driver's Information Display Panel	1	FE
14-K2-0810			***Electrical System - Chassis, E2020***	***1***	***FE***
14-K2-2020			***Doghouse Mounted Switch Panel - Ferrara XD Aluminum***	***1***	***FE***
14-K4-4020			Steering Column w/Self Canceling Turn Signals - Douglas	1	FE
14-P2-1620			Heat/Air Conditioning - Under Dash and Rear Crew Area (L Series Engines)	1	FE
14-P2-2420			A/C Condenser Housings: Black	1	FE
			CUSTOM CAB / SEATING / AIR BAG PROTECTION / EMS COMPARTMENTS		***FE***
16-A2-1220			***Seating / EMS Compartments - Bostrom***	***1***	***FE***
16-A8-0420			***Seat Material - Bostrom Durawear***	***1***	***FE***
16-A8-1220			***Seat Color - Gray/Black***	***1***	***FE***
16-A8-4020			***Seat Belts - Standard 3-Point NON ABTS***	***1***	***FE***
16-A8-6020			***No SCBA Bracket Required***	***1***	***FE***
16-A8-8020			***No Filler Panels Required***	***1***	***FE***
16-B4-0220			***Seat - Driver, Bostrom Sierra Air-100 RX***	***1***	***FE***
16-B4-1440			***Seat - Officer Bostrom Sierra Air-100 NON SCBA***	***1***	***FE***
16-E2-0220	***XS***		***Seat (1) - IB Forward Facing Crew, Bostrom Sierra HBFX Fixed / Non SCBA***	***1***	***FE***
16-G2-0620	***XS***	***<***	***Seats (2) - OB Forward Facing Crew, Bostrom Sierra HBFX Fixed / NON SCBA / Flip***	***1***	***FE***
			The seat will be equipped with the Bostrom Fold & Hold option.		
16-H2-0220			***Compartment - Outboard Rear Facing EMS, Driver's Side***	***1***	***FE***
16-H2-0820			***Door - Driver's Side EMS Compartment, Interior Cargo Net***	***1***	***FE***
16-H4-0620			***Light - Driver's Side EMS Compartment, LED Strip***	***1***	***FE***
16-H6-0220			***Shelf - Adjustable, Driver's Side EMS Compartment***	***1***	***FE***
16-H8-6220		***>***	***Outlet - Driver's Side EMS Compartment, 12V Power***	***1***	***FE***
16-J2-0220			***Compartment - Outboard Rear Facing EMS, Officer's Side***	***1***	***FE***
16-J2-0820			***Door - Officer's Side EMS Compartment, Interior Cargo Net***	***1***	***FE***
16-J4-0620			***Light - Officer's Side EMS Compartment, LED Strip***	***1***	***FE***
16-J6-0220			***Shelf - Adjustable, Officer's Side EMS Compartment***	***1***	***FE***
16-J8-0420		***>***	***Outlet - Officer's Side EMS Compartment, 12V Power***	***1***	***FE***
			CUSTOM CAB - ACCESSORIES		**FE**
16-M2-0620		***<***	***Accessory Panel - Blue Sea 4365***	***1***	***FE***
			The fuse black will be located on the side of the engine tunnel behind the officer's seat.		

PART NO	S	DESCRIPTION	QTY	ID
16-M2-2220	**<**	***Radio - WB/AM/FM/BT w/Speakers, Jensen JHD62B***	***1***	***FE***
		The radio will be located in the overhead panels per the dash layouts.		
16-M2-6020		Accessory Power & Ground Stud	1	FE
16-M4-2420		Electronic Siren - Whelen 295SLSA1	1	FE
16-M6-0620		Electric Horn - Single	1	FE
16-M6-2020		Back Up Alarm - NFPA Compliant	1	FE
		CUSTOM CAB - INTERIOR LIGHTING		**FE**
16-P2-0220		Lights (4) - LED Cab Dome, 6" Red/Clear Whelen 60CREGCS	1	FE
16-P2-2420		Light - Open Door w/Alarm, Whelen TIR3 LED	1	FE
16-P4-0220		Lights (6) - Step Well, LED	1	FE
16-R4-0420		Lights (2) - Engine Maintenance, LED	1	FE
		CUSTOM CAB - EXTERIOR ILLUMINATION		**FE**
18-A2-0220		Front Cab Lighting - Whelen 600 Series LED	1	FE
18-A4-0830		Headlights - LED, FireTech FT-4X6-4KIT	1	FE
18-A6-0420		Lights (2) - Turn Signal, Whelen 600 Series LED (Headlight Module Mounted)	1	FE
18-A6-1220		Lights (2) - Turn Signal/Marker, Whelen 400 Series LED	1	FE
18-A6-6020		Lights (2) - Cornering, LED	1	FE
18-A6-6420		***NO FRONT CAB FACE DOT LIGHTS REQUIRED***	***1***	***FE***
18-B4-0420		Lights (2) - Inboard Lower Front Warning, Whelen 60R02FRR LED (Red)	1	FE
18-D2-0820		Lights (4) - LED Cab Ground, Whelen 20C0CDCD	1	FE
		AUDIO / VISUAL COMMUNICATION SYSTEMS		**FE**
18-M2-0420		***Camera/Video System - Fire Research inView360 SNB100-C00***	***1***	***FE***
18-M2-0620	**<**	***Monitor - 7" Color, Fire Research SNB1option-MH0***	***1***	***FE***
		The monitor will be located in the left front cab corner.		
		== Chassis Modifications - Custom - 622.001 06/06/22 ==		***FE***
		NFPA SAFETY SIGNS		**FE**
18-P2-0220		Safety Signs - General Requirements	1	FE
18-P2-0420		Safety Signs - Battery Explosion, FAMA01	1	FE
18-P2-0620		Safety Signs - Rotating Shafts, FAMA02	1	FE
18-P2-0820		Safety Signs - Hot Surfaces, FAMA03	1	FE
18-P2-1020		Safety Sign - Hot Exhaust, FAMA04	1	FE
18-P2-1220		Safety Sign - Spinning Fan, FAMA05	1	FE
18-P2-1420		Safety Signs - Seated & Belted, FAMA07	1	FE
18-P2-1620		Safety Sign - Air Conditioning Refrigerant, FAMA09	1	FE
18-P2-1820		Safety Sign - Cab Equipment Mounting, FAMA10	1	FE
18-P2-2020		Safety Sign - Fire Service Tire Rating, FAMA12	1	FE
18-P2-2220		Safety Sign - Electronic Stability Control, FAMA13	1	FE
18-P2-2420		Safety Sign - Cab Seating, FEMA14	1	FE
18-P2-2620		Safety Signs - Helmet Worn in Cab, FAMA15	1	FE
18-P2-2820		Safety Sign - Vehicle Backing, FAMA17	1	FE
18-P2-4020		Safety Signs - Intake/Discharge Cap Pressure, FAMA18	1	FE
18-P2-4220		Safety Signs - Hose Restraint Required, FAMA22	1	FE
18-P2-4420		Safety Signs - Climbing Method Instruction, FAMA23	1	FE
18-P2-4620		Safety Signs - Riding on Exterior, FAMA24	1	FE

PART NO	S	DESCRIPTION	QTY	ID
18-P2-4820		Safety Sign - Pump Training, FAMA25	1	FE
18-P2-6020		Safety Signs - No-Step, FAMA26	1	FE
18-P2-6220		Safety Sign - Siren Noise, FAMA42	1	FE
18-P4-1020		Safety Sign - Apparatus Movement Warning	1	FE
18-P6-0220		Plate - Fluid Capacity	1	FE
18-P6-0420		Plate - Overall Height / Length / Weight	1	FE
		== Pump Enclosure - Side Mount - 622.001 06/06/22 ==		***FE***
20-A2-0220		Pump Module - Side Mounted Extruded / Modular	1	FE
20-A4-2220		Separate Pump Module - Extruded / Modular	1	FE
20-A4-4020		Trim - Dunnage Area, Tread Plate	1	FE
20-C4-0220		Pump Panels - Black Anodized Aluminum	1	FE
20-C6-1020		***Pump Panel - Fully Hinged, Right Side***	***1***	***FE***
20-D6-0220		Light - Left Side Pump Panel, LED Strip	1	FE
20-D6-1220		Light - Right Side Pump Panel, LED Strip	1	FE
20-D8-0620		Light - Pump Compartment, LED	1	FE
20-F4-0420		***Running Boards - Aluminum Tread Plate, Left & Right Side***	***1***	***FE***
20-J2-0220		***Gauges - Master Suction/Pressure, 4-1/2" Metal Face***	***1***	***FE***
20-J4-1620	<	***Pressure Governor - FRC Pump Boss PBA400-A00***	***1***	***FE***
		Production to located the pressure governor do that it does not get kicked when climbing the front compartment face steps.		
20-J4-4020		***Return Line - Fill Subsurface***	***1***	***FE***
20-J6-0220		Gauges - 2-1/2" Pressure, White Face	1	FE
20-J6-6020		Gauge Bezels - Chrome	1	FE
20-M4-0220		Tags - Pump Panel, Color Coded (Metal)	1	FE
		PUMP / COMPONENTS / ACCESSORIES		**FE**
22-A2-0420	>	***Pump System - 1250-2000 GPM Single Stage, Hale QMAX***	***1***	***FE***
22-F2-0220		***Packing Glands - Hale***	***1***	***FE***
22-G2-0220		***Pump Shift - Cab Mounted***	***1***	***FE***
22-J8-6420	>	***Primer - Manual Air, Trident 31.001.2 (1250+ GPM)***	***1***	***FE***
22-P2-0220		***Valve - Master Pump Drain***	***1***	***FE***
22-P2-1220		***Valve - Individual Drain, 3/4" 1/4 Turn***	***1***	***FE***
22-R2-0220		***Pump Test Points - Hale Pumps***	***1***	***FE***
22-R2-2020		***Certification - Pump, 1750 GPM Pump***	***1***	***FE***
22-R4-0420		***Plate - Pump Test Certification***	***1***	***FE***
24-A2-1620		Steamer Inlets - 6" w/Long Handle Cap, Left & Right Side	1	FE
24-J8-0420		Valve - Intake Relief	1	FE
24-R2-0420		Tank-To-Pump - 3" Valve w/Push-Pull Control	1	FE
24-S6-0820	>	Tank Fill - 2" Valve w/Push-Pull Control	1	FE
24-T2-0420		***Cooler - Engine, 1/2" Line w/ 1/4 Turn Valve***	***1***	***FE***
24-T2-0620		Cooler - Pump, 3/8" Line w/ 1/4 Turn Valve (1/2")	1	FE
24-W2-0220		***Plumbing - Stainless Steel***	***1***	***FE***
24-W2-0620		***Plumbing - Stainless Steel Foam Manifold***	***1***	***FE***
24-W4-0220		***Plumbing Finish - Natural***	***1***	***FE***
26-A2-0220		***Apparatus Valves - Akron Brass 8800 Series***	***1***	***FE***
26-D2-0420		Suction - Left Side, 2-1/2" Valve w/Swing Control at Valve	1	FE
28-00-0100		DISCHARGE OUTLETS - SIDE MOUNT	1	FE

PART NO	S		DESCRIPTION	QTY	ID
28-00-0220			All 2-1/2" Side Discharge Outlets Terminate 30-Degree Elbows	1	FE
28-A2-0220			***Discharge - Front Bumper w/ Swivel - thru Tread Plate (DS)***	***1***	***FE***
28-A8-0220			***Discharge - Front Bumper, 2" Valve w/Push Pull Control***	***1***	***FE***
28-A8-6020			***Discharge - Swivel Stop, Tread plate***	***1***	***FE***
28-D4-0420			Crosslays (2) - Double Lay, 2" Valve w/Push Pull Control	1	FE
28-D8-0820			Cover - Hypalon w/End Flaps, Crosslays	1	FE
28-D8-2220			***End Flaps - Hypalon w/Snaps, Crosslays***	***1***	***FE***
28-D8-6020			***Cover/End Flaps Color: Red***	***1***	***FE***
28-H8-0420			Discharges (2) - Left Side, 2-1/2" Valve w/Push-Pull Control	1	FE
28-K4-0420			Discharges (2) - Right Side, 2-1/2" Valve w/Push-Pull Control	1	FE
28-K4-6220		>	***Discharge - Right Side, 4" Valve w/Handwheel Control***	***1***	***FE***
28-Q2-0220			Discharge - Deck Gun, 3" Valve w/Push Pull Control	1	FE
28-V2-1020			Discharge - Left Rear, 2-1/2" Valve w/Push-Pull Control	1	FE
28-V8-8020			***Elbow - 2-1/2 FNST x 2-1/2" MNST Chrome 30 Degree, Trident 01.010.0***	***1***	***FE***
28-W2-1020			***Discharge - Right Rear, 2-1/2" Valve w/Push-Pull Control***	***1***	***FE***
28-W8-8020			***Elbow - 2-1/2 FNST x 2-1/2" MNST Chrome 30 Degree, Trident 01.010.0***	***1***	***FE***
30-C2-0620			***Foam System - Foam Pro 2001***	***1***	***FE***
30-J2-2020			***Gauge - Class A Foam, FRC Tank Vision Pro WLA360-A00***	***1***	***FE***
30-K2-1220			***Tank Switch (1) Low Level***	***1***	***FE***
30-M4-0620			***Flowmeter - Tee Mount w/Coupling Kit***	***1***	***FE***
30-R2-0620			***Placard - Operating System, Single Tank***	***1***	***FE***
30-R8-0220			***NFPA Test - Foam Proportioning Systems***	***1***	***FE***
30-S2-0620		>	***Foam Tank No. 1 - Polypropylene, 30 Gallons***	***1***	***FE***
30-T2-0200			***FOAM OUTLET LOCATIONS:***	***1***	***FE***
30-T2-0420			***Foam Outlet - Discharge Front Bumper***	***1***	***FE***
30-T2-0620			***Foam Outlet - Crosslay No. 1***	***1***	***FE***
30-T2-0820			***Foam Outlet - Crosslay No. 2***	***1***	***FE***
30-T6-2220			***Foam Outlet - Discharge Rear of Body, Right Side***	***1***	***FE***
			== Body - Extruded Pumper (500-1250 Gallons) - 622.001 06/06/22 ==		***FE***
			WATER TANKS / COMPONENTS / ACCESSORIES		**FE**
32-A2-2820			***Water Tank - Polypropylene, 750 Gallons***	***1***	***FE***
32-A6-0220		>	***Special Tank Configuration - "L" Shaped***	***1***	***FE***
32-D8-0420			***Certification - NFPA Water Tank Size***	***1***	***FE***
34-A2-1220			***Gauge - Water Level, Tank Vision Pro WLA300-A00***	***1***	***FE***
52-A2-0220			Body - 96" Wide, Extruded Aluminum	1	FE
52-A6-4020			Body Sub Frame - Extruded Aluminum	1	FE
52-A6-6020			Body/Compartment Construction - 96" Wide Body	1	FE
52-A6-8020			Compartment Tops/Catwalk - Standard	1	FE
52-A8-0220	***S***		***Wheel Well Panels & Fenders - Body, Painted Aluminum***	***1***	***FE***
52-A8-0620			Fenderettes - Polished Stainless Steel	1	FE
52-A8-1020			Hose Bed - 67-1/2" Wide	1	FE
52-D6-4220	***S***	<	***Compartments- Left Side, Rescue Style (36/58/44 w/64" Interior Height)***	***1***	***FE***
			L1		
			There shall be one-(1) left front compartment installed ahead of the rear axle. The interior dimensions will be approximately 36" wide x 73" high x 25" deep.		
			L2		

PART NO	S		DESCRIPTION	QTY	ID
			There shall be one-(1) compartment installed above the wheel well. The interior dimensions will be approximately 58" wide x 41" high x 25" deep.		
			L3 There shall be one-(1) left rear compartment installed behind the rear axle. The interior dimensions will be approximately 44" wide x 73" high x transverse in the lower section and 25" deep in the upper section.		
52-H4-6220		<	*Compartments - Right Side, Rescue Style (36/58/44 w/64" Interior Height)* R1 There will be one-(1) right front compartment installed ahead of the rear axle. The interior dimensions will be approximately 36" wide x 73" high x 25" deep in the lower section and 12" deep in the upper section.	*1*	*FE*
			R2 There will be one-(1) compartment installed above the wheel well. The interior dimensions will be approximately 58" wide x 41" high x 12" deep.		
			R3 There will be one-(1) right rear compartment installed behind the rear axle. The interior dimensions will be approximately 44" wide x 73" high x transverse in the lower section and 12" deep in the upper section.		
52-J8-0420	*S*	<	*Compartment - Center Rear, Standard Height* B1 There shall be one-(1) compartment installed at the center rear of the apparatus. The compartment shall have an interior dimension of approximately 46" wide x 28" high x 31" deep.	*1*	*FE*
56-D8-0220		< >	*Compartment Doors - Hinged, Flush Look* The hinged door will be located on compartment B1.	*1*	*FE*
56-D8-0620		< >	*Compartment Door - Roll Up, Satin Finish* There will be a ROM satin finish roll up door installed on compartment L1, compartment L2, compartment L3, compartment R1, compartment R2 and compartment R3.	*6*	*FE*
58-A0-0420			*Rear Body Construction - Flat Back Design*	*1*	*FE*
60-A2-4820			Vertical Load Test - Body	1	FE
60-A2-8020		<	*Compartment - Full Depth, Per Compartment* The left side compartments will be full depth.	*3*	*FE*
62-A2-4820			*Compartment - Pike Pole/Ladder Storage, Right Side Beside Tank*	*1*	*FE*
62-B2-1220		<	*Tubes (2) - Pike Pole Storage* The tubes will be located in the ladder tunnel.	*1*	*FE*

PART NO	S		DESCRIPTION	QTY	ID
64-B2-0420		>	***Compartment - Wheel Well Double Air Bottle, Left Front (SIG4)***	***1***	***FE***
64-B4-0420		>	***Compartment - Wheel Well Double Air Bottle, Left Rear (SIG4)***	***1***	***FE***
64-B4-6220		>	***Compartment - Wheel Well Double Air Bottle, Right Front (SIG4)***	***1***	***FE***
64-B6-6220		>	***Compartment - Wheel Well Double Air Bottle, Right Rear (SIG4)***	***1***	***FE***
66-A2-0220			Body Trim Package	1	FE
66-A2-0620			Body Trim - Vertical Handrails (2), Knurled Aluminum	1	FE
66-A2-1220		<	***Body Trim - Rear Stanchions***	***1***	***FE***
			The stanchions will be lowered so that the top of the warning beacons are even with the hose bed sides.		
66-A2-2420			Fuel Fill - Recessed w/Door, Left Side	1	FE
66-A2-4420			Mud Flaps - Rear	1	FE
66-A2-4620			Rub Rail - Extruded Aluminum	1	FE
66-A4-1040			***Step - 12" Rear, Aluminum Tread Plate***	***1***	***FE***
66-A4-4420		<	***Step - Chrome Folding, Front of Body***	***2***	***FE***
			There will be one-(1) step located on each side of the apparatus on the front compartment faces.		
66-A4-6220			***Step - Chrome Folding, Rear of Body***	***3***	***FE***
66-A4-8820			Tow Eyes (2) - Rear, Below Body	1	FE
66-A6-2220			Handrail - Below Hose Bed, Knurled Aluminum	1	FE
66-A6-6420		<	***Handrail - Front of Body, 12" Knurled Aluminum***	***2***	***FE***
			The steps will be mounted at final inspection.		
66-A8-1620			***Divider - Hose Bed, Pumper***	***2***	***FE***
66-A8-4220	***S***		***Cover / End Flap - Hose Bed, Cargo Netting***	***1***	***FE***
66-A8-8220			***Cover/End Flap Color: Black***	***1***	***FE***
66-A8-8820		<	***Hose Bed Capacity***	***1***	***FE***
			The hose bed shall have the capacity to hold the following (left to right):		
			600' of 1-3/4" Double Jacket Fire Hose		
			1500' of 5" Large Diameter Supply Hose		
			600' of 2-1/2" Double Jacket Fire Hose		
			A safety sign FAMA22, which warns of the need to secure hose, shall be visible to personnel at the hose storage area.		
			== Body Components - Pumpers - 622.001 06/06/22 ==		***FE***
			== Elec. Components - Pumper Custom - 622.001 06/06/22 ==		***FE***
			******* ELECTRICAL / COMPONENTS / ACCESSORIES *******		**FE**
70-A2-2020			Electrical System - Apparatus Body, E2020	1	FE
70-A2-4020			Electrical System - 12 Volt Testing	1	FE
70-A2-6020			12-Volt Wiring Protection - Split Loom	1	FE
70-A2-8020			EMI/RFI Protection	1	FE
			AUDIBLE WARNING DEVICES		**FE**
			INTERIOR COMPARTMENT LIGHTING		**FE**
70-D4-0220		< >	***Light - LED Compartment, Amdor Luma Bar***	***14***	***FE***
			There will be two-(2) lights installed in each compartment.		

PART NO	S	DESCRIPTION	QTY	ID
70-E2-2220	< >	*Light - LED Compartment, On Scene Solutions Access Series*	*1*	*FE*
		The light will be located on the front inside wall of the hose bed.		
		The light will be wired to the WORK LIGHT switch in the dash panel.		
70-E8-8220	< >	*Guard - Compartment Light, Stainless Steel*	*1*	*FE*
		The guard will be installed over the hose bed light.		
70-H2-0220		Switch - Compartment Door Ajar Indicator	1	FE
72-G8-4820		Zone A Upper Light Bar - 72" LED, Whelen Freedom IV F4N7QLED	1	FE
72-R8-4020	<	*Zone C Upper Lights (2) - Red LED Beacons, Whelen B6LED B6MMRRP*	*1*	*FE*
		There will be one-(1) light located on each side of the apparatus on the the upper stanchions.		
74-C8-0420	< >	*Zone B & D Lower Front (2) - Red TIR6 LED, Whelen 50R03ZRR*	*1*	*FE*
		There will be one-(1) light located on each side of the apparatus on the front bumper ends.		
74-D8-2420	<	*Zone B & D Lower Midship (2) - Red TIR6 LED, Whelen 50R03ZRR*	*1*	*FE*
		There will be one-(1) light located on each side of the apparatus in the body wheel well area.		
74-G8-1020	<	*Zone B & D Lower Rear (2) - Red w/Clear Lens LINZ6 LED, Whelen LINZ6R*	*1*	*FE*
		There will be one-(1) light located on each side of the apparatus below compartments L3 / R3.		
74-H8-1020	<	*Zone C Lower Lights (2) - Red 600 LED, Whelen 60R02FRR*	*1*	*FE*
		There will be one-(1) light located on each side of the apparatus in the rear tail light housings.		
74-J4-0820		*Stop/Turn/Reverse Lights - LED, Whelen 600*	*1*	*FE*
74-J4-2220		*Housing - Rear Tail Light Assembly, CAST4*	*1*	*FE*
74-J8-1020	<	*Light - LED Rear Directional, Whelen TAL65*	*1*	*FE*
		The control head will be located on top of the driver's dash panel per the dash layouts.		
74-J9-0220		*Rear Directional Light Mounting - Surface Mount*	*1*	*FE*
		12-VOLT APPARATUS LIGHTING / ACCESSORIES		**FE**
74-L0-2220		Lights - LED Clearance and Maker	1	FE
74-L2-0820	<	*Light - 20" LED Underbody, Luma Bar H20 AY-9500-020*	*5*	*FE*
		There will be one-(1) light located below left pump panel running board, compartment L3, compartment R1, compartment R3 and front bumper.		
74-L2-1020	<	*Light - 40" LED Underbody, Luma Bar H20 AY-9500-040*	*1*	*FE*
		The light will be centered below the rear step.		
74-L2-4020		Light - LED License, Whelen OAOCEDCR	1	FE

PART NO	S	DESCRIPTION	QTY	ID
74-L4-4020	<	*Fuse Block - 12-Volt 6-Place, Blue Sea 5025*	*2*	*FE*
		There will be a fuse block located on the upper front side wall of compartment L3 and compartment R3.		
74-P2-1020	< >	*Lights (2) - 600 LED Scene, Whelen 6SC0ENZR*	*1*	*FE*
		There will be one-(1) light installed on each side of the apparatus on the upper rear of the unit.		
		The lights will be controlled by a switch in the driver's overhead dash panel per the dash layouts.		
74-P2-1420	< >	*Lights (2) - 900 LED Scene, Whelen 9SC0ENZR*	*1*	*FE*
		There will be one-(1) light located on each side of the apparatus directly behind the cab front doors in the raised roof section.		
		The lights will be controlled by a switches in the driver's overhead dash panel per the dash layouts.		
74-P4-0220	< >	*Switch - Additional, Scene Light Activation*	*6*	*FE*
		The additional switches will be located in the overhead panels per the dash layouts.		
		The additional switches will control the following:		
		LEFT FRONT TELE-LIGHT		
		RIGHT FRONT TELE-LIGHT		
		FRONT SCENE		
		LEFT SCENE		
		RIGHT SCENE		
		REAR SCENE		
74-P4-6420		*Upper Rear Scene Light Activation - Reverse Circuit*	*1*	*FE*
74-Q8-9425	>	*Light - 12 Volt 75" LED Brow w/DOT Lights, FireTech FT-B-72-ML-W (White Housing)*	*1*	*FE*
74-S2-0420		*Telescoping Light Locations - Back of Cab*	*1*	*FE*
74-S2-1220		*Light - 12 Volt 80 Watt LED Telescoping, Whelen Pioneer Plus PFH1*	*2*	*FE*
74-S8-0220		*Switch - Telescoping Light Activation, Light Head*	*2*	*FE*
		== Paint - SM Extruded - 622.001 06/06/22 ==		*FE*
80-C2-0220		Paint - Body/Cab	1	FE
80-C2-0420	>	Paint Color/Code: Red FBCH 992103 (FFA Red 1)	1	FE
80-D2-1220		Interior Compartment Finish - Natural	1	FE
80-E2-2020		*NFPA Striping - Customer / Dealer Supplied*	*1*	*FE*
80-E8-0220		Striping - Rear Body, Reflective Chevron	1	FE
80-E8-0620		Chevron Striping Colors: 3M Red & Lime Green	1	FE
80-E8-4020		Reflective Material - Designated Walking Surfaces	1	FE
		== Warranty / Manuals - Pumpers Custom - 622.001 06/06/22 ==		*FE*
98-A2-0420		Warranty - Body Material & Workmanship, 2-Year / 36,000 Miles	1	FE

PART NO	S		DESCRIPTION	QTY	ID
98-A2-1020			Warranty - Custom Chassis Material & Workmanship, 2-Year / 36,000 Miles	1	FE
98-A4-0210			Warranty - Cab Structural, 10-Year / 100,000 Miles (Aluminum)	1	FE
98-A4-0420			Warranty - Body Structure, 10-Year / 100,000 Miles (Aluminum)	1	FE
98-A6-0210			Warranty - Cab Paint / Perforation, 10 Year	1	FE
98-A6-0220			Warranty - Body Paint / Perforation, 10 Year	1	FE
98-A8-0220			Warranty - Frame Assembly Structure, 20-Year / 100,000 Mile	1	FE
98-A8-0420			Warranty - Meritor Axle, 2-Year/Unlimited Miles	1	FE
98-A8-4220			Warranty - Cummins Engine, 5-Year/100,000 Miles	1	FE
98-A8-4420			Warranty - Allison Automatic Transmission, 5-Year/Unlimited Miles	1	FE
98-A8-4620			Warranty - Anti Lock Brake System, 3-Year/300,000 Miles	1	FE
98-A8-6020			Warranty - Hale Pumps	1	FE
98-A8-8020			Warranty - Plumbing System, 10-Year / 100,000 Miles	1	FE
98-A8-8420			Warranty - Poly Water Tank, Lifetime	1	FE
98-B2-0220			Manuals (2) - Chassis Operation, Digital	1	FE
98-B2-1220			Manuals (2) - Engine/Transmission Operations	1	FE
98-B2-1820			Manuals - Apparatus Body & Components	1	FE
98-B2-2020			Manuals - Pump	1	FE
98-B2-2220			Safety Guide - FAMA	1	FE
98-B2-6020			Wiring Diagrams - Cab/Chassis, Standard	1	FE
98-B2-6620			Wiring Diagrams - Apparatus Body, Standard	1	FE
			== Loose Equipment Pkg. - Pumper - 622.001 06/06/22 ==		***FE***
90-A2-0220		***<***	***Equipment Package - NFPA 1901 2016, Fire Department Supplied***	***1***	***FE***
			The loose equipment as outlined in NFPA 1901, 2016 edition, section 5.9 thru 5.9.4 shall be provided by the fire department unless it is listed in this proposal. All loose equipment shall be installed on the apparatus before placed in emergency service, unless the Fire Department authorized agent signs the State of Exception as listed in the NFPA 1901 Standard for Automotive Fire Apparatus sections 4.21 thru 4.21.2.		
90-C2-0420			Ladder - 10' Folding Attic, Alco-Lite FL-10	1	FE
90-C6-0420			Ladder - 14' Roof, Alco-Lite PRL-14	1	FE
90-D6-1020			Ladder - 24' 2-Section Extension, Alco-Lite PEL-24	1	FE
92-C4-2620	***U***	***<***	***Elbow - 4" FNST RL x 5" Storz 30 Degree***	***1***	
			The elbow will be located on the 4" right side discharge.		
92-F4-0820	***U***	***<***	***Cap w/Chain - 5" Storz***	***1***	
			The cap will be located on the 4" right side discharge elbow.		
96-C2-0220			***Wheel Chocs (2) - Folding, Ziamatic SAC-44-E***	***1***	***FE***
96-C2-0420		***<***	***Holders (2) - Wheel Chocs, Ziamatic SQCH-44-H***	***1***	***FE***
			The holders will be located below compartment L1.		

H7195 Cinder Pumper Retail

== Legals - Pumpers - 622.001 06/06/22 ==

PAYMENT TERMS

Full payment shall be made upon delivery and acceptance of the apparatus. The vehicle(s) shall not be released to the BUYER until payment is made. If the selling price is subject to any taxes, the taxes added will be that which are prevailing at the time of delivery.

Payment shall be made directly to Contractor. Payment shall be made in United States Currency. No checks or any other form of payment shall be made to any sales representatives, dealer, agents, etc.

If these payment terms are not strictly adhered to, Contractor shall assess a daily interest charge based on an annual percentage rate of 18% on the unpaid balance. If more than one vehicle is covered by this contract and the vehicles are shipped on different dates, the terms stated above shall apply to each vehicle.

SINGLE SOURCE MANUFACTURER

To provide the customer with a single point of contact for service, warranty, and parts, proposals shall only be accepted from manufacturers who assemble the complete apparatus in their own facility.

VIRTUAL MANUFACTURING

The manufacturer shall have a web site available for the customers to watch their unit being produced.
The "Trucks in Production" photos shall be updated as progress has been made to the unit.

The web site shall also include documentation of cab and body crash tests, take a virtual tour of the production facility, videos of both current and new innovative products, updates on trade shows, photos of new deliveries and the opportunity to include customer 'Action Photo's.

Customer shall be able to access the web site without the requirement of a password.

PRINCIPAL DIMENSIONS

The apparatus shall have the following dimensions:

Overall Length: ~31' 11-1/8" (NOT TO EXCEED 32')
Overall Height: ~9' 6" (NOT TO EXCEED 9' 8")
Wheelbase: ~188" (NOT TO EXCEED 188")
Cab to Axle: ~126" (NOT TO EXCEED 126")

CERTIFIED WELDERS

The manufacturer shall employ individuals that are certified aluminum and stainless steel welders. The welders shall be certified by an outside testing laboratory. The certifications shall be available for viewing through the Human Resources office upon request.

DRAWING, APPROVAL

H7195 Cinder Pumper Retail

Prior to construction, the contractor shall provide three-(3) approval drawings of the apparatus for the fire department's review. The drawings shall show such items as the chassis being utilized, lights, horns, sirens, pump panels, and all compartment locations and dimensions. The blueprint shall be a visual interpretation of the unit as it is to be constructed, In the event of discrepancies on the print the specifications shall prevail. The buying authority shall sign all drawings. One-(1) print shall be retained by the Fire Department, the dealer/sales representative shall retain one-(1) print, and one-(1) print shall be returned to the manufacturer.

TRANSPORTATION

To insure proper break-in of all components while still under warranty, the apparatus shall be delivered over the road under its own power (Rail and/or truck freight shall not be acceptable).

The Fire Department shall be responsible for driving the completed apparatus back to the station.

DELIVERY TIME

The apparatus shall be delivered within One (1) calendar days after receipt of the approved signed off pre construction changes.

The manufacturer shall not be held liable for changes arising from its failure to make or delay in making delivery because of fire, flood, strike, riot, chassis shortage, accidents, acts of God, or any circumstances beyond our control.

VEHICLE FAMILIARIZATION & DEMONSTRATION

Familiarization and demonstration of the vehicle shall be by a competent and qualified person as defined in the current standard of NFPA 1901 standard.

Familiarization of the vehicle shall include the following:

How to locate gauges or indicators and check all fluid levels and operational issues of the vehicle

How to tilt the chassis cab or hood assembly for access to the engine, fire pump, or aerial control, or any other device to allow access to fluids or for required maintenance

Interior cab controls, instruments, mirrors, safety devices or alarms, brake operations, transmission control, pump controls, exhaust regeneration (if provided), seat adjustments, warning light engagement, and other operational equipment

If the apparatus is provided with a fire pump system, the following minimum instructions:

a) Setting of parking brake, proper transmission gear, and fire pump engagement operations
b) Throttle control
c) Primer and tank-to-pump operation
d) Use of pressure control devices
e) Tank refilling operations
f) Proper operation of discharge controls
g) Proper shutdown and draining of system

If the apparatus is provided with a generator, the following minimum instructions

a) Proper engagement if driven by the chassis
b) Startup, operation, and shutdown of generator
c) Monitoring of controls and instruments

If the apparatus is provided with a foam system, the following minimum instructions:

a) Startup, operation, and shutdown of foam system
b) Setting of foam percentages and other operational settings
c) Proper flushing and draining of the system

If the apparatus is provided with a water tower or aerial device, the following minimum instructions:

a) Positioning and locating the vehicle for safe operations
b) Chassis parking brakes and engagement of hydraulic system
c) Deployment of stabilization devices and use of ground pads
d) Operation of elevation, extension, and rotation of the aerial device
e) Operation of waterway, nozzle, and other firefighting devices of aerial device
f) Operation and use of breathing air system (if provided)
g) Specific aerial device maintenance and service areas for operators
h) Shutdown and return to service operations
i) Operation of tip controls and platform controls
j) General familiarization and demonstration of aerial device
k) Review of all safety devices, interlocks, and operational Hazards

MANUFACTURER SERVICE CONTACTS

The manufacturer must have a 24 hour/ 7 day a week, toll-free emergency hot line. The manufacturer must be capable of providing both in-house and on-site service for the apparatus. The service technicians shall be EVT certified in compliance with NFPA 1071 classifications F2 through F6. On-site service and maintenance shall be the primary function, to eliminate the vehicle having to leave the fire department jurisdiction. Copies of the certifications shall be made available through the Human Resources office.

SERVICE VEHICLES

The manufacturer shall have a minimum of 10 full time, company owned, service vehicles. The vehicles shall be available 24 hours a day, seven days a week to respond to customer needs. The Service Vehicles shall be operated by full time EVT Certified Technicians.

REPLACEMENT PARTS

Replacement parts shall be available directly from the manufacturer, as well as the dealer and or service centers.

== CHASSIS - Ferrara Custom Tilt Cab - 622.001 06/06/22 ==

CUSTOM CHASSIS

It is the intent of the technical specifications contained herein to ensure the custom cab and chassis specified shall be engineered, designed, and manufactured exclusively for heavy-duty continuous use in extreme environments and rigorous adverse conditions.

H7195 Cinder Pumper Retail

Each custom cab and chassis shall be manufactured in strict compliance with all applicable requirements as set forth in the current edition of the NFPA (National Fire Protection Association) pamphlet 1901 with maximum safety as the key focus throughout the design and development phase of each fire and rescue chassis.

CHASSIS WHEELBASE

The chassis wheelbase shall be 188" inches.

CHASSIS FRAME RAILS, DOUBLE

The chassis frame rails shall be constructed of 110,000-PSI minimum yield steel that has been formed into a "C" channel shape with dimension of 10.50" x 3.50" x .375 inches.

An inner frame liner of 110,000 Pound minimum yield with dimension of 9.69" x 3.13" x .313" shall be provided for additional strength and to reduce deflection. The frame liner shall run from centerline of front axle to rear of the main frame rail. This liner shall be mitered at 45 degrees at the front axle.

The resulting frame system shall have a minimum section modulus of 28.50 cubic inches with a resisting bending moment of 3,135,498-inch pounds per rail.

The frame rails shall be powder coated in order to insure superior paint adhesion. Frame cutouts for the engine shall be made with a plasma torch in order to minimize the heat-affected zone caused by the cut.

The left and right side frame systems shall be fastened together using cross members and Grade 8 fasteners.

PAINT, FRAME RAIL

The frame and running gear shall be painted gloss enamel black. The running gear shall consist of the axles, drive lines, air tanks, steering gear, frame mounted brackets, drag link, and fuel tank.

The air system piping and electrical harnesses shall not be installed until after the paint has cured. This shall insure complete coverage behind those items as well as that air piping and wiring harnesses are not.

TOW HOOKS, FRONT

Two-(2) chrome plated tow hooks will be mounted to the bottom of the front bumper frame extension rails. The tow hooks will be attached with Grade 8 bolts.

FRONT BUMPER

There shall be a 12” high, two rib front bumper constructed of highly polished, 10 gauge stainless steel. The bumper shall be a full wrap around type extending across the entire width of the cab. The return portion of the wrap around shall make up the majority of the bumper extension, measuring up to 24” in length.

There shall be a structural steel backing plate to reinforce the stainless steel bumper. This backing plate shall match the contour of the stainless steel bumper and shall be fabricated from 1/4" steel C-channel. The backing plate shall be attached to the chassis frame rails with Grade 8 bolts.

FRONT BUMPER POSITIONS

FRONT BUMPER EXTENSION

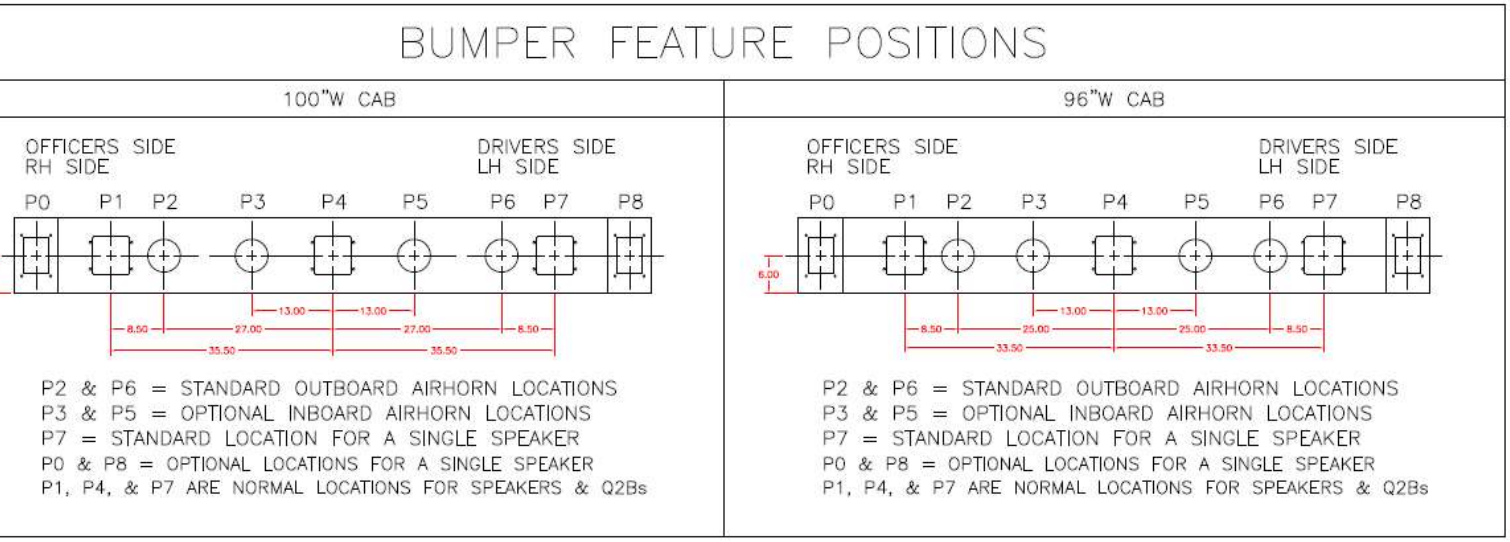

There shall be twenty-four inch (24”) frame extension provided. The extension shall be made from heavy-duty steel in both C-channel and tubular shapes. The frame rail extension material shall measure 7” high x 3-1/2” wide x .375” wall thickness.

The extension rails shall be bolted to the chassis frame rails through reinforcement plates, backed by the engine mounting cross member. Fasteners utilized shall be Grade 8 bolts.

GRAVELSHIELD

A gravelshield constructed of 1/8" (.125") embossed aluminum tread plate shall be installed above the frame extension between the bumper and the front face of the cab.

BUMPER COMPARTMENT, CENTER

There shall be a compartment provided in the front bumper gravelshield, centered between the frame rails fabricated of 1/8" (.125) smooth aluminum plate with drain holes to allow drainage.

A safety sign FAMA22, which warns of the need to secure hose, shall be visible to personnel at the hose storage area.

COVER, CENTER FRONT BUMPER COMPARTMENT

The center bumper compartment will have a hinged aluminum tread plate cover to secure the contents. The cover will be secured in the closed position with a latch mechanism.

The cover will have a cut-out to allow the hose to be pre-connected.

MECHANICAL SIREN

One (1) Federal Signal Q2B siren model #Q2B-012PSD electro-mechanical siren shall be mounted on the extended front bumper gravelshield. The Q2B siren shall be a streamlined, chrome plated siren designed to provide reliable and long-life operation. The electro-mechanical siren shall produce the distinctive Q2B sound that is a registered trademark of Federal Signal, and shall be provided with a heavy duty clutch and an electric brake.

H7195 Cinder Pumper Retail

The siren will be mounted on the extended front bumper gravelshield on the driver's side.

The siren brake switch will be located in the center dash panel per the dash panel layout.

SIREN WIRING

The siren activation switch shall be wired thru the chassis park brake and operate in the "Response Mode" only.

SIREN FOOT SWITCH

A foot operated switch will be installed on the driver's side wired to the mechanical siren.

Switches - Siren, Officer Overhead

There a officer's side Q2B activation switch will be located in the officer's overhead dash panels per the dash panel layout.

SWITCH, ADDITIONAL SIREN BRAKE

An additional mechanical siren brake switch will be installed in the officer's overhead dash panel per the dash panel layout.

AIR HORN, DRIVER'S SIDE

There will be one-(1) Hadley E-Tone air horn installed in compliance with NFPA thru the driver's side front bumper outboard of the frame rails. The air horn will be plumbed to the chassis air supply system thru an air protection valve. The air horn shall be trumpet style with a chrome finish on the exterior and a painted finish deep inside the trumpet.

The air horn will be located on the driver's side of the front bumper in position P6.

AIR HORN, PASSENGER'S SIDE

There will be one-(1) Hadley E-Tone air horn installed in compliance with NFPA thru the passenger's side front bumper outboard of the frame rails. The air horn will be plumbed to the chassis air supply system thru an air protection valve. The air horn shall be trumpet style with a chrome finish on the exterior and a painted finish deep inside the trumpet.

The air horn will be located on the passenger's side of the front bumper in position P2.

AIR HORN FOOT SWITCH

A foot operated switch will be installed on the driver's side wired to the air horn(s).

AIR HORN WIRING

The air horns shall be active in both the "Scene" and "Response Mode".

SIREN SPEAKER(S)

{Quantity} Cast Products model SA2401 100-watt speaker(s) will be provided wired to the electronic siren.

The speaker will be located on the passenger's side of the front bumper in position P1.

FRONT AXLE

The front axle shall be a Hendrickson Steertek fabricated box beam axle with an 20,000-pound rating. The axle shall be equipped with removable kingpins & oil seals with transparent covers for oil level inspection.

STEERING SYSTEM

The vehicle shall be equipped with a Sheppard M110 power steering gear, used in conjunction with a M90 power assist gear. The steering assembly shall be rated to statically steer up to a maximum front axle load of up to 23,500-pounds. Relief stops shall be provided to reduce system pressure upon full wheel cut. The system shall operate mechanically should the hydraulic system fail.

CHASSIS ALIGNMENT

The chassis frame rails shall be measured to insure the length is correct and cross checked to make sure they run parallel and are square to each other. The front and rear axles shall be laser aligned. The front tires and wheels shall be aligned and toe-in set on the front tires by the chassis manufacturer. Cramp angle is set to achieve the greatest turning radius possible with the selected components of the vehicle. Each front wheel is set to zero degrees. The wheel is then turned until it reaches the steering stops. This measurement is the cramp angle.

FRONT SUSPENSION

The front suspension shall be parabolic (taper leaf) spring type, with three-(3) leaves with an 20,000-pound serving rating. The leaves shall be a minimum of 4" wide x 56.4" long (flat), with grease fittings for lubrication installed in the spring pins. Axle stops with energy absorbing bumpers shall be attached to the chassis frame. Two-(2) ZF Sachs twin-tube shocks shall be provided with the front suspension assembly. The shocks shall feature multi-stage piston and base valves.

FRONT BRAKES

The front axle shall be equipped with 16-1/2" x 6" S-Cam air operated brakes and automatic slack adjusters.

CRAMP ANGLE

The cramp angle of the front axle shall be 45 degrees.

FRONT TIRES

The front tires shall be Michelin 385/65R22.5 Load Range "L" X Multi HL Z all-weather treads.

The Intermittent Fire Service load capacity shall be 20,000 pound with a speed rating of 75 miles per hour when properly inflated to 120 pounds per square inch with steel or aluminum wheels.

The Michelin Intermittent Fire Service Rating limits the operation of the emergency vehicle to one-(1) hour of loaded travel with a one-(1) hour cool down prior to another loaded run.

WHEELS, FRONT ALUMINUM

The front wheels shall be Alcoa hub piloted, 22-1/2" x 12-1/4" aluminum wheels featuring a mirror polish on the outer face. The hub piloted mounting system shall provide easy installation and shall include two-piece flange nuts.

WHEEL TRIM, FRONT WHEELS

The front wheels will be provided with nut covers and baby moon hub caps.

MUD FLAPS, FRONT

The front axle mud flaps shall be constructed from hard black rubber and installed behind the tires.

REAR AXLE

The rear axle shall be a Meritor RS-25-160 with a 27,000-pound service rating. The axle shall be equipped with oil seals.

REAR SUSPENSION

The rear axle suspension shall leaf spring type rated at 27,000 pounds capacity. The main spring pack shall have fourteen (14) leaves with a four (4) leaf auxiliary pack. The suspension shall be a torque leaf, variable rate, self-leveling slipper type.

DIFFERENTIAL, REAR AXLE

The rear axle shall have a standard differential from the axle manufacturer.

VEHICLE TOP SPEED

The rear axle shall be geared for a top speed of 65-68 MPH at governed engine speed.

REAR BRAKES

The rear axle shall be equipped with 16-1/2" x 7" S-Cam air operated brakes with automatic slack adjusters.

REAR TIRES

The rear tires shall be Michelin 12R22.5 Load Range "H" XZE highway threads.

The load capacity shall be 27,000 pound with a speed rating of 75 miles per hour when properly inflated to 120 pounds per square inch with steel or aluminum wheels.

WHEELS, REAR ALUMINUM

The outer rear wheels shall be Alcoa hub piloted, 22-1/2" x 8-1/4" aluminum wheels with a mirror polished outer surface. The inner rear wheels shall be Alcoa hub piloted, 22-1/2" x 8-1/4" aluminum wheels with bright machine finish. The hub piloted mounting system shall provide easy installation and shall include two-piece flange nuts.

WHEEL TRIM, REAR WHEELS

The rear wheels will be provided with nut covers and high hat hub covers.

TIRE PRESSURE MONITORING SYSTEM

Each tire installed on the apparatus shall be equipped with a tire pressure monitoring device. The device shall consist of a valve stem cap to with an LED tire alert to indicate tire pressure conditions. The LED shall flash when the tire drops 8 psi below the factory setting.

HOSE AND HARNESS ROUTING

Battery cables, hydraulic hoses and air lines shall be routed through the vertical face of the chassis frame rails using bulkhead connectors. The use of grommets through frame rails, as well as running hoses or cables under, over or ahead of the chassis frame rails to achieve positive connections shall not be acceptable.

For ease of maintenance, the wiring harnesses, hydraulic hoses and air hoses shall be divided down each frame rail. The hydraulic and air hoses shall be run, primarily, down the inside of the right side frame rail, while the electrical harnesses shall be run, primarily, down the left side frame rail. Harnesses and hoses shall be mounted using rubber coated, stainless steel holders and, where necessary, heat resistant zip loom.

AIR BRAKE SYSTEM

The air brake system shall meet the requirements of FMVSS-121. The system shall consist of three-(3) reservoirs with a total capacity of 5100 cubic inches. The system shall be of dual circuit and quick build up design powered by an engine mounted gear driven air compressor. The system shall be protected by a heated air dryer with heated automatic moisture ejector on the wet tank and quarter turn brass drain valves on the other tanks.

The entire chassis air system shall be plumbed utilizing reinforced nylon air lines in conformance to SAE J 844-94, Type B and USDOT standards. All of the airlines shall be color coded to correspond with an air system schematic and shall be adequately protected from heat and chafing.

Color coding shall be as follows:
Blue: Supply Lines
Green: Primary Lines
Red: Secondary Lines
Orange: Park Brake Lines
Yellow: Accessory Lines
Purple: Pump Shift - Supply Line
White: Pump Shift / Road Mode Line
Black: Pump Shift / Pump Mode Line

The compressor discharge shall be plumbed with stainless steel braided hose lines with a Teflon lining.
The system shall be plumbed using color-coded nylon airlines with brass push-lock fittings.

COMPRESSOR

Air compressor shall be a Wabco brand, minimum of 18.7 cubic feet per minute capacity. Air brake system shall be the quick build up type. The air compressor discharge line shall be stainless steel braid reinforced Teflon hose.

A pressure protection valve shall be installed to prevent the use of air horns or other air operated devices should the air system pressure drop below 80 psi (552 kPa).

The chassis air system shall meet NFPA 1901 latest edition for rapid air pressure build-up within sixty-(60) seconds from a completely discharged air system. This system shall provide sufficient air pressure so that the apparatus has no brake drag and is able to stop under the intended operating conditions following the sixty-(60) seconds build-up time.

ANTI-LOCK BRAKES W/ATC & ELECTRONIC STABILITY CONTROL

The apparatus shall have a Wabco ABS-based Electronic Stability Control (ESC), which offers another level of vehicle control. This automatic braking management system reduces the possibility of a side rollover and assists in the directional stability of apparatus. Upon reaching critical lateral acceleration thresholds, the system intervenes to regulate the vehicles deceleration and braking functions. Reducing the engine's RPM by overriding the foot throttle input and applying the engine retarder (if equipped) to slow the apparatus giving the driver added control and maneuverability. The ESC shall also apply braking power to selective wheel of the front and rear axles to assist in stabilizing the apparatus to its intended direction. This selective braking application and reduction of speed and torque reduces the possibility of spinouts and side rollovers even in adverse conditions.

The system includes a Wabco 4-channel Anti-Lock Braking System shall be installed which includes four-(4) wheel sensors and four-(4) modulators to control and compensate braking force at each wheel. This system shall monitor all wheel ends regardless of suspension type, and which axle it sees braking forces first.

An ABS warning light shall be installed on the driver's dash that remains illuminated until the vehicle is moving at least four-(4) miles per hour. An ABS test switch shall be installed in the "Diagnostic Information Panel" that when pressed, sends the system into diagnostic mode causing the ABS light to blink (I/O) indicating a flash code. A listing of flash code definitions is listed in the Wabco Owner's Manual.

Automatic Traction Control (ATC) shall be installed to sense wheel slip, apply air pressure to brakes, and reduce engine torque to provide improved traction. An ATC indicator light shall illuminate when the system is active.

A mud and snow switch shall be provided. When the switch is in the "ON" position, it shall allow momentary wheel slip to obtain traction under extreme mud and snow conditions.

The system also includes a Steering Angle Sensor (SAS), which informs the system of the degree in which the steering is turned to one side or the other. Along with the SAS, an ESC module is mounted mid frame at the rear of the chassis cab to detect roll, pitch, and yaw angles and computes which wheel(s) brake(s) shall be acted upon.

NOTE:
The following restriction apply to the ESC system:
160" - 176" wheel base range with 1500-gallon maximum water on non-aerial units.
177" - 304" wheel base range with 2200-gallon maximum water on non-aerial units.
177" - 304" wheel base range with 2200-gallon maximum water on aerial units.

If the proposed unit does not fall in these parameters then it will have to be tilt table tested.

AIR DRYER

The air system shall include a Bendix AD-9 air dryer with integral 12-volt heated moisture ejector. The air dryer shall have a desiccant cartridge and incorporate an integral turbo cutoff valve. The turbo cutoff allows the air dryer to purge water and contaminants without any loss of turbo boost or engine horsepower.

H7195 Cinder Pumper Retail

ENGINE

The vehicle shall be equipped with a model year 2022 Cummins L9 450 horsepower turbo charged diesel engine.

ENGINE COMPRESSION BRAKE

The engine shall come equipped with a Jacobs “C-Brake” compression brake controlled by two-(2) switches located in the cab, an on/off and low/medium/high. The compression brake shall interface with the anti-lock brake controller to prevent engine brake operation during adverse braking conditions.

A pump shift, interlock circuit shall be provided to prevent the engine brake from activating during pumping operation.

ENGINE COOLING SYSTEM

The engine cooling system shall have the capacity to cool the engine according to the engine manufacture’s requirements.

RADIATOR

The engine radiator shall be of a bolted design and have a minimum core area of 1400 square inches. The top and bottom tanks shall be stamped 16-gauge steel. The tanks shall be attached to the header assemblies with a minimum of fifty-(50), 5/16" bolts. The spacing between fasteners shall not exceed 2.00 inches in order to minimize the possibility of leaks.

The header plates shall be made of 16-gauge brass while the tubes shall be .0068-inch thick brass and .076 by .625 inches in size. The tubes shall have a smooth bore with welded seems which allows for cleaning of the radiator.

The radiator shall contain three rows of tubes with a minimum of 87 tubes per row for a total of not less than 261 tubes. The tubes shall be arranged in an inline profile across the core. Louvered serpentine fins constructed of copper with a density not greater than 16 fins per inch shall be used in the construction of the radiator.

The radiator tubes shall be attached to the header plates with a dual bonding process. The coolant side connection shall be welded, while the air side shall be soldered.

The top tank shall include an integral de-aeration tank, which removes air from the engine water. A low coolant warning shall be incorporated to alert the driver.

The bottom tank of the radiator shall incorporate an oil to water plate-type cooler for the transmission. The cooler is designed to cause a turbulent flow of the transmission oil through the core to force heat transfer. The cooler shall be sufficient to cool Allison Transmission without output retarders.

A high efficiency fan shall be direct driven by the engine and surrounded by a fan shroud. The sweep of the fan shall not exceed the width of the radiator core.

CHARGE AIR COOLER

The charge air cooler shall be constructed of aluminum with cast, aluminum side tanks. The cooler shall have a frontal core area of not less than 888 square inches.

The exterior fins shall be louvered serpentine design constructed of .006-inch thick aluminum and have a density no greater than seven-(7) fins per inch. The internal fins shall be designed to create air turbulence in order to increase heat transfer efficiency.

The charge air cooler shall be mounted directly ahead of the radiator and to the radiator headers. Rubber isolators shall be used at the mounting points to reduce transmission of vibrations.

The piping between the charge air cooler and engine shall use four-(4) ply silicone woven Nomex hoses with stainless steel bands. The bands are used to maintain the shape of the hose during changing turbo boost pressures. The hoses shall be attached with stainless steel constant tension hose clamps.

COOLING SYSTEM FAN

The engine cooling system shall incorporate a thermostatically controlled fan clutch. When the fan clutch is disengaged, the vehicle shall have improved vehicle performance, cab heating in cold climates, and fuel economy.

The fan shall automatically lock-up when the vehicle is placed in pumping mode.

A shroud and recirculation shields system shall be used to ensure that once air has passed through the radiator, the same air is not drawn through again.

RADIATOR COOLANT, LONG LIFE

The coolant system shall contain a mixture to keep the coolant from freezing to a temperature of -34 degrees F.

The coolant supplied shall be Long Life Coolant compatible with the engine manufacturer's requirement.

COOLANT HOSES

The entire chassis cooling system shall have premium rubber hoses.

COOLANT HOSE CLAMPS

Gates PowerGrip clamps shall be provided for all coolant and heater hoses. The maintenance-free clamps retain dynamic tension and never need re tightening. These clamps stop leaks, even on out-of-round applications. The clamps are made from a heat sensitive thermoplastic with memory to prevent over or under tightening. The clamps shall have a temperature range of -40 degrees F to -302 degrees F.

AUXILIARY ENGINE COOLER

The cooling system shall have a tube and bundle engine cooler mounted in the upper radiator water pipe. Water from the fire pump shall be circulated through 1/2" tubing to the cooler. A valve located on the pump panel shall control the cooling circuit.

ALTERNATOR

The alternator shall be a Delco Remy model 55SI 430 amp. The alternator shall be engine driven via a poly-groove power belt with an automatic tensioner. The alternator shall be a brush less design. The alternator shall meet all current applicable NFPA 1901 Edition requirements for performance.

BATTERY SYSTEM

The battery system shall be a single system consisting of four-(4) Exide Group 31, 12-volt DC, heavy-duty, high cycle automotive batteries. The battery bank shall have a group rating of 3000 cold cranking amperes (CCA) and a reserve of 720 minutes at zero degrees Fahrenheit.

All battery wiring shall be welded battery cable capable of handling 125% of the actual load. It shall be run through a heat resistant flexible nylon "HTZL" loom rated at a minimum of 300 degrees Fahrenheit. All cable connections shall be machine crimped and soldered.

BATTERY BOXES

The chassis batteries shall be mounted in welded and bolted stainless steel battery box. The battery hold-downs shall be made of structural, stainless steel angle. Painted carbon steel battery boxes shall not be acceptable.

BATTERY JUMPER STUDS

One-(1) set of battery jumper studs shall be provided on the chassis. The studs shall be connected to the chassis batteries with 1/0 color coded cables, red for the positive cable and black for the negative cable. The studs shall be protected with color coded plastic covers when not being used.

A tag shall be provided for positive/negative terminals.

The battery jumper studs shall terminate at the driver's side battery box.

SWITCH, MASTER BATTERY DISCONNECT

The chassis batteries shall be wired in parallel to a single 12-volt electrical system, controlled through a heavy-duty, Guest brand rotary type, master disconnect switch. The master disconnect switch shall be located within easy access of the driver upon entering or exiting the cab. All electrical circuits shall be disconnected when the switch is in the "OFF" position.

AIR COMPRESSOR/BATTERY CHARGER

A Kussmaul Pump Plus 1200 air compressor and battery charger package Model 091-9-12V-1200 shall be installed. The Auto Pump 12 volt driven air compressor shall ensure that the air brake system is properly pressurized for immediate response of the unit. A pressure switch shall regulate operation and shall automatically sense low air pressure in the brake system and restore the proper pressure. The unit shall have no interference with the vehicle mounted air compressor. The compact compressor shall have sealed bearings and a 15 amp circuit breaker installed in pressure switch assembly. The air compressor power mode selector switch shall select: 1) DC power full time from vehicle battery 2) AC powered only from the battery when vehicle is plugged into shore power and automatically shuts off air compressor when disconnected from shore power.

The air compressor shall have the following ratings:

1) 100 PSI maximum rating
2) Pre-set at 75 PSI “ON” and 95 PSI “OFF”
3) Adjustable differential range of 20 PSI to 100 PSI
4) Output:
   0.30 SCFM @ 80 PSI
   0.35 SCFM @ 60 PSI

5) Rating: 12 volt at 11 amps

The battery charger shall be a Pump Plus 1200 Series 40 amp high output battery charger shall be installed.

The charger shall have the following operational specifications:
a) 120 volts AC input at 10 amps
b) 12 volts DC output at 40 amps

The battery charger shall supply a 'single battery bank' with automatic operation and with an aluminum enclosure. The system shall have a built-in sense circuit to check battery voltage 120 times a second; the system shall compensate for voltage drop in charging wires and provide quick recharging with no over-charging. The unit shall include front panel connections for a remote display and auxiliary loads.

SUPER AUTO-EJECT(S), 20 AMP

one (1) Kussmaul Super Auto-Eject type receptacle(s) model 091-55-20-120, 20 amp 120 volt shore power assembly shall be installed. A solenoid wired to the vehicle starter is energized when the engine is started. This instantaneously drives the plug from the receptacle. The receptacle shall be provided with a weatherproof cover. The cover shall be spring loaded to close, preventing water from entering when the shoreline is not connected. The super auto eject receptacle shall be mounted in a location specified by the department and is designed to accept a 120V AC from a shoreline plug.

The UL maximum allowable amperage draw on receptacles is generally 80% of their listed rating, for example, the 20-amp receptacle should not carry more than 16-amp continuous load. When adding the different amperage draws of the components being installed on the chassis, be sure to figure in whether the components shall draw a continuous load or intermittent load.
The receptacle shall be located in the driver's side cab wheel well area.
The Auto Eject cover(s) shall be a Kussmaul 091-55-234-YW, yellow in color.

The cover shall include a built in easy to see bar graph indicator display for charging status.

SHORE POWER INLET PLATE

A shore-power "Inlet Plate" shall be permanently affixed at or near the power inlet.

The plate shall indicate the following:

- Type of Line Voltage
- Current Rating in Amps
- Power Inlet Type (DC or AC)

TRANSMISSION

The chassis shall be equipped with an Allison 3000 EVS automatic transmission. It shall have 4th gear operating controls and programmed for Fire Apparatus vocation. An electronic oil level indicator shall be provided as well as a diagnostic reader port connection. The transmission shall be geared to provide one-to-one ratio in fourth gear for fire pump applications. This dedicated "lockup" circuit is provided for pump operation. The transmission fifth gear shall be an overdrive ratio, permitting the vehicle to reach its top speed at the governed engine speed.

The transmission shall be equipped with an automatic neutral feature. Applying the parking brake shall command the transmission to neutral, regardless of drive range requested on the shift selector which shall require re-selecting the drive range to shift out of neutral.

The transmission shall be equipped with dual PTO ports with engine speed capabilities. The transmission shall be cooled by the radiator-mounted heat exchanger. The transmission fluid shall meet Allison specification TES-295.

TRANSMISSION SHIFTER, PUSH BUTTON

The transmission shall be controlled by an Allison push button shifter internally illuminated for night operation. The shifter shall be mounted on the dash to the right of the steering column. The transmission shall be capable of five-(5) speed operation.

The transmission shall be equipped with the oil level sensor (OLS); this sensor shall allow the operator to obtain an indication of the fluid level the shift selector. The sensor display shall provide the following checks, correct fluid level, low fluid level and high fluid level.

DRIVELINES

The chassis shall be equipped with Neapco 1710 series drive shaft with full round yokes and universal joints. The drive shaft tubing shall be a minimum of 4.00" diameter with .134" wall thickness. The drive lines shall be balanced at a minimum of 3000 RPM.

FIRE PUMP MOUNTING

Extra heavy-duty mounting brackets shall be bolted to the chassis frame rails for the installation of the fire pump. The mounting brackets shall be positioned aligning the pump insuring the angular velocity of the drive line joints are the same at each end allowing for full capacity performance with minimal vibration.

FUEL TANK

The chassis will be equipped with a 65-gallon rear mounted fuel tank. The tank will be constructed of 12-gauge steel with stainless steel mounting straps and rubber isolators secured to the bottom flange of the chassis frame rails. The tank will be baffled to prevent sloshing, vented, and have a drain plug installed on the bottom. A 240-33 ohm fuel-sending unit will be provided and broadcast across the SAE J1939 data link.

The tank will be certified to meet FMCSR 393.65 and 393.67.

FUEL LINES

The fuel lines shall be wire braid reinforced fuel grade hose. They shall have reusable fittings and be routed along the inside of the frame rails. Fuel lines shall be protected against chaffing by non-conductive, frame mounted standoff fasteners and, where necessary, with heavy-duty plastic zip loom.

FUEL/WATER SEPARATOR, PRIMARY FILTER

The Cummins ISL engine shall be supplied with a primary fuel water separator with a bottom drain valve mounted in the chassis frame. The LMC will display "WATER IN FUEL" and an alarm will sound when the water needs to be drained from the fuel water separator.

FUEL FILTER, SECONDARY

The Cummins engine shall be supplied with a secondary fuel filter mounted to the engine.

UREA STORAGE TANK

There shall be a 5-gallon urea tank located under the extended portion on the cab. A urea level gauge shall be provided in the cab on the main instrument panel.
There shall be a DEF fuel fill assembly mounted in the left crew cab extension. The fill assembly shall have cast aluminum door and fuel fill cap with retention ring. The assembly shall be properly labeled "DIESEL EXHAUST FLUID ONLY".

EXHAUST SYSTEM

The apparatus shall contain a single module devise that houses a particulate filter and SCR (Selective Catalytic Reduction) downstream of the engine's turbo. This single module devise is required to maintain US 2022 Emissions Certification. This filter and SCR device replaces the conventional style filter. The location has been engineered, tested, and set to allow for proper regeneration. Therefore, this filter cannot be removed, altered, or relocated.

A LMC (Lightbar Message Center) shall include lights for this system and shall be located in the cab informing the driver of the systems status. At times a forced regeneration may be required, which would be indicated by a combination of illuminating and/or flashing lights depending on the engine model.

A dual momentary switch labeled "REG. INHIBIT / NORMAL / REG. FORCED" shall be located within reach of the driver's seated position. The momentary REG. FORCED position initiates the forced regeneration if a regeneration is required. The momentary REG. INHIBIT position prevents the vehicle from having the ability to regenerate. Once the inhibit feature has been activated the ignition switch must be cycled off/on to return the vehicle to normal regen. All vehicles equipped with pumping applications shall allow for passive regeneration whenever the system requires and the engine is at its proper parameters unless inhibited by the DPF inhibit switch. In no way shall this feature affect the RPM of the engine being controlled by the pump operator.

The engine exhaust system shall be horizontal in design using stainless steel tubing mounted under the frame rail right side extending forward of the rear wheels.

An exhaust temperature mitigation device shall be installed. The temperature mitigation device shall lower the temperature of the exhaust by combining ambient air with the exhaust gasses at the exhaust outlet.

HEAT SHIELDS EXHAUST SYSTEM

Heat shields shall be provided as needed to prevent damage to body and wiring from excessive exhaust temperatures. The exhaust pipe shall be wrapped in multi-layered insulation blankets, from just aft of the turbo down to inlet side of the DPF. Each blanket shall have a fiberglass inner layer and a silicone impregnated fiberglass cloth outer layer.

All harnesses and cables, in proximity to exhaust system components, shall be protected with insulation.

DPF REGENERATION PROCESS

NFPA 12.2.6.7.1 the regeneration process shall be activated by two methods:

1) Automatically by the engine system but only when the transmission is in gear and the speedometer indicates a speed above 5 mph (8km/hr) whether the apparatus is in motion or is operating in stationary pump mode with an engine rpm sufficient to register 5 mph (8 km/hr) on the speedometer.

2) Manually when initiated by activation of a switch located in the driver's area of the driving compartment.

There shall also be an inhibit switch placed near the driver to inhibit an automatic Regen.

The LMC shall include the following three lights. HIGH EXHAUST TEMP, REGEN INHIBIT and DIESEL PART FILTER.

The dual momentary switch labeled "REG. INHIBIT / NORMAL / REG. FORCED" shall be installed to the right of the steering column, momentary up shall be Regen Inhibit, middle shall be Normal, and momentary down shall be Reg. Forced. The LMC will light up indicating the regeneration is inhibited whenever the Inhibit has been selected.

CUSTOM CAB

The cab shall be custom, fully enclosed, engine forward full tilt cab. The cab shall be an "Open Interior" roll cage design requiring no inner walls or vertical interior supports.

All storage areas inside the cab shall fully comply with NFPA 1901 restraint requirements of 9G’s.

Crash Test

The cab shall exceed the strict and detailed requirements of the Economic Commission for Europe Structural Standard, ECE-29R. The test shall consist of an impact load test and a vertical load test to the cab.

The cab shall have a frontal impact tests via pendulum, with an impact load in excess of 127% of the ECE-29R Standard. The estimated speed of the 3736-lb (1698-kg) pendulum shall be a minimum of 18.2 mph. The cab doors shall be closed during the impact test but be able to open after impact. There shall be no passenger intrusions or any structural component failures. The cab shall meet or exceed all criteria of this portion of the test.

In conjunction with the frontal impact test, a vertical load test shall be implemented to the cab. The cab roof shall be loaded with a minimum of 65,979 lbs. (29.53 metric tons). There shall be no failure to the cab structure or mountings, any passenger compartment intrusion or degradation of occupant survival space, or any other structural failure. The cab shall meet or exceed all criteria of this portion of the test.

A complete photographic, video, data, and dimensional record of these tests shall be available and placed on record for customer evaluations.

Cab Material

The cab shall be constructed entirely of aluminum alloy extrusions and 3/16" (.188) thick, 5052-H32 alloy, marine grade aluminum sheets. The corner posts, door slam posts, roof rails and doorframes shall be made of custom extrusions designed specifically for this cab with slots for inserting the skin. The rear wall and roof shall be reinforced with a grid of rectangular extrusions, which are welded to the overall cab extrusion framework. The front corner caps shall consist of

castings designed specifically for this cab with relief areas cast in place for attachment of roof skin and intersecting structural extrusions. Overlapping formed corner caps are not acceptable.

Cab Face, Double Wall

The cab front shall be of double wall construction resulting in a sealed firewall. The inner and outer shall both be formed from 3/16" thick, 5052 H32 alloy aluminum with structural aluminum reinforcements. This design provides for increased structural integrity, crew safety, and reduced road noise in the passenger area. The outer wall is used for mounting forward lighting, grill and windshield wipers. The inner portion shall be treated with a heavy black undercoating material for corrosion prevention.

Cab Floor

Cab floors shall be constructed from an aluminum extruded frame and 3/16” thick aluminum plate. Floor mats and insulation are detailed later in this specification.

The forward cab floor shall be as large as possible for both the driver and officer. Floorboards shall extend in width from the side of the engine tunnel, all the way to the cab door inner panel. They shall extend forward from the seat riser to the inner portion of the double wall cab face. The officer shall have approximately 28” of foot room.

The entire rear floor of the cab, to reduce trip and fall hazards, shall be a single plane. In applications requiring the use of a top-mounted PTO, a raised area in the floor may be required.

For maximum crew comfort and eliminate leg fatigue during emergency responses, the floor beneath the rear facing jump seats shall be large enough for a seated firefighter to rest both feet side-by-side. Cab floor designs that are wide enough for only one foot shall not be accepted.

Cab Corrosion Protection

A corrosion preventative material shall be applied during cab construction. A ten-(10) year warranty against corrosion perforation shall be provided for the cab.

Wheel Well Liners

Full wheel well liners shall be installed beneath the cab to protect the bottom of the cab from road splash. The liners shall be constructed of aluminum and be full width.

The wheel well liners shall be attached with threaded fasteners and be easily removable for service.

Windshield Wipers, Intermittent

Two-(2) electric "Pantograph" style windshield wipers shall be installed on the front face of the cab. The motors shall operate through a 72-degree sweep and include 24-inch blades to give superior wiper coverage. A washer reservoir of not less than 70 ounces shall be mounted a latched door recessed in the officer's step.

A switch located on the turn signal control arm shall operate the intermittent wipers.

H7195 Cinder Pumper Retail

Cab Interior, Extreme Duty

Cab floors shall be covered with a pebble grain rubber matting with barrier type insulation. Edges of the insulation shall be trimmed with a cast aluminum foot plate for a pleasing appearance.

An insulated covering shall be fitted over the engine tunnel. Made from the same material as the cab floor insulation, this covering shall insulate the cab from engine heat and noise. A Cast Products aluminum door on the engine tunnel shall provided access for fluid checks.

The back side of the engine cover, as well as a 2” to 3” return on the top side, shall be covered with a sprayed aluminum panel and be of sufficient strength to allow for 9G resistant mounting of any optional hand lights, entry tools, or other fire rescue equipment specified by the customer.

The cab shall have a custom built, smooth aluminum plate dashboard, overhead console, glove box, instrumentation panel and switch panel. The front overhead shall include room for the three sun visors and the door open indicator light.

The front door posts shall be trimmed with styled aluminum covers that conceal any wiring, as well as including a mounting area for rubberized grab handles. The center windshield post shall be covered F-Shield paint finish.

Prior to installing the headliner and rear wall padding, minimum R-7 insulation, shall be installed between the interlocking extrusions.

These covers serve to finish the interior, cover wiring harnesses and insulate the interior from sound and heat.

Cab Steps

All cab steps shall be of a stationary, fixed design that use no moving parts and requires no periodic maintenance other than cleaning.

There shall be an open-grip, bright finish step at each cab door opening. The area under the step shall be enclosed to prevent road dirt from entering the cab. There shall be provisions made at the front of the step for easily flushing out any dirt accumulation.

At each door, opening there shall also be an intermediate cab step. Intermediate steps shall be full width of the doorstep area and overlaid with embossed aluminum tread plate.

Cab Step Heights

The distance from level ground to the first cab step shall be 19-21 inches without using swing-down style or under-cab stirrup auxiliary steps.

The distance from first cab step to intermediate step shall be approximately 12-1/2 inches front and rear.

The distance from intermediate step to cab floor shall be approximately 9-1/2 inches in the front and 12 inches in the rear.

H7195 Cinder Pumper Retail

Cab Style

The cab will be a XMFD (extended medium four door) with seating up to eight-(8) seating positions.

Cab Dimensions

The exterior width of the cab will be 96" wide (skin to skin) and 116" wide with standard mirrors. The overall cab length will be 136" with a dimension of 62" from the centerline of the front of the axle to the back of the cab.

Sealed Engine Tunnel

The engine tunnel shall be a structural part of the passenger cab, constructed from welded 3/16" aluminum plate and reinforced with aluminum extrusions. The rear of the engine tunnel shall be no less than 57" inches from the rear wall of the cab, allowing maximum legroom for forward facing passenger. After welding, the seams shall be completely sealed with silicone caulking.

Engine enclosures that are not an integral part of the cab structure are not acceptable.

The interior of the engine tunnel shall be insulated with 1" thick foil backed insulating foam, attached with stud and button method. A cross-section analysis of the insulation shall reveal a 1/8” thick barrier material for additional noise and heat insulation.

The engine tunnel height will not exceed 27-1/2" front to back and side to side. The driver will have no less that 24-1/2" hip room and the officer no less that 23-1/2" of hip room.

Windshield

The standard windshield shall have approximately 4100 square inches of unobstructed viewing area. It shall be a two-(2) piece design with tinted automotive safety glass, with a wraparound design. A .030-inch thick vinyl layer shall separate the laminated glass.

All other cab glass shall be tinted and tempered.

Cab Roof

The cab roof will be raised 8" providing additional headroom above the crew area. The raised portion will start midway over the driver and officer seats.

The cab will offer an interior height of 60" from the front floor to the headliner in the non-raised roof area and a rear floor to headliner height of 66" in the raised roof area.

CAB DOORS

HINGES, CAB DOOR

Each cab door will be attached to the cab with consealed stainless steel hinge with restraining strap.

CAB DOOR LOCKS

There shall be individual manual twist type door locks at each door interior handle. In accordance with FMVSS 206 all exterior door locks shall be keyed alike.

CAB DOOR WINDOWS, ELECTRIC

All cab door windows shall be electrically operated. The driver shall have four-(4) switches located overhead to control the operation of each door. All remaining doors shall contain one-(1) heavy-duty switch to control the window operation located on top of the door panel.

NOTE: On the E2020 electrical system the power windows can't be wired to direct battery power.

DELETE LEFT SIDE FIXED CAB WINDOW

The left sidewall cab window between the front and rear door will be deleted to accommodate an exterior access door for the crew cab EMS compartment or a smooth exterior surface.

DELETE RIGHT SIDE FIXED CAB WINDOW

The right sidewall cab window between the front and rear door will be deleted to accommodate an exterior access door for the crew cab EMS compartment or a smooth exterior surface.

CAB TILT LOCK

The cab shall be supported at four points. At the front, there shall be two center bonded bushings. At the rear, there shall be two hydraulic locking latches.

The cab shall tilt 45 degrees by means of a pair of hydraulic cylinders driven by the electric pump. The tilt system geometry shall be designed in such a way that the maximum hydraulic pressure in the system does not exceed one-half the pressure rating of the cylinders or pump when the cab is empty. This allows the Fire Department to leave some equipment in the cab when maintenance is required (although this equipment must be secured).

Once the cab is fully tilted, a safety latch shall automatically engage and act as a positive lock. The lock is released by a pull cable. The hydraulic cylinders shall be equipped with velocity fuses to prevent the cab from falling, should the hydraulic system fail.

The front of the cab pivots and rides on the center bonded bushings by means of lubricated pivot pins that retain the cab yoke in the bushings. The bushings allow limited movement of the cab, and isolate the cab from noise and vibration.

The rear mounts consist of a pair of hydraulic cab latches mounted on rubber cushioned mounting brackets. Latches release when the pressure in the tilt system exceeds 500 PSI.

An ignition interlock system shall be installed for cab tilt operation. Cab tilt operation requires the master battery switch to be in the on position with the parking brake applied.

CAB TILT PUMP

An electric over hydraulic cab lifting pump shall be provided to tilt the cab for engine and transmission service. The pump shall be operated by a remotely wired control box with coiled cord, weather resistant plug, and receptacle. An

interlock shall be provided preventing the cab from inadvertently rising until the transmission is placed in the neutral position and the parking brake is set.

The entire cab shall be capable of tilting approximately 45-degrees to allow for easy maintenance of the engine and transmission.

FRONT GRILLE

The front grille will be a mirror polished stainless steel box style assembly with 470 square inches of open area on 100" wide cabs and 430 square inches of open area on 96" wide cabs. The grille will be backed with an aluminum honeycomb mesh to protect the radiator.

FRONT GRILLE LOGO

The front grille will be a non-lighted Ferrara logo.

INTAKE GRILLE, RIGHT SIDE W/EMBER SEPARATOR

A right stainless steel grille shall be installed approximately 70" above ground level on the right side of the cab between the front and rear cab doors. The grille shall have a minimum open area of not less than 119 square inches serving as an air intake and warm air dispersant system.

An Ember Separator shall be installed between the stainless steel grill and the air filter system allowing fresh air to pass through to the engine while preventing particles of .039 inches (1.0 mm) or larger from entering the system in accordance with the latest version of NFPA easily accessible through the exterior stainless steel grille.

The grille shall be notched to allow easy access without removing the cab handrail.

HEATED/REMOTE CAB MIRRORS

Two side-mounted Velvac model 713760 rear view mirrors shall be installed with an 8" X 16" mirror head and a separate 6" x 6-1/2" parabolic mirror. The mirror head shall be heated and remotely adjustable by the driver. The mirrors shall be aerodynamically designed to reduce wind buffeting and resultant vibration. The housings shall be polished stainless steel.

The mirrors support tubes shall be stainless steel, with breakaway mounting brackets.

EXTERIOR HANDRAILS, CAB

Four-(4) exterior handrails shall be installed on the cab, one-(1) each side just rearward of the front doors and one-(1) each side just rearward of the rear doors. The handrails shall be 24" in length and constructed from knurled stainless steel with a slip-resistant finish. The handrails shall be mounted with chrome plated end stanchions and will have a molded rubber gasket shall be mounted between the handrails and the cab in order to prevent corrosion.

FENDERETTES, POLISHED STAINLESS STEEL

The cab fenderettes will be bright polished stainless steel securely fastened to the cab wheel wells on each side. A rubber gasket will be installed between the fenderettes and cab to eliminate contact of dissimilar metals.

EXTERIOR TRIM, REAR CAB STEP WELL

The rear cab door stepping surfaces shall be trimmed with aluminum tread plate. There shall be tread plate covers that provide access to the chassis battery system.

TREAD PLATE BACK OF CAB

The entire back wall of the cab shall be covered with 1/8" (.125") thick aluminum tread plate. The tread plate shall be fastened to the cab with stainless steel fasteners. A bead of caulking shall be applied to the perimeter of the tread plate.

TREAD PLATE CAB ROOF

The roof the cab shall be covered with 1/8" (.125") aluminum tread plate. The tread plate shall be fastened to the cab with stainless steel fasteners. A bead of caulking shall be applied to the perimeter of the tread plate.

CAB CORROSION PROTECTION AND SOUND DEADENING

The apparatus cab shall be completely covered in one of two types of paint, prior to installation of any interior or exterior components, including insulation and floor mats. This process shall be required to guard against corrosion as well as to keep the cab as quiet as possible for firefighters.

The entire underside and double wall area at the front of the cab shall be cleaned, primed and sprayed with black F-Shield as a finish coat. This shall include any areas that are not normally visible after the cab is complete.

The entire cab interior shall be sprayed with F-Shield, as described later in these specifications. F-Shield shall be sprayed over the ceiling, floor, side walls, forward fire wall, rear wall, dash, engine tunnel, interior cab doors and both sides of the cab door panels.

The cab exterior shall be completely finish painted as described later in these specifications. This shall include the areas under any optional rear wall or cab roof diamond plate overlays.

The fire department shall, through the Virtual Manufacturing feature described earlier in these specifications, have the ability to see these areas covered with F-Shield prior to installation of items such as engine tunnel insulation, cab interior insulation and headliners, engine tunnel covering, floor mats, cab inner door panels, etc.

As a result of these cab corrosion protection measures, a ten-(10) year warranty against cab corrosion shall be provided to the fire department.

INTERIOR CAB FINISH

The interior of the cab shall be painted with a dark gray “F-Shield”. The cab metal finish shall be covered with a coat of adhesion promoting primer.

The headliner (front and rear) and rear wall (if applicable) shall be covered with heavy-duty gray vinyl.

FLOOR MATS/ENGINE TUNNEL COVERING

The floor mats and engine tunnel shall be covered with gray pebble grain vinyl with 1/4" (.250") foam backing. The edges of the floor mats shall be trimmed with a cast aluminum foot plate for a pleasing appearance.

INTERIOR TRIM, REAR WALL ALUMINUM PANEL

The entire interior rear wall of the cab shall be covered with 3/16" (.1875") smooth aluminum plate coated with “F-Shield”.

The color of the rear wall panel shall match the interior of the cab.

CAB GRAB HANDLES, INTERIOR

Two-(2) interior grab handles installed in the cab on the "A" posts, one-(1) each side. The grab handles shall be constructed of rubberized steel.

Four-(4) interior grab handles installed in the cab, one-(1) each side on top of the front door panels adjacent to fixed window and one-(1) each side on the rear door panels mounted diagonally. The grab handles shall be constructed of 1-1/4" knurled stainless steel. The gab rails shall be mounted with chrome plated end stanchions.

There shall be one-(1) interior grab handle installed on the inside of each rear cab door. The handles shall extend horizontally with width of the window just above the window sill. The grab handles shall be constructed of bright stainless steel.

GLOVE BOX

The glove box will be an integral part of the welded aluminum dashboard assembly and located in front of the officer's seat. The door will be drop down style and constructed from aluminum with latch. The area above the glove box will be flat for a work surface or optional MDT mounting.

SUN VISORS

The cab shall be equipped with three-(3) sun visors. The visors shall be installed on the overhead panel and provide approximately 90 percent coverage across the width of the cab. The visors shall be approximately 26" wide and 6" tall.

UPPER DOOR PANELS, INTERIOR

There shall be four-(4) interior upper front and rear door panels installed covered with “F-Shield” extending from the window down to the lower kick plate. The color of the panels shall match the interior of the cab.

REFLECTIVE STOP SIGNS

There shall be four-(4) "STOP" signs installed in the cab, one-(1) on the lower door panel of each cab door.

EQUIPMENT MOUNTING PLATE, ENGINE TUNNEL

There will be one-(1) equipment mounting plate installed on the engine tunnel constructed of 3/16" smooth aluminum plate covered with "F-Shield".

INSTRUMENTATION

For easy viewing, gauges shall be white faced with black lettering and adjustable intensity LED backlighting. The gauges shall meet SAE J-1939 protocol to eliminate redundant sending units. The gauge crystal shall be flat glass with rubber o-ring seal. The panels shall be divided into groups of instruments that make identification sensible and easy to view.

The following instruments shall be included in the gauge panel in front of the driver:
Left Side-
An all in one gauge that contains; dial type tachometer, dial type engine oil pressure with warning light and alarm and dial type engine coolant temperature with warning light and alarm.

Center-
-Driver information display panel with alarm output for gauge warning lights
-Dial type transmission temperature gauge with warning light
-Dual diesel fuel/DEF level gauge with low level indicators

Right Side-
An all in one gauge that contains; dial type speedometer, dial type primary air pressure gauge with warning light and alarm and dial type secondary air pressure gauge with warning light.

The following indicator lights shall be provided in the gauge panel:
-Air cleaner restriction light
-High beam indicator
-Parking brake indicator
-Turn signal indicators
-Low primary air
-Low secondary air
-Battery voltage error
-Door ajar
-Auto chassis lubrication system (if equipped)
-Emergency engine shutdown (if equipped)
-Diagnostic indicators for airbag (if equipped), engine, transmission and ABS

The electronic diagnostic connections for the engine, transmission, and ABS brakes shall be located in the lower left firewall.

Service Access
The driver's instrumentation area shall be made of textured black non-glare panels affixed to the aluminum dash. There shall be a single gauge panel, secured with a bottom hinge and four-(4) quarter-turn fasteners. Access to the gauge clusters shall be accomplished simply by releasing the latches and pulling the panel outward. Other gauge access designs are not acceptable.

The chassis electrical access panel shall be located in the center of the aluminum dash, between the switch panel and the windshield. There shall be a lift up cover, with two-(2) recessed lift-and-turn latches for quick access to the panel. The opening to the electrical shall measure approximately 15" wide near the switch panel and 37" wide toward the windshield.

DRIVER'S INFORMATION DISPLAY

There shall be a 10.8" x 2.44" display panel on the driver's gauge cluster that will illuminate various caution and warning indicator lamps. This display also contains a 340 x 90 monochrome LCD for display of specific and user selectable data. The display unit reads data from the J1939-11 power train communications network. Display will be capable of but not limited to the following features:

-Auto Self-Test

-Viewing the state of each digital or analog input to the unit
-Viewing the state of each output
-Allows users ability to set service reminders by distance or hours of operation
-Allows users ability to set data screens in various formats i.e. bar graph / text
-Viewable active and stored power train ECU fault data.
-Diagnostics screen allows user to select and view a specific source such as engine / transmission
-Display is selectable between English and metric readings.
-Messages and Icons will pop up in display when a condition exists such as: transmission oil life, filter or other service needed as reported by the Allison Transmission ECU engine conditions: low oil pressure, high coolant temperature, low coolant level, water in fuel, check / stop engine, regeneration needed, high exhaust temperature

Indicator lights may also accompany pop up messages:
Door ajar indicator will also pop up a "Do Not Move Vehicle, Check all doors and Items that Raise or extend beyond apparatus cab or body" message

ELECTRICAL SYSTEM, CHASSIS

The electrical system shall consist of all solid-state components contained inside sealed aluminum castings and/or weatherproof Deutsch enclosures. Each module is to have a set of diagnostic LED indicators. All inputs and outputs shall be configured into a scalable electrical harness utilizing Deutsch connectors. The modules shall not have special mounting requirements.

The system shall consist of a main solid-state control module and the appropriate combination of solid-state distribution modules, switch modules, and other solid-state modules as required for the application. The system will also include a 5-inch screen mounted in the driver side overhead area. This screen will display door ajar & seat belt warnings, electrical system diagnostics and informational screens. The electrical system will also utilize programable Smart Switches, these switches will utilize both ICON and text engraved covers. The switches will be backlit Red when the system is powered up & the switch is not active. When the switch is activated, the ICON on the switch will change color to either, Green, Blue or Cyan, depending on the switch function.

The system, at a minimum, shall be capable of performing the following functions:
-Load management and sequencing
-Switch loads
-Receive digital and analog signals
-Perform and report diagnostics
-Continuously report vehicle status
-System is expandable

The main solid-state control module shall have an integrated Load Manager. The Load Manager Sequencer shall assure that loads are applied and removed gradually, thus eliminating the possibility of inducing failures in the vehicle's equipment.

The load manager shall be a precision, solid state controller which sequentially switches "ON" multiple circuits at 1/2 second intervals. The sequencer shall be initiated by the "Emergency Master" switch. The sequencer priority shall be set at the apparatus pre-build conference.

The Load Manager shall monitor the vehicles battery voltage. Loads may be shed at any voltage at one tenth of volt increments. A low voltage warning may be set at any set point (usually 11.5 volts). The load manager can shed any output that is controlled by the system (there is no limit to the number of loads that may be managed by the network).The load shed priority shall be set by the circuit significance, followed closely by circuit draw. The Load Manager shall shed loads until the voltage level begins to rise.

A voltage monitor shall be built into the electrical system. It shall activate a warning when the alternator output voltage falls below any desired voltage (usually 11.8 volts).

Placement of modules within the cab enables a reduction in wire harness bundles. Elimination of redundant harnessing and separate circuit boards, relay and circuit breakers & electrical hardware. Reducing separate electrical or interlock subsystems and associated electronics for controlling various electrical loads and inputs.

The electrical system shall utilize a Controller Area Network (J1939) protocol to provide control signals for "real time" operation.

The electrical system shall be field reprogrammed and re-configurable by an authorized service center. This complete system eliminates the need for the following separate components or devices: load manager, load sequencer, warning lamp flasher, headlamp flasher, door open notification system, interlock modules, and VDR.

The base system includes:
-Total Load Management
-Load Shedding Capabilities
-Load Sequencing Capabilities
-On- Board Diagnostics Readout
-Very reliable, solid- state hardware
-Error Reporting
-Continuous system monitoring and reporting
-Emergency warning lamp flasher
-Field Configurable
-Expandability Capabilities
-Advanced PC Diagnostics
-VDR

The wiring harness shall conform to SAE J-1128 with GXL temperature properties. All exposed wiring shall be run in loom with a minimum 289 ºF rating. All wiring looms shall be properly supported and attached to body members along the entire run. All wiring shall be mounted as to provide protection from water and heat. All connections shall be crimp type with heat shrink tubing with insulated shanks to resist moisture and foreign debris such as grease and road grime. Weather resistant connectors shall be provided throughout to ensure the integrity of the electrical system. Gold contacts shall be used where required for superior connectivity and improved performance. All wiring looms shall be properly supported and attached along the entire run. At any point where wire or looms must pass through metal, rubber grommets shall be installed to protect the wire from abrasion.

Wiring shall be individually and permanently numbered, function and color-coded using an indexing numbering system in which all circuits are categorized by function and shall be permanently marked every three-(3) inches on the insulation to allow for easy identification.

All internal wire end terminals, including locking bulkhead connectors, shall be mechanically affixed to the wire ends by machine terminal crimping presses. No hand-crimped terminals shall be acceptable.

All internal splices shall be ultrasonically welded connections - no butt style connections shall be acceptable. All internal wiring shall be of the high temperature GXL type wire and shall be protected by wiring duct wherever possible.

As programmed electrical system reports shall be generated by the electrical system software and furnished in the apparatus manuals. A master circuit list of electrical circuits that the apparatus builder installs shall be furnished in the delivery manuals.

MAIN CENTER DASH

The main center dash area shall include three-(3) removable panels located one-(1) to the right of the driver position, one-(1) in the center of the dash and one-(1) to the left of the officer position. The center panel shall be within comfortable reach of both the driver and officer. The panel shall be constructed of 5052-H32 Marine Grade, 1/8 inch thick aluminum plate.

STEERING COLUMN

The steering column shall be a Douglas Autotec tilt and telescope. A lever mounted on the side of the column shall control the tilt and telescope features. A Signal-Stat (self-canceling) turn signal switch shall be mounted to the column. The steering shaft from the column to the meter box shall have a rubber boot to cover the shaft slip and a second rubber boot to seal the passage hole in the floor.

The steering wheel shall be 18 inches in diameter.

The Signal-Stat turn signal switch shall include the following functions:

- Left and right turn signals
- High beam dimmer control
- Hazard warning switch
- Two speed with intermittent windshield wiper control
- Windshield washer control

HEATING/AIR CONDITIONING SYSTEM

The climate control system shall use three-(3) heater-air conditioner units.

The front circuits shall use two-(2) heater-air conditioning units, mounted under the dash on the driver's side and under the officer's side. These units are each rated at 14,700 BTU heating and 19,200 BTU cooling. The units shall blow up toward the windshield through four-(4) fixed vents in the dash. Additionally, there shall be two-(2) adjustable vents each side to direct air at the lower portion of the driver and officer seating areas. Two-(2) switches, including low/med/high and heat/off/ ac, shall control the front system.

A DEFROST / DEFOG switch shall be installed to operate both the front heating, systems in the DEFROST selection to provide pure heat for defrosting. In the DEFOG selection the front heating, and cooling systems are activated. This provides hot and dry air for defogging purposes. In either postion the hot and dry air shall vent through the fixed vents in the dash.

The two-(2) front systems shall combine to put out a total of 688 CFM air flow.

The rear circuit shall use one large heater-air conditioner unit with a rating of 34,150 BTU cooling and 36,000 BTU heating. It shall be mounted under the forward facing rear seats. Ducting shall run up the rear wall to adjustable vents (minimum of six) running along the center of the ceiling toward the front of the cab. Two-(2) switches including high/med/low and heat/off/AC shall control the unit. In addition to the rear control switches, there shall be an ON/OFF switch located near the driver to disable the rear unit if needed.

The rear system shall put out a total of 640 CFM air flow.

The total system shall have a capacity of 72,550 BTU cooling, 65,400 BTU heating and a total in-cab air flow of 1,328 CFM.

The entire roof and back wall shall be heavily insulated with 1" foam to enhance the cooling system.

All three-(3) heaters shall be plumbed with a shut off valve at the engine.

The air conditioning system shall be powered through two-(2) engine driven 9-1/2 cubic inch compressors.

Two-(2) roof top condensers, each rated at 38,700 BTU, shall be provided.
The two-(2) roof top condenser housings shall be black in color.

SEAT MATERIAL

The seats shall be covered with Bostrom Durawear material.

SEAT COLOR

The cab seats shall be gray/black in color.

SEAT BELTS

The seats shall be equipped with a standard 3-point seat belt with single automatic retractor.

NO SCBA BRACKETS REQUIRED

The SCBA brackets shall be provided and installed by the Fire Department, unless otherwise stated later in the specifications.

NO FILLER PANELS REQUIRED

No SCBA seat filler panels shall be provided with the apparatus.

DRIVER'S SEAT

The driver's seat shall be a H. O. Bostrom Sierra, Air-100 RX air suspension, high back bucket seat.

The seat shall have a tapered and padded seat cushion. The seat shall have a five inch fore and aft adjustment, a four inch height adjustment with a reclining seat back. The seat air ride suspension shall be pneumatically controlled from a control switch on the forward lower edge of the seat.

OFFICER'S SEAT

The officer's seat will be a H. O. Bostrom Sierra, Air-100 air suspension, high back bucket seat.

The seat will have a tapered and padded seat cushion. The seat will have a five inch fore and aft adjustment, a four inch height adjustment with a fixed seat back. The seat air ride suspension will be pneumatically controlled from a control switch on the forward lower edge of the seat.

CREW SEAT, INBOARD FORWARD FACING

The inboard forward facing seat installed against the rear cab wall will be a H. O. Bostrom Sierra, 400 Series, FX fixed high back non SCBA bucket seat.

The seat will have a tapered and padded seat cushion.

The forward facing center seating position will include an enclosed style seat riser located and installed at the rear wall. The seat frame will be constructed of Marine Grade aluminum plate and will be sprayed with F-Shield to match the cab interior.

CREW SEATS, OUTBOARD FORWARD FACING

The two-(2) outboard forward facing seats installed against the rear cab wall will be a H. O. Bostrom Sierra, 400 Series, FX fixed high back non SCBA bucket seat with flip bottom.

The seats will have a tapered and padded seat cushion.

The forward facing seating positions will include an enclosed style seat riser located and installed at the rear wall. The seat frame will be constructed of Marine Grade aluminum plate and will be sprayed with F-Shield to match the cab interior.

The seat will be equipped with the Bostrom Fold & Hold option.

COMPARTMENT, DRIVER'S SIDE OUTBOARD REAR FACING

One-(1) EMS compartment constructed of 1/8" smooth aluminum will be mounted in the cab. This cabinet will be installed rear facing behind the driver's seat. The interior dimensions will be approximately 23-1/4" wide x 18-1/4" deep x height to be determined. The cabinet will be supplied with a sprayed finish to match the interior of the cab.

EMS COMPARTMENT NETTING, INTERIOR

Cargo netting will be installed over the interior opening of the driver's side EMS compartment. The netting will be permanently fixed at the bottom of the compartment with self-locking seat belt latches at the top and sides.

LIGHT(S), EMS COMPARTMENT

There will be one (1) LED strip light will be installed in the driver's side EMS compartment.

SHELF, EMS COMPARTMENT

There will be one (1) vertically adjustable shelf (shelves) will be installed in the driver's side EMS cabinet. The shelf will be constructed of smooth aluminum and have a 2" lip at the front, sides and rear of the shelf.

12V POWER OUTLET(S), EMS COMPARTMENT

There will be one (1) 12-volt power outlet(s) installed in the driver's side EMS compartment.

COMPARTMENT, OFFICER'S SIDE OUTBOARD REAR FACING

One-(1) EMS compartment constructed of 1/8" smooth aluminum will be mounted in the cab. This cabinet will be installed rear facing behind the officer's seat. The interior dimensions will be approximately 23-1/4" wide x 18-1/4" deep x height to be determined. The cabinet will be supplied with a sprayed finish to match the interior of the cab.

EMS COMPARTMENT DOOR, INTERIOR

Cargo netting will be installed over the interior opening of the officer's side EMS compartment. The netting will be permanently fixed at the bottom of the compartment with self-locking seat belt latches at the top and sides.

LIGHT(S), EMS COMPARTMENT

There will be one (1) LED strip light will be installed in the officer's side EMS compartment.

SHELF, EMS COMPARTMENT

There will be one (1) vertically adjustable shelf (shelves) will be installed in the officer's side EMS cabinet. The shelf will be constructed of smooth aluminum and have a 2" lip at the front, sides and rear of the shelf.

12V POWER OUTLET(S), EMS COMPARTMENT

There will be One (1) 12-volt cigar lighter style power supply installed in the officer's side EMS compartment.

ACCESSORY PANEL, BLUE SEA

There shall be a blue sea model 4365 12-volt accessory panel. The panel shall be equipped with one-(1) 12-volt socket outlet and two-(2) 2.1 amp USB connections.

The panel shall be wired to direct battery power with the appropriate wire size and fuse.

The panel shall be in the center emergency switch panel below the Whelen siren.

The fuse black will be located on the side of the engine tunnel behind the officer's seat.

RADIO

A Jensen brand heavy-duty radio with weather band, AM/FM stereo receiver and Bluetooth capabilities will be installed in a customer specified location. Radio will be the current, commercially available heavy-duty single-DIN automotive model at time of vehicle manufacturing date.

A small antenna will be located on the cab roof for AM/FM and weather band reception.

There will be two-(2) speakers installed in the front portion of the cab recessed overhead and two-(2) speakers installed in the rear portion of the cab overhead. The speakers will be provided for connection to the sound system.

The radio will be located in the overhead panels per the dash layouts.

ACCESSORY POWER

The electrical distribution panel shall include two-(2) power studs. The studs shall be size #10 and each of the power studs shall be circuit protected with a fuse of the specified amperage. One-(1) power stud shall be capable of carrying up to a 40 amp battery direct load and one-(1) power stud shall be capable of carrying up to a 20 amp ignition switched load. The two-(2) power studs shall share one-(1) #10 ground stud.

ELECTRONIC SIREN

There shall be one-(1) Whelen model 295SLSA1 siren provided in the cab. The siren amplifier shall incorporate a 12V/200W siren installed on an aluminum alloy chassis covered by a black polycarbonate powder coated housing for maximum protection. The 295SLSA1 shall have the ability for either 100 or 200 watt output. The front overlay shall be made of velvet Lexan™ with a matte finish. The lettering and artwork on the overlay shall be illuminated with adjustable backlighting of soft LED non-glaring green. The operating controls will consist of a power switch, manual button, PA volume switch, horn button, and rotary switch. The 295SLSA1 PC board shall have input polarity protection, output short circuit protection. The siren amplifier shall include a 20A/32V fuse. The solid state siren speaker amplifier shall be vibration resistant. The microphone shall be hardwired to the 295SLSA1.

The 295SLSA1 shall have 21 Scan-Lock™ siren tones with two manual functions for additional siren tones. The siren amplifier shall have the ability to customize the placement of each siren tone with the rotary switch. The siren amplifier shall have a “Siren in Use” icon driver and adjustable preset repeat radio volume. The 295SLSA1 shall have a “Park Kill” feature that disables the siren when the vehicle is in park. The PTT (push to talk) switch on the microphone shall override all siren functions. The 295SLSA1 shall have a combination On/Off and horn ring transfer switch with Bi-polarity horn/ring activation control. The 295SLSA1 shall have SI Test® capability to perform a complete diagnostic silent test of amplifier and speaker(s). The siren amplifier shall have a quick disconnect plug. The 295SLSA1 shall have the ability to activate siren tones with “Aux Enable” input either with a slide switch, power controls, or relay-to-ground connector. The 295SLSA1 shall meet Class A requirement for SAE, AMECA, KKK1822, and California Title XII. The sire amplifier shall have an adjustable bail bracket with installation hardware. The 295SLSA1 is covered by a two year factory warranty.

HORN, ELECTRIC

A single electric horn activated by the steering wheel horn button shall be provided.

BACK-UP ALARM

There shall be one-(1) NFPA compliant electronic back-up alarm installed at the rear of the apparatus. The alarm shall be wired to the transmissions output signal and is automatically activated when the transmission is shifted into reverse.

LIGHTS, CAB DOME

Four-(4) Whelen 6" Round Super-LED model 60CREGCS shall be provided in the cabs headliner. The steady burn 12v interior light shall incorporate six red and six clear Super-LEDs and a clear non-optic translucent hard coated polycarbonate lens for maximum output. The hard coated lens shall provide extended life/luster protection against UV

and chemical stresses. The conformal coated PC board and foam in place gasket shall provide additional protection against environmental elements. The 60CREGCS includes Hi/Low intensity mode standards and On/Off dual switch function. The solid state interior light shall be vibration resistant. The interior light is covered by a five year factory warranty

The white LED lights shall be activated when any cab door is in the open position automatically switching off all red lights currently on and reactivated when the door is closed.

LIGHT, DOOR AJAR

A Whelen model TIR3 door ajar light shall be located on the cab's ceiling. This light shall be a self-contained flashing light that activates when any of the apparatus doors are open. The lens color shall be red.

An audible alarm shall be installed in conjunction with the door-ajar warning light system. The panel only operates when the ignition switch is in the “On” position and the parking brake released.

LIGHTS, STEP WELL

Six-(6) LED lights shall be provided, two-(2) in each front cab step well and one-(1) in each rear cab step well. Each light shall activate when the cab door in opened.

LIGHTS, ENGINE MAINTENANCE

Two-(2) white 4" LED round lights shall be mounted under the cab. The lights shall automatically activate when the cab is tilted.

FRONT LIGHTING

The headlamps, turn signals, front warning and intersection lights shall be located within chrome warning light modules, one-(1) each side front of the apparatus.

HEADLIGHTS

Four-(4) FireTech LED rectangular headlights model FT-4X6-4KIT shall be installed in the warning light modules, two-(2) each side. The headlights shall be mounted in the upper positions of the module.

The kit shall consist of 2 fixtures which operate as SAE VOR “high/low” beams, and 2 fixtures which operate as SAE VO “high-only” beams. All 4 headlights shall have a SAE “P” parking lamp halo surrounding the driving beams, which shall be energized any time the vehicle marker lights are turned “on” (first click of the headlight switch). Optically, on the high/low headlight, an articulated set of elliptical optics must be used to illuminate the foreground while operating in “low” beam mode. The lens of the high/low beam headlight shall be marked “DOT VOR SAE HL P 16.” The lens of the high-only beam shall be marked “DOT VO SAE HL P 16.” All circuits of the headlights shall be designed to operate from 9-32v DC.

All 4 fixtures must be manufactured such that the internal pressure of the headlight remains constant regardless of operating temperature. The housing shall be equipped with a mechanically fastened GORE PolyVent. Similar functioning vent materials affixed to the housing using adhesive shall not be acceptable for substitution.

The headlights shall be installed, wired, and aimed, in accordance with FMVSS108. The manufacturer of the headlights shall warrant the headlights against defects for the life of the apparatus.

TURN SIGNALS, FRONT

Two-(2) Whelen 600 series 5mm LED model 60A00TAR turn signal lamps shall be installed, one-(1) each side directly below the low beam headlights in the warning light modules. The turn arrow light shall incorporate 92 amber 5mm-LED and a clear non-optic hard coated polycarbonate lens. The hard coated lens shall provide extended life/luster protection against UV and chemical stresses. The encapsulated 5 mm-LED populated arrow shaped PC board and foam in place gasket shall provide additional protection against environmental elements. The solid state turn arrow light shall be vibration resistant. The turn arrow light is covered by a five year factory warranty.

LIGHTS, TURN SIGNAL/MARKER

Two-(2) Whelen 400 series model 40A00AAR amber LED lights shall be mounted, one-(1) each side outboard of the turn signal at a 45-degree angle off the front of the cab. The lights shall be part of the warning light module and are visible from both the front and sides of the vehicle.

LIGHTS, LED CORNERING

Two-(2) Whelen 400 series model 40R02Z*R flashing LED cornering lights shall be mounted, one-(1) each side below the marker lights in the warning light module. The lights shall be mounted at a 45-degree angle off the front of the cab and are visible from the sides and front of the vehicle. The warning light shall incorporate four red Super-LED, an optic hard coated polycarbonate lens, and utilize a metalized reflector with integrated TIR hybrid optics for maximum output. The hard coated lens shall provide extended life/luster protection against UV and chemical stresses. The conformal coated PC board and with the lens fitted with foam in place gasket assembly shall provide additional protection against environmental elements. The solid state warning lights shall be vibration resistant. The self-contained flashing light shall have 25 Scan-Lock™ flash patterns including synchronize feature and steady burn. An installation kit including mounting hardware and rubber gasket shall be provided for surface mounting. The 40R02Z*R will contain a 12” non-terminated pigtail. The warning light is covered by a five year factory warranty.

LIGHTS, FRONT DOT

There will be five-(5) DOT required marker lights will be provided in the specified brow light and not mounted to the cab roof.

LIGHTS, INBOARD LOWER FRONT

Two-(2) Whelen 600 Series Super-LED model 60R02FRR shall be installed, one-(1) each side inboard of the turn signal in the warning light modules. The warning lights shall incorporate red Linear Super-LEDs, a red optic hard coated polycarbonate lens, and utilize a metalized reflector with integrated TIR hybrid optics for maximum output. The warning lights is covered by a five year factory warranty.

LIGHTS, CAB GROUND

There shall be one-(1) Whelen 2G Series model 20C0CDCD 4" LED light mounted under each cab door illuminating the area below providing a safe entrance and exit for cab occupants. All cab ground lights shall automatically activate when any cab door is opened and by a switch located on the dash.

The 12v steady burn light(s) shall incorporate 12 clear LED and a clear optic hard coated polycarbonate lens. The hard coated lens shall provide extended life/luster protection against UV and chemical stresses. The encapsulated coated PC board and lens fitted with foam in place gasket assembly shall provide additional protection against environmental

elements. The solid state light shall be vibration resistant. The 20C0CDCD will contain 350 usable lumens. An installation kit including mounting hardware and rubber gasket shall be provided. The 20C0CDCD will contain a 12" terminated pigtail with a waterproof Deutsch® connector. The light is covered by a five year factory warranty.

VIDEO SYSTEM KIT, FRC INVIEW360

The vehicle shall be equipped with an FRC, model SNB100-C00 inView™ 360 Video system. This system shall provide the driver with a 360 degree birds-eye style view of the apparatus, along with individual camera views based on determined conditions.

The inView™ 360 system shall include-(4) four camera's standard, an Electronic Control Unit (ECU), required harnesses and a manual camera switch. The kit shall provide split video feeds with bird's-eye view and individual camera views. It shall be capable of integrating with an existing vehicle system for an automatic camera view, which seamlessly switches from front/left/right/rear views based on turn signal and reverse activation.

The cameras shall have dimensions of 1.3" L (34mm) x 1.9" H (48mm) x 2.4" W (61mm). The cameras shall have a 190-degree horizontal lens view angle, a relative aperture (F-stop) 2.0, and an HD resolution of 1920 x 1080 at 30 FPS (frames per second). The indoor/outdoor camera housing shall be aluminum die cast and be waterproof, rated to IP69.

The ECU (Electronic Control Unit) shall feature AHD video inputs from the cameras. The system shall have two-(2) video outputs, (1) HD (1920 x 1080) and (1) CVBS (SD) 720 x 480. It shall also feature a switch that allows the operator to override the default camera view, a second event switch to flag an event, so the video footage can be located easily at a later time and a third switch to activate a vehicle specific overlay. The ECU shall have dimensions of 6.8" L (173mm) x 1.5" W (38mm) x 4.9" H (123mm). The system operating voltage shall be from 10 to 32 VDC, and shall consume no more than 2.2 amps. The ECU shall feature built-in recording to record each camera input separately and support four-(4) 256GB SD cards (SD card sold separately). The system shall support six-(6) different view modes, configure & customize set up shall be supported via monitor and IR remote control.

IN CAB MONITOR, COLOR

An FRC SNB1option-MH0 360, 7" in cab video monitor shall be provided. The monitor shall include a 7" diagonal color LCD TV display monitor with viewing dimensions of 6.06" W x 3.42" H. The monitor shall be a TFT Active Matrix System display with an 800 x 480 resolution and a display format of 16:9 (aspect ratio).

The monitor will be located in the left front cab corner.

== Chassis Modifications - Custom - 622.001 06/06/22 ==

SAFETY SIGNS, GENERAL REQUIREMENTS

Safety signs with text will conform to the general principles of ANSI/NEMA Z535.4, *Product Safety Signs and Labels*. Safety signs without text will conform to the general principles for two-panel safety signs of ISO 9244, *Earth-Moving Machinery - Machine Safety Labels*.

Apparatus built for sale in the United States will employ safety signage that complies with ANSI/NEMA Z535.4.

Apparatus built for sale outside the United States will employ safety signage that complies with ANSI/NEMA Z535.4 or ISO 9244.

Safety signs referenced in this standard beginning with the letters FAMA will conform to the text and graphics of the referenced safety sign number found in FAMA TC010, *Standard Product Safety Sign Catalog for Automotive Fire Apparatus*.

SAFETY SIGNS, BATTERY EXPLOSION

A safety sign(s) FAMA01, will be provided near the battery location that warns of potential injury or death that could be caused by the batteries. The label will also state precautions that should be taken while working on or around the batteries.

SAFETY SIGNS, ROTATING SHAFTS

Safety signs FAMA02, will be provided on each side of the frame rail and in any other location(s) where rotating shaft hazards are apparent. The label will warn of potential injury or death that could be caused by the movement of the shaft(s) as well as precautions that should be taken while working on or around them.

SAFETY SIGNS, HOT SURFACES

Safety sign(s) FAMA03, will be provided near any hot surface that warns of potential injury or death that could be caused by contact with the surface. The label will also state precautions that should be taken while working on or around the surface.

SAFETY SIGNS, HOT EXHAUST

A safety sign FAMA04, will be provided near any hot exhaust surface that warns of potential injury or death that could be caused by contact with the surface. The label will also state precautions that should be taken while working on or around the surface.

SAFETY SIGN, SPINNING FAN

A safety sign FAMA05, shall be provided on both sides of the engine fan. The label will warn of potential injury or death that could be caused by the movement of the fan as well as precautions that should be taken while working on or around them.

SAFETY SIGNS, SEATED & BELTED

Safety signs FAMA07, which warns of the importance of seat belt use, will be visible from each seat that is intended to be occupied while the vehicle is in motion.

SAFETY SIGN, AIR CONDITIONING REFRIGERANT

If the apparatus is equipped with any type of air conditioning system, a safety sign FAMA09, will be provided that is located in an area that would be visible to service personnel. The label will state that the system contains R134A, the necessary precautions that should be taken and the dangers of working on or around the system.

SAFETY SIGN, CAB EQUIPMENT MOUNTING

A safety sign FAMA10, which warns of the need to secure items in the cab, will be visible inside the cab.

SAFETY SIGN, FIRE SERVICE TIRE RATING

A safety sign FAMA12, which warns of the special requirements for fire service–rated tires, will be visible to the driver entering the cab of any apparatus so equipped.

SAFETY SIGN, ELECTRONIC STABILITY CONTROL

If the apparatus is equipped with an electronic stability control system, a safety sign FAMA13, will be provided inside of the cab in view of the driver warning of the dangers of improper operation of the apparatus and the importance of safe driving. The label will also warn of potential injury or death that could be caused by improper operation of the apparatus.

SAFETY SIGN, CAB SEATING

A safety sign FAMA14 will be located in the cab visible to the operator.

The sign will read:
This vehicle has a seating capacity of __ personnel.

Carrying additional personnel may result in death of serious injury.

SAFETY SIGNS, HELMET WORN IN CAB

A safety sign FAMA15, which warns not to wear helmets while the vehicle is in motion, will be visible from each seat that is intended to be occupied while the vehicle is in motion.

SAFETY SIGN, VEHICLE BACKING

A safety sign FAMA17, will be provided inside of the cab in view of the driver advising of proper procedures to following when the apparatus is in reverse motion. The label will also warn of potential injury or death that be caused by failing to follow proper procedures.

SAFETY SIGNS, INTAKE/DISCHARGE CAP PRESSURES

If the apparatus is equipped with a pump system, safety signs FAMA18, will be provided in all areas that intakes and discharges are capped. The label will give instruction on how to properly remove the cap. The label will also warn of potential dangers, injury or death that be caused by failing to follow proper cap removal procedures.

SAFETY SIGNS, HOSE RESTRAINT REQUIRED

A safety sign FAMA22, which warns of the need to secure hose, will be visible to personnel at each hose storage area.

SAFETY SIGNS, CLIMBING METHOD INSTRUCTION

Safety signs FAMA23, which warns of the proper climbing method, will be visible to personnel entering the cab and at each designated climbing location on the body.

SAFETY SIGNS, RIDING ON EXTERIOR

Safety signs FAMA24, which warns personnel not to ride on the vehicle, will be located at the rear step areas and at any cross walkways.

SAFETY SIGN, PUMP TRAINING

A safety sign FAMA25, which warns of the need for training prior to operating the apparatus, will be located on the pump operator's panel.

SAFETY SIGNS, NO-STEP

Safety signs FAMA26, will be provided in any horizontal location that a firefighter may feel tempted to use as a step but is not designed, constructed or intended to be a stepping, standing or walking surface. The label will state that the surface is not intended for this purpose and indicate potential injury or death in doing so.

SAFETY SIGN, SIREN NOISE

A safety sign FAMA42, will be provided inside the driver's door warning of potential injury that could be received from the noise of the siren. The label will also state safety precautions that should be taken when the siren is in use.

SAFETY SIGN, APPARATUS MOVEMENT

A permanently affixed movement warning plate will be installed near the door ajar light that reads:

"DO NOT MOVE APPARATUS WHEN LIGHT IS ON".

PLATE, FLUID CAPACITY

A permanently affixed fluid date plate will be installed in the driving compartment to indicate the type and quantities of the following fluid used in the vehicle.

Engine Oil
Engine Coolant
Chassis Transmission Fluid
Pump Transmission Lubrication Fluid (if applicable)
Pump Primer Fluid (if applicable)
Drive Axle Lubrication Fluid
Air Conditioning Refrigerant
Air Conditioning Lubrication Oil
Power Steering Fluid
Cab Tilt Mechanism Fluid
Transfer Case Fluid
Equipment Rack Fluid
Air Compressor System Lubricant
Generator System Lubricant
Front Tire Pressure - Cold
Rear Tire Pressure - Cold

The following information will also be supplied on the fluid data plate:

Chassis Manufacturer
Production Number

H7195 Cinder Pumper Retail

Paint Number
Year Built
Date Shipped
Vehicle Identification Number

PLATE, OVERALL HEIGHT / LENGTH / WEIGHT

An overall height / length / weight information plate will be installed that can be clearly identified and visible to the driver while in the seated position showing the apparatus completed overall height, length, (in feet and inches) and gross vehicle weight (in tons) current to the apparatus manufactured date.

If changes to the vehicle occur while in service, the department must revise the overall height-length-weight plate.
== Pump Enclosure - Side Mount - 622.001 06/06/22 ==
PUMP ENCLOSURE, SIDE CONTROL

The pump enclosure superstructure shall be constructed of aluminum tubing.

The front of the pump module shall be covered with aluminum tread plate to keep road debris from the front of the pump.

The pump enclosure shall be supported at the top of the frame rails, in a minimum of four-(4) places. The module shall be secured with brackets bolted to both the pump enclosure support cross rails and the side of the chassis frame rails. This design is required to eliminate shifting and stress on the pump enclosure, pump panels and running boards.

The pump enclosure provides an area above the pump for the installation of crosslays or dunnage area.

Any pump enclosure constructed using any material other than aluminum or utilizing any other mounting method is not acceptable.
SEPARATE PUMP MODULE

The pump module will be a self-supported structure mounted independently from the body and chassis cab. The pump module design must allow normal frame deflection without imposing stress on the pump module structure or side running boards.
DUNNAGE AREA

An open area above the pump enclosure will be provided for additional equipment storage and will be trimmed with 1/8" aluminum tread plate on all vertical interior walls and shall have slotted aluminum floors.
PUMP PANELS

The operator's controls and gauges shall be mounted on pump panels constructed of 1/8" (.125) black anodized, non-glare aluminum. No vinyl coverings shall be acceptable as these surfaces are subjected to rough service and vinyl is susceptible to tearing.

H7195 Cinder Pumper Retail

The operator's master gauge panel shall be vertically hinged with push style latch for access to gauges and auxiliary controls.

The operator's control panel shall be located below the master gauge panel and constructed of 1/8" (.125) black anodized, non-glare aluminum.

All gauges and controls shall be properly identified with color-coded metal tags. The tags shall be affixed with industrial adhesive. The gauges shall be functionally grouped above each control.

The right side upper panel shall be vertically hinged with double doors and push style latches for pump compartment access. The doors shall be constructed of .1/8" (.125) black anodized, non-glare aluminum.

The right side lower panel shall be removable for serviceability. The panel shall be constructed of 1/8" (.125) black anodized, non-glare aluminum.

All instruments and controls shall be provided and installed as a group at the pump panel. The central midpoint or centerline of any valve control shall be no more than 72" vertically above the ground or platform that is designed to serve as the operator's standing position. The instruments shall be placed to keep the pump operator as far as practical from all discharge and intake connections and in a location where they are readily visible and operationally functional while the operator remains stationary.

A safety sign FAMA25, which warns of the need for training prior to operating the apparatus, shall be located on the pump operator's panel.

FULLY HINGED PUMP PANEL, RIGHT SIDE

One-(1) vertically hinged pump panel with push style latch shall be installed and constructed of the same material as stated in the pump module specifications. The hinged panel replaces the current right hand lower removable panel for ease of access to the pump compartment during routine maintenance.

PUMP PANEL LIGHT, LEFT SIDE

One-(1) LED pump panel strip light will be mounted under a light shield above the left pump panel. The light will be control with an on/off switch on the pump panel.

PUMP PANEL LIGHT, RIGHT SIDE

One-(1) LED pump panel strip light will be mounted under a light shield above the right pump panel. The light will be control with an on/off switch on the operator's pump panel.

LIGHT, PUMP COMPARTMENT

One-(1) LED compartment light shall be installed in the pump compartment for inspection or routine maintenance. The light shall be wired to the pump panel light switch.

RUNNING BOARDS, LEFT & RIGHT SIDE

Running boards shall be provided on the left and right side of pump module constructed of "Embossed" 3/16" (.1875) aluminum tread plate that flanges down 2-1/2" and in 1.00" for maximum rigidity then bolted to the modules substructure to facilitate removal.

The running board stepping surfaces shall comply with the latest version of NFPA 1901.

MASTER GAUGES, 4-1/2"

Two compound 4-1/2" master gauges shall be provided and installed on the pump operator's panel. The intake and discharge gauges are liquid filled with a solution to assure visual readings and reduce inner lens condensation. The body of the gauges shall be constructed of Zytel nylon with chrome-plated bezels. The face of the gauges shall be Spun Metal with black background and white markings accurate within 1%.

The pressure gauges shall maintain performance of all features and be free from defects in material and workmanship which includes fluid fill leakage and discoloration for seven years.

PRESSURE GOVERNOR and ENGINE MONITORING DISPLAY

Fire Research PumpBoss series PBA400-A00 pressure governor and monitoring display kit shall be installed. The kit shall include a control module, intake pressure sensor, discharge pressure sensor, and cables. The control module case shall be waterproof and have dimensions not to exceed 6 3/4" high by 4 5/8". The control knob shall be 2" in diameter with no mechanical stops, have a serrated grip, and a red idle push button in the center. It shall not extend more than 1 3/4" from the front of the control module. Inputs for monitored engine information shall be from a J1939 data bus or independent sensors. Outputs for engine control shall be on the J1939 data bus or engine specific wiring. Inputs from the pump discharge and intake pressure sensors shall be electrical.

The following continuous displays shall be provided:

Engine RPM; shown with four daylight bright LED digits more than 1/2" high
Check engine and stop engine warning LEDs
Engine oil pressure; shown on a dual color (green/red) LED bar graph display
Engine coolant temperature; shown on a dual color (green/red) LED bar graph display
Transmission Temperature: shown on a dual color (green/red) LED bar graph display
Battery voltage; shown on a dual color (green/red) LED bar graph display
Pressure and RPM operating mode LEDs
Pressure / RPM setting; shown on a dot matrix message display
Throttle ready LED.

A dot-matrix message display shall show diagnostic and warning messages as they occur. It shall show monitored apparatus information, stored data, and program options when selected by the operator. All LED intensity shall be automatically adjusted for day and night time operation.

The program shall store the accumulated operating hours for the pump and engine to be displayed with the push of a button. It shall monitor inputs and support audible and visual warning alarms for the following conditions:

High Battery Voltage
Low Battery Voltage (Engine Off)
Low Battery Voltage (Engine Running)
High Transmission Temperature
Low Engine Oil Pressure
High Engine Coolant Temperature

Out of Water (visual alarm only)
No Engine Response (visual alarm only).

The program features shall be accessed via push buttons located on the front of the control module. There shall be a USB port located at the rear of the control module to upload future firmware enhancements.

The governor shall operate in two control modes, pressure and RPM. No discharge pressure or engine RPM variation shall occur when switching between modes. A throttle ready LED shall light when the interlock signal is recognized. The governor shall start in pressure mode and set the engine RPM to idle. In pressure mode the governor shall automatically regulate the discharge pressure at the level set by the operator. In RPM mode the governor shall maintain the engine RPM at the level set by the operator except in the event of a discharge pressure increase. The governor shall limit a discharge pressure increase in RPM mode to a maximum of 30 psi. Other safety features shall include recognition of no water conditions with an automatic programmed response and a push button to return the engine to idle.

The pressure governor and monitoring pressure display shall be programmed at installation for a specific engine.

Production to located the pressure governor do that it does not get kicked when climbing the front compartment face steps.

FILL SUBSURFACE/RETURN LINE

There shall be one-(1) subsurface/return line installed in the booster tank. The subsurface/return line shall prevent aeration of the water in the booster tank under low water conditions. The subsurface/return line piping shall be of the same size as the “Tank Fill”.

PRESSURE GAUGES, 2-1/2"

The discharges will be provided with 2-1/2" pressure gauges. The discharge gauges will be liquid filled with a solution to assure visual readings and reduce inner lens condensation. The body of the gauges shall be constructed of Zytel nylon with chrome-plated bezels. The face of the gauges shall be white with black markings reading from zero to 400 PSI.

The gauges shall be installed at each discharge control on the pump operator's panel. On side mount pump applications with push pull handles each gauge shall incorporate a 1-piece module assembly consisting of the gauge, push-pull and trim bezel.

GAUGE BEZELS, CHROME

The pump panel master and pressure gauge bezels will be standard chrome finish.

PUMP PANEL TAGS

All discharges, gauges, and controls will be properly identified by color-coded metal tags. The metal tags will be affixed with 3M industrial adhesive.

PUMP SYSTEM, HALE QMAX SINGLE STAGE

PUMP ASSEMBLY

The entire pump shall be cast, manufactured, and tested at the pump manufacturer's factory.

The pump shall be driven by a drive line from the truck transmission. The engine shall provide sufficient horsepower and RPM to enable pump to meet and exceed its rated performance.

The entire pump, both suction and discharge passages, shall be hydrostatically tested to a pressure of 600 PSI. The pump shall be fully tested at the pump manufacturer's factory to the performance specs as outlined by the latest NFPA Pamphlet No. 1901. The pump shall be free from objectionable pulsation and vibration.

The pump body and related parts shall be of fine grain, cast iron alloy, with a minimum tensile strength of 30,000 PSI. All moving parts in contact with water shall be of high quality bronze or stainless steel. Pump utilizing castings made of lower tensile strength cast iron not acceptable.

Pump body shall be horizontally split, on a single plane, in two sections, for easy removal of entire impeller assembly including wear rings and bearings from beneath the pump without disturbing piping or the mounting of the pump in chassis.

The pump shall have one double suction impeller. The pump body shall have two opposed discharge volute cutwaters to eliminate radial unbalance.

Pump shaft to be rigidly supported by three bearings for minimum deflection. One high lead bronze sleeve bearing shall be located immediately adjacent to the impeller (on side opposite the drive unit). The sleeve bearing is to be lubricated by a force-fed, automatic oil lubricated design, pressure balanced to exclude foreign material. The remaining bearings shall be heavy-duty, deep groove ball bearings in the gearbox and they shall be splash lubricated.

The pump impeller shall be hard, fine grain bronze of the mixed flow design; accurately machined, hand-ground and individually balanced. The vanes of the impeller intake eyes shall be hand ground and polished to a sharp edge, and be of sufficient size and design to provide ample reserve capacity utilizing minimum horsepower.

The impeller clearance rings shall be bronze, easily renewable without replacing impeller or pump volute body, and of wraparound double labyrinth design for maximum efficiency.

The pump shaft shall be heat-treated, electric furnace, corrosion resistant, stainless steel, to be super-finished under packing with galvanic corrosion (zinc separators in packing) protection for longer shaft life. Pump shaft must be sealed with double lip oil seal to deep road dirt and water out of drive unit.

DRIVE UNIT

The drive unit shall be cast and completely manufactured and tested at the pump manufacturer's factory.

Pump drive unit shall be of sufficient size to withstand up to 16,000 ft. Lbs. Torque of the engine in both road and pump operating conditions. The drive unit is designed with ample capacity for lubrication reserve to maintain proper operating temperature.

The gearbox drive shafts shall be of heat-treated chrome nickel steel and at least 2-3/4" in diameter, on both the input and output drive shafts. They shall withstand the full torque of the engine in both road and pump operating conditions.

All gears drive and pump, shall be of highest quality electric furnace, chrome nickel steel. Bores shall be ground to size and teeth integrated, crown-shaved and hardened, to give an extremely accurate gear for long life, smooth, quiet running, and higher load carrying capability. An accurately cut spur design shall be provided to eliminate all possible end thrusts.

The pump ratio shall be selected by the apparatus manufacturer to give maximum performance with the engine and transmission selected.

If drive unit is equipped with a power shift, the shifting mechanism shall be a heat-treated, hard-anodized aluminum power cylinder, with stainless steel shaft. An in-cab control for rapid shift shall be provided that locks in road or pump.

Three warning lights with plates shall be provided to alert the operator when the drive unit has fully shifted from road to pump position. Two lights shall be located on the cabs instrument panel and the other on the pump panel adjacent to the throttle.

A 3" clapper check valve shall be installed between the suction side of the pump and the tank-to-pump valve. This 3" clapper valve shall remove the possibility of a water surge expanding the booster tank.

Pump system shall have an integral discharge manifold system that allows a direct flow of water to all discharge valves.

PACKING GLANDS

The pump shaft shall have only one packing gland located on the inlet side of the pump. It shall be of split design for ease of repacking. The packing gland must be a full circle threaded design to exert uniform pressure on packing and to prevent "cocking" and uneven packing load when it is tightened. It shall be easily adjusted by hand with rod or screwdriver, with no special tools or wrenches required. The packing rings shall be of a unique, permanently lubricated, long life graphite composition and have sacrificial zinc foil separators to protect the pump shaft from galvanic corrosion.

PUMP SHIFT

An air operated pump shift shall be installed in the chassis cab to engage the fire pump. Provisions shall be made for placing the pump drive system in operation using controls and switches that are clearly identified and within convenient reach of the operator while in the cab.

A green indicator light shall be installed on the cab dash and labeled "Pump Engaged".

Where an automatic chassis transmission is provided, a green indicator light in the driving compartment and a green indicator light located at the pump operator's position shall be provided and shall be energized when both the pump shift has been completed and the chassis transmission is engaged in pump gear.

The light in the driving compartment shall be labeled "OK TO PUMP". The light on the pump operator shall be positioned adjacent to and preferably above the throttle control and shall be labeled "Warning: DO NOT OPEN THROTTLE UNLESS LIGHT IS ON". The green light on the pump operator's panel shall be energized when the pump is engaged, the transmission is in drive, and the parking brake is set.

PRIMING SYSTEM, PUMP

A Trident Model 31.001.2 air operated priming system shall be installed. The unit shall be of all brass and stainless steel construction and designed for fire pumps of 1,250 GPM (4,690 LPM). Due to corrosion exposure no aluminum or vanes shall be used in the primer design. The primer shall be two-barrel design with ¾” NPT connection to the fire pump.

The primer shall be mounted above the pump impeller so that the priming line will automatically drain back to the pump. The primer shall also automatically drain when the panel control actuator is not in operation. The inlet side of the primer shall include a brass 'wye' type strainer with removable stainless steel fine mesh strainer to prevent entry of debris into the primer body.

Performance, Safety, and NFPA Compliance

The priming system shall be capable to a vertical lift to 22 inches of mercury and shall be fully compliant to applicable NFPA standards for vertical lift. The system shall create vacuum by using air from the chassis air brake system through a two-barrel multi-stage internal "venturi nozzles" within the primer body. The noise level during operation of the primer shall not exceed 75 Db.

Air Flow Requirements

The primer shall require a minimum of 15.6 cubic foot per minute air compressor and shall be capable of meeting drafting requirements at high idle engine speed. The air supply shall be from a chassis supplied 'protected' air storage tank with a pressure protection valve. The air supply line shall have a pressure protection valve set between 70 to 80 PSIG.

Primer Control

The primer control shall have a manually operated, panel mounted "push to prime" air valve; which will direct air pressure from the air brake storage tank to the primer body. To prevent freezing, no water shall flow to and from the panel control.

Power Requirements

To reduce the electrical power requirements on the fire apparatus the priming system shall be air powered. The system shall not require annual tear-down and maintenance, an electric motor, lubrication, belt drive, or clutch assembly.

Warranty

The primer shall be covered by a five-(5) year parts warranty.

VALVE, MASTER DRAIN

There shall be a master drain valve recessed mounted below the pump module under the side running board, connecting all drain lines, with the capacity to discharge water simultaneously from all locations to below the chassis frame rails.

VALVE, INDIVIDUAL DRAIN

All lines shall drain through the master drain valve or shall be equipped with individual drain valves, easily accessible and labeled.

One-(1) individual quarter turn drain valve shall be furnished for each 1-1/2" or larger discharge port and each 2-1/2" gated auxiliary suction.

The drain/bleeder valves shall be located at the bottom of the side pump module panels.

All drains and bleeders shall discharge below the running boards.

PUMP TEST POINTS

Two-(2) test plugs shall be pump panel mounted for testing of vacuum and pressures.

PUMP CERTIFICATION, 1750 GPM

The pump when dry, will be capable of taking suction and discharging water in accordance with current NFPA 1900. The pump will be tested at the manufacturer's facility by an independent, third party testing service. The conditions of the pump test will be as outlined in current NFPA 1900. The tests will include, at minimum, the pump test, the pumping engine overload test, the pressure control system test, the priming device tests, the vacuum test, and the water tank to pump flow test as outlined in current NFPA 1900.

A Piping hydrostatic test will be performed as outlined in current NFPA 1900.

The pump will meet and perform the following test to receive certification:
100% of rated capacities at 150 PSI net pump pressure
100% of rated capacities at 165 PSI net pump pressure
70% of rated capacities at 200 PSI net pump pressure
50% of rated capacities at 250 PSI net pump pressure

PUMP TEST CERTIFICATION PLATE

A permanently affixed plate shall be installed at the pump operator's panel. It shall provide the rated discharge and pressures together with the speed of the engine as determined by the certification test for each unit. It shall also provide the position of the parallel/series pump used and the no load governed speed of the engine as stated by the engine manufacturer on a certified brake horsepower curve.

A label shall be provided on the pump operator's panel that states the following:
"Warning: Death or serious injury might occur if proper operating procedures are not followed". The pump operator as well as individuals connecting supply or discharge hoses to the apparatus must be familiar with water hydraulics hazards and component limitations.

STEAMER INLETS, 6"

A 6" NST steamer inlet with removable screen and long handle cap shall be provided on the left and right side pump panels.

RELIEF VALVE, INTAKE

There shall be a suction side relief valve provided in the pump system. The relief valve is adjustable from 50-250 psi and set at the factory at 125 psi. The discharge from the valve shall be directed toward the ground and away from the pump operator.

TANK TO PUMP

The booster tank shall be connected to the intake side of the pump with a check valve. The 3" tank to pump line shall run from a bottom sump into the 3" valve. To prevent damage due to chassis flexing or vibration, a short 3" flexible rubber hose coupling shall be used to connect the tank to the intake valve.

The tank to pump valve shall be a quarter turn fixed pivot design. The valve shall be controlled by a chrome push/pull locking "T" handle installed at the pump operator's panel.

TANK FILL

A 2" tank fill line shall be provided, using a quarter turn full flow ball valve and high-pressure flexible hose. The valve shall be push pull controlled from the pump operator's panel.

ENGINE COOLER

The engine cooler shall be installed in-line from the discharge side of the pump, and installed in the engine cooling system. There shall be a 1/2", quarter turn valve installed thru the pump panel and shall be clearly labeled.

PUMP COOLER

The pump shall have a 3/8" line installed from the pump discharge, to the water tank to cool the pump during long periods of pumping when water is not being discharged. The pump cooler shall be controlled from the pump operators panel by a 1/2" valve consisting of a cast bronze body with 1/4 turn chrome plated bronze ball, reinforced Teflon seals, and blow-out-proof stem rated to 600 PSI.

The valve shall be installed thru the pump panel and clearly labeled.

PLUMBING SYSTEM

All inlet and outlet lines shall be plumbed with either, stainless steel pipe, flexible polypropylene tubing or synthetic rubber hose reinforced with hi-tensile polyester braid. All hoses shall be equipped with stainless steel couplings. All stainless steel hard plumbing shall be a minimum of a schedule 10 wall thickness. Where vibration or chassis flexing may damage or loosen piping or where a coupling is required for servicing, the piping shall be equipped with Victaulic or rubber couplings. Plumbing manifold bodies shall be ductile cast iron or stainless steel. All piping lines are to be drained through a master drain valve or shall be equipped with individual drain valves. All drain lines shall be extended with a hose to drain below the chassis frame. All water carrying gauge lines shall be of flexible polypropylene tubing. All piping, hose and fittings shall have a minimum of a 500 PSI hydrodynamic pressure rating.

STAINLESS STEEL FOAM MANIFOLD

The foam manifold will be constructed of stainless steel.

PLUMBING FINISH

The plumbing shall be natural finish and shall not be painted.

APPARATUS VALVES, AKRON

The apparatus valves (unless otherwise specified) shall be Akron heavy-duty swing out 8000 series brass body with flow optimizing stainless steel ball, and dual polymer seats. The valve shall be capable of dual directional flow while incorporating a self- locking ball feature using an automatic friction lock design and specially designed flow optimizing stainless steel ball. The valve shall not require the lubrication of seats or any other internal waterway parts, and be capable of swinging out of the waterway for maintenance by the removal of six bolts. The valve shall a 10- year warranty covered by Akron Brass.

SUCTION(S), 2-1/2" LEFT PANEL

One (1) 2-1/2" swing operated ball valve(s) shall be installed on the left side pump panel plumbed to the suction side of the pump with 2-1/2" piping. The suction(s) shall be equipped with a 2-1/2" FNST chrome inlet swivel, brass inlet strainer, chrome plug with chain and 3/4" drain valve. The control handle shall be located at the valve.

A warning plate permanently affixed in close proximity of the suction inlet shall be installed stating:

"WARNING - SERIOUS INJURY OR DEATH COULD OCCUR IF INLET IS SUPPLIED BY A PRESSURIZED SOURCE WHEN THE VALVE IS CLOSED".

DISCHARGE ELBOWS

All 2-1/2" side discharge outlets shall terminate with chrome-plated 30-Degree elbows with 2-1/2" MNST threads and chrome vented caps/chains.

The caps shall automatically release pressure in the discharge outlet before the threads are completely disengaged unless the outlet and the cap are equipped with drains or bleeder valves.

DISCHARGE, FRONT BUMPER

There shall be one-(1) front discharge installed thru the gravelshield, driver's side outboard of the frame rail.
The front bumper discharge shall terminate with a 90-degree swivel elbow, 2" FNPT x 1-1/2" MNST. One-(1) 2" brass valve with 3/4" drain shall be installed on the discharge side of the pump plumbed to the front swivel with flexible high-pressure hose and victaulic stainless steel couplings tested to 1200 PSI. The front discharge shall be push/pull controlled at the pump operator's panel.
A tread plate stop shall be provided preventing the front bumper discharge swivel from incidental contact with the cab.

CROSSLAYS, 1-3/4" DOUBLE LAY

Two-(2) pre-connected crosslay compartments shall be provided above the pump module. Each crosslay bed shall accommodate 200' of 1-3/4" double jacket hose. Stainless steel nylon guide rollers shall be installed at each end with stainless steel scuff plates around the perimeter to protect the painted surface.

One-(1) 2" ball valve with 90-degree mechanical swivel shall be installed for each crosslay. The valve shall be plumbed to the crosslay with 2" high-pressure flexible hose and stainless steel couplings. The high pressure hose shall be tested to 1200 PSI. The crosslays shall be push pull controlled at the pump operator's panel.

The crosslays shall be equipped with a 3/4 quarter-turn drain valve.

A safety sign FAMA22, which warns of the need to secure hose, shall be visible to personnel at the hose storage area.

CROSSLAY COVER, HYPALON

There will be a Hypalon crosslay cover provided with the apparatus secured by twist-lock connectors along the top protecting the crosslay hose. The cover prevents hose from inadvertently deploying during normal operations meeting the current NFPA requirements.

A safety sign FAMA22, which warns of the need to secure hose, will be visible to personnel at the hose storage area.

The Hypalon end flaps will be secured at the bottom using pushpins. The cover prevents hose from inadvertently deploying during normal operations meeting the current NFPA requirements.
The cover and/or end flaps will be red in color.

DISCHARGES, 2-1/2" LEFT SIDE

There shall be two-(2) discharge outlets with a 2-1/2" valve on the left side pump panel. The outlets shall be push pull controlled from the operator's panel and terminate with 2-1/2" MNST threads.

DISCHARGES, 2-1/2" RIGHT SIDE

There will be two-(2) discharge outlets with a 2-1/2" valve on the right side pump panel. The outlets will be push pull controlled from the operator's panel and terminate with 2-1/2" MNST threads.

DISCHARGE, 4" RIGHT SIDE

There will be one-(1) discharge outlet with a 4" valve on the right side pump panel. The outlet will be hand wheel controlled from the operator's panel and terminate with 4" MNST threads.

DECK GUN PLUMBING, 3"

A 3" deck pipe shall be installed above the pump in such a manner that a monitor can be mounted and used effectively. The piping shall be installed securely so no movement develops when the line is charged. The piping shall terminate with 3" NPT threads and a 4-bolt flange for mounting a monitor. The 3" valve shall be push pull controlled from the operator’s panel.

DISCHARGE, 2-1/2" LEFT REAR

There will be one-(1) discharge outlet with a 2-1/2" valve plumbed to the left rear of the apparatus. The outlet will be push pull controlled from the operator's panel and terminate with 2-1/2" MNST adapter.

30 DEGREE ELBOW(S) - 2-1/2" FNST X 2-1/2" MNST

There will be one (1) Trident model 01.010.0 2-1/2" FNST x 2-1/2" MNST chrome plated elbow(s) supplied with the apparatus. The elbow(s) will have a 30 degree turn down.

DISCHARGE, 2-1/2" RIGHT REAR

There will be one-(1) discharge outlet with a 2-1/2" valve plumbed to the right rear of the apparatus. The outlet will be push pull controlled from the operator's panel and terminate with 2-1/2" MNST adapter.

30 DEGREE ELBOW(S) - 2-1/2" FNST X 2-1/2" MNST

There will be one (1) Trident model 01.010.0 2-1/2" FNST x 2-1/2" MNST chrome plated elbow(s) supplied with the apparatus. The elbow(s) will have a 30 degree turn down.

FOAM SYSTEM

There will be a Foam Pro 2001 fully automatic electronic direct injection foam proportioning system furnished and installed on the apparatus. The system will be capable of Class A foam concentrates and most Class B foam concentrates. The foam proportioning operation will be based on direct measurement of water flows, and remain consistent within the specified flows and pressures. System must be capable of delivering accuracy to within 5% of calibrated settings over the advertised operation range when installed according to factory standards. The system will be equipped with a digital

electronic control display suitable for installation on the pump panel. Incorporated within the control display will be a microprocessor that receives input from the system flowmeter(s), while also monitoring foam concentrate pump output. This compares values to ensure that the operator's preset is proportional to the amount of foam concentrate injected into the discharge side of the fire pump.

Paddlewheel-type flowmeter(s) will be installed in the discharges specified to be "foam capable." When the use of more than one flowmeter is required, an interface electronics module will be provided to totalize these flows and send the flow total to the microprocessor in the computer control display.

The digital computer control display will enable the pump operator to perform the following control and operation functions for the foam proportioning system:
-Provide push-button control of foam proportioning rates from 0.1% to 10.0%, in 0.1% increments
-Show current flow-per-minute of water
-Show total volume of water discharged during and after foam operations are completed
-Show total amount of foam concentrate consumed
-Simulate flow rates for manual operation
-Perform setup and diagnostic functions for the computer control microprocessor
-Flash a "low concentrate" warning when the foam concentrate tank(s) runs low
-Flash a "no concentrate" warning and shut the foam concentrate pump off, preventing damage to the pump, should the foam tank(s) empty

A 12-volt electric motor drive positive displacement foam concentrate pump, rated up to 2.5 gpm (9.5 L/min) @ 150 psi with operating pressures up to 400 psi (27.6 BAR), will be installed in a suitable, accessible location. The system will draw a maximum of 40 amps @ 12 VDC or 21 amps @ 24 VDC. A pump motor electronic driver (mounted to the base of the pump) will receive signals from the computer control display and power the 1/2 hp (0.40 Kw) electric motor directly coupled to the concentrate pump in a variable speed duty cycle to ensure that the correct proportion of concentrate preset by the pump operator is injected into the water stream.

When two types of foam concentrates are to be used, a dual tank switch over system consisting of the following options will be installed to provide rapid changeover of foam concentrate reservoirs. The digital computer control display will interface with the options listed, provide dual foam calibration, and display separate totals for each foam concentrate used.

When two types of foam concentrates are to be used, two foam concentrate tanks will be installed and piped to the foam concentrate pump via the electric dual tank valve or the manual dual tank valve. (The user will determine the tank capacities.)

Full flow check valve will be provided to prevent foam contamination of fire pump and water tank or water contamination of foam tank.

Components of the complete proportioning system will include:
-Operator control and display
-Paddlewheel flowmeter(s)
-Pump and electric motor/motor driver
-Wiring harnesses
-Low level tank switch

-Multi-Flo electronic module (if more than one flowmeter is used)
-Foam tank(s)
-Electronic dual tank valve or manual dual tank valve (if more than one tank)
-Foam injection check valve
-Main waterway check valve

System Capacities:
0.2% = 1,300 GPM
0.5% = 520 GPM
1.0% = 260 GPM
3.0% = 85 GPM

An installation and operation manual will be provided for the unit, along with one (1) year limited warranty by the manufacturer. The system will have passed environmental testing which simulates heavy use on off-road mobile apparatus. Testing will have been conducted in accordance to SAE standards.

GAUGE, FOAM LEVEL

A Fire Research TankVision Pro model WLA360-A00 tank indicator kit will be installed on the pump operator's panel. The kit will include an electronic indicator module, a pressure sensor, a 10' sensor cable and a tank vent. The indicator will show the volume of Class A foam concentrate in the tank on nine (9) easy to see super bright RGB LEDs. A wide view lens over the LEDs will provide for a viewing angle of 180 degrees. The indicator case will be waterproof, manufactured of Polycarbonate/Nylon material, and have a distinctive green label.

The program features will be accessed from the front of the indicator module. The program will support self-diagnostics capabilities, self-calibration, six (6) programmable colored light patterns to display tank volume, adjustable brightness control levels and a datalink to connect remote indicators. Low water warnings will include flashing LEDs at 1/4 tank, down chasing LEDs when the tank is almost empty, and an output for an audio alarm.

LOW TANK LEVEL SWITCH

A low tank level switch will be installed in each foam concentrate tank that supplies the foam proportioning system. The low tank level sensor will be connected to the foam proportioning system to provide protection against dry running of the foam pump. The low tank level sensor can be mounted on the side, bottom, or top of the foam concentrate tank. The low tank level sensor and electrical connections will be sealed to prevent infusion of foam concentrate into the wiring and possible short circuit of the tank level sensor.

FLOWMETER, TEE MOUNT W/COUPLING KIT

There willl be a paddle wheel style flowmeter mounted in a NPT pipe tee for mounting in a properly sized discharge line. A groove less Victaulic coupling will be provided for installation of the flowmeter. A water check valve will be installed before the flowmeter and between the water pump and the foam injection point.

OPERATING SYSTEMS INSTRUCTION PLACARD, SINGLE TANK

There will be a placard installed on the pump panel, a schematic of the Foam Pro (single tank) operating system, which has been installed.

FOAM PROPORTIONING SYSTEM TEST

NFPA 1900 PERFORMANCE REQUIREMENTS

The proportioning system will be capable of proportioning foam concentrate in accordance with the foam concentrate manufacturer's recommendation for the type of foam concentrate used in the system over the system's design range of flow and pressure. The foam proportioning systems water flow characteristics and the range of proportioning ratios will be specified.

The foam system will comply with NFPA 1900 Chapter 17.0 as it relates to the specified system.

FOAM TANK PIPING

The foam supply line will be non-collapsible. There will be a means provided to prevent water backflow in to the foam proportioning system and storage tank(s).

Either a filter or strainer provided on the foam concentrate supply side of the foam proportioning to prevent any debris that may affect the operation of the foam proportioning system from entering the system. The strainer assembly will consist of a removable straining element, housing, and retainer. The strainer assembly will allow full flow capacity of the foam supply line.

FLUSHING

Foam concentrate system flush line(s) will be provided as required by the foam system manufacturer. The design will incorporate a means to prevent water backflow into the concentrate tank or water tank during the flushing operation. Where the foam proportioning system is connected to more than one (1) foam storage tank, provisions will be made to flush all common lines to avoid contamination of dissimilar foam concentrates.

CONTROLS FOR FOAM SYSTEM

The foam proportioning system operation controls will be located at or near the pump operator's position and will be clearly labeled.

All foam-proportioning systems that require flushing will provide controls, which enable the operator to flush the system in accordance with the foam manufacturer's instructions.

Foam proportioning systems that incorporate foam concentrate metering valves will have each metering valve calibrated to indicate the rate(s) of flow of the foam concentrate proportioning available as determined by the design of the system.

Foam proportioning systems that incorporate automatic proportioning features will be equipped with controls, which enable the operator to isolate the automatic feature and operate the system in a manual mode.

NAMEPLATE, LABELS, INSTRUCTION SPECIFICATIONS

There will be a nameplate provided that is clearly marked with the identification and function of each control gauge and indicator related to the foam proportioning system.

There will be a label provided on the operator's panel that identifies the type(s) of foam concentrate(s) the system is designed to use. This label will state the minimum/maximum foam-proportioning rate at the minimum/maximum foam proportioning rated system flow and pressure.

Foam proportioning system instruction plate will be provided. This includes a minimum piping schematic of the system and basic operating instructions.

Two (2) copies of an operations and maintenance manual will be provided. These manuals will include a complete diagram of the system, along with operating instructions and details outlining all recommended maintenance procedures.

FOAM PROPORTIONING SYSTEM TESTING

The apparatus manufacturer will test the accuracy of the foam proportioning system prior to delivery of the apparatus.

If the manufacturer's rated proportioning ratio is below 3%, the foam system will proportion foam concentrate within 0% /+40% of the manufacturer's rated proportioning ratio across the manufacturer stated range of water flow and pressure.

If the manufacturer's rated proportioning ratio is above 3%, the foam system will proportion foam concentrate within 0% /+40% of the manufacturer's rated proportioning ratio or 1 percentage point, whichever is less across the manufacturer's stated range of water flow and pressure.

FOAM TANK, NUMBER 1

The foam tank will have a capacity of 30 gallons designed as an integral part of the water tank and will have a manual fill tower. The fill tower will be constructed of polypropylene and will be a minimum dimension of 8" x 8" outer perimeter. Each A pressure vacuum vent will be provided in the lid of the fill tower.

FOAM OUTLETS

Foam will be plumbed to the following outlets:
Front Bumper Discharge
No. 1 Crosslay
No. 2 Crosslay
Rear of Body Right Side
== Body - Extruded Pumper (500-1250 Gallons) - 622.001 06/06/22 ==

WATER TANK, 750 GALLONS

The tank will have a capacity of 750 U.S. gallons and will be constructed of polypropylene plastic. This material will be a non-corrosive stress relieved thermoplastic and UV stabilized for maximum protection.

The tank will be baffled in accordance with NFPA Bulletin 1900 requirements.

The baffles will have vent openings at both the top and bottom to permit movement of air and water between compartments.

A sump that will be sized dependent on the tank to pump plumbing will be provided at the bottom of the water tank. The sump will include a drain plug and the tank outlet.

The tank will have a combination vent and manual fill tower. The fill tower will be constructed of polypropylene and will be a minimum dimension of 8" x 8" outer perimeter. An overflow pipe, constructed of 4.00" schedule 40 polypropylene, will be installed approximately halfway down the fill tower and extend through the water tank and exit to the rear of the rear axle.

"L" SHAPED WATER TANK

The tank will be "L" shaped in design to allow for a low hose bed height.

WATER TANK SIZE CERTIFICATION

The manufacturer will certify the capacity of the water tank prior to the delivery of the apparatus. This capacity will be recorded on the manufacturer's record of construction and the certification will be provided when the apparatus is delivered.

GAUGE, WATER LEVEL

A Fire Research TankVision Pro model WLA300-A00 tank indicator kit will be installed on the pump operator's panel. The kit will include an electronic indicator module, a pressure sensor, and a 10' sensor cable. The indicator will show the volume of water in the tank on nine (9) easy to see super bright RGB LEDs. A wide view lens over the LEDs will provide for a viewing angle of 180 degrees. The indicator case will be waterproof, manufactured of Polycarbonate/Nylon material, and have a distinctive blue label.

The program features will be accessed from the front of the indicator module. The program will support self-diagnostics capabilities, self-calibration, six (6) programmable colored light patterns to display tank volume, adjustable brightness control levels and a datalink to connect remote indicators. Low water warnings will include flashing LEDs at 1/4 tank, down chasing LEDs when the tank is almost empty, and an output for an audio alarm.

APPARATUS BODY, 96" WIDE

The 96" wide apparatus body and sub frame shall be constructed entirely of marine grade aluminum plate and extrusions.

BODY SUBFRAME

The main body support cross member extrusions shall be 3" x 4" 6061T6 aluminum alloy, double "I" beam with a wall thickness of 7/16" (.438"). These cross members shall extend the full width of the body to support the compartment framing. The cross members shall be welded to a 3/4" (.750") x 3" solid aluminum, 6061T6 aluminum (alloy frame rail) extrusion. The frame rail extrusion shall be shaped in contour with the chassis frame rails. The frame rail extrusion shall be mounted over a 1/2" (.5") thickness, reinforced rubber cushion to isolate the aluminum sub frame from the chassis steel frame rails. The apparatus body structure shall be securely fastened to the chassis frame rails with a minimum of six-(6) 5/8" (.625") cross member OD, steel U-bolts. The main body support cross member shall have a gusset above and below each cross member. The gussets shall be constructed of 2.0" x 4.0" 6063T6 aluminum alloy extrusion with a .190" wall thickness. The gussets shall be continuously welded with 5356 aluminum alloy welding wire to add support to the body sidewalls. The main body supports and the longitudinal double "I" beam supports shall have a "C" shaped rubber tank cushion installed on the top of each member. This rubber extrusion shall conform to the shape of the double "I" beam extrusion to keep the tank cushion in place. This method is used to prevent damage to the tank.

Absolutely no pop-rivets, screws or any other hardware shall be used to hold the rubber tank cushion in place.

BODY CONSTRUCTION

The complete apparatus body structure shall be an all welded construction and be free from nuts, bolts and other fasteners. Upon completion of the weldments, the body shall be completely sanded and deburred for removal of all sharp edges.

The body framework shall be formed from beveled aluminum alloy extrusions and electrically seam welded at each joint using 5356 aluminum alloy welding wire. Body sides shall be formed from 5052 H-32 (marine grade) smooth aluminum plates. The horizontal surfaces above the compartment tops shall be constructed from aluminum tread plate.

The horizontal and vertical frame member extrusions shall be 2.0" x 4.0" with a .190" wall thickness. The extrusion shall be made from 6063T6 aluminum alloy. This extrusion shall have .190" outside radius corners. The longitudinal frame member, below the lower compartments shall be a 2.0" x 4.0" 6063T6 aluminum alloy extrusion with .190" radius corners. Each body corner shall be a 3.5" x 9-3/4" 6063T6 extruded aluminum section with .210" wall thickness, and shall be welded as an integral part of the body. This extrusion shall have a 1" corner radius.

COMPARTMENT CONSTRUCTION

The compartment sidewalls shall be of one-piece construction. The walls shall be formed from 3/16" (.1875") 5052 H-32 (marine grade) smooth aluminum plate. All compartment floors shall be formed from 3/16" (.1875") aluminum tread plate. The floors shall be welded in place with a continuous weld all around the perimeter to insure maximum strength.

The compartment seams shall be sealed with permanent pliable silicone caulking.

Each compartment shall be vented through a 3" wide x 15" high louver that is machined stamped in a panel located in each body corner extrusion. The panel shall be removable to provide access to service wiring and other mounted components.

COMPARTMENT TOPS/CATWALK

The external compartment tops shall be constructed of 1/8" (.125") aluminum tread plate. The tops shall have a formed edge, which serves as a drip rail for the compartments below. The compartment tops shall be secured with stainless steel screws to allow for ease of removal for access to the bodies wiring harnesses.

WHEEL WELL PANELS

The wheel well shall be constructed from 2" x 4" x .190" wall thickness. The extrusion shall be made from 6063T6 aluminum alloy and have .190" outside radius corners. The extrusion shall be slotted the full length to permit an internal fit of 3/16" (.187") painted aluminum panels. The wheel well liners shall be constructed of 3003 H-14 smooth aluminum plates. They shall be bolted in place for ease of maintenance.

A deflection shield shall be mounted to the body sub frame to keep road debris from entering the water tank area.

FENDERETTES, POLISHED STAINLESS STEEL

The body fenderettes will be bright polished stainless steel securely fastened to the body wheel wells on each side.

HOSEBED

H7195 Cinder Pumper Retail

The hose bed sides shall be constructed of 3/16" (.1875") 5052 H-32 (marine grade) smooth aluminum plate welded to the extruded framework. There shall be a 3" x 3.5" 6063T6 aluminum extrusion with .190" wall thickness running the entire length of the hose bed at the top for structural rigidity. The hose bed decking shall be constructed from anodized aluminum extrusions. The extrusions shall be 3/4" (.750") x 8.125" and have 3/4" (.750") x 3.00" hat channel attached to the underside to form a one-piece grid. The entire deck shall be removable, in one piece, to allow ease of serviceability to the tank. The hose bed shall include an extrusion across the front and rear of the compartment for the installation of adjustable hose bed dividers.

The fire apparatus hose body shall be 67-1/2" wide.

A safety sign FAMA22, which warns of the need to secure hose, shall be visible to personnel at the hose storage area.

COMPARTMENTS, LEFT SIDE

L1
There shall be one-(1) left front compartment installed ahead of the rear axle. The interior dimensions will be approximately 36" wide x 73" high x 25" deep.

L2
There shall be one-(1) compartment installed above the wheel well. The interior dimensions will be approximately 58" wide x 41" high x 25" deep.

L3
There shall be one-(1) left rear compartment installed behind the rear axle. The interior dimensions will be approximately 44" wide x 73" high x transverse in the lower section and 25" deep in the upper section.

COMPARTMENTS, RIGHT SIDE

R1
There will be one-(1) right front compartment installed ahead of the rear axle. The interior dimensions will be approximately 36" wide x 64" high x 25" deep in the lower section and 12" deep in the upper section.

R2
There will be one-(1) compartment installed above the wheel well. The interior dimensions will be approximately 58" wide x 32" high x 12" deep.

R3
There will be one-(1) right rear compartment installed behind the rear axle. The interior dimensions will be approximately 44" wide x 64" high x transverse in the lower section and 12" deep in the upper section.

R1
There will be one-(1) right front compartment installed ahead of the rear axle. The interior dimensions will be approximately 36" wide x 73" high x 25" deep in the lower section and 12" deep in the upper section.

H7195 Cinder Pumper Retail

R2
There will be one-(1) compartment installed above the wheel well. The interior dimensions will be approximately 58" wide x 41" high x 12" deep.

R3
There will be one-(1) right rear compartment installed behind the rear axle. The interior dimensions will be approximately 44" wide x 73" high x transverse in the lower section and 12" deep in the upper section.

COMPARTMENT, CENTER REAR

B1
There shall be one-(1) compartment installed at the center rear of the apparatus. The compartment shall have an interior dimension of approximately 46" wide x 28" high x 31" deep.

COMPARTMENT DOOR(S), HINGED

The specified compartments will have doors constructed entirely from 5052-H32 smooth aluminum plate using a box pan configuration. The outer panel shall be constructed from 3/16" (.1875") smooth aluminum plate and the inner pan stitch welded in place from 1/8" (.125") smooth aluminum plate.

There shall be a 1/4" (.250") hole installed in the lower corners of the inside door pans for drainage. The doors shall have a closed cell neoprene rubber gasket installed around the perimeter of the door to remove water.

Exterior door latches shall incorporate a polished D-paddle handle with rotary style latch. For ease of operation, the D-handle opening shall be large enough to accommodate a gloved hand. The D-paddle latching design shall be subjected to corrosion, water infiltration, and cycle testing to 35,000 cycles. Double doors shall utilize concealed rotary latches on the secondary door, actuated by a recessed stainless steel paddle handle. The door design shall not impede into the compartment opening when in the open position. The watertight door seal shall exceed the current KKK-1822 water infiltration standards. The doors shall be securely fastened to the apparatus body with full-length stainless steel piano hinges using 1/4-20 stainless bolts and locking nuts. The hinges shall be slotted to allow for adjustments.

Absolutely no self-tapping screws or pop rivets shall be acceptable to mount the door mechanisms or slam latch assemblies.

The hinged door will be located on compartment B1.

COMPARTMENT DOOR(S)

A satin finish roll-up door will be installed on the specified compartment(s).

There shall be an aluminum drip rail above each compartment door with a built in replaceable wiper seal.

There will be a ROM satin finish roll up door installed on compartment L1, compartment L2, compartment L3, compartment

R1, compartment R2 and compartment R3.

REAR BODY CONSTRUCTION, FLAT BACK DESIGN

The rear of the apparatus will be flat back design. No beavertails will be installed on the unit.

VERTICAL LOAD TEST, APPARATUS BODY

The fire body shall exceed a vertical load testing. The vertical load test to the fire body shall follow the same strict and detailed requirements of the Economic Commission for Europe Structural Standard, ECE-29R as applied to the cab.

The fire body shall be placed under a vertical load test to show structural integrity. There shall be 65,979 lbs. (29.53 metric tons) applied to the fire body. There shall be no structure failures to the body and body compartments.

A complete photographic, video, data, and dimensional record of these tests shall be available and placed on record for customer evaluations.

FULL DEPTH COMPARTMENT(S)

The specified compartment(s) of the apparatus shall have full-depth configurations that extend the interior depth of the compartment to match to lower compartment depths. The exact dimensions and storage capacity is completely described in the "Compartment" section of the specification.

The left side compartments will be full depth.

COMPARTMENT, LADDER STORAGE

There shall be one-(1) equipment storage compartment installed beside the tank on the right side constructed of 1/8" (.125) smooth aluminum plate for the storing of NFPA required equipment. Individual internal compartments shall house one-(1) 24' extension ladder, one-(1) 14' roof ladder, one-(1) 10' folding ladder, and two-(2) pike poles with silencing pads made from Polypropylene installed on each compartment floor to assist in the loading and unloading of the required equipment.

The compartment shall have vertically hinged door constructed from 1/8" (.125) smooth aluminum plate with stainless steel piano hinge and paddle latch door open mechanism. The door shall be installed utilizing stainless steel nuts and bolts, other fastening device such as self-tapping screws or pop rivets shall not be acceptable.

STORAGE TUBES, PIKE POLE

Two-(2) aluminum tubes shall be installed on the apparatus for pike pole storage. One-(1) end shall be notched to allow the poles to be locked in place.

The tubes will be located in the ladder tunnel.

WHEEL WELL AIR BOTTLE COMPARTMENT, LEFT FRONT

There shall be an air bottle compartment located in the left front body wheel well to house two-(2) spare SCBA cylinders.

The compartment shall be constructed of high-density polyethylene to provide scuff protection. The compartment shall be vented to facilitate moisture drainage. The compartment door shall be brushed stainless steel with a push button trigger latch.

WHEEL WELL AIR BOTTLE COMPARTMENT, LEFT REAR

There shall be an air bottle compartment located in the left rear body wheel well to house two-(2) spare SCBA cylinders. The compartment shall be constructed of high-density polyethylene to provide scuff protection. The compartment shall be vented to facilitate moisture drainage. The compartment door shall be brushed stainless steel with a push button trigger latch.

WHEEL WELL AIR BOTTLE COMPARTMENT, RIGHT FRONT

There shall be an air bottle compartment located in the right front body wheel well to house two-(2) spare SCBA cylinders. The compartment shall be constructed of high-density polyethylene to provide scuff protection. The compartment shall be vented to facilitate moisture drainage. The compartment door shall be brushed stainless steel with a push button trigger latch.

WHEEL WELL AIR BOTTLE COMPARTMENT, RIGHT REAR

There shall be an air bottle compartment located in the right rear body wheel well to house two-(2) spare SCBA cylinders. The compartment shall be constructed of high-density polyethylene to provide scuff protection. The compartment shall be vented to facilitate moisture drainage. The compartment door shall be brushed stainless steel with a push button trigger latch.

BODY TRIM

The standard body trim shall include the following:

There shall be drip rail installed over the compartment door openings.

A drip rail shall be located over each compartment door. This drip rail shall form a lip over the exterior door pans to prevent water from running into a compartment.

The vertical rear face of the body shall be covered with smooth aluminum plate.

Two-(2) handrails shall be located on the rear of the apparatus, one-(1) handrail per side. Each handrail shall be constructed of 1-1/4" knurled aluminum. The handrails shall be mounted with chrome plated end stanchions. Each handrail shall be sufficient in length to meet all standard requirements.
Two-(2) stanchions shall be mounted at the rear of the apparatus hose bed, one-(1) each side. The stanchions shall be 11" long x 3-3/4" wide. Stainless steel scuff plates shall be installed in the hose bed area to prevent deploying hose from damaged on stanchion supports. The stanchions shall provide mounting positions for the Zone C warning lights and additional hose bed lighting. All wiring for the upper rear lighting shall be concealed inside the stanchions.

The stanchions will be lowered so that the top of the warning beacons are even with the hose bed sides.

FUEL FILL, RECESSED WITH DOOR

There shall be a recessed fuel fill assembly with a non-locking door mounted on the left side of the apparatus body. The fuel fill assembly shall be equipped with a fuel fill cap, retention ring and hinged door. The assembly shall be properly labeled "DIESEL FUEL ONLY".

MUD FLAPS, REAR

The rear axle mud flaps shall be constructed from hard black rubber and installed at the rear of the body fenders.

RUBRAIL

There shall be an aluminum rub rail installed on both sides of the lower body compartments. The rub rail shall be constructed from "C" channel extrusion. The aluminum rub rail shall be bolted in place with stainless steel bolts, and spaced from the fire body to provide body protection. The solid rub rail shall serve as protection to the side doors when encountering close objects. Tread plate rub rails or welded on shall not be acceptable.

REAR STEP

The 12" rear step will be constructed of 3/16" (.1875") aluminum tread plate. The rear step will be flanged down 2.50" and in 1.00" to maximize strength and rigidity. The rear step will be bolted on for removal or replacement.

All running board and step surfaces will comply with NFPA 1900.

CHROME FOLDING STEP(S), FRONT OF BODY

There shall be two (2) large chrome-folding step(s) with a minimum surface area of thirty-five (35) square inches. The step(s) shall be mounted on the front face of the forward compartment as directed by the customer.

There shall be an LED light installed above and below each step.

There will be one-(1) step located on each side of the apparatus on the front compartment faces.

CHROME FOLDING STEP(S), REAR OF BODY

There shall be three (3) rear chrome folding step(s) installed on the rear of the body. Each step shall have a minimum of thirty-five (35) square inches of surface area.

There shall be an LED light installed above and below each step.

TOW EYES, REAR

Two-(2) 1" thick rear tow eyes constructed of A-36 steel shall be mounted below the frame at the rear of the vehicle. The tow eyes shall be attached to steel weldments that are mounted to the apparatus. The eyes shall have a minimum dimension of three-(3) inches. The tow eyes shall be used for towing, not lifting the vehicle.

HANDRAIL, BELOW HOSE BED

There shall be an intermediate handrail installed on the apparatus below the hose bed. The handrail shall be constructed of 1-1/4" knurled aluminum. The handrail shall be mounted with chrome plated end stanchions.

HANDRAIL(S), FRONT OF BODY

There shall be two (2) 1-1/4" knurled aluminum handrails installed on the front face of the compartments. They shall be approximately 12" in length. The handrail(s) shall have chrome plated end stanchions.

The steps will be mounted at final inspection.

HOSE BED DIVIDER(S)

Two (2) hose bed divider(s) shall be manufactured from 1/4" (.250") smooth aluminum plate with an extruded aluminum base welded to the bottom. The divider shall have an extruded track to slide in to allow the hose bed to adjust for different hose capacities. One end of the divider shall have a 3" radius corner. The divider shall be sanded to prevent damage to hose.

HOSE BED COVER

The cover and/or end flaps shall be black in color.

HOSE BED CAPACITY

The hose bed shall have the capacity to hold the following (left to right):

600' of 1-3/4" Double Jacket Fire Hose
1500' of 5" Large Diameter Supply Hose
600' of 2-1/2" Double Jacket Fire Hose

A safety sign FAMA22, which warns of the need to secure hose, shall be visible to personnel at the hose storage area.

== Body Components - Pumpers - 622.001 06/06/22 ==
== Elec. Components - Pumper Custom - 622.001 06/06/22 ==

ELECTRICAL SYSTEM, BODY

The body electrical system shall be designed as an integrated electrical package specifically engineered for fire apparatus application. The integrated electrical system shall interface the body and chassis through an engineered system.

All body electrical equipment installed shall conform to current automotive electrical system standard, the latest Federal DOT standards, and the requirements of the applicable NFPA Apparatus Standard. Twisted pair shielded wire shall be provided within the electrical system for noise reduction.

The wiring harness shall conform to SAE J-1128 with GXL temperature properties. All exposed wiring shall be run in loom with a minimum 289 ºF rating. All wiring looms shall be properly supported and attached to body members along the entire run. All wiring shall be mounted as to provide protection from water and heat. All connections shall be crimp type with heat shrink tubing with insulated shanks to resist moisture and foreign debris such as grease and road grime. Weather resistant connectors shall be provided throughout to ensure the integrity of the electrical system. Gold contacts shall be used where required for superior connectivity and improved performance. All wiring looms shall be properly

supported and attached along the entire run. At any point where wire or looms must pass through metal, rubber grommets shall be installed to protect the wire from abrasion.

Wiring shall be individually and permanently numbered, function and color-coded using an indexing numbering system in which all circuits are categorized by function and shall be permanently marked every three (3) inches on the insulation to allow for easy identification.

All internal wire end terminals, including locking bulkhead connectors, shall be mechanically affixed to the wire ends by machine terminal crimping presses. No hand-crimped terminals shall be acceptable.

All internal splices shall be ultrasonically welded connections - no butt style connections shall be acceptable. All internal wiring shall be of the high temperature GXL type wire and shall be protected by wiring duct wherever possible.

The body shall have an in-vehicle networking system, to provide real time or current state diagnostic capability and reduce troubleshooting or down time.

An electrical harness quick disconnect shall be provided to facilitate removal of the body in the future. All circuit protection shall be integral of control modules. There shall not be automatic reset circuit breakers located in the body main harnessing and distribution system.

The system shall have the capability of delivering multiple signals via a data bus, utilizing specifications set forth by SAE J1939.

The body includes strategically located solid-state modules within the body. The modules are for the body lighting and controls.

The system shall consist of all solid-state components contained inside sealed aluminum extrusions and/or weatherproof Deutsch enclosures referred to as nodes. The system shall also incorporate, as needed, miniature nodes. The nodes shall not have special mounting requirements.

The system, at a minimum, shall be capable of performing the following functions:
-Load management and sequencing
-Switch loads
-Receive digital and analog signals
-Perform and report diagnostics
-Continuously report vehicle status
-System is expandable
-Power distribution outputs
-Switch input capability
-Solid state circuitry
-Self-contained LED diagnostic indicators
-PWR for input power status (red)
-COM for communication status (green)
-The complete body electrical system shall be 100% documented and contain independent circuit diagrams with point to point wiring information, as shall as a general component diagram be included in the apparatus manua

12-VOLT TESTING

The apparatus low voltage system shall be tested and certified. A copy of certification shall be provided to the purchaser with the apparatus.

Reserve Capacity Test
The unit shall be run until all engines, engine compartment temperatures are stabilized and the battery system is fully charged. The engine shall be shut off and the minimum continuous electrical load be activated for ten-(10) minutes. All electrical loads shall be shutoff after ten-(10) minutes and the battery system shall then be capable of restarting the engine.

Alternator Performance Test at Idle
Minimum continuous electrical loads shall be activated while the unit is at idle speed.

Alternator Performance Test at Full Load
The total continuous electrical load shall be activated with the engine running up to the manufacturer's governed speed. The test duration shall be a minimum of two-(2) hours. Activation of the load management system shall be permitted during the test. If however, an alarm is sounded by excessive battery discharge as detected by the system or a system voltage of less than 11.8 volts DC for a 12-volt nominal system for more than 120 seconds, shall be considered a test failure.

Low Voltage Alarm Test
The engine shall be shut off and the total continuous electrical load shall be activated and continue to be applied until the excessive battery discharge alarm activates. The test shall be considered a failure if the alarm has not sounded within 140 seconds after the voltage drops to 11.8 volts.

WIRING PROTECTION

All 12-volt wiring shall be run in high temperature, rated at a minimum of 275º F, split loom for easy access to wires when trouble shooting.

EMI/RFI PROTECTION

The apparatus shall be manufactured to incorporate the latest designs in the electrical system with components that are state of the art to insure electromagnetic interference (EMI) and radio frequency interference (RFI) emissions are suppressed at the source.

The apparatus shall have the ability to operate in typical fire and rescue situations with no adverse effects from EMI and/or RFI.

The apparatus shall utilize components that are fully protected and wiring that utilizes shielding and loop backgrounds where required to control EMI/RFI susceptibility. The apparatus shall be bonded through ground straps. Relays and solenoids that are suspect to generating spurious electromagnetic radiation are diode and/or resistor protected to prevent transient voltage spikes.

In order to prevent the radio frequency interference completely the purchaser shall be requested to provide a listing of the type, power output, and frequencies of all radio and bio medical equipment that is proposed to be used on the apparatus.

LIGHT(S), LED COMPARTMENT

H7195 Cinder Pumper Retail

Fourteen (14) Amdor Luma Bar LED surface mount light(s) shall be installed as specified by the customer.

There will be two-(2) lights installed in each compartment.

LIGHT(S), LED COMPARTMENT

One (1) On Scene Solutions Access Series LED surface mount light(s) shall be installed as specified by the customer. Each light produces 400 lumens if light per 18" length.

The light stick shall be waterproof and rated at 100,000 hours of service. Each light stick shall be provided with a 5 year free replacement warranty.

The light will be located on the front inside wall of the hose bed.

The light will be wired to the WORK LIGHT switch in the dash panel.

GUARD(S), COMPARTMENT LIGHT

There shall be one (1) guards provided to protect the specified compartment light(s). The guards shall be fabricated from stainless steel.

The guard will be installed over the hose bed light.

DOOR AJAR SWITCHES

All apparatus body doors shall be provided with an auto door switch. These switches shall operate the compartment interior lights and activate the door ajar indicator on each side of apparatus body when the door is opened. There shall be a red door ajar light mounted in the cab, in view of the driver to indicate an unsecured door. There shall be a buzzer mounted in the cab that shall alert the driver.

LIGHTBAR, 72" WHELEN FREEDOM IV

A Whelen Edge Ultra Freedom IV Linear Super-LED LC Series 72" Lightbar model F4N7QLED shall be provided. The F4N7QLED Lightbar shall incorporate an anodized extruded heavy duty aluminum base and cover chassis with two front red corner modules with two red end cap modules, two interior white modules and two interior red modules.

The Lightbar shall be controlled in the following manner:

Calling for Right of Way - All Positions
Blocking Right of Way - Clear shall not be Active

The lights shall be activated by a single emergency light switch located on the master light switch panel in the cab.

The Lightbar shall meet NFPA 1901 edition as configured.

LIGHTS, ZONE C UPPER

Two-(2) Whelen model B6MMRRP LED lights shall be installed, one-(1) each side on the upper rear outer corners of the apparatus. The combination tailboard light shall incorporate a L31 series beacon and a 700 series warning light in a polished aluminum housing. The high profile beacon shall incorporate 32 red Super-LEDs, a red optic hard coated polycarbonate lens, and a metalized reflector with clear optic collimators. The hard coated lens shall provide extended life/luster protection against UV and chemical stresses. The four conformal coated PC boards shall provide additional protection against environmental elements. The high profile beacon shall include 28 Scan-Lock™ patterns including four simulated rotating patterns and synchronized features.

The lower level warning light shall incorporate eight red Super-LEDs, a red optic hard coated polycarbonate lens, and utilize a metalized reflector with integrated TIR hybrid optics for maximum output. The hard coated lens shall provide extended life/luster protection against UV and chemical stresses. The conformal coated PC board shall provide additional protection against environmental elements. The self-contained warning light shall have 14 Scan-Lock flash patterns including steady burn and hi/low power.

The L31 dome lens shall be sealed to a die cast aluminum base with an “O” ring gasket assembly. The 700 series warning light lens shall be fitted with foam in place gasket assembly to the die cast aluminum base to provide additional protection against environmental elements. The solid state beacon light shall be vibration resistant. An installation kit including mounting hardware shall be provided for surface mounting. The B6MMRRP will contain a 12” non-terminated pigtail. The tailboard light will meet NFPA zone C upper requirements when used as a pair and is covered by a five year factory warranty.

There will be one-(1) light located on each side of the apparatus on the the upper stanchions.

LIGHTS, ZONE B/D FRONT LOWER

Two-(2) Whelen TIR6 Series Super-LED model 50R03ZRR lights shall be installed, one-(1) each side forward portion of the apparatus. The warning lights shall incorporate red Linear Super-LEDs, a red optic hard coated polycarbonate lens. The surface mount module includes a chrome flange and hardware for horizontal mounting.

There will be one-(1) light located on each side of the apparatus on the front bumper ends.

LIGHTS, ZONE B/D MIDSHIP LOWER

Two-(2) Whelen TIR6 Series Super-LED model 50R03ZRR lights shall be installed, one-(1) each side midship of the apparatus. The warning lights shall incorporate red Linear Super-LEDs, a red optic hard coated polycarbonate lens. The surface mount module includes a chrome flange and hardware for horizontal mounting.

There will be one-(1) light located on each side of the apparatus in the body wheel well area.

LIGHTS, ZONE B/D REAR LOWER

Two-(2) Whelen LINZ6 Series Super-LED model LINZ6R lights shall be installed, one-(1) each side rearward portion of the apparatus. The warning light shall incorporate six red Super-LEDs, a clear non-optic hard coated polycarbonate lens, clear optic collimator and utilize a metalized reflector for maximum output. The hard coated lens shall provide extended

life/luster protection against UV and chemical stresses. The encapsulated lens/reflector assembly and conformal coated PC board shall provide additional protection against environmental elements. The solid state warning lights shall be vibration resistant. The self-contained flashing light shall have 69 Scan-Lock flash patterns including synchronize feature and steady burn. The warning light is covered by a five year factory warranty. The surface mount module includes a black flange and hardware for horizontal mounting.

There will be one-(1) light located on each side of the apparatus below compartments L3 / R3.

LIGHTS, ZONE C LOWER

Two-(2) Whelen 600 Series Super-LED model 60R02FRR shall be installed, one-(1) each side on the lower rear of the apparatus. The warning light shall incorporate red Linear Super-LEDs, a red optic hard coated polycarbonate lens, and utilize a metalized reflector with integrated TIR hybrid optics for maximum output. The hard coated lens shall provide extended life/luster protection against UV and chemical stresses. The encapsulated lens/reflector assembly and conformal coated PC board shall provide additional protection against environmental elements. The solid state warning lights shall be vibration resistant. The self-contained flashing light shall have 14 Scan-Lock flash patterns including synchronize feature and steady burn.The warning light is covered by a five year factory warranty.

There will be one-(1) light located on each side of the apparatus in the rear tail light housings.

STOP, TURN AND BACK-UP LIGHTS

The stop, turn and backup lights will be Whelen 600 Series individual LED fixtures.

HOUSING, REAR TAIL LIGHT ASSEMBLY

The fixtures shall be mounted on each rear face of the body in a model CAST4, four-(4) light head cast aluminum housing.

LIGHT, REAR DIRECTIONAL

A Whelen Traffic Advisor model TAL65 will be provided. The traffic advisor will incorporate a rectangular extruded black powder coated aluminum chassis with six amber 5mm series LED lights with waterproof connectors. The 5mm series lights will be installed with an amber non-optic hard coated polycarbonate lens. The 5mm series lights will incorporate 40 amber 5mm LEDs. The hard coated lens will provide extended life/luster protection against UV and chemical stresses. The encapsulated coated PC board and foam in place gasket will provide will provide additional protection against environmental elements. The 5mm lights are installed with waterproof connectors.

The solid state traffic advisor will be vibration resistant. The traffic advisor will include model TACTL5 control head that includes remote flash control. TACTL5 will have four programmable directional sequence flash patterns of left, right, split, The traffic advisor will include model TACTL5 control head that includes remote flash control. The TACTL5 will have four programmable directional sequence flash patterns of left, right, split, and flash. The LED display on the control head will replicate the traffic advisor directional sequence. The traffic advisor control head will have a rear panel dip switch for the ability to set eight additional Scan-Lock™ flash patterns. The TACTL5 will contain a 10 amp external fuse for reverse polarity protection. The TACTL5 will include a bail strap mounting kit. The traffic advisor will contain a 15’ 9/C 14/18 AWG interconnecting cable with quick disconnect feature.

The control head will be located on top of the driver's dash panel per the dash layouts.

The rear directional light will be surface mounted to the body.

CLEARANCE LIGHTS AND REFLECTORS

Clearance lights and reflectors shall be LED lights, which include two-(2) red marker lights, four-(4) red rectangular reflectors, two-(2) amber rectangular reflectors and one-(1) red three light cluster recessed in the rear step.

LIGHT(S), UNDERBODY

Five (5) Luma Bar H20 20" LED underbody "Ground Effect" light(s) shall be installed at a location to be determined by the Fire Department. The underbody light(s) shall illuminate the ground beneath the apparatus.

The lights shall be controlled by a switch in the cab.

There will be one-(1) light located below left pump panel running board, compartment L3, compartment R1, compartment R3 and front bumper.

LIGHT(S), UNDERBODY

One (1) Luma Bar H20 40" LED underbody "Ground Effect" light(s) shall be installed at a location to be determined by the Fire Department. The underbody light(s) shall illuminate the ground beneath the apparatus.

The lights shall be controlled by a switch in the cab.

The light will be centered below the rear step.

LIGHT, LICENSE PLATE

A Whelen OS Series LED model OACOEDCR shall be provided at the rear of the apparatus to illuminate the license plate. The steady burn illumination light shall incorporate three clear LED and a clear non-optic hard coated polycarbonate lens. The hard coated lens shall provide extended life/luster protection against UV and chemical stresses. The encapsulated assembly shall provide protection against environmental elements. The solid state illumination light shall be vibration resistant. An installation kit including mounting hardware, neoprene gasket and 45 degree angle chrome housing shall be provided for surface mounting. The light will contain a 12" non-terminated pigtail. The illumination light meets SAE J592 requirements and is covered by a five year factory warranty.

12-VOLT FUSE BLOCK(S)

There will be two (2) Blue Sea fuse block(s) 5025 installed in a location determined by the customer. The unit will include a six-(6) 12 volt constant power supply ports and grounding buss with easily changeable fuses. The unit will have a 100 amp total operating range.

There will be a fuse block located on the upper front side wall of compartment L3 and compartment R3.

LIGHTS, 12-VOLT SURFACE MOUNT SCENE

H7195 Cinder Pumper Retail

One (1) pair of Whelen 600 Series Model 6SC0ENZR 12 diode, 8-32 degree scene lights shall be provided and installed on the apparatus. The lights shall have a linear designed Super LED light head with a four screw mounting assembly and chrome plated trim ring flange.

The scene lights shall be controlled by switch located in the cab.

There will be one-(1) light installed on each side of the apparatus on the upper rear of the unit.

The lights will be controlled by a switch in the driver's overhead dash panel per the dash layouts.

LIGHTS, 12-VOLT SURFACE MOUNT SCENE

One (1) pair of Whelen 900 Series Model 9SC0ENZR super LED scene lights will be provided and installed on the apparatus. The steady burn scene light will incorporate Linear Super-LED® and Smart LED® technology. The Whelen 900 Series Super-LED® model # 9SC0ENZR will be provided. The steady burn scene light will incorporate twenty four clear Super-LEDs, a clear gradient optic hard coated polycarbonate lens, and utilize a metal reflector for maximum output. The hard coated lens will provide extended life/luster protection against UV and chemical stresses. The conformal coated PC board and sealed lens/reflector assembly will provide additional protection against environmental elements. The solid state scene light will be vibration resistant. The 9SC0ENZR is certified to meet KKK 1822F requirements and AMD 024 standards.

The scene lights will be controlled by switch located in the cab.

There will be one-(1) light located on each side of the apparatus directly behind the cab front doors in the raised roof section.

The lights will be controlled by a switches in the driver's overhead dash panel per the dash layouts.

ADDITIONAL SWITCH(ES), SCENE LIGHTS

Besides the cab mounted switch(es) for the scene lights there will be six (6) additional switches install on the apparatus to control the scene lights.

The additional switches will be located in the overhead panels per the dash layouts.

The additional switches will control the following:
LEFT FRONT TELE-LIGHT
RIGHT FRONT TELE-LIGHT
FRONT SCENE
LEFT SCENE
RIGHT SCENE
REAR SCENE

ADDITIONAL SCENE LIGHT WIRING, UPPER REAR MOUNTED

The upper rear body mounted scene lights shall also be wired to come one when the transmission is placed into reverse.

LIGHT(S), 12-VOLT BROW MOUNT

One (1) HiViz LEDs FireTech brow light, Model FT-B-72-ML-W will be provided. The light will be low in profile with a mounting bracket allowing installation to the top edge of the cab.

Length: 75"
LEDS: 59
Lumens: 28,512 (each)

The scene light(s) will be powered by the 12-volt chassis electrical system.

The light(s) will be warranted against defects for the service life of the apparatus.

LIGHTS, TELESCOPING BACK OF CAB

There will be two-(2) telescoping lights will be installed, one-(1) each side, on back of the cab.
Two (2) Whelen Pioneer Plus Model PFH1 light head will be provided. The 80 watt +12v DC Pioneer light head will incorporate Super-LED® floodlight installed in a die-cast white powder coated aluminum housing. The PFH1 configuration will consist of 18 white Super-LEDs. The PFH1 will produce 8,875 useable Lumens. The assembly will use a collimator/metalized redux flood light reflector assembly with Proclera™ silicone optics and a clear non-optic polycarbonate lens. The lens/reflector assembly will utilize a liquid injected molded silicone gasket to be resistant to water, moisture, dust, and other environmental conditions. The hard coated lens will provide extended life/luster protection against UV and chemical stresses. The PFH1 will be will be vibration resistant. The Pioneer™ PC boards will be conformal coated for additional protection. Two breathable membrane patches will be installed to the housing to maintain a consistent internal pressure. The PFH1 will have extended LED operation with low current consumption and low operating temperature. The PFH1 will be furnished with a 20’ 2/C 16GA cable. The PFH1 is covered by a five year factory warranty.

A Whelen 3000 series Pole System will be provided. The telescopic side mount pole assembly will incorporate 57" internal aluminum alloy pole with an outer diameter of 1.125" and an inner diameter of 0.875". The 3000 series pole will also include a 12" bottom mount silver aluminum alloy collar/handle assembly. The outer body will meet NFPA 1900 “15.8” access hand rails and hand held guidelines. The pole will slide on a Teflon “O” ring and collar to reduce friction during movement. The upper body will contain a polycarbonate sleeve to prevent water, moisture, dust, and other environmental conditions from entering the interior of the pole assembly. The aluminum side mount brackets will be powder coated silver. The side mount brackets will contain two types of mounting gaskets; 1/16” for painted surfaces and 1/8” for diamond plated surfaces. Both gaskets will be a 40 durometer neoprene black rubber with PSA on one side. All mounting hardware will be stainless steel. The internal coil cord cable will be UL© listed and have a Heyco® liquid tight strain relief. All aluminum pole components will be clear anodized to eliminate yellowing and corrosion.
The telescoping lights will be controlled by a switch located on the light head.

== Paint - SM Extruded - 622.001 06/06/22 ==

PAINT FINISH, CAB/BODY

The apparatus cab/body shall be painted with AkzoNobel Sikkens brand paint. The paint process shall meet or exceed current state regulations concerning paint operations. Pollution control shall include measures to protect the atmosphere,

water, and soil. Contractor shall, upon demand, provide evidence that the manufacturing facility is in compliance with State EPA rules and regulations.

The body exterior shall have no mounted components prior to painting to assure full coverage of metal treatments and paint to the exterior surfaces of the body. Any vertically or horizontally hinged smooth-plate compartment doors shall be painted separately to assure proper paint coverage on body, door jambs and door edges.

Paint process shall feature AkzoNobel Sikkens high solid BTLV products and be performed in the following steps: Corrosion Protection - all aluminum surfaces shall be treated with the AkzoNobel Sikkens LV 260 Epoxy coating to provide superior corrosion resistance and excellent adhesion of the base coat.

AkzoNobel Sikkens Sealer/Primer BTLV - acrylic urethane sealer/primer shall be applied to guarantee excellent gloss hold-out, chip resistance and a uniform base color.

AkzoNobel Sikkens High Solid BTLV650 (Base coat) - a lead-free, chromate-free high solid polyurethane base coat shall be applied, providing excellent coverage and durability. A minimum of two-(2) coats shall be applied.

AkzoNobel Sikkens High Solid BTLV650 (Clear coat) - high solid LV clear coat shall be applied as the final step in order to ensure full gloss and color retention and durability. A minimum of two-(2) coats shall be applied.

Any location where aluminum is penetrated after painting, for the purpose of mounting steps, hand rails, doors, lights, or other specified components shall be treated at the point of penetration with a corrosion inhibiting pre-treatment (ECK Corrosion Control). The pre-treatment shall be applied to the aluminum sheet metal or aluminum extrusions in all locations where the aluminum has been penetrated. All hardware used in mounting steps, hand rails, doors, lights, or other specified components shall be individually treated with the corrosion inhibiting pre-treatment.

After the paint process is complete, the gloss rating of the unit shall be tested with a 60 degree gloss meter. Coating thickness shall be measured with a digital MIL gauge and the orange peel with a digital wave scan device.

PAINT COLOR/CODE

The paint color/code will be red FBCH 992103.

INTERIOR COMPARTMENT FINISH

The interior of the body compartments shall be a natural finish.

NFPA Striping - Customer / Dealer Supplied

STRIPE, REAR CHEVRON

A minimum of fifty percent of the rear vertical surface of the unit shall be overlaid with a reflective material, installed in an alternating "Chevron" pattern (sloping down and away from the centerline) at a 45-degree angle. Each stripe shall be 6” wide and the colors of stripping shall be in compliance, with the current edition of NFPA 1901.
The Chevron striping shall be 3M red and lime green.

REFLECTIVE MATERIAL, DESIGNATED WALKING SURFACES

1" wide yellow perimeter marking consisting of individual Reflexite diamonds shall be applied to indicate the outside edge of designated standing and walking areas above 48" from the ground in compliance with 2016 NFPA 1901. Steps, ladders and areas with a railing or structure at least 12" high are excluded from this requirement.

== Warranty / Manuals - Pumpers Custom - 622.001 06/06/22 ==

WARRANTY, BODY MATERIAL & WORKMANSHIP

The purchaser shall receive a general two-(2) year or 36,000 miles limited warranty in accordance with, and subject to, warranty certificate RFW0002. The warranty certificate is incorporated by reference into this proposal, and included with this proposal or available upon request.

WARRANTY, CUSTOM CHASSIS MATERIAL & WORKMANSHIP

The purchaser shall receive a custom chassis two-(2) years or 36,000 Miles limited warranty in accordance with, and subject to, warranty certificate RFW0102. The warranty certificate is incorporated by reference into this proposal, and included with this proposal or available upon request.

WARRANTY, CAB STRUCTURAL

The prchaser shall receive a cab structure (Aluminum) ten-(10) years or 100,000 miles limited warranty in accordance with, and subject to, warranty certificate RFW0602. The warranty certificate is incorporated by reference into this proposal, and included with this proposal or available upon request.

WARRANTY, BODY STRUCTURAL

The urchaser shall receive a body structure (Aluminum) ten-(10) years or 100,000 miles limited warranty in accordance with, and subject to, warranty certificate RFW0502. The warranty certificate is incorporated by reference into this proposal, and included with this proposal or available upon request.

WARRANTY, CAB PAINT / PERFORATION

The purchaser shall receive a paint and finish (Exterior Clear coated) ten-(10) years limited warranty in accordance with, and subject to, warranty certificate RFW0710. The warranty certificate is incorporated by reference into this proposal, and included with this proposal or available upon request.

WARRANTY, BODY PAINT / PERFORATION

The purchaser shall receive a paint and finish (Exterior Clear coated) ten-(10) years limited warranty in accordance with, and subject to, warranty certificate RFW0710. The warranty certificate is incorporated by reference into this proposal, and included with this proposal or available upon request.

WARRANTY, FRAME ASSEMBLY STRUCTURE

The purchaser shall receive a frame assembly structural twenty-(20) years or 100,000 miles limited warranty in accordance with, and subject to, warranty certificate RFW0304. The warranty certificate is incorporated by reference into this proposal, and included with this proposal or available upon request.

WARRANTY, MERITOR AXLE

FRONT AXLE

The front axle shall be warranted by Meritor for two-(2) years with unlimited miles under the general service application.

REAR AXLE

The rear axle shall be warranted by Meritor for two-(2) years with unlimited miles under the general service application.

WARRANTY, DIESEL ENGINE

The Cummins engine shall be warranted for a period of five-(5) years or 100,000 miles, whichever occurs first.

WARRANTY, REGULATED EMISSIONS SYSTEMS

Non-California Engines-
The purchaser shall receive a Regulated Emissions Systems five-(5) years or 100,000 miles limited warranty in accordance with, and subject to, warranty certificate RFW0140. The warranty certificate is incorporated by reference into this proposal, and included with this proposal or available upon request.

Cummins L9 California Engines-
The purchaser shall receive a Regulated Emissions Systems five-(5) years or 150,000 miles limited warranty in accordance with, and subject to, warranty certificate RFW0141. The warranty certificate is incorporated by reference into this proposal, and included with this proposal or available upon request.

Cummins X12 / X15 California Engines-
The purchaser shall receive a Regulated Emissions Systems five-(5) years or 350,000 miles limited warranty in accordance with, and subject to, warranty certificate RFW0142. The warranty certificate is incorporated by reference into this proposal, and included with this proposal or available upon request.

WARRANTY, TRANSMISSION

The Allison EVS series transmission shall be warranted for a period of five-(5) years with unlimited mileage. Parts and labor shall be included in the warranty.

WARRANTY, ANTI LOCK BRAKE SYSTEM

The ABS brake system shall be warranted for a period of three-(3) years/300,000 miles.

WARRANTY, HALE FIRE PUMP

EXPRESS WARRANTY
Hale Products, Incorporated (“Hale”) hereby warrants to the original buyer that products manufactured by Hale are free of defects in material and workmanship for a period of five-(5) years from the date the product is first placed into service or five and one-half (5-1/2) years from date of shipment by Hale, whichever period shall be first to expire. Within this warranty period Hale will cover parts and labor for the first two-(2) years and parts only for years three (3) through five (5).

LIMITATIONS
HALE’S obligation is expressly conditioned on the Product being:

- Subjected to normal use and service
- Properly installed and maintained in accordance with HALE’S Instruction Manual and Industry Standards as to recommended service and procedures
- Not damaged due to abuse, misuse, negligence, or accidental causes

- Not altered, modified, serviced (non-routine), or repaired other than by an Authorized Service facility
- Manufactured per design and specifications submitted by the original buyer
- Used with an appropriate engine as determined by the engine manufacturers published data
- Excluded are normal wear items identified as but not limited to packing, strainers, anodes, filters, light bulbs, intake screens, wear rings, mechanical seals, etc.

WARRANTY, PLUMBING SYSTEM

The purchaser shall receive a plumbing and piping corrosion-free (Stainless Steel) ten-(10) years or 100,000 miles limited warranty in accordance with, and subject to, warranty certificate RFW0801. The warranty certificate is incorporated by reference into this proposal, and included with this proposal or available upon request.

WARRANTY, WATER TANK

The poly tank manufacturer warrants each tank to be free from manufacturing defects in material and workmanship for the service life of the original vehicle (vehicle must be actively used in fire suppression). The warrant is transferable, with written approval of the manufacturer. Each tank is inspected and tested for leaks prior to leaving the manufacturing facility. The tank shall be installed in the vehicle in accordance to the manufacture's guidelines.

There are no warranties, expressed or implied, which extend beyond the description of the face hereof. There is no expressed or implied warranty of merchantability or a warranty of fitness for a particular purpose. Additionally, this warranty is in lieu of all other obligations or liabilities on the part of the Manufacturer.

MANUAL, CHASSIS OPERATION

There shall be two-(2) digital copies of the chassis operation manual provided with the chassis. The digital data shall include a parts list specific to the chassis model.

MANUALS, ENGINE AND TRANSMISSION OPERATION

There shall be two-(2) printed hard copy sets of the engine operation manual and two-(2) printed hard copy sets of the transmission operation manual specific to the model ordered included with the chassis.

MANUALS, APPARATUS BODY

The contractor shall supply, at time of delivery, at two-(2) sets of complete operation and service documentation covering the completed apparatus as delivered and accepted.

The documentation shall address at least the inspection, service, and operations of the fire apparatus and all major components thereof.

MANUALS, FIRE PUMP

There will be two-(2) copies of pump manuals provided to the department.

SAFETY GUIDE

One-(1) copy of the latest edition of FAMA's Fire Apparatus Safety Guide shall be provided with the completed apparatus.

WIRING DIAGRAMS, CAB/CHASSIS

There will be a complete digital set of electrical schematics provided at the time of delivery. These schematics will have

each circuit properly numbered and in color.

The schematic will show each connector in the circuitry and the position in which each circuit enters, exits, or terminates. The schematic will be drawn in such a manner as to allow individual circuitry to be followed throughout the apparatus.

These schematics will not have the circuitry condensed into a single line or sets of lines. Multiple sheets will be acceptable so long as each of the harnesses is properly identified to the connecting sheet and harness. There will be a border around the paper(s), which contain alpha and numeric characters for indexing coordinate reference. There will be an indexing or part reference document for quick location of items shown on the schematics.

WIRING DIAGRAMS, APPARATUS BODY

There will be a complete set of generic electrical schematics provided at the time of delivery. These schematics will have each circuit properly numbered and in color.

The schematic will show each connector in the circuitry and the position in which each circuit enters, exits, or terminates. The schematic will be drawn in such a manner as to allow individual circuitry to be followed throughout the apparatus.

These schematics will not have the circuitry condensed into a single line or sets of lines. Multiple sheets will be acceptable so long as each of the harnesses is properly identified to the connecting sheet and harness. There will be a border around the paper(s), which contain alpha and numeric characters for indexing coordinate reference. There will be an indexing or part reference document for quick location of items shown on the schematics.

This document will refer the user to the appropriate drawing and page number and to sections of the drawing(s) by the means of letter and number coordinates. The schematic will show all harnesses used in the apparatus cab, chassis and body that is supplied by the chassis and body manufacturer.

Modifications to the manufactured standard harnesses are to be documented and properly indexed for quick identification.

A complete wire number, color, and function listing will accompany the schematics.

== Loose Equipment Pkg. - Pumper - 622.001 06/06/22 ==

NFPA REQUIRED EQUIPMENT, FD SUPPLIED

The loose equipment as outlined in NFPA 1901, 2016 edition, section 5.9 thru 5.9.4 shall be provided by the fire department unless it is listed in this proposal. All loose equipment shall be installed on the apparatus before placed in emergency service, unless the Fire Department authorized agent signs the State of Exception as listed in the NFPA 1901 Standard for Automotive Fire Apparatus sections 4.21 thru 4.21.2.

The loose equipment as outlined in NFPA 1901, 2016 edition, section 5.9 thru 5.9.4 shall be provided by the fire department unless it is listed in this proposal. All loose equipment shall be installed on the apparatus before placed in emergency service, unless the Fire Department authorized agent signs the State of Exception as listed in the NFPA 1901 Standard for Automotive Fire Apparatus sections 4.21 thru 4.21.2.

LADDER(S), 10' FOLDING

H7195 Cinder Pumper Retail

There shall be one (1) Alco-Lite Model FL-10, 10' folding ladder(s) provided with the apparatus. The ladder(s) shall be aluminum, single-section with rubber feet. The ladder(s) shall meet or exceed the latest NFPA standards.

LADDER(S), 14' ROOF

There shall be one (1) Alco-Lite model PRL-14, 14' roof ladder(s) supplied with the apparatus. The ladder(s) shall be aluminum, single-section with folding steel roof hooks on one end and steel spikes at the other. The ladder(s) shall meet or exceed the latest NFPA standards.

LADDER(S), 24' 2-SECTION EXTENSION

There shall be one (1) Alco-Lite model PEL-24, 24' two-section ladder(s) supplied with the apparatus. The extension ladder(s) shall be aluminum with steel spurs on one end. The ladder(s) shall meet or exceed the latest NFPA standards.

Elbow - 4" FNST RL x 5" Storz 30 Degree

The elbow will be located on the 4" right side discharge.

CAP(S), 5" STORZ

There shall be one (1) Kochek model CC507, 5" Storz cap(s) with chain provided with the apparatus.

The cap will be located on the 4" right side discharge elbow.

WHEEL CHOCS

There will be a pair of Ziamatic model SAC-44-E folding wheel chocs supplied with the apparatus.

HOLDER, WHEEL CHOCS

There will be a Ziamatic model SQCH-44-H horizontal wheel choc holder installed on the apparatus as directed.

The holders will be located below compartment L1.

== Adminstration - 622.001 06/06/22 ==

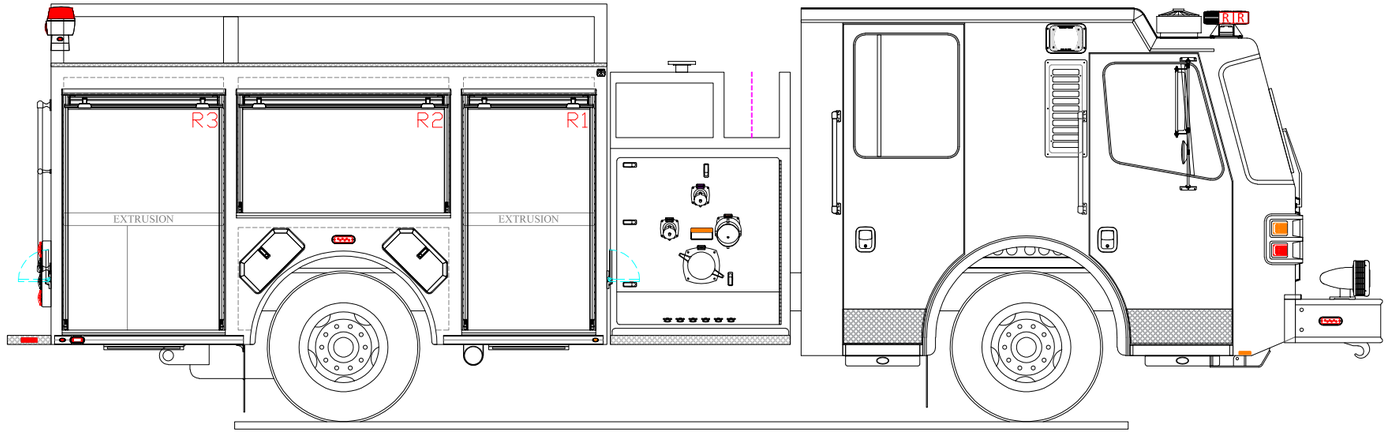

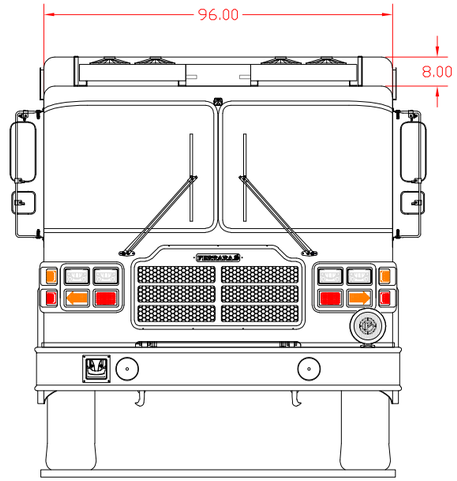

COMPARTMENT DIMENSIONS		
COMPT.	OPENING	INTERIOR
L1	33.50W X 60.25H	36W X 73H X 25D
L2	55.50W X 28.25H	58W X 41H X 25D
L3	41.50W X 60.25H	44W X 73H X 12D UPPER TRANS. LOWER 25D LOWER
R1	33.50W X 60.25H	36W X 73H X 12D UPPER TRANS. LOWER 12D
R2	55.50W X 28.25H	58W X 41H X 12D
R3	41.50W X 60.25H	44W X 73H X 12D UPPER TRANS. LOWER
B1	46.00W X 28.00H	46W X 28H X 21D

IT IS UNLAWFUL TO COPY OR REPRODUCE ANY OR ALL OF THIS DRAWING WITHOUT THE WRITTEN PERMISSION OF FERRARA FIRE APPARATUS. ANY UNAUTHORIZED REPRODUCTION WILL RESULT IN PROSECUTION TO THE FULLEST EXTENT OF THE LAW. DIMENSIONS AND ITEM LOCATIONS ARE APPROXIMATE AND ARE SUBJECT TO DEVIATIONS THAT MAY OCCUR OR BE NECESSARY DURING CONSTRUCTION. SOME DETAILS MAY NOT BE SHOWN.

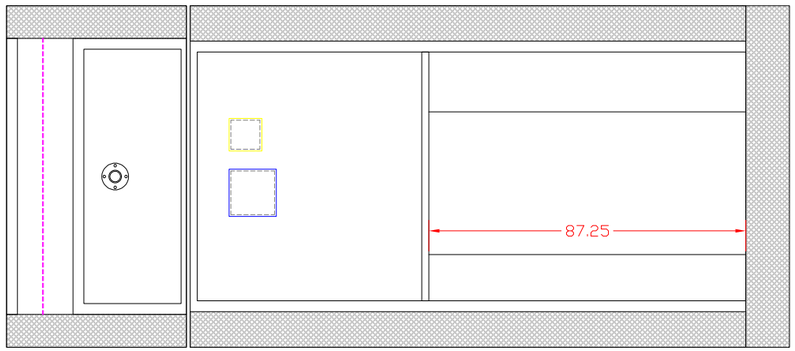

FERRARA

CINDER PUMPER RETAIL UNIT
411 FIRE EQUIPMENT
JOB NO.: H7194
1,750 GPM HALE QMAX PUMP
750 GALLON WATER TANK
30 GALLON FOAM TANK

CUSTOMER APPROVAL

SIGNATURE: _____
PRINT: _____
TITLE: _____
DATE: _____

THIS DRAWING IS A VISUAL REPRESENTATION OF A SPECIFIED APPARATUS. IN THE EVENT OF DISCREPANCIES BETWEEN SPECIFICATIONS AND DRAWING, THE SPECIFICATIONS SHALL PREVAIL.

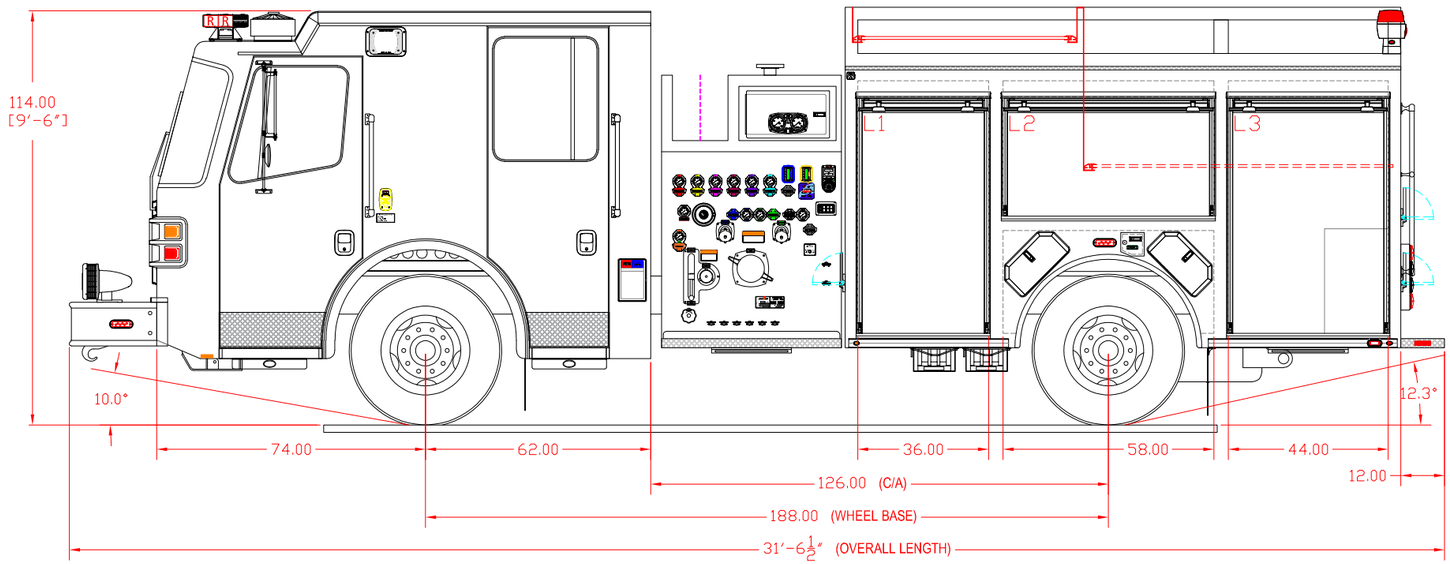

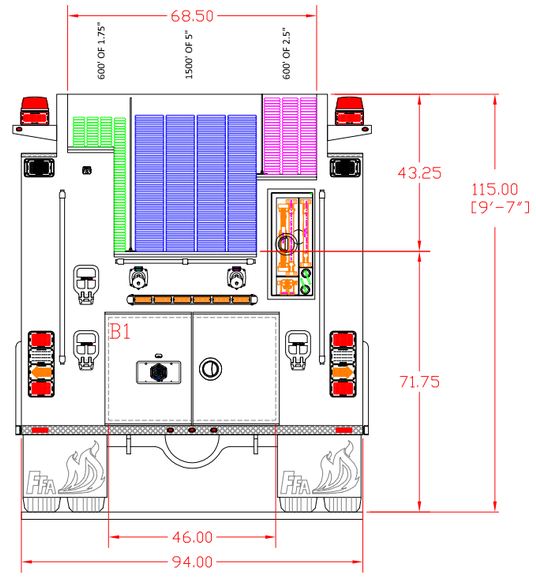

VERSION	APPROVAL
DRAWN BY	AS
DATE	5/9/25

DIMESIONS ARE SUBJECT TO VARIATIONS DUE TO MANUFACTURING PROCESS

Contract Award Letter

May 22, 2024

411 Equipment LLC
1815 4th Street Northwest
Albuquerque, NM 87102

RFP NUMBER: 2024-25
RFP DESCRIPTION: Truck Bodies
CONTRACT NUMBER: 2024-25-C115-ALL
Category 1 - Lot 1 - Truck Bodies

Dear Procurement Partner

Cooperative Educational Services (CES) thanks you for responding to our 2024-25 solicitation. The responses have been reviewed and it is our pleasure to inform you that your company has been selected to provide the products and services indicated in your response.

The Contract, in conjunction with the Contract and RFP documents, constitute the Agreement between the parties. Please retain all documents for your records. This Indefinite Delivery and Indefinite Quantity contract, as defined in NMSA 13-1-63; beginning May 22, 2024 and expiring May 21, 2028, pursuant to 13-1-150 NMSA.

It is the vendor's responsibility to keep pricing up to date throughout the life of the contract.

Sincerely yours,

Cooperative Educational Services

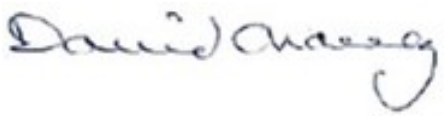

David Chavez
Executive Director, Chief Procurement Officer
Office: 505.344.5470

ACCEPTANCE OF PROPOSAL AND OFFER
AND CONTRACT AWARD

RFP NUMBER: 2024-25
RFP DESCRIPTION: Truck Bodies
CONTRACT NUMBER: 2024-25-C115-ALL
Category 1 - Lot 1 - Truck Bodies

CONTRACT

This contract award is being made by Cooperative Educational Services ("CES"), 10601 Research Rd. SE, Albuquerque, New Mexico 87123 effective this 22nd day of May 2024, to 411 Equipment LLC, with its principal office located at 1815 4th Street Northwest, Albuquerque, NM 87102, pursuant to the above referenced CES conducted Request for Proposal ("RFP") or Request for Bids ("RFB") procurement, and Contract Holder accepts the award and enters into this contract pursuant to the following terms and conditions.

RECITALS

Cooperative Educational Services (CES) is a cooperative procurement agency created by a Joint Powers Agreement as authorized by Section 11-1-1, et. seq., N.M.S.A., 1978, and Section 13-1-135 and procures tangible personal property, services and construction services ("Products, Services and/or Construction Services") pursuant to the New Mexico Procurement Code for the benefit of its Members and Participating Entities. The Members consist of public educational institutions in New Mexico that are signators to a Joint Powers Agreement establishing CES as their procurement agency. The Participating Entities are governmental and 501(C) (3) organizations that have entered into Participating Entity Agreements with CES which allow them to take advantage of the procurement efforts of CES.

The undersigned ("Contract Holder") has successfully responded to a RFP or RFB published by CES in accordance with the Procurement Code, (13-1-103, 111, 112), and Contract Holder is being awarded this RFP or RFB contract by CES which allows Contract Holder to offer Products, Services and Construction Services in accordance with the terms and conditions set forth herein and in the RFP or RFB documents and this contract award.

CONTRACT TERMS

1. The initial contract term shall be from the effective contract award date May 22, 2024 through May 21, 2028. CES reserves the right to renew the Contract through a written amendment signed by all required signatories, but in any case, the Contract shall not exceed the total number of years allowed pursuant to NMSA 1978 13-1-150. CES reserves the right to offer month-to-month extensions if it is determined by CES to be in the best interest of CES Members/Participating Entities

2. Contract Holder agrees and acknowledges that the contract terms and provisions are those contained in the above referenced RFP or RFB and agrees to furnish all Products, Services and/or Construction Services in compliance with all terms, conditions, specifications of and amendments to this RFP or RFB. Contract Holder understands that his obligations under this RFP or RFB contract extend to CES Members and Participating Entities who are third party beneficiaries of

this RFP or RFB procurement process. The Members/Participating Entities may negotiate with Contract Holder certain additional terms and conditions relating to the scope of services and other performance details. However, the terms and conditions of the RFP or RFB may not be altered or amended except with the approval of CES and in accordance with the State Procurement Code.

3. Contract Holder acknowledges and agrees that CES' purpose and function is to act as a cooperative procurement agent on behalf of its Members and Participating Entities so that they may take advantage of these procurement efforts. CES does not have any subsequent responsibility relating to the quality and fitness of any Products, or the performance of any Services and Construction Services by Contract Holder. Any purchase orders placed by a CES Member or Participating Entity with Contract Holder directly or through CES and any resulting contract between the Contract Holder and a CES Member or Participating Entity do not create any additional obligations on the part of CES.

4. For transactions which involve CES transmitting purchase orders from a Member/Participating Entity to Contract Holder, CES volunteers to act as a payment facilitator to make payments to Contract Holder with funds transferred to CES by the Member/Participating Entity in accordance with Member/Participating Entity's written instructions and to provide an accounting of all monies paid or received by CES pursuant to this Agreement. CES also volunteers to provide informal mediation services between Contract Holder and Member/Participating Entity in the event any dispute arises between them.

5. Contract Holder understand and agree that upon CES' receipt of funds from the Member/Participating Entity, CES has no right or authority to thereafter apply those funds to any purpose other than as instructed by Member/Participating Entity. CES shall incur no liability to Contract Holder except for liability arising from CES' own gross negligence or willful misconduct, to the extent allowed by New Mexico law. Through this procurement process, Contract Holder is authorized to provide the described Products, Services or Construction Services. CES has no obligation or right to involve itself with the manner or method by which Contract Holder provides these Products, Services or Construction Services.

6. To the extent allowed by New Mexico law, Contract Holder agrees to hold CES harmless from all costs, expenses, attorney fees and judgments based upon claims between a Member/Participating Entity and Contract Holder in connection with the specified Products, Services or Construction Services provided by Contract Holder

7. Contract Holder agrees that it will not assert any claim against CES in the event that a dispute arises regarding the alleged failure of Contract Holder or a Member/Participating Entity to perform as provided for in the RFP or RFB documents, any purchase order or other contract between Contract Holder and a Member/Participating Entity. This does not include claims against CES based upon the alleged gross negligence or intentional acts of CES.

8. Any liability incurred in connection with this Agreement shall be subject to the immunities and limitations of the New Mexico Tort Claims Act, §§ 41-4-1 et seq, NMSA 1978, as amended.

The Recitals are incorporated herein as contract terms.

Agreed effective the above date.

Cooperative Educational Services

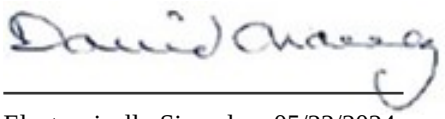

Electronically Signed on 05/22/2024

Executive Director

Date: 05/22/2024

411 Equipment LLC

Pete Marquez

Electronically Signed on 05/22/2024

Owner/GM/Managing Member

GENERAL SCOPE OF WORK AND SPECIFICATIONS

PART I INTRODUCTION

A. GENERAL

The purpose of this Request for Proposal is to solicit sealed proposals to establish, through competitive public solicitation and negotiation, a multi-year cooperative contract, or contracts, between Cooperative Educational Services (CES) and the successful Offeror(s).

In order to assist CES Members or Participating Entities which consist of over 440 educational and governmental entities in New Mexico, CES is seeking proposals from Offeror(s) who have the experience and can provide all types of truck bodies for Class 1 to Class 8 truck chassis and cutaway van; parts and accessories; maintenance and repair services; and warranty service and repairs.

It is the intent of CES to establish a contract with multiple vendors who can supply the desired items and services listed above and throughout this Scope of Work, for direct purchase, and as needed. All vehicles and services are to be supplied according to industry standards, according to the material manufacturers' recommendations and to the satisfaction of CES' Membership. Selected Contractors shall provide the items, and/or services as requested by the Member's Representative or their designee. CES or its Membership offers no guarantee of products or services to be purchased under the Contract.

B. NOTICE

If practicable, CES intends to make multiple awards for sufficient coverage statewide. Price agreements` term, resulting from this RFP, are pursuant to New Mexico Procurement Code, NMSA, 1978, 13-1-150.

This is an open-ended RFP. At the discretion of CES, the RFP may remain open for accepting additional proposals after a source award or multiple source awards are made to allow CES to make additional source awards if CES determines in accordance with ¶13-1-154 NMSA 1978 that such additional awards are necessary to fully meet CES member or participating entity service or economy needs identified by CES prior to a source award(s) or identified after a source award(s) is made. Any new Offeror may not have access to any RFP documents submitted by another Offeror or to documents involved in the rating or ranking process of Offerors, as this would negate the open and fair competition process. Offerors that submitted a proposal for this RFP event and did not receive a recommendation for award may not submit a new proposal for the same RFP event. New proposals will be evaluated as prescribed in the original RFP and evaluated against all other RFP proposals. Any new source awards will be aligned with the contract end date of the original source awards. CES reserves the right to terminate the opportunity for submittal of additional offers at any time prior to the original contract award expiration date.

C. DEFINITIONS

Class: GVWR class ratings. “Light Duty Class” trucks and vans are: Class 1: 0 to 6000#; Class 2: 6001 to 10000#; "Medium Class" trucks are: Class 3: 10001-14000#; Class 4: 14001-16000#; Class 5: 16001¬19500#; Class 6: 19501-26000#. "Heavy Class" trucks are: Class 7: 26001-33000#; Class 8: over 33000#.
Dealer Prep: An amount or fee that the dealer charges to receive and prepare the purchase vehicle fordelivery to the customer.
EPA: Environmental Protection Agency
Factory Invoice: The actual invoice the manufacturer sends to the dealer for the vehicle.
FMCSR: Federal Motor Carrier Safety Administration
FMVSS: Federal Motor Vehicle Safety Standards
GVWR: Gross Vehicle Weight Rating; the maximum allowable weight of the fully loaded vehicle, permanufacturer, including liquids, passengers, cargo, and the tongue weight of any towed vehicle.
Insurance Institute for Highway Safety (IIHS): Tests new models by crashing them into an energy-absorbing, deformable barrier at 40 mph.
Manufacturer’s Suggested Retail Price (MSRP): The retail price of the new motor vehicle suggested by the manufacturer, including the retail delivered price for each accessory or item of optional equipment physically attached to the new motor vehicle at the time of delivery to the new motor vehicle dealer thatis not included in the retail price suggested by the manufacturer for the new motor vehicle.
National Highway Traffic Safety Administration (NHTSA): A federal agency that regulates safety featuresof vehicles and that crash tests new cars for front impact into a flat, rigid barrier at 35 mph, and side impact with the test car traveling 17 mph being hit broadside by another car traveling 34 mph.
NMDOT: New Mexico Department of Transportation
NMMVD: New Mexico Motor Vehicle Department
OEM: The original equipment manufacturer
Wholesale Price: The cost of the vehicle to the dealer minus the holdback, any factory incentives andrebates.
49CFR393: Parts and Accessories Necessary for Safe Operation
49CFR571: Federal Motor Vehicle Safety Standards

PART II SCOPE OF WORK AND SPECIFICATIONS

CES is seeking proposals from Offeror(s) who have the experience and can offer the products and services listed throughout this RFP, which can be configured and equipped to meet individual CES Members or Participating Entities’ needs.

The standards and specifications provided below are intended to establish minimum requirements for the Offeror and provide a general overview of the quality and type of products and services being requested. Always use the latest up to date versions of a standard, code, or specification.

A. GENERAL REQUIREMENTS

1. The Contractor is responsibility to keep current all required New Mexico Motor Vehicle Division licensing requirements during the term of the contract, and to furnish license copies at any time on request by CES, its Members or Participating Entities. If Contractor does not maintain current any required New Mexico Motor Vehicle Division licensing requirements, CES reserves the right to immediately terminate the contract.

2. All bodies shall be the new.
3. The Offeror will demonstrate that its facility(s) possesses the resources to supply and support the vehicles offered under this solicitation.
4. All billings and invoices must identify the CES purchase order number, complete description of vehicle with all associated options being billed, and include the name of the vehicle, model number and vehicle identification number.
5. The contractor shall include a copy of any manufacturers' order guide with this proposal. Upon request, the dealer will provide a copy of the order guide to any CES Member or Participating Entity wishing to purchase a vehicle.
6. The prices for all bodies shall be F.O.B. the Offeror's dealership, or any location within 100 miles of the dealership.
7. The Offeror will furnish a complete set of specifications for all bodies offered that include all weights, heights, widths, etc. and other information to assist in the evaluation process.
8. It shall be the responsibility of the Offeror to assure that all recall notices and other technical service bulletins or notifications from the factory are sent directly to the CES Member or Participating Entity in a timely manner.
9. All optional equipment and accessories shall be original equipment from the body manufacturer, or third party authorized by the body manufacturer and installed at the factory or by the dealer.
10. Any dealer provided option must be priced separately and may only be included if specifically ordered by the CES Member or Participating Entity. Under no conditions may a CES Member or Participating Entity be charged additional costs for items such as conveyance or document fees, or advertising surcharges.

B. DELIVERY

1. All bodies ordered must be delivered within 5 days of the quotes delivery date that has been accepted by a CES Member or Participating Entity. If a vehicle is delayed beyond the original quoted date, or if the delayed delivery is beyond the fiscal year (ending June 30th), CES with the agency approval, reserves the right to cancel the purchase order and the member agency will be under no obligation to select a different vehicle if the vendor is unable to deliver on time.
2. In the case of a delay, CES Member or Participating Entity needs to be notified within five (5) business days of notice from the manufacturer to Offeror. The CES Member or Participating Entitywill notify CES and the Offeror within seven (7) business days whether to proceed or cancel the order. CES, CES Member or Participating Entity will be under no obligation to select a different vehicle if the order is cancelled or to select a different vehicle if the contractor is unable to deliveron time.
3. All deliveries will be made Monday through Friday during normal business hours. Vendor will contact the CES Member or Participating Entity 72 hours prior to delivery to schedule a delivery time, location and date.
4. Offeror will provide owners with two (2) complete sets of operations and parts manuals and one (1) operational and parts manual in electronic format on CD-R, CD-RW, DVD-R or DVD-RW. If safety videos and handbooks are available, two (2) sets will be provided to the member at no coston CD-R, CD-RW, DVD-R or DVD-RW.
5. If required, Manufacturer's Certificate of Origin (MCO) or Manufacturer's Statement of Origin (MSO) needs to be provided to CES Member or Participating Entity after the Offeror receives payment from CES. All documents must show the legal name of the CES Member or ParticipatingEntity.

C. PRE-DELIVERY SERVICE

Each unit shall be DOT inspected and include the appropriate documentation and decal. In addition, each unit shall be equipped with the required fire extinguisher and reflective triangle kit.

1. Complete lubrication
2. Checking of all fluid levels to ensure that they are filled to manufacturers' specifications.

D. VEHICLE INSPECTION

1. Prior to acceptance by the ordering agency, each vehicle shall be subject to a complete inspection by CES Member or Participating Entity.
2. Inspection shall include, but not necessarily be limited to, conformity to the specifications, mechanical integrity, quality or workmanship and materials, and appearance defects.
3. If a body fails inspection, corrections shall be made within seven (7) calendar days or time as mutually agreed to by the CES Member or Participating Entity and contractor. After corrections are made, the normal inspection time will start fresh. All corrections shall be made without any inconvenience to CES Member or Participating Entity.

E. WARRANTY

1. At the minimum, warranties shall be the manufacturer's standard new vehicle warranty. All warranties shall begin when the vehicle is placed in service. It shall be the responsibility of the ordering CES Member or Participating Entity to notify the contractor when a vehicle is actually put in service.

F. EXTENDED WARRANTY OPTIONS

1. Offeror is encouraged to offer extended warranties for all major mechanical, electrical and electronic components to cover the member after the standard warranty has expired.
2. The terms, conditions, stipulation, exceptions, limitations and warrantee periods will be clearly identified.
3. The Offeror must provide all warrantee work, ongoing maintenance, have an inventory of parts and have access to specialized or custom parts within 72 hours.
4. The term of a warranty is extended by any period of time during which repair services are not available to the CES Member or Participating Entity because of any war, invasion, strike, fire, flood or other natural disaster.

G. SAFETY

1. The Offeror will provide, at no charge to the Member/Participating Entity, MSDS information providing asbestos content of friction materials (brake pads, brake shoes, clutch discs, etc.), upon request.
2. All bodies offered shall comply with most current for FMVSS standards if applicable.

H. EXTENDED WARRANTY OPTIONS

1. Offeror is encouraged to offer extended warranties for all major mechanical, electrical and electronic components to cover the member after the standard warranty has expired.
2. To cover parts, labor, and towing.

3. To include maintenance service plans.

4. The terms, conditions, stipulation, exceptions, limitations and warranty periods will be clearly identified.
5. Warranty and all terms, conditions, stipulation and warranty periods will be clearly identified to the CES Member or Participating Entity.

I. BODIES AND UTILITY BED OPTIONS

1. The Offeror is encouraged to propose a full line of bodies for various members' operations.
2. May include, but not be limited to: Stake beds, flatbed, box bodies, dump beds, lift beds, lift gates, rear and side loader garbage truck bodies, roll-off bodies, miscellaneous trash truck bodies, tanks bodies, component body, service bodies, van bodies, haulers, service and utility bodies landscaper, refuse bodies all types, mounted cranes or booms, refrigerated bodies, brush truck, custom designed bodies or bed, etc.
3. Third-party equipment is permitted, and factory or dealer installed is preferred.
4. Bodies or utility beds offered may be hydraulically, mechanically, and/or electrically operated, powered by the vehicle's electrical supply, a power-take-off (PTO), independent or separate power source. PTO's shall be installed in accordance with vehicle manufacturer's recommendations.
5. In the event the factory installed vehicle electrical system requires modifications/upgrades to provide power to the optional utility bed, installing dealer shall ensure modifications/upgrades will be in accordance with the vehicle manufacturer's specifications, and not void the manufacturer's warranty.
6. Must be securely fastened to the basic vehicle structure and bolted securely through chassis rail flange as per chassis manufacturer design specifications.
7. Bodies shall not exceed the manufacturer's vehicle load recommendations or the gross vehicle weight rating (GVWR). The factory-installed vehicle braking system shall meet or exceed the US Department of Transportation (USDOT) and New Mexico Department of Transportation (NMDOT) stopping requirements for the total vehicle GVWR.
8. All options provided shall comply with USDOT and NMDOT requirements for width, height, weight, lighting, safety, and other requirements for operation on city, and county roads, and state and federal highways. Vendor agrees to consult and provide CES Member or Participating Entity requirements and specifications for bed and options to comply with USDOT and NMDOT requirements.
9. Dealer shall supply to the CES Member or Participating Entity any USDOT and/or NMDOT certificates stating compliance for the vehicle, and/or utility bed installed on the vehicle, if applicable and/or required for registration and use on highways.
10. Upon request by the CES Member or Participating Entity prior to vehicle delivery, the dealer will assist in obtaining, or provide service to obtain any required vehicle inspections. Vehicle shall pass all required inspections prior to passing of vehicle title to CES Member or Participating Entity.
11. Optional Equipment can be offered to include but not limited to wet kits, refuse containers, roll- off containers, tarp systems, snowplows, salt spreaders, lift gates, GPS tracking systems, in vehicle monitoring systems, winches, custom fabrication, metal work services, various type containers for trash pickup, etc.
12. Each equipment shall be a new and currently advertised model of the manufacturer's latest design, equipped with all standard component items identified in the manufacturer's description and specification publications, whether or not specifically requested and except where optional components are specified herein.
13. Manufacturer's Standard Equipment: All equipment and components listed as standard by

the manufacturer for models offered shall be furnished.

14. Manufacturer's Specification: Complete manufacturer's specification, published literature, and photos or illustrations of units proposed should be furnished with your proposal. Only new models in current production and in service that are catalogued by the manufacturer, and forwhich printed literature and specifications are available will be accepted.
15. Hose And Wiring Routing, Hardware Requirements: All hoses and wiring shall have adequate protective covers wherever there is a possibility of contact with any other components. Separators shall be used where applicable. No tape or adhesive fasteners will be accepted. All hoses, wiring and pipes shall be routed to be clear of all heat sources and shall be protected fromany present or potential source of snags, abrasions or sharp edges. If any wiring for any lamps is routed through any tool compartment or canopy, these wires shall be enclosed. All fasteners (nuts,bolts, rivets & etc.) shall be per manufacturer specification with a rust inhibiting coating.

J. WELDING

1. All welding shall be continuous where applicable. All welding shall be performed in accordance with the applicable requirements of the latest codes, rules or specifications of the American Welding Society, (AWS).

K. Furnish two (2) complete sets of Operator, Parts, and Technical manuals including electrical wire diagrams.

L. BACK-UP WARNING DEVICE

1. Shall be waterproof that is readily audible outside each vehicle when the transmission is in reverse.
2. A rear obstacle detection system can be offered.

M. BUMPERS

1. The front bumpers shall be OEM standard design.

N. BODY

1. Corrosion Protection: Per OEM manufacturer's specifications.

O. EXTERIOR LIGHTING

1. All lights for taillights, brake light, turn signal, back-up, collision avoidance lights and clearance marker lights shall be Light Emitting Diode (LED).

P. PAINT AND TRIM

1. Color shall be standard colors offered from the OEM manufacturer. Custom paint colors can be Offeror as an option.
2. All exterior surfaces shall be smooth and free of wrinkles and dents.
3. Exterior surfaces to be painted shall be properly prepared as required by the paint system supplier.

4. Drilled holes and cutouts in exterior surfaces shall be made prior to cleaning, priming and painting to prevent corrosion.
5. To the degree consistent with industry standards for commercial vehicle finishes, painted surfaces shall have gloss and orange peel shall be minimized.
6. All exterior finished surfaces shall be impervious to diesel fuel, gasoline and commercial cleaning agents.
7. Paint shall be applied smoothly and evenly with the finished surface free of dirt and the following other imperfections:
   a. Blisters or bubbles appearing in the topcoat film
   b. Chips, scratches, or gouges of the surface finish
   c. Cracks in the paint film
   d. Craters where paint failed to cover due to surface contamination
   e. Over spray
   f. Peeling
   g. Runs or sags from excessive flow and failure to adhere uniformly to the surface
   h. Chemical stains and water spots

Q. SAFETY EQUIPMENT

1. Shall at the minimum comply with FMVSS.

R. LICENSE PLATES

1. Provisions shall be made to mount standard size U.S. license plates per SAE J686 on the rear of the body if applicable.

S. OPTIONAL EQUIPMENT AND FEATURES

1. The Offeror is to provide a list of optional equipment and features that can be offered to customize the body to meet the CES Members or Participating Entities needs, such as hydraulic and electric gate lifts, ramps, tow hooks, generators, lift buckets, power take off unit (PTO), ladder racks, wet unites, fire truck bodies, etc.
2. The Offeror will need to provide details on the process that will be used by CES Members or Participating Entities to identify the optional equipment and features and how they will be implemented in to the design of the vehicle.

T. REPLACEMENT PARTS

1. OEM or aftermarket parts approved by the OEM.
2. If aftermarket parts are provided for warranty repair, they must not void the manufactures warranty.

U. SERVICES

1. Repair, maintenance and warranty repair services may be offered. Body repair services are requested. Specialty repairs may be performed by an authorized sublet repair facility.

V. USED BODIES

1. Used bodies may be offered under solicitation. Pricing shall be based upon Dealer acquisition price + cost to comply to Federal and NMDOT safety standards + body service

+transportation + dealer markup not to exceed a maximum of XX.XX% to arrive at Selling Price

2. According to the requirements for 13-1-155 A NMSA 1978, any used item of "… tangible personal property the estimated cost of which exceeds five thousand dollars ($5,000), …" requires at a minimum "… a written warranty for at least ninety days after date of delivery and an independent "certificate of working order" by a qualified mechanic or appraiser."
3. contract shall have only ASE-Certified Master Truck Equipment Technicians, or at a minimum, a technician with prior medium-heavy duty truck/bus experience in air brake systems, steering and suspension, to repair vehicles.
4. Warranty repairs shall only be performed by manufacturer authorized repair facilities for vehicles and/or optional installed equipment.
5. Tire repair and maintenance services may include, but not be limited to: balancing, re-grooving, rotating, patching, tube replacement, wheel stud replacement, etc.

W. TRAINING

1. Training for maintenance staff on the proper service and repair of the vehicle and body.
2. Training for drivers on the proper and safe operation of the vehicle and body with special emphasis on how the emission control's function.

X. PUBLICATIONS AND PRINTED MATERIALS:

1. Each vehicle will have a complete set of operation, and warranty publications. The following shall be provided at time of delivery:
   a. Operation Manual: A complete operations manual and troubleshooting guide with a detailed manufacturer's parts list that covers the conversion features on the vehicle as listed in this specification. The manual will provide complete, comprehensive instructions to include but not limited to air conditioning systems, tie downs, heater, emissions, engine operations, lights, radio, wiring diagram and body modifications, accessories and related equipment.
   b. A complete schematic diagram of all hydraulic lines, air lines and electric circuits.
   c. Warranty Information: Each vehicle will have a published listing of contractor warranty repair locations, including address, telephone number, and contact name.

Y. ADDITIONS TO THE SCOPE OF WORK

Offerors who receive a contract as a result of this solicitation, and through the duration of the contract, may propose vehicles, equipment, products, and related services that were either inadvertently left out of this RFP, or are new technology. Such proposed items shall be submitted to CES for review and must remain consistent with the spirit of the RFP. Items approved shall be added to the contract through an amendment, mutually agreed upon by all parties to the contract.

Omissions in this proposal of any provision herein described shall not be construed as to relieve the vendor of any responsibility or obligation to the complete and satisfactory delivery, operation, and support of any and all equipment or services.

ATTACHMENT B
TO
ACCEPTANCE OF PROPOSAL AND OFFER
AND CONTRACT AWARD

PRICING

All pricing including updates/changes must be uploaded through the vendor portal in the eProcurement System for review and approval by CES.

A Price List/Pricing: The Offeror will upload through the vendor portal electronic copies of or provide electronic access to the approved current price list(s) for products and services offered under this solicitation (RFP) upon execution of this contract. The Offeror must keep current all pricing for any contract issued as a result of this solicitation. Should the Offeror fail to update pricing with CES, the Offeror shall honor their pricing on file with CES at the time of their quote submittal to the CES Member/Participating Entity. Discounts off the current price list are permitted and must remain firm throughout the life of the contract. Discount off list price must be clearly noted in the price quote to the member. All pricing must include the CES administration fee.

B New Technology and Products: New products or related services announced by manufacturer and/or Contractor may be added to this existing contract. Pricing shall be equivalent to the percentage discount of other product(s); is substantially superior to the original product(s) offered; is discounted in a similar or to a greater degree; and if the product(s) meet the requirements of the original RFP. No products may be added to avoid competitive procurement procedures. CES is responsible for approving any product, service or technology for this contract. CES can reject any approved additions, any new product, service or technology for this contract, without cause.

C Price Quote/Proposal: When preparing a quote/proposal under a CES awarded contract, the Offeror must clearly identify and break out quantities, descriptions, supplies, materials, equipment and services into individual line items as they appear on the Offeror’s awarded price schedule or pricing methodology. At a minimum all quotes or proposals shall include the following: description, “hourly labor rate or the list/catalog unit price”, “the per cent discount offered” and the final “CES price”. All stated prices must include the CES one point two five percent (1.25%) administrative fee. Shipping/Freight costs and the New Mexico Gross Receipts Tax as applicable must be stated in separate lines.

D Price Reduction, Promotional and Special Pricing: A price reduction can be offered at any time and will become effective upon approval by CES. CES reserves the right to approve or disapprove such requests.

E Price Increases: Anytime during the life of the contract, pricing can be updated (increased/decreased) with proper justification letter from the manufacturer or distributor thereof and will become effective upon approval by CES. CES reserves the right to approve or disapprove

such requests.

F Price Surcharges: Depending on current market conditions, surcharges may apply as approved by CES.

COST PROPOSAL

Category 1 - Lot 1 - Truck Bodies | Truck Bodies 2024-25 | 411 Equipment LLC

Product Name	Product Description	Unit Of Measure	All Regions	Region 1	Region 2	Region 3	Region 4	Region 5	Region 6	Region 7	Region 8
Utility Beds	Percent of Discount off Printed/Published Price Sheets	Percent	2 %	2 %	2 %	2 %	2 %	2 %	2 %	2 %	2 %
Flatbed Body	Percent of Discount off Printed/Published Price Sheets	Percent	2 %	2 %	2 %	2 %	2 %	2 %	2 %	2 %	2 %
Stakebed Body	Percent of Discount off Printed/Published Price Sheets	Percent	2 %	2 %	2 %	2 %	2 %	2 %	2 %	2 %	2 %
Van Body	Percent of Discount off Printed/Published Price Sheets	Percent	2 %	2 %	2 %	2 %	2 %	2 %	2 %	2 %	2 %
Dump Body	Percent of Discount off Printed/Published Price Sheets	Percent	2 %	2 %	2 %	2 %	2 %	2 %	2 %	2 %	2 %
Tank Body	Percent of Discount off Printed/Published Price Sheets	Percent	2 %	2 %	2 %	2 %	2 %	2 %	2 %	2 %	2 %
Utility Body	Percent of Discount off Printed/Published Price Sheets	Percent	2 %	2 %	2 %	2 %	2 %	2 %	2 %	2 %	2 %
Bucket Body	Percent of Discount off Printed/Published Price Sheets	Percent	2 %	2 %	2 %	2 %	2 %	2 %	2 %	2 %	2 %
Crane Body	Percent of Discount off Printed/Published Price Sheets	Percent	2 %	2 %	2 %	2 %	2 %	2 %	2 %	2 %	2 %
Roll-Off Body	Percent of Discount off Printed/Published Price Sheets	Percent	2 %	2 %	2 %	2 %	2 %	2 %	2 %	2 %	2 %
Front Loader Body	Percent of Discount off Printed/Published Price Sheets	Percent	2 %	2 %	2 %	2 %	2 %	2 %	2 %	2 %	2 %
Front End Loader Body	Percent of Discount off Printed/Published Price Sheets	Percent	2 %	2 %	2 %	2 %	2 %	2 %	2 %	2 %	2 %
Side Loader Body	Percent of Discount off Printed/Published Price Sheets	Percent	2 %	2 %	2 %	2 %	2 %	2 %	2 %	2 %	2 %
Rear Loader Body	Percent of Discount off Printed/Published Price Sheets	Percent	2 %	2 %	2 %	2 %	2 %	2 %	2 %	2 %	2 %
Grappler Body	Percent of Discount off Printed/Published Price Sheets	Percent	2 %	2 %	2 %	2 %	2 %	2 %	2 %	2 %	2 %
Trash Body Rear Loading	Percent of Discount off Printed/Published Price Sheets	Percent	2 %	2 %	2 %	2 %	2 %	2 %	2 %	2 %	2 %
Trash Body Side Loading	Percent of Discount off Printed/Published Price Sheets	Percent	2 %	2 %	2 %	2 %	2 %	2 %	2 %	2 %	2 %
Hydro Vacuum Tank Body	Percent of Discount off Printed/Published Price Sheets	Percent	2 %	2 %	2 %	2 %	2 %	2 %	2 %	2 %	2 %
Tanker Body	Percent of Discount off Printed/Published Price Sheets	Percent	2 %	2 %	2 %	2 %	2 %	2 %	2 %	2 %	2 %
Cutaway Ambulance Body	Percent of Discount off Printed/Published Price Sheets	Percent	2 %	2 %	2 %	2 %	2 %	2 %	2 %	2 %	2 %
Cutaway Utility Van Body	Percent of Discount off Printed/Published Price Sheets	Percent	2 %	2 %	2 %	2 %	2 %	2 %	2 %	2 %	2 %
Cutaway Walk In Utility Van Body	Percent of Discount off Printed/Published Price Sheets	Percent	2 %	2 %	2 %	2 %	2 %	2 %	2 %	2 %	2 %
Flatbed Dump Body	Percent of Discount off Printed/Published Price Sheets	Percent	2 %	2 %	2 %	2 %	2 %	2 %	2 %	2 %	2 %
Wrecker Boom Type Body	Percent of Discount off Printed/Published Price Sheets	Percent	2 %	2 %	2 %	2 %	2 %	2 %	2 %	2 %	2 %
Wrecker Roll Off Body	Percent of Discount off Printed/Published Price Sheets	Percent	2 %	2 %	2 %	2 %	2 %	2 %	2 %	2 %	2 %
Animal Control Body	Percent of Discount off Printed/Published Price Sheets	Percent	2 %	2 %	2 %	2 %	2 %	2 %	2 %	2 %	2 %
Mechanics Body	Percent of Discount off Printed/Published Price Sheets	Percent	2 %	2 %	2 %	2 %	2 %	2 %	2 %	2 %	2 %

Product Name	Product Description	Unit Of Measure	All Regions	Region 1	Region 2	Region 3	Region 4	Region 5	Region 6	Region 7	Region 8
Lube Body	Percent of Discount off Printed/Published Price Sheets	Percent	2 %	2 %	2 %	2 %	2 %	2 %	2 %	2 %	2 %
Fire Truck	Percent of Discount off Printed/Published Price Sheets	Percent	2 %	2 %	2 %	2 %	2 %	2 %	2 %	2 %	2 %
Fire Truck Brush Body	Percent of Discount off Printed/Published Price Sheets	Percent	2 %	2 %	2 %	2 %	2 %	2 %	2 %	2 %	2 %
Street Sweeper Body	Percent of Discount off Printed/Published Price Sheets	Percent	2 %	2 %	2 %	2 %	2 %	2 %	2 %	2 %	2 %
Miscellaneous Body Types	Percent of Discount off Printed/Published Price Sheets	Percent	2 %	2 %	2 %	2 %	2 %	2 %	2 %	2 %	2 %
Emergency Road Side Service	Cost per mile	cost	$ 215	$ 215	$ 215	$ 215	$ 215	$ 215	$ 215	$ 215	$ 215
Optional Equipment	Percent of Discount off Printed/Published Price Sheets	Percent	2 %	2 %	2 %	2 %	2 %	2 %	2 %	2 %	2 %
Hourly Rates for Installation of Accessories and Equipment	Hourly Rate	cost	$ 175	$ 175	$ 175	$ 175	$ 175	$ 175	$ 175	$ 175	$ 175
Hourly Rates for Paint and Body Services	Hourly Rate	cost	$ 175	$ 175	$ 175	$ 175	$ 175	$ 175	$ 175	$ 175	$ 175
Hourly Service Rates for Maintenance and Repairs	Hourly Rate	cost	$ 175	$ 175	$ 175	$ 175	$ 175	$ 175	$ 175	$ 175	$ 175
DOT Inspections	Percent of Discount off Printed/Published Price Sheets	Percent	2 %	2 %	2 %	2 %	2 %	2 %	2 %	2 %	2 %
Training for Drivers	Hourly Rate	cost	$ 175	$ 175	$ 175	$ 175	$ 175	$ 175	$ 175	$ 175	$ 175
Training for Maintenance Personnel	Hourly Rate	cost	$ 175	$ 175	$ 175	$ 175	$ 175	$ 175	$ 175	$ 175	$ 175
Replacement Parts, Materials and Supplies	Percent of Discount off Printed/Published Price Sheets	Percent	2 %	2 %	2 %	2 %	2 %	2 %	2 %	2 %	2 %
Maintenance Service Plans	Percent of Discount off Printed/Published Price Sheets	Percent	2 %	2 %	2 %	2 %	2 %	2 %	2 %	2 %	2 %
Extended Warranty	Percent of Discount off Printed/Published Price Sheets	Percent	2 %	2 %	2 %	2 %	2 %	2 %	2 %	2 %	2 %
Vehicle Delivery Cost	Cost per mile from Dealer to CES Member	cost	$ 2.5	$ 2.5	$ 2.5	$ 2.5	$ 2.5	$ 2.5	$ 2.5	$ 2.5	$ 2.5
Emergency Road Side Service	Cost per mile	cost	$ 2.5	$ 2.5	$ 2.5	$ 2.5	$ 2.5	$ 2.5	$ 2.5	$ 2.5	$ 2.5
Emergency Road Side Service	Hourly Rate	cost	$ 215	$ 215	$ 215	$ 215	$ 215	$ 215	$ 215	$ 215	$ 215
Used Body Pricing shall be based upon Dealer acquisition price + cost to comply to Federal and NMDOT safety standards + body service +transportation + dealer markup not to exceed a maximum of XX.XX%	Dealer Markup not to exceed a maximum of XX.XX%	Percent	25 %	25 %	25 %	25 %	25 %	25 %	25 %	25 %	25 %
Offeror's Support for CES Pricing	Offerors Support for CES Pricing, Percent of difference between CES price and individual entity price from Form "Offeror Support for CES" that was uploaded to Response Format under Mandatory Response Section - General Response.	Percent	2 %	2 %	2 %	2 %	2 %	2 %	2 %	2 %	2 %
Alternative Costing O/P	Alternative Methods of Costing - Specialized/Custom- percent of overhead/markup and profit added to cost	Percent	25 %	25 %	25 %	25 %	25 %	25 %	25 %	25 %	25 %
Alternative Costing CES Discount	Discounts Offered Off Alternative Costing Methods (cost plus profit and overhead) Less Rate of Discount	Percent	0 %	0 %	0 %	0 %	0 %	0 %	0 %	0 %	0 %

Ferrara - CES Price Schedule			CES 2% Discount	CES MEMBER PRICE
Aerials				
CES-01	Cinder, 4-Door Full-Tilt OEM Cab, Extruded Aluminum Body, Single Axle, 57' Rear Mounted	Discontinued		
CES-02	Igniter, 4-Door Full-Tilt OEM Cab, Extruded Aluminum Body, Single Axle, 57' Rear Mounted	Discontinued		
CES-03	Inferno, 4-Door Full-Tilt OEM Cab, Extruded Aluminum Body, Single Axle, 57' Rear Mounted	Discontinued		
CES-04	Cinder, 4-Door Full-Tilt OEM Cab, Extruded Aluminum Body, Single Axle, 77' Rear Mounted	$1,763,544	$ (35,271)	$ 1,728,273
CES-05	Igniter, 4-Door Full-Tilt OEM Cab, Extruded Aluminum Body, Single Axle, 77' Rear Mounted	$1,854,154	$ (37,083)	$ 1,817,071
CES-06	Inferno, 4-Door Full-Tilt OEM Cab, Extruded Aluminum Body, Single Axle, 77' Rear Mounted	$1,921,839	$ (38,437)	$ 1,883,402
CES-07	Inferno, 4-Door Full-Tilt OEM Cab, Extruded Aluminum Body, Tandem Axle, 107' Rear Mounted	$2,113,616	$ (42,272)	$ 2,071,344
CES-08	Inferno, 4-Door Full-Tilt OEM Cab, Extruded Aluminum Body, Tandem Axle, 100' Rear Mounted	$2,391,266	$ (47,825)	$ 2,343,441
CES-09	Inferno, 4-Door Full-Tilt OEM Cab, Extruded Aluminum Body, Tandem Axle, 100' Mid-Mounted	$2,631,812	$ (52,636)	$ 2,579,176
CES-10	Inferno, 4-Door Full-Tilt OEM Cab, Aluminum Body, Tandem Axle, 100' Tractor Drawn	$2,738,815	$ (54,776)	$ 2,684,039
Pumper Fire Apparatus				
CES-11	Freightliner M2, 4-Door, Extruded Aluminum Body, Single Axle, 1250 GPM Pump, Mid-Mounted Pumper	$588,377	$ (11,768)	$ 576,609
CES-12	FC94, 4-Door, Extruded Aluminum Body, Single Axle, 1250 GPM Pump, Mid-Mounted Pumper	$848,256	$ (16,965)	$ 831,291
CES-13	Custom Cinder, 4-Door, Full-Tilt Cab, Extruded Aluminum Body, Single Axle, 1500 GPM Pump,	$963,298	$ (19,266)	$ 944,032
CES-14	Custom Igniter, 4-Door, Full-Tilt Cab, Extruded Aluminum Body, Single Axle, 1500 GPM Pump,	$1,049,914	$ (20,998)	$ 1,028,916
CES-15	Custom Inferno, 4-Door, Full-Tilt Cab, Extruded Aluminum Body, Single Axle, 1500 GPM Pump,	$1,070,840	$ (21,417)	$ 1,049,423
Rescues				
CES-16	Ford 550, 2-door Cab, Single Axle, Extruded Aluminum Body, NON-Walk-In LIGHT	$359,819	$ (7,196)	$ 352,623
CES-17	Ford 550, 2-door Super Cab, Single Axle, Extruded Aluminum Body, NON-Walk-In LIGHT Rescue	$331,022	$ (6,620)	$ 324,402
CES-18	Ford 550, 4-door Cab, Single Axle, Extruded Aluminum Body, NON-Walk-In LIGHT	$340,240	$ (6,805)	$ 333,435
CES-19	Freightliner M2, 2-door Cab, Single Axle, Extruded Aluminum Body, NON-Walk-In MEDIUM	$718,884	$ (14,378)	$ 704,506

CES-20	Freightliner M2, 4-door Cab, Single Axle, Extruded Aluminum Body, NON-Walk-In MEDIUM	$744,534	$	(14,891)	$	729,643
CES-21	Freightliner M2, 2-door Cab, Single Axle, Extruded Aluminum Body, Walk-In MEDIUM	$939,360	$	(18,787)	$	920,573
CES-22	Freightliner M2, 4-door Cab, Single Axle, Extruded Aluminum Body, Walk-In MEDIUM	$966,720	$	(19,334)	$	947,386
CES-23	Cinder, 4-Door, Full-Tilt, OEM Cab, Single Axle, Extruded Aluminum Body, NON Walk-In	$1,322,400	$	(26,448)	$	1,295,952
CES-24	Cinder, 4-Door, Full-Tilt, OEM Cab, Single Axle, Extruded Aluminum Body, Walk-In HEAVY	$1,479,264	$	(29,585)	$	1,449,679
CES-25	Igniter, 4-Door, Full-Tilt, OEM Cab, Single Axle, Extruded Aluminum Body, NON Walk-In	$1,450,080	$	(29,002)	$	1,421,078
CES-26	Igniter, 4-Door, Full-Tilt, OEM Cab, Single Axle, Extruded Aluminum Body, Walk-In HEAVY	$1,586,880	$	(31,738)	$	1,555,142
CES-27	Inferno, 4-Door, Full-Tilt, OEM Cab, Single Axle, Extruded Aluminum Body, NON Walk-In	$1,667,136	$	(33,343)	$	1,633,793
CES-28	Inferno, 4-Door, Full-Tilt, OEM Cab, Single Axle, Extruded Aluminum Body, Walk-In HEAVY	$1,809,408	$	(36,188)	$	1,773,220
Pumper/Tankers, Tankers and Wildland						
CES-29	M2 Freightliner, 2-Door, Extruded Aluminum Body, Tandem Axle, 1250 GPM Pump, Mid-Mounted Pumper/Tanker (3000 Gallons)	$671,831	$	(13,437)	$	658,394
CES-30	M2 Freightliner, 4-Door, Extruded Aluminum Body, Tandem Axle, 1250 GPM Pump, Mid-Mounted Pumper/Tanker (3000 Gallons)	$699,829	$	(13,997)	$	685,832
CES-31	Custom Cinder 2, 4-Door, Extruded Aluminum Body, Tandem Axle, 1250 GPM Pump, Mid-	$1,117,031	$	(22,341)	$	1,094,690
CES-32	Custom Igniter, 4-Door, Extruded Aluminum Body, Tandem Axle, 1250 GPM Pump, Mid-Mounted Pumper/Tanker (3000 Gallons)	$920,325	$	(18,407)	$	901,919
CES-33	Custom Inferno, 4-Door, Extruded Aluminum Body, Tandem Axle, 1250 GPM Pump, Mid-Mounted Pumper/Tanker (3000 Gallons)	$1,150,405	$	(23,008)	$	1,127,397
CES-34	Brush Truck, 2-Door, Aluminum Flat Bed, Single Axle, Ford F-550 4x4	$344,182	$	(6,884)	$	337,298
CES-35	Brush Truck, 2-Door, Aluminum Flat Bed, Single Axle, Dodge 5500 4x4	$350,177	$	(7,004)	$	343,173
CES-36	Brush Truck, 2-Door, Aluminum Flat Bed, Single Axle, Chevy 5500 4x4	$347,021	$	(6,940)	$	340,081

Docusign Envelope ID: B69E7954-A830-4D78-AF50-806A2ADA6A8E

NEW MEXICO CAPITAL OUTLAY GRANT AGREEMENT
CAPITAL APPROPRIATION PROJECT

THIS AGREEMENT is made and entered into by and between the State of New Mexico, Department of Finance & Administration, 407 Galisteo Street, Santa Fe, NM 87501, ("**Department**") and the City of Santa Fe, ("**Grantee**") (individually "**Party**" and collectively "**Parties**"). This Agreement shall be effective as of the date the Department executes it ("**Effective Date**").

WITNESSETH

WHEREAS, in the Laws of 2025, Chapter 159, Section 495, Paragarph 33, the Legislature made an appropriation to the Department, funds from which the Department is making available to the Grantee pursuant to this Agreement; and

WHEREAS, the Department is granting to Grantee, and the Grantee is accepting the grant of funds from this appropriation, in accordance with the terms and conditions of this Agreement;

NOW, THEREFORE, in consideration of the mutual covenants and obligations contained herein, the parties hereby mutually agree as follows:

AGREEMENT

I. PROJECT DESCRIPTION, GRANT AMOUNT, AND REVERSION

A. **25-J3150** ("**Project**") 6/30/2027 ("**Reversion Date**"). Laws of 2025, Chapter 159, Section 49533, Five Hundred Twenty Five Thousand Dollars and No Cents, $525,000.00, to purchase and equip a fire engine for the fire department in Santa Fe in Santa Fe county;.

B. Grantee's total reimbursements shall not exceed $525,000.00 Five Hundred Twenty Five Thousand Dollars and No Cents, ("**Appropriation Amount**") minus the allocation for Art in Public Places ("**AIPP amount**"), if applicable, $0.00 No Dollars and No Cents, which equals $525,000.00 Five Hundred Twenty Five Thousand Dollars and No Cents ("**Adjusted Appropriation Amount**").

C. In the event of a conflict among the Appropriation Amount, the Reversion Date, as defined herein and/or the purpose of the Project, as set forth in this Agreement, and the corresponding appropriation language in the laws cited above in this Article I, the language of the laws cited herein shall control.

The information contained in Article I is referred to collectively as the "**Project Description**."

II. DISBURSEMENT LIMITATION

A. Upon the Effective Date, the Grantee shall submit to the Department a comprehensive procurement plan and expenditure plan, detailing a Project timeline with milestones, required procurements, and identifying expected expenditures per milestone (collectively, "**Project Budget**"). The Department shall review and approve the Project Budget by approving a Notice of Department's Obligation ("**Notice of Obligation**"), in accordance with the Project Description, a sample of which is attached hereto as **Exhibit B** and incorporated herein by reference. After

Docusign Envelope ID: B69E7954-A830-4D78-AF50-806A2ADA6A8E

receipt of approved Notice of Obligation, the Grantee may be reimbursed for allowable costs up to the Adjusted Appropriation Amount. This Agreement and any reimbursements up to the Adjusted Appropriation Amount are expressly conditioned upon the following:

a. Irrespective of any Notice of Obligation, Grantee's expenditures shall be made in accordance with the Project Budget, on or before the Reversion Date and/or, if applicable, any Early Termination Date; and
b. The total amount received by Grantee shall not exceed the lesser of:
    i. the Adjusted Appropriation Amount identified in Article I (B) herein; or
    ii. the total of all amounts stated in the Notice(s) of Obligation evidencing the Department has received and accepted Grantee's Third Party Obligation(s); and
c. Grantee's expenditures are made and accounted for pursuant to the State Procurement Code, State's Model Accounting Practices, and execution of binding written obligations or purchase orders with third-party contractors or vendors for the provision of services, including professional services, or the purchase of tangible personal property and real property for the Project ("**Third Party Obligations**"); and
d. Grantee's submittal of timely Requests for Payment and supporting documentation in accordance with the procedures set forth in this Agreement; and
e. In the event capital assets acquired with Project funds are to be sold, leased, or licensed to or operated by a private entity, the sale, lease, license, or operating agreement:
    i. must be approved by the applicable oversight entity (if any) in accordance with §§ 13-6-2, 13-6-2.1, and 13-6-3; or
    ii. If no oversight entity is required to approve the transaction, the Department of Finance and Administration's Infrastructure Planning Development Division (IPDD) must approve it as complying with the law.

B. Prior to the sale, lease, license, or operating agreement being approved pursuant to Articles II(A)(e) (i) or (ii) herein, the Department may, in its sole and absolute discretion, unless inconsistent with State Board of Finance imposed conditions, reimburse Grantee for necessary expenditures incurred to develop the Project sufficiently to make the sale, lease, license, or operating agreement commercially feasible, limited to planning and design expenditures; and

C. Grantee's submission of documentation of all Third Party Obligations and amendments thereto (including terminations) to the Department and the Department's issuance of a Notice of Obligation for a particular amount in accordance with the terms of this Agreement shall be governed by the following:

a. Grantee is authorized to budget the particular amount set forth in the Notice of Obligation, execute the Third Party Obligation, and request the Third Party to begin work after issuance of a Notice of Obligation by the Department.
b. Grantee acknowledges and agrees that any Third Party Obligations agreed to prior to receiving a Notice of Obligation are its sole responsibility.
c. Grantee shall submit to the Department one copy of all Third Party Obligations and amendments thereto (including terminations) as soon as possible after execution by the Third Party but prior to execution by the Grantee.
d. Department may, in its sole and absolute discretion, issue a Notice of Obligation for the particular amount of a Third Party Obligation that only obligates the Department to reimburse Grantee's expenditures made on or before the Reversion Date or an Early

Docusign Envelope ID: B69E7954-A830-4D78-AF50-806A2ADA6A8E

Termination Date. The current Notice of Obligation form is incorporated herein and attached hereto as **Exhibit B**.

D. Grantee shall provide all necessary qualified personnel, materials, and facilities to implement the Project. The Grantee shall finance its share (if any) of the costs of the Project, including all Project overruns.

E. Prior to entering into this Agreement, the Department conducted a risk assessment on the Grantee and a project readiness review for the Project. In accordance with State Model Accounting Practices, FIN 9.2, if the Department determines that the expenditure of Project funds by the Grantee requires special conditions, those conditions are identified and listed in **Exhibit C**, which is attached and incorporated by reference. The Parties agree that, to the extent the Department, in its sole and absolute discretion, determines additional special conditions are necessary or that existing special conditions are no longer required, it may update **Exhibit C** from time to time without the need for a formal amendment of this Agreement.

F. Project funds shall not be used for purposes other than those authorized by the Department in accordance with the Project Description.

G. Project funds cannot be used to reimburse the Grantee for indirect Project costs unless specifically allowed by law.

III. NOTICES

The following provisions shall apply whenever written notices, including written decisions, are to be given or received related to this Agreement.

A. The Grantee designates the person(s) listed below, or their successor, as their official representative(s) concerning all matters related to this Agreement:

Grantee: City of Santa Fe
Name: Alan Webber
Title: Mayor
Address: PO Box 909, Santa Fe, NM 87504
Email: mayor@santafenm.gov
Telephone: 505-955-6590

B. The Grantee designates the person(s) listed below, or their successor, as their Fiscal Officer or Fiscal Agent concerning all matters related to this Agreement:

Grantee: City of Santa Fe
Name: Emily Oster
Title: Finance Director
Address: PO Box 909, Santa Fe, NM 87504
Email: ekoster@santafenm.gov
Telephone: 505-629-3411

Docusign Envelope ID: B69E7954-A830-4D78-AF50-806A2ADA6A8E

C. The Department designates the persons listed below, or their successors, as the Points of Contact for matters related to this Agreement.

Department: DFA/Local Government Division
Name: Daniel Catanach
Title: Grant Manager
Address: Bataan Memorial Bldg. Rm 202, Santa Fe NM 87501
Email: danieln.catanach@dfa.nm.gov
Telephone: 505-231-6090

The Parties agree that all notices, including written decisions, related to this Agreement shall be sent to the persons named above by email or regular mail. For mailings, notices shall be deemed to have been given and received upon the date of the receiving party's actual receipt or five (5) calendar days after mailing, whichever shall first occur. In the case of email transmissions, the notice shall be deemed to have been given and received on the date reflected on the delivery receipt of the email.

IV. TERM & DEADLINE TO EXPEND FUNDS

A. The term of this Agreement shall begin on the Effective Date and terminate on the 30th day of June during the calendar year of the Reversion Date unless Terminated Before Reversion Date ("**Early Termination**") pursuant to Article V herein (collectively "**Term**").

B. The Project's funds must be expended on or before the Reversion Date and, if applicable, the Early Termination Date of this Agreement.

a. For purposes of this Agreement, it is not sufficient for the Grantee to encumber the Project funds on its books on or before the Reversion Date or Early Termination Date.
b. For purposes of this Agreement, an expenditure of funds has occurred on the date the particular quantity of goods is delivered to and received by the Grantee, title to the goods is transferred to the Grantee, and/or as of the date particular services are rendered to and accepted by the Grantee.
c. For purposes of this Agreement, an encumbrance of funds pursuant to a contract or purchase order with a third party does not qualify as an expenditure.

V. EARLY TERMINATION

A. General Provision. The Department may terminate this Agreement before the Reversion Date based on the Completion of the Project, Complete Expenditure of the Adjusted Appropriation, and/or Violation of this Agreement. Early Termination hereunder includes:

a. Termination due to completion of the Project before the Reversion Date;
b. Termination due to complete expenditure of the Adjusted Appropriation Amount before the Reversion Date;
c. Termination for violation of the terms of this Agreement; or
d. Termination for suspected mishandling of public funds, including but not limited to fraud, waste, abuse, and conflicts of interest.

Docusign Envelope ID: B69E7954-A830-4D78-AF50-806A2ADA6A8E

B. Non-appropriation. This Agreement is expressly contingent upon the New Mexico State Legislature making sufficient appropriations and authorizations for the Project Description.

   a. If the Legislature does not appropriate the Appropriation Amount, this Agreement shall terminate upon the Department giving the Grantee written notice of such termination. Such termination shall be effective as of the effective date of the law making the non-appropriation.
      i. The Department's decision as to whether sufficient appropriations or authorizations are available shall be final. Grantee hereby waives any rights to assert an impairment of contract claim against the State of New Mexico in the event of Early Termination of this Agreement.
   b. As used herein, "non-appropriate" or "non-appropriation" includes the following actions by the New Mexico Legislature:
      i. Deauthorization, reauthorization, or revocation of a prior authorization.

C. Grant Disbursements in the Event of Early Termination. In the event of Early Termination, the Department's sole and absolute obligation to reimburse the Grantee is expressly conditioned upon the limitations set forth in Article II above.

D. Notice. Either Party may terminate this Agreement prior to the Reversion Date by providing the other Party with a minimum of fifteen (15) days advance written notice of the Early Termination. Grantee hereby waives any rights to assert an impairment of contract claim against the State of New Mexico in the event of Early Termination of this Agreement by the Department.

VI. SUSPENSION OF NEW OR FURTHER OBLIGATIONS

A. Department, in its sole and absolute discretion, may provide written notice to Grantee to suspend entering into further obligations. Upon the receipt of such written notice by the Grantee:

   a. Grantee shall immediately suspend entering into new or further written obligations with third parties;
   b. Department will suspend the issuance of any new or further Notice of Obligation under this Agreement; and
   c. Department may direct the Grantee to implement a corrective action plan in accordance with Article VI (D) herein.

B. In the event of Suspension of this Agreement, the Department's sole and absolute obligation to reimburse the Grantee is expressly conditioned upon the limitations set forth in Article II herein.

C. A suspension of new or further obligations under this Agreement shall remain in effect unless or until the date the Grantee receives written notice given by the Department informing the Grantee that the Suspension has been lifted or that the Agreement has been Early Terminated in accordance with Article V herein. If the Suspension is lifted, the Department will consider further requests for a Notice of Obligation.

D. Corrective Action Plan in the Event of Suspension. Where the Department, in its sole and absolute discretion, directs Grantee to suspend entering into new or further written obligations

Docusign Envelope ID: B69E7954-A830-4D78-AF50-806A2ADA6A8E

with third parties pursuant to Article VI(A), the Department may, but is not obligated to, require the Grantee to develop and implement a written corrective action plan to remedy the grounds for the Suspension.

a. Such a corrective action plan must be approved by the Department and be signed by the Grantee.
b. Failure to sign a corrective action plan or meet the terms and deadlines set forth in the signed corrective action plan is hereby deemed a violation of the terms of this Agreement for purposes of Early Termination, Article V(A)(c).
c. A corrective action plan shall be in addition to, and not in lieu of, any other equitable or legal remedy authorized hereunder or at law, including but not limited to Early Termination.

VII. AMENDMENTS

Unless expressly stated otherwise herein, this Agreement shall not be altered, changed, or amended except by an instrument in writing duly executed by both parties hereto with the same formalities as this agreement.

VIII. REPORTING

A. Database Reporting

a. Grantee shall provide the Department with quarterly reports of Project activity, entering the required Project information directly into a database required by the Department.
b. Additionally, Grantee shall certify on each Request for Payment form, attached hereto as **Exhibit A** and incorporated herein, that all information provided in the database is true and accurate, updates to the database have been maintained, and all Project activity complies with applicable law and the terms of this Agreement.
c. Grantee hereby acknowledges that failure to perform and/or certify updates to the database will jeopardize the reimbursement of funds. The Department shall give Grantee a minimum of fourteen (14) days' advance written notice of any changes to the information the Grantee is required to report.
d. At the Department's discretion, all reports required hereunder may be directed to and facilitated through an electronic database.
e. Quarterly reports shall be due on the last day of the month, that is, 30 days prior to the end of the quarter following the execution of this Agreement by the Department and ending during the quarter of the submission of the final request for reimbursement for the Project, or the following quarter.

B. Requests for Additional Information/Project Inspection

During the term of this Agreement and during the period of time during which the Grantee must maintain records pursuant to Article VIII, the Department may:

i. request such additional information regarding the Project as it deems necessary; and
ii. conduct, at reasonable times and upon reasonable notice, onsite inspections of the Project.

Docusign Envelope ID: B69E7954-A830-4D78-AF50-806A2ADA6A8E

Grantee shall respond to such requests for additional information within a reasonable period of time, as established by the Department.

B. Requests for Additional Information/Project Inspection

a. During the term of this Agreement and the Record Retention Period, the Department may:
   i. Request additional information regarding the Project as it deems necessary and
   ii. Conduct on-site inspections of the Project at reasonable times and upon reasonable notice.
b. Grantee shall respond to such requests for additional information within the time established by the Department.

IX. REQUEST FOR PAYMENT PROCEDURES

A. Grantee shall request payment by submitting the form attached hereto as **Exhibit A**. Payment requests are subject to the following procedures:

a. Each Request for Payment must be in accordance with the Project Budget and contain proof of payment by the Grantee or liabilities incurred by the Grantee.
   i. Proof of payment must demonstrate the validity of an expenditure or liabilities incurred by Grantee.
   ii. However, Grantee may be reimbursed for unpaid liabilities only if the Department, in its sole and absolute discretion, agrees to do so and in accordance with any special conditions imposed by the Department.
   iii. The Grantee shall make payment to those contractors or vendors within five (5) business days from the date of receiving reimbursement from the Department or in a shorter period than the Department may prescribe in writing.
   iv. The Department reserves the right to make such payments directly to the contractors or vendors as a special condition under this Agreement.
   v. The Grantee is required to certify to the Department proof of payment to the third-party contractor or vendor within five (5) business days from the date the Department reimburses the Grantee.

B. Until the Project is fully planned, designed, and all necessary procurements identified in the Project Budget are completed, Grantee's reimbursements will be limited to the planning, design, and procurement costs outlined in the Project Budget. Once the planning, designing, and procuring stages are complete, the Grantee must obligate at least ten percent (10%) of the Adjusted Appropriation Amount within one (1) year and must have utilized at least eighty-five percent (85%) of the Adjusted Appropriation Amount six (6) months before the reversion date.

C. Deadlines. Grantee shall submit requests for Payments to the Department on the earlier of:

a. Immediately as Grantee receives them, but at a maximum of thirty (30) days from when Grantee incurred the expenditure or liability; or
b. Twenty (20) days from the date of Early Termination or Reversion Date for expenditures or liabilities incurred before the Early Termination date or Reversion Date.

Docusign Envelope ID: B69E7954-A830-4D78-AF50-806A2ADA6A8E

D. Grantee's failure to abide by the requirements set forth in Article II and Article IX herein may result in the denial of its Request for Payment. Department reserves the right to reject a payment request for the Project unless and until it is satisfied that the expenditures or liabilities are for permissible purposes within the meaning of the Project Description, identified within the Project Budget, and that the Grantee is otherwise in compliance with this Agreement.

a. Department's authority to reject any Request for Payment is in addition to, and not in lieu of, any other legal or equitable remedy available to the Department under this Agreement, at law, or in equity.

X. PROJECT CONDITIONS AND RESTRICTIONS

A. The following general conditions and restrictions shall apply to the Project:

a. The Project's funds must be spent in accordance with all applicable state laws, regulations, policies, and guidelines, including, but not limited to, the State Procurement Code.
b. The Project's expenditures and liabilities must be accounted for in accordance with the State's Model Accounting Practices, as amended from time to time.
c. The Project must be implemented in accordance with the New Mexico Public Works Minimum Wage Act, Section 13-4-10 through 13-4-17 NMSA 1978, as applicable.
d. The Project must provide a public benefit above and beyond any incidental benefit to private entities in accordance with applicable law, including, but not limited to, Article IX, Section 14 of the Constitution of the State of New Mexico.
e. Without prior written approval from the Department and State Board of Finance, for the useful life of any asset purchased under this Agreement, Grantee shall not convert any property acquired, built, renovated, repaired, designed, or developed with Project funds to uses other than those specified in the Project Description.
    i. In addition to other remedies available at law or in equity, any disposal or conversion of property acquired, built, renovated, repaired, designed, or developed with Project funds without the Department's and the Board of Finance's express written approval will trigger the Department's right to reimbursement from Grantee of the Appropriated Amount, transfer proceeds from any disposition of property to the State, or otherwise provide consideration to the State for the Appropriated Amounts.
f. Grantee shall comply with all applicable federal and state laws, rules, and regulations pertaining to civil rights and equal employment opportunity.
    i. In accordance with all such laws, rules, and regulations, the Grantee agrees to assure that no person shall, on the grounds of race, color, national origin, sex, sexual preference, age, or handicap, be excluded from participation in the Project, use of the Project, employment with Grantee, or otherwise be denied benefits/subject to discrimination for any activity performed under this Agreement.
g. Where the Department, in its sole and absolute discretion, determines Grantee has failed to comply with the above conditions and restriction, Grantee agrees to take appropriate steps to correct any deficiencies immediately. The Grantee's failure to implement such appropriate steps within a reasonable time, but no longer than thirty (30) days after

Docusign Envelope ID: B69E7954-A830-4D78-AF50-806A2ADA6A8E

notice from the Department, constitutes a breach of this Agreement and grounds for Early Termination.

XI. REPRESENTATIONS AND WARRANTIES

A. Reliance by Department.
   a. Grantee expressly acknowledges that the Department relies on the representations and warranties made by Grantee in this Agreement. Grantee acknowledges that such representations and warranties are a material inducement for the Department to enter into this Agreement and provide the Appropriated Amount.
   b. Grantee shall ensure all representations and warranties provided herein are true, accurate, and complete as of the date of the Effective Date and shall remain so throughout the Term of this Agreement. Grantee is responsible for promptly notifying the Department in writing of any changes or inaccuracies in the representations and warranties contained herein.

B. Grantee hereby represents and warrants the following:

   a. Grantee has taken all necessary steps to attain the legal authority to receive and expend the Project's funds.
   b. Grantee has duly authorized this Agreement, and the person executing it has authority to do so. Once executed by Grantee, this Agreement shall constitute a binding obligation of Grantee, enforceable according to its terms.
   c. Grantee's obligations hereunder do not conflict with any law, ordinance, or resolution applicable to Grantee, Grantee's charter (if applicable), or any judgment or decree to which Grantee is subject.
   d. Grantee has independently confirmed that the Project Description, including, but not limited to, the Appropriated Amount and Reversion Date, is consistent with the underlying appropriation in law.
   e. Grantee's governing body has duly adopted or passed as an official act a resolution, motion, or similar action authorizing the person identified as the official representative of the Grantee to sign and submit Requests for Payment on behalf of Grantee.
   f. Grantee will abide by New Mexico laws regarding conflicts of interest, governmental conduct, and whistleblower protection.
      i. Grantee agrees explicitly none of its officers or employees or its designees or agents, no member of the governing body, and no other public official of Grantee who exercises any function or responsibility with respect to this Agreement, shall have any interest, direct or indirect, in any contract or subcontract, or the proceeds thereof, for the Project.
      ii. Further, Grantee will require all of its contractors to incorporate the language set forth in this paragraph prohibiting conflicts of interest in all subcontracts.
   g. No funds have been paid or will be paid, by or on behalf of the Grantee, to any person for influencing or attempting to influence an officer or employee of the State, any agency, or body in connection with the awarding of any Third Party Obligation.
      i. Grantee will require certifying language prohibiting lobbying to be included in the award documents for all subawards, including subcontracts, loans, and cooperative agreements.

Docusign Envelope ID: B69E7954-A830-4D78-AF50-806A2ADA6A8E

C. Consequences of False or Misleading Representations. If any representation or warranty made by Grantee is found to be false or misleading, the Department shall have the right to exercise any or all of the following remedies:

a. **Termination of Agreement:** Department may terminate this Agreement immediately upon written notice to the Grantee.
b. **Repayment of Grant Funds:** Grantee shall repay all Appropriated Amounts disbursed under this Agreement, upon demand by the Department.
c. **Other Remedies:** Department may pursue any other remedies available at law or in equity.

D. Survival of Representations and Warranties. The representations and warranties made by the Grantee shall survive the Early Termination or expiration of this Agreement.

XII. PROJECT RECORDS

A. Grantee shall be strictly accountable for receipts and disbursements relating to the Project's funds. The Grantee shall follow generally accepted accounting principles and the State's Model Accounting Practices and, if feasible, maintain a separate bank account or fund with a separate organizational code to ensure separate budgeting and accounting of the funds.

B. For six (6) years following the Project's completion ("**Record Retention Period**"), Grantee shall maintain all Project-related records, including, but not limited to, all financial records, requests for proposals, invitations to bid, selection and award criteria, contracts and subcontracts, advertisements, minutes of pertinent meetings, as well as records sufficient to fully account for the amount and disposition of the Appropriated Amount from all sources budgeted for the Project, the purpose for which such funds were used, and such other records as the Department may prescribe.

C. Grantee shall make all Project records available to the Department, the Department's Independent Public Accountant, and the New Mexico State Auditor upon request. With respect to the funds that are the subject of this Agreement, if the State Auditor or the Department finds any funds were improperly expended, Grantee shall be required to reimburse the State all amounts found to be improperly expended.

XIII. IMPROPERLY REIMBURSED FUNDS

If the Department determines part or all of the Appropriation Amount was improperly reimbursed to Grantee, including but not limited to funds reimbursed to Grantee based upon fraud, mismanagement, misrepresentation, misuse, violation of law by the Grantee, after ten (10) days' notice to Grantee and the opportunity to return such funds to the Department, the Department may offset any funds due to Grantee from the State, until the Appropriation Amount is fully repaid.

XIV. LIABILITY

Neither Party shall be responsible for liability incurred as a result of the other Party's acts or omissions in connection with this Agreement. Any liability incurred in connection with this Agreement is subject to

Docusign Envelope ID: B69E7954-A830-4D78-AF50-806A2ADA6A8E

immunities and limitations of the New Mexico Tort Claims Act.

XV. SCOPE OF AGREEMENT

This Agreement constitutes the entire and exclusive agreement between the Parties concerning the subject matter hereof. The Agreement supersedes all prior or contemporaneous agreements, understandings, discussions, communications, and representations, written or verbal.

XVI. REQUIRED NON-APPROPRIATIONS CLAUSE

A. Grantee acknowledges and agrees to include a "non-appropriations" clause in all contracts between it and other parties that are (i) funded in whole or part by funds made available under this Agreement and (ii) entered into after the effective date of this Agreement that states:

   a. "The terms of this Agreement are contingent upon sufficient appropriations and authorization being made by the Legislature of the State of New Mexico ("**Legislature**") for the performance of this Agreement.
   b. If the Legislature does not make sufficient appropriations and authorization, City of Santa Fe may immediately terminate this Agreement by giving Contractor written notice of such termination.
   c. The City of Santa Fe's decision as to whether sufficient appropriations are available shall be final and accepted by the Contractor. Contractor hereby waives any rights to assert an impairment of contract claim against the City of Santa Fe or the State of New Mexico in the event of immediate or Early Termination of this Agreement by the City of Santa Fe or the State Department of Finance and Administration."

XVII. REQUIRED TERMINATION CLAUSE

A. Grantee acknowledges and agrees to include the following termination clause in all contracts that are (i) funded in whole or part by funds made available under this Agreement and (ii) entered into after the effective date of this Agreement:

   a. "This contract is funded in whole or in part by funds made available by the State of New Mexico ("**State**"). Should the State terminate its Agreement with the City of Santa Fe, the City of Santa Fe may terminate this contract immediately by providing Contractor written notice of such termination.
   b. In the event of termination pursuant to this paragraph, the City of Santa Fe's only liability to Contractor shall be for goods and services delivered and accepted prior to the termination date."

XVIII. COMPLIANCE WITH UNIFORM FUNDING CRITERIA

A. Throughout the term of this Agreement, Grantee shall:

   a. Submit all reports of annual audits and agreed-upon procedures required by § 12-6-3(A)-(B), NMSA 1978 by the due dates established in § 2.2.2 NMAC, reports of which must be a

Docusign Envelope ID: B69E7954-A830-4D78-AF50-806A2ADA6A8E

public record pursuant to § 12-6-5(A), NMSA 1978 within forty-five (45) days of delivery to the State Auditor;

b. Have a duly adopted budget for the current fiscal year approved by its budgetary oversight agency (if any);
c. Timely submit all required financial reports to its budgetary oversight agency (if any); and
d. Use accounting methods and procedures consistent with Generally Accepted Accounting Principles and the State's Model Accounting Principals to expend the Appropriated Amount in accordance with applicable law and account for and safeguard Project funds and assets acquired with Project funds.

B. In the event Grantee fails to comply with the requirements of subparagraph A of this Article XVIII, Department may take one or more of the following actions:

a. Suspend new or further obligations pursuant to Article VI(A) of this Agreement;
b. Require the Grantee to develop and implement a written corrective action plan pursuant to Article VI(D) of this Agreement to remedy the non-compliance;
c. Impose special conditions to address the non-compliance by giving Grantee notice of such special conditions in accordance with Article III of this Agreement;
    i. The Parties agree that any special conditions imposed to address non-compliance shall be incorporated into this Agreement, through **Exhibit C**, upon notice to Grantee, without need for formal amendment of this Agreement;
    ii. Special conditions shall be binding and effective on the date that notice is deemed to have been given pursuant to Article III or
d. Terminate this Agreement pursuant to Article V(A) of this Agreement.

XIX. SEVERANCE TAX AND GENERAL OBLIGATION BONDS

A. Grantee acknowledges and agrees that the underlying appropriation for the Project may originate from the issuance of tax-exempt severance tax bonds or general obligation bonds by the State. Proceeds from such bonds are administered by the New Mexico State Board of Finance ("**SBOF**"), an entity separate and distinct from the Department.

a. Grantee acknowledges and agrees:
    i. It is Grantee's responsibility to determine through SBOF what (if any) conditions are currently imposed on the Project;
    ii. Department's failure to inform Grantee of an SBOF-imposed condition does not affect the validity or enforceability of the condition;
    iii. The SBOF may in the future impose further or different conditions upon the Project;
    iv. All SBOF conditions are attached to the Project and Appropriation Amount without the need for formal amendment of this Agreement;
    v. All applicable SBOF conditions must be satisfied before the SBOF will release to the Department funds subject to the condition(s) and
    vi. The Department's obligation to reimburse Grantee from the Project is expressly contingent upon the satisfaction of the then-current SBOF conditions.

B. Grantee acknowledges and agrees SBOF may, at its sole and absolute discretion, require reimbursement or remove eligibility for bond proceeds for the Project if the Project doesn't

Docusign Envelope ID: B69E7954-A830-4D78-AF50-806A2ADA6A8E

proceed sufficiently.

a. Grantee must comply with the requirement to encumber five percent (5%) of Project funds within six months of bond issuance as certified by Grantee in the Bond Questionnaire and Certification documents submitted to the SBOF.
b. Failure to comply may result in the reassignment of the bond proceeds. Upon reassignment of bond proceeds, this Agreement will be suspended until the entity has demonstrated readiness as determined by the SBOF and the Department.

C. Grantee acknowledges and agrees that this Agreement is subject to the SBOF's Bond Project Disbursements rule, § 2.61.6, NMAC, as may be amended from time to time or re-codified.

XX. GENERAL PROVISIONS

A. Assignment: Grantee's rights and obligations under this Agreement are personal and may not be transferred or assigned without the prior written consent of the State. Any attempt at assignment or transfer without such consent shall be void. Any assignment or transfer of Grantee's rights and obligations approved by the State shall be subject to the provisions of this Agreement.

B. Subcontractors: Grantee shall not enter any subgrant or subcontract in connection with its obligations under this Agreement without the prior written approval of the State. Upon request, Grantee shall submit to the Department a copy of each such subgrant or subcontract.

C. Binding Effect: Except as otherwise provided, all provisions of this Agreement, including the benefits and burdens, shall extend to and be binding upon the Parties' respective successors and assigns.

D. Authority: Each Party represents and warrants to the other that the execution and delivery of this Agreement and the performance of such Party's obligations have been duly authorized.

E. Captions and References: The captions and headings in this Agreement are for the convenience of reference only and shall not be used to interpret, define, or limit its provisions. All references in this Agreement to sections (whether spelled out or using the § symbol), subsections, exhibits, or other attachments are references to sections, subsections, exhibits, or other attachments contained herein or incorporated as a part hereof, unless otherwise noted.

F. Counterparts: This Agreement may be executed in multiple, identical, original counterparts, each of which shall be deemed to be an original, but all of which, taken together, shall constitute the same agreement.

G. Digital Signatures: If any signatory signs this agreement using a digital signature in accordance with the State Policies regarding the use of digital signatures, then any agreement or consent to use digital signatures within the electronic system through which that signatory signed shall be incorporated into this Agreement by reference.

H. Modification: Except as otherwise provided in this Agreement, any modification to this Agreement shall only be effective if agreed to in a formal amendment, properly executed and approved in accordance with applicable New Mexico law and State fiscal policies and rules.

Docusign Envelope ID: B69E7954-A830-4D78-AF50-806A2ADA6A8E

Modifications permitted under this Agreement, other than Agreement amendments, shall conform to the policies issued by the State.

I. Statutes, Regulations, Fiscal Rules, and Other Authority: Any reference in this Agreement to a statute, regulation, policy, or other authority shall be interpreted to refer to such authority then current, as may have been changed or amended after the Effective Date of this Agreement.

J. External Terms and Conditions: Notwithstanding anything to the contrary herein, the State shall not be subject to any provision included in any terms, conditions, or agreements appearing on Grantee's or a subcontractor's website or any provision incorporated into any click-through or online agreements related to the Work unless that provision is specifically referenced in this Agreement.

K. Severability: The invalidity or unenforceability of any provision of this Agreement shall not affect the validity or enforceability of any other provision of this Agreement, which shall remain in full force and effect, provided that the Parties can continue to perform their obligations under this Agreement in accordance with its intent.

L. Survival of Certain Agreement Terms: Any provision of this Agreement that imposes an obligation on a Party after the termination or expiration of this Agreement shall survive the termination or expiration of this Agreement and shall be enforceable by the other Party.

M. Third Party Beneficiaries: Except for the Parties' respective successors and assigns described in this Agreement, it does not and is not intended to confer any rights or remedies upon any person or entity other than the Parties. Enforcement of this Agreement and all rights and obligations hereunder are reserved solely to the Parties. Any services or benefits that third parties receive as a result of this Agreement are incidental to this Agreement and do not create any rights for such third parties.

N. Waiver: A Party's failure or delay in exercising any right, power, or privilege under this Agreement, whether explicit or by lack of enforcement, shall not operate as a waiver, nor shall any single or partial exercise of any right, power, or privilege preclude any other or further exercise of such right, power, or privilege.

O. Standard and Manner of Performance: Grantee shall perform its obligations under this Agreement in accordance with the highest standards of care, skill, and diligence in Grantee's industry, trade, or profession.

P. Licenses, Permits, and Other Authorizations: Grantee shall secure, prior to the Effective Date, and maintain at all times during the term of this Agreement, at its sole expense, all licenses, certifications, permits, and other authorizations required to perform its obligations under this Agreement and shall ensure that all employees, agents, and subcontractors secure and maintain at all times during the term of their employment, agency or subcontractor, all license, certifications, permits and other authorizations required to perform their obligations in relation to this Agreement.

Q. Publicity: Any Publicity regarding the subject matter of this Agreement may not be released without prior written approval from the Department. For purposes of this agreement, "**Publicity**"

Docusign Envelope ID: B69E7954-A830-4D78-AF50-806A2ADA6A8E

means notices, informational pamphlets, press releases, email responses, research, reports, signs, and similar public notices prepared by or for the Grantee or jointly with others.

a. Grantee shall obtain written approval prior to issuing any press release or making any public announcement regarding this agreement. Grantee agrees to obtain approval of the Department in advance with respect to all Public Relations, all communications with media, or all communications with any other member of the public with respect to this agreement, except to acknowledge that an agreement does exist.
b. For purposes of this agreement, "Public Relations" includes community relations and means those activities dedicated to maintaining the Department's image or maintaining or promoting understanding and favorable relations with the community or public at large or any segment of the public.
c. Violations of either Article XX (Q)(a) or (b) shall constitute a material Breach of Agreement.

R. Data Sharing: The State intends to secure and collate specific data generated by Grantee under this Agreement to use in support of the State's organizational, policy-making, and management of public resource functions. State, in accordance with **Exhibit E**, attached hereto and incorporated herein by reference, reserves the right to require Grantee and/or its subcontractors to provide specific data relevant to the above-listed functions. Data provided by Grantee may be incorporated into existing or future developed State integrated analysis tools or databases, including but not limited to geographic information system (GIS) networks and databases accessible by the public. Dissemination of data collected may include historical data and projections based on such historical data.

a. To the extent any data transferred as part of this Agreement is legally determined to be the property of Subrecipient or its subcontractors, Subrecipient and/or its subcontractors grants State a nonexclusive, fully paid-up right and license to reproduce, use, distribute, do derivative works based on, and archive data transferred as part of this Agreement.

S. Venue and Choice of Law: This Agreement shall be governed by and construed in accordance with the laws of the State of New Mexico, without regard to any conflict of law provisions. Any legal suit, action, or proceeding arising out of or related to this Agreement shall be instituted exclusively in the district courts located in Santa Fe, New Mexico. The Parties hereby irrevocably submit to the exclusive jurisdiction and venue of such courts in any such suit, action, or proceeding. The Parties waive any objection to the laying of the venue of any such suit, action, or proceeding in the district courts of Santa Fe, New Mexico, and irrevocably waive and agree not to plead or claim in any such court that any such suit, action, or proceeding brought in any such court has been brought in an inconvenient forum.

[SIGNATURE PAGE AND EXHIBITS FOLLOW]
[THIS SPACE LEFT BLANK INTENTIONALLY]

Docusign Envelope ID: B69E7954-A830-4D78-AF50-806A2ADA6A8E

IN WITNESS WHEREOF, the parties have duly executed this Agreement as of the Department's date of execution.

APPROVED BY DEPARTMENT:

Cabinet Secretary, Wayne Propst:

Signed by:
6EB4D958A89A432...
Signature

11/21/2025
Date

Chief Financial Officer, Mackie Romero:

DocuSigned by:
6CA6727E89F840B...
Signature

11/21/2025
Date

Local Government Division Director, Cecilia Mavrommatis:

Signed by:
C7E9C597313E484...
Signature

11/21/2025
Date

AS TO LEGAL FORM AND SUFFICIENCY

General Counsel's Office:

Signed by:
8F9C3BE14553478...
Signature

George Hypolite
(Print Name)

General Counsel
(Title)

Docusign Envelope ID: B69E7954-A830-4D78-AF50-806A2ADA6A8E

APPROVED BY GRANTEE:

City of Santa Fe

Entity Name

Official with Authority to Bind Grantee:

Alan Webber (Nov 1, 2025 11:26:56 MDT)

Signature

Mayor

(Title)

Alan Webber

(Print Name)

11/01/2025

Date

ATTEST:

ANDREA SALAZAR (Nov 2, 2025 19:25:30 MST)

ANDRÉA SALAZAR, CITY CLERK

11/02/2025

Date

GB MTG 10-29-25

Fiscal Officer or Chief Financial Officer:

Emily K. Oster

EMILY OSTER, FINANCE DIRECTOR

10/07/2025

Date

As To Legal Form And Sufficiency

Kevin L. Nault

Kevin L. Nault (Aug 19, 2025 16:59:35 MDT)

KEVIN NAULT, ASSISTANT CITY ATTORNEY

Aug 19, 2025

Date

Docusign Envelope ID: B69E7954-A830-4D78-AF50-806A2ADA6A8E

EXHIBIT A

Request for Payment Form and Certification

STATE OF NEW MEXICO
GRANT APPROPRIATION
Request for Payment Form
Exhibit A

I. Grantee Information (Must match your DFA Substitute W-9 Form)

A. Grantee: _____
B. Address: _____
(Complete Mailing, including Suite, if applicable)
_____
City, State, Zip
C. Contact Name/Phone #: _____
D. Grant No: _____
E. Project Title: _____
F. Grant Expiration Date: _____

II. Payment Computation

A. Payment Request No. _____
B. Grant Amount: $ 0.00
C. AIPP Amount *(If Applicable)*: $ 0.00
D. Funds Requested to Date: $ 0.00
E. Amount Requested this Payment: _____
F. Reversion Amount *(if applicable)*: $ 0.00
G. Grant Balance: $ 0.00
H. ☐ Final Request for Payment *(if applicable)*

III. Fiscal Year : 2026 (July 1, 2025-June 30, 2026)

(The State of NM Fiscal Year is July 1, 20XX through June 30, 20XX of the following year)

IV. Certifications

☐ I hereby certify that all conditions and requirements for Payments outlined in the Agreement have been met, including but not limited to:
a. Submission and approval of a Project Budget as per Article IV, Section A of the Agreement.
b. Compliance with the Project Budget and expenditure of funds in accordance with the State Procurement Code and the State's Model Accounting Practices.
c. Submission of supporting documentation as required by the Agreement.
d. Maintenance of all necessary records and documentation as stipulated in the Agreement.

☐ I attest that the information provided is correct; expenditures are properly documented and valid or actual receipts, and that the activity fully complies with Article IX, Sec. 14 of the New Mexico Constitution, known as the "anti-donation" clause.

☐ I hereby certify that all representations and warranties made in the Agreement remain true, accurate, and complete as of the date of this request, and will continue to be so throughout the term of the Agreement. I acknowledge that these representations and warranties are a material inducement for the Department to approve this pay request.

_____ _____
Grantee Fiscal Officer or **Fiscal Agent** *(if applicable)* **Grantee Representative**

_____ _____
Printed Name Printed Name

Date: _____ Date: _____

(State Agency Use Only)

Vendor Code: _____ **Fund No.:** _____ **PO #** _____ **Loc No.:** _____

I certify that the State Agency financial and vendor file information agree with the above submitted information.

_____ _____
ASD Officer Date Division Grant Manager Date

Revised 7/2025

[THIS SPACE LEFT BLANK INTENTIONALLY]

Docusign Envelope ID: B69E7954-A830-4D78-AF50-806A2ADA6A8E

EXHIBIT B

Notice of Department's Obligation Form

NOTICE OF OBLIGATION TO REIMBURSE GRANTEE
EXHIBIT B

Notice of Obligation to Reimburse Grantee # _____

DATE: _____

TO: Department Representative: _____, Grant Manager

FROM: Grantee Entity: _____

Grantee Official Representative: _____

SUBJECT: Notice of Obligation to Reimburse Grantee

Grant Number: _____

Grant Termination Date: _____

As the designated representative of the Department for Grant Agreement number _____ entered into between Grantee and the Department, I certify that the Grantee has submitted to the Department the following third party obligation executed, in writing, by the third party's authorized representative:

Vendor or Contractor: _____

Third Party Obligation Amount: _____

Vendor or Contractor: _____

Third Party Obligation Amount: _____

I certify that the State is issuing this Notice of Obligation to Reimburse Grantee for permissible purposes within the scope of the project description, subject to all the terms and conditions of the above referenced Grant Agreement.

Grant Amount (Minus AIPP if applicable): _____

The Amount of this Notice of Obligation: _____

The Total Amount of all Previously Issued Notices of Obligation: _____

The Total Amount of all Notices of Obligation to Date: $ 0.00

Note: Contract amounts may exceed the total grant amount, but the invoices paid by the grant will not exceed the grant amount.

Department Rep. Approver: _____

Title: Grant Manager

Signature: _____

Date: _____

1 Administrative and/or Indirect Cost – generally, the legislation authorizing the issuance of bonds prohibits the use of its proceeds for indirect expenses (e.g. penalty fees or damages other than pay for work performed, attorney fees, and administrative fees). Such use of bond proceeds shall not be allowed unless specifically authorized by statute.

Revised 7/2025

[THIS SPACE LEFT BLANK INTENTIONALLY]

Docusign Envelope ID: B69E7954-A830-4D78-AF50-806A2ADA6A8E

EXHIBIT C

Special Conditions (If Fiscal Agent Required or Anti Donations Issues Exist)

OPTIONAL EXHIBIT C
SPECIAL CONDITIONS

The capital outlay oversight requires grantees' accounting methods and procedures, including their internal control framework, to be scrutinized, so as to safeguard State capital outlay appropriations and assets acquired with such appropriations.

This Capital Outlay Special Grant Condition(s) **Exhibit C** is necessary pursuant to § 6-3b-1 et seq., NMSA 1978 (Public Finance Accountability Act) and MAPS Fin 9.2, due to the Grantees' material weaknesses, significant deficiencies, or findings that raised concerns as to the ability to expend grant funds in accordance with applicable law in the organization's FY[20XX] audit. The Special Conditions identified below apply to the authorized agent, [insert the Grantee or Fiscal Agent name].

Procurement - All purchases or contracts the Grantee enters that shall use funding from the Department capital appropriations grant must be approved by the Department prior to the initiation of implementing purchasing documents. The Grantee shall receive such prior approval via official correspondence from the Department, which may be through letter or email. The Grantee shall submit the following to the Department in pursuit of prior approval: purchasing policies and procedures, CFO certification, documentation of management and program approval, policies and procedures governing purchasing and contracting, a copy of the current procurement and contracting policies, and documentation regarding informing staff responsible for purchasing and contracting on such policies and procedures.

Budget - Provide documentation of approval of your current budget from DFA Local Government or other authoritative agency. Provide policies and procedures on who is responsible for and how annual budgets (expenditures and revenue) are established, monitored and adjusted. Provide a corrective action plan on how budget issues identified in your audit will be/have been addressed. Also include documentation on how staff responsible for budgeting is informed on budget policies and procedures.

Capital Assets - Provide a complete list of inventory including inventory control numbers and current location. Provide policies and procedures on capital assets and inventory and specify how the proposed purchased items will be included, tagged, and tracked in capital asset inventory. Also include documentation on how staff responsible for capital assets is informed on capital asset policies and procedures.

Travel and Per Diem - Provide policies and procedures on travel and per diem. Also include how staff who travel and those responsible for travel reimbursement are informed on travel and per diem policies and procedures.

Timely Audits – Provide policies and procedures on annual audits. Provide documentation on how and who is responsible for insuring that annual audits are completed timely. Also include documentation on how staff responsible for the annual audit is informed on audit policies and procedures.

Cash Management – policies and procedures on cash management of federal funds. Provide procedures used to draw and disburse federal funds. Provide procedures to reconcile draw amounts, deposits and disbursements; and to prepare federal cash reporting documents to ensure compliance with federal regulations.

The <Grantee> was required to, and has provided sufficient documentation regarding [insert specific names of the Special Condition(s)], as referenced in the <Grantee>'s [20XX] Audit file. Therefore, the criteria to enter into this agreement have been met.

[THIS SPACE LEFT BLANK INTENTIONALLY]

Docusign Envelope ID: B69E7954-A830-4D78-AF50-806A2ADA6A8E

EXHIBIT D

Project Budget Worksheet *
*(Provided separately when grant agreement issued to Grantee)

[THIS SPACE LEFT BLANK INTENTIONALLY]

Docusign Envelope ID: B69E7954-A830-4D78-AF50-806A2ADA6A8E

Exhibit E

Data Sharing Provisions for New Mexico Capital Outlay Agreements

I. Introduction:

This Data Sharing Provisions Exhibit ("Exhibit") is incorporated into the New Mexico Capital Outlay Agreements ("Agreements") between the State of New Mexico ("State") and [Insert Partner Name] ("Partner"). This Exhibit outlines the terms and conditions under which data will be shared between the Parties to ensure compliance with New Mexico state laws and regulations, focusing on data privacy, security, and compliance.

II. Definitions:

a. Authorized User: An employee, agent, assign, representative, independent contractor, or other person or entity authorized by Partner or State to access, use, or disclose information through this exhibit.

b. Confidential Information: All data or information shared in confidence, with the expectation that it will not be disclosed in an identifiable form. This includes data that is exempt from public disclosure under the New Mexico Inspection of Public Records Act (§ 14-2-1 et seq. NMSA 1978) or other relevant laws.

c. Data Storage: Electronic media that hold recorded information.

d. Data Transmission: The process of moving information over a network from its source to one or more destinations.

e. Direct Identifier: Records or data containing personal identifiers such as names, addresses, and social security numbers.

f. Disclosure: Permission to access, release, transfer, or otherwise communicate confidential information by any means to any third party, except as authorized by the Party that controls the record.

g. Encryption involves using algorithms to encode data, rendering it unreadable without a specific key. It may be necessary during data transmission and/or storage.

h. Information: Any data, figures, statistics, or other facts provided or learned about someone or something, including Confidential Information, that may be legally transmitted under this Exhibit.

i. Limited Dataset: A data file that omits Direct Identifiers.

j. Protected Personally Identifiable Information: Sensitive personal details such as social security numbers and financial account numbers, with specific exclusions as outlined in the Agreements.

III. Purpose:

The purpose of this exhibit is to promote transparency, facilitate information sharing between the parties, support better policy and decision-making, and enhance public services through collaborative

[THIS SPACE LEFT BLANK INTENTIONALLY]

Docusign Envelope ID: B69E7954-A830-4D78-AF50-806A2ADA6A8E

data analysis from various sources.

IV. Use of Information:

a. Use of Information obtained or created under this exhibit shall be strictly limited to the purposes stated herein and in the agreements. The parties agree not to sell Information to third parties or use it for commercial, solicitation, or political purposes.

b. Each Party shall serve as the custodian of the Information and comply with all conditions for its use, including security measures to prevent unauthorized access.

c. The Parties shall follow all relevant federal and state laws and regulations governing the use of such Information.

V. Safeguarding Information:

a. Confidentiality: Access to Confidential Information shall be limited to the minimum necessary to accomplish the purposes of this Exhibit. Authorized Users must adhere to the confidentiality requirements.

b. Security: Security practices shall comply with the requirements of the New Mexico Department of Information Technology Act and related regulations. The Parties agree to notify each other within three business days of any suspected or actual security breach.

c. Information Storage and Transmission: Data Storage and Transmission shall take place on an encrypted server with appropriate security controls.

VI. Re-Disclosure of Information:

The Parties agree not to disclose Information except as required by law or with prior written approval of the other Party. If there is a public records request, the Party receiving it shall notify the other Party within three business days.

VII. Ownership of Information:

Legal title to Information shall remain with the provider. The Partner grants the State a royalty-free, non-exclusive, non-transferable license to use the Information in furtherance of the purposes outlined in this Exhibit.

Docusign Envelope ID: B69E7954-A830-4D78-AF50-806A2ADA6A8E

Signature: STEN JOHNSON

Email: sajohnson@santafenm.gov

Signature: BRIAN MOYA

Email: bjmoya@santafenm.gov

Memo_MUNIS_BAR_Form_-_20192_NM DFA Grant $525K FY26

Interim Agreement Report 2025-10-07

Created:	2025-10-01
By:	TONIETTE CANDELARIA MARTINEZ (tocandelariamartinez@santafenm.gov)
Status:	Out for Signature
Transaction ID:	CBJCHBCAABAA63zpaKpQ1c9y2xgpO_mk9ORHhYE765jN

Agreement History

Agreement history is the list of the events that have impacted the status of the agreement prior to the final signature. A final audit report will be generated when the agreement is complete.

"Memo_MUNIS_BAR_Form_-_20192_NM DFA Grant $525K FY 26" History

Document created by TONIETTE CANDELARIA MARTINEZ (tocandelariamartinez@santafenm.gov)
2025-10-01 - 10:34:03 PM GMT- IP address: 63.232.20.2

Document emailed to STEN JOHNSON (sajohnson@santafenm.gov) for signature
2025-10-01 - 10:39:46 PM GMT

Email viewed by STEN JOHNSON (sajohnson@santafenm.gov)
2025-10-02 - 2:18:55 PM GMT- IP address: 166.137.163.56

Document e-signed by STEN JOHNSON (sajohnson@santafenm.gov)
Signature Date: 2025-10-02 - 2:20:02 PM GMT - Time Source: server- IP address: 166.137.163.56

Document emailed to BRIAN MOYA (bjmoya@santafenm.gov) for signature
2025-10-02 - 2:20:04 PM GMT

Email viewed by BRIAN MOYA (bjmoya@santafenm.gov)
2025-10-04 - 2:34:16 PM GMT- IP address: 129.222.129.8

Document e-signed by BRIAN MOYA (bjmoya@santafenm.gov)
Signature Date: 2025-10-04 - 2:34:41 PM GMT - Time Source: server- IP address: 129.222.129.8

Document emailed to ajhopkins@santafenm.gov ajhopkins@santafenm.gov (ajhopkins@santafenm.gov) for signature
2025-10-04 - 2:34:43 PM GMT

Email viewed by ajhopkins@santafenm.gov ajhopkins@santafenm.gov (ajhopkins@santafenm.gov)
2025-10-06 - 6:45:05 PM GMT- IP address: 104.47.65.254

Document e-signed by ajhopkins@santafenm.gov ajhopkins@santafenm.gov (ajhopkins@santafenm.gov)
Signature Date: 2025-10-06 - 6:45:50 PM GMT - Time Source: server- IP address: 63.232.20.2

Document emailed to EMILY OSTER (ekoster@santafenm.gov) for signature
2025-10-06 - 6:45:52 PM GMT

Document e-signed by EMILY OSTER (ekoster@santafenm.gov)
Signature Date: 2025-10-07 - 7:00:57 PM GMT - Time Source: server- IP address: 63.232.20.2

Document emailed to Mark Scott (mscott@santafenm.gov) for signature
2025-10-07 - 7:00:59 PM GMT

Docusign Envelope ID: B69E7954-A830-4D78-AF50-806A2ADA6A8E

Signature: 

Email: xivigil@santafenm.gov

25-0500 New Mexico Department of Finance and Administration

Final Audit Report 2025-11-03

Created:	2025-10-31
By:	XAVIER VIGIL (xivigil@santafenm.gov)
Status:	Signed
Transaction ID:	CBJCHBCAABAAR_4NWE2dGwho_Vc29fl8Zf4NGVE77DM9

"25-0500 New Mexico Department of Finance and Administratio n" History

Document created by XAVIER VIGIL (xivigil@santafenm.gov)
2025-10-31 - 9:54:41 PM GMT- IP address: 63.232.20.2

Document emailed to XAVIER VIGIL (xivigil@santafenm.gov) for signature
2025-10-31 - 9:57:27 PM GMT

Document e-signed by XAVIER VIGIL (xivigil@santafenm.gov)
Signature Date: 2025-10-31 - 9:57:41 PM GMT - Time Source: server- IP address: 63.232.20.2

Document emailed to Alan Webber (amwebber@santafenm.gov) for signature
2025-10-31 - 9:57:43 PM GMT

Email viewed by Alan Webber (amwebber@santafenm.gov)
2025-11-01 - 2:16:10 AM GMT- IP address: 172.225.199.9

Document e-signed by Alan Webber (amwebber@santafenm.gov)
Signature Date: 2025-11-01 - 5:26:56 PM GMT - Time Source: server- IP address: 73.242.252.236

Document emailed to ANDREA SALAZAR (asalazar@santafenm.gov) for signature
2025-11-01 - 5:26:58 PM GMT

Email viewed by ANDREA SALAZAR (asalazar@santafenm.gov)
2025-11-03 - 2:25:17 AM GMT- IP address: 76.26.101.206

Document e-signed by ANDREA SALAZAR (asalazar@santafenm.gov)
Signature Date: 2025-11-03 - 2:25:30 AM GMT - Time Source: server- IP address: 76.26.101.206

Agreement completed.
2025-11-03 - 2:25:30 AM GMT

Powered by Adobe Acrobat Sign

BUSINESS REGISTRATION

VILLAGE OF LOS RANCHOS DE ALBUQUERQUE
6718 Rio Grande Blvd. NW • Los Ranchos, NM 87107 • (505) 344-6582

411 EQUIPMENT, LLC
7324 4th Street NW
Los Ranchos, NM 87107

PERMIT NO: 1843
BUSINESS TYPE: Commercial
EXPIRES: December 31, 2024

The issuance of this business license has been done so in accordance with Village Code §3.1.1-7 and approved by the planning and zoning department. Issuance of this license shall in no way relieve the Licensee of compliance with any and/or all applicable Village Codified Ordinances. This license is valid for the 2024 calendar year.

Danielle Sedillo-Molina — 06/06/2024

Village Clerk — Date

-DISPLAY IN A CONSPICUOUS PLACE-
NOT TRANSFERABLE

losranchosnm.gov

VLR.BL.2024

ACORD

CERTIFICATE OF LIABILITY INSURANCE

DATE (MM/DD/YYYY) 8/6/2025

THIS CERTIFICATE IS ISSUED AS A MATTER OF INFORMATION ONLY AND CONFERS NO RIGHTS UPON THE CERTIFICATE HOLDER. THIS CERTIFICATE DOES NOT AFFIRMATIVELY OR NEGATIVELY AMEND, EXTEND OR ALTER THE COVERAGE AFFORDED BY THE POLICIES BELOW. THIS CERTIFICATE OF INSURANCE DOES NOT CONSTITUTE A CONTRACT BETWEEN THE ISSUING INSURER(S), AUTHORIZED REPRESENTATIVE OR PRODUCER, AND THE CERTIFICATE HOLDER.

IMPORTANT: If the certificate holder is an ADDITIONAL INSURED, the policy(ies) must have ADDITIONAL INSURED provisions or be endorsed. If SUBROGATION IS WAIVED, subject to the terms and conditions of the policy, certain policies may require an endorsement. A statement on this certificate does not confer rights to the certificate holder in lieu of such endorsement(s).

PRODUCER	CONTACT NAME:	
Charles L. Crane Agency Co. 400 Chesterfield Center Suite 100 Chesterfield, MO 63017	PHONE (A/C, No, Ext): (636) 537-5000	FAX (A/C, No): (636) 537-5009
	E-MAIL ADDRESS:	

INSURER(S) AFFORDING COVERAGE	NAIC #
INSURER A : Travelers Indemnity Co of CT	25682
INSURER B : Travelers Indemnity Co.	25658
INSURER C : Travelers Prop Cas Co of Amer	25674
INSURER D : Travelers Indemnity of America	25666
INSURER E : Transguard Ins Co of America	28886
INSURER F :	

INSURED

411 Equipment LLC
7324 4th St NW
Los Ranchos, NM 87107

COVERAGES **CERTIFICATE NUMBER:** **REVISION NUMBER:**

THIS IS TO CERTIFY THAT THE POLICIES OF INSURANCE LISTED BELOW HAVE BEEN ISSUED TO THE INSURED NAMED ABOVE FOR THE POLICY PERIOD INDICATED. NOTWITHSTANDING ANY REQUIREMENT, TERM OR CONDITION OF ANY CONTRACT OR OTHER DOCUMENT WITH RESPECT TO WHICH THIS CERTIFICATE MAY BE ISSUED OR MAY PERTAIN, THE INSURANCE AFFORDED BY THE POLICIES DESCRIBED HEREIN IS SUBJECT TO ALL THE TERMS, EXCLUSIONS AND CONDITIONS OF SUCH POLICIES. LIMITS SHOWN MAY HAVE BEEN REDUCED BY PAID CLAIMS.

INSR LTR	TYPE OF INSURANCE	ADDL INSD	SUBR WVD	POLICY NUMBER	POLICY EFF (MM/DD/YYYY)	POLICY EXP (MM/DD/YYYY)	LIMITS	
A	X COMMERCIAL GENERAL LIABILITY CLAIMS-MADE X OCCUR GEN'L AGGREGATE LIMIT APPLIES PER: POLICY PRO-JECT LOC OTHER:			Y6607T196352TCT24	8/9/2025	8/9/2026	EACH OCCURRENCE DAMAGE TO RENTED PREMISES (Ea occurrence) MED EXP (Any one person) PERSONAL & ADV INJURY GENERAL AGGREGATE PRODUCTS - COMP/OP AGG	$ 1,000,000 $ 100,000 $ 5,000 $ 1,000,000 $ 2,000,000 $ 2,000,000
B	AUTOMOBILE LIABILITY X ANY AUTO OWNED AUTOS ONLY SCHEDULED AUTOS X HIRED AUTOS ONLY NON-OWNED AUTOS ONLY			AD5R4505152414	8/9/2025	8/9/2026	COMBINED SINGLE LIMIT (Ea accident) BODILY INJURY (Per person) BODILY INJURY (Per accident) PROPERTY DAMAGE (Per accident) Physical Damage	$ 1,000,000 $ $ $ $
C	X UMBRELLA LIAB X OCCUR EXCESS LIAB CLAIMS-MADE DED X RETENTION $ 10,000			CUP0P4186602414	8/9/2025	8/9/2026	EACH OCCURRENCE AGGREGATE	$ 1,000,000 $ 1,000,000 $
D	WORKERS COMPENSATION AND EMPLOYERS' LIABILITY ANY PROPRIETOR/PARTNER/EXECUTIVE OFFICER/MEMBER EXCLUDED? Y / N (Mandatory in NH) If yes, describe under DESCRIPTION OF OPERATIONS below	N / A		UB0P4100842414G	8/9/2025	8/9/2026	X PER STATUTE OTH-ER E.L. EACH ACCIDENT E.L. DISEASE - EA EMPLOYEE E.L. DISEASE - POLICY LIMIT	 $ 500,000 $ 500,000 $ 500,000
B	Garage Liability			AD5R4505152414	8/9/2025	8/9/2026	$1,000,000 EaAcc/Agg	3,000,000
E	Dealer Equipment in			IMP4002872	8/9/2025	8/9/2026	Lieu Garage Keepers	2,500,000

DESCRIPTION OF OPERATIONS / LOCATIONS / VEHICLES (ACORD 101, Additional Remarks Schedule, may be attached if more space is required)

CERTIFICATE HOLDER

City of Santa Fe
PO Box 909
Santa Fe, NM 87504-0909

CANCELLATION

SHOULD ANY OF THE ABOVE DESCRIBED POLICIES BE CANCELLED BEFORE THE EXPIRATION DATE THEREOF, NOTICE WILL BE DELIVERED IN ACCORDANCE WITH THE POLICY PROVISIONS.

AUTHORIZED REPRESENTATIVE



© 1988-2015 ACORD CORPORATION. All rights reserved.
The ACORD name and logo are registered marks of ACORD

Form **W-9**
(Rev. March 2024)
Department of the Treasury
Internal Revenue Service

Request for Taxpayer Identification Number and Certification

Go to *www.irs.gov/FormW9* for instructions and the latest information.

Give form to the requester. Do not send to the IRS.

Before you begin. For guidance related to the purpose of Form W-9, see *Purpose of Form*, below.

Print or type. See *Specific Instructions* on page 3.

1 Name of entity/individual. An entry is required. (For a sole proprietor or disregarded entity, enter the owner's name on line 1, and enter the business/disregarded entity's name on line 2.)

411 Equipment LLC

2 Business name/disregarded entity name, if different from above.

3a Check the appropriate box for federal tax classification of the entity/individual whose name is entered on line 1. Check only **one** of the following seven boxes.

☐ Individual/sole proprietor ☐ C corporation ☐ S corporation ☐ Partnership ☐ Trust/estate

☑ LLC. Enter the tax classification (C = C corporation, S = S corporation, P = Partnership) . . . . S

Note: Check the "LLC" box above and, in the entry space, enter the appropriate code (C, S, or P) for the tax classification of the LLC, unless it is a disregarded entity. A disregarded entity should instead check the appropriate box for the tax classification of its owner.

☐ Other (see instructions)

3b If on line 3a you checked "Partnership" or "Trust/estate," or checked "LLC" and entered "P" as its tax classification, and you are providing this form to a partnership, trust, or estate in which you have an ownership interest, check this box if you have any foreign partners, owners, or beneficiaries. See instructions . . . . . ☐

4 Exemptions (codes apply only to certain entities, not individuals; see instructions on page 3):

Exempt payee code (if any)

Exemption from Foreign Account Tax Compliance Act (FATCA) reporting code (if any)

(Applies to accounts maintained outside the United States.)

5 Address (number, street, and apt. or suite no.). See instructions.

7324 4th St NW

Requester's name and address (optional)

6 City, state, and ZIP code

Los Ranchos, NM 87107-6626

7 List account number(s) here (optional)

Part I Taxpayer Identification Number (TIN)

Enter your TIN in the appropriate box. The TIN provided must match the name given on line 1 to avoid backup withholding. For individuals, this is generally your social security number (SSN). However, for a resident alien, sole proprietor, or disregarded entity, see the instructions for Part I, later. For other entities, it is your employer identification number (EIN). If you do not have a number, see *How to get a TIN*, later.

Note: If the account is in more than one name, see the instructions for line 1. See also *What Name and Number To Give the Requester* for guidelines on whose number to enter.

Social security number

☐☐☐ – ☐☐ – ☐☐☐☐

or

Employer identification number

8 4 – 2 0 7 8 0 9 8

Part II Certification

Under penalties of perjury, I certify that:

1. The number shown on this form is my correct taxpayer identification number (or I am waiting for a number to be issued to me); and
2. I am not subject to backup withholding because (a) I am exempt from backup withholding, or (b) I have not been notified by the Internal Revenue Service (IRS) that I am subject to backup withholding as a result of a failure to report all interest or dividends, or (c) the IRS has notified me that I am no longer subject to backup withholding; and
3. I am a U.S. citizen or other U.S. person (defined below); and
4. The FATCA code(s) entered on this form (if any) indicating that I am exempt from FATCA reporting is correct.

Certification instructions. You must cross out item 2 above if you have been notified by the IRS that you are currently subject to backup withholding because you have failed to report all interest and dividends on your tax return. For real estate transactions, item 2 does not apply. For mortgage interest paid, acquisition or abandonment of secured property, cancellation of debt, contributions to an individual retirement arrangement (IRA), and, generally, payments other than interest and dividends, you are not required to sign the certification, but you must provide your correct TIN. See the instructions for Part II, later.

Sign Here Signature of U.S. person Shan Herrera Date 10-02-25

General Instructions

Section references are to the Internal Revenue Code unless otherwise noted.

Future developments. For the latest information about developments related to Form W-9 and its instructions, such as legislation enacted after they were published, go to *www.irs.gov/FormW9*.

What's New

Line 3a has been modified to clarify how a disregarded entity completes this line. An LLC that is a disregarded entity should check the appropriate box for the tax classification of its owner. Otherwise, it should check the "LLC" box and enter its appropriate tax classification.

New line 3b has been added to this form. A flow-through entity is required to complete this line to indicate that it has direct or indirect foreign partners, owners, or beneficiaries when it provides the Form W-9 to another flow-through entity in which it has an ownership interest. This change is intended to provide a flow-through entity with information regarding the status of its indirect foreign partners, owners, or beneficiaries, so that it can satisfy any applicable reporting requirements. For example, a partnership that has any indirect foreign partners may be required to complete Schedules K-2 and K-3. See the Partnership Instructions for Schedules K-2 and K-3 (Form 1065).

Purpose of Form

An individual or entity (Form W-9 requester) who is required to file an information return with the IRS is giving you this form because they

Signature: Daniel Garcia (Dec 23, 2025 18:14:39 MST)

Email: dagarcia@santafenm.gov

Signature: SCOTT OUDERKIRK (Dec 23, 2025 18:55:52 MST)

Email: slouderkirk@santafenm.gov

CITY OF SANTA FE

The Purchasing Memo

Date: January 5, 2026

To: Governing Body, Finance Committee, and Public Works & Utilities Committee

From: Mario Risso, Assistant Chief MR

Via: Scott Ouderkirk, Interim Fire Chief SCOTT OUDERKIRK

Subject: Inter-Governmental Transfer of Funds to Health Care Authority CY26

Vendor Name: Health Care Authority

Munis Vendor Number: 11103

ITEM AND ISSUE:

Fire Department requests approval to enter a Memorandum of Agreement with the NM Health Care Authority to facilitate an Inter-Governmental Transfer (IGT) of funds. This for the purpose of participation in the NM Ambulance Supplemental Payment Program.

Fire Department requests approval for a payment in total amount of 1,122,045.55 as an Inter-Governmental Transfer (IGT) for a one-year term, Calendar Year 2026. The IGTs will be invoiced and paid quarterly as detailed in MOA 26-630-80000-0004 to New Mexico Health Care Authority (HCA).

CONTRACT NUMBER:

The FY26 contract number is TBD.

BACKGROUND AND SUMMARY:

The Fire Department has been an early adopter of a program now approved for government operated ambulance services to participate in a supplemental payment program from Medicaid. The City pays the IGT of $1,122,045.55 to HCA. HCA applies the funds as a grant share to draw down supplemental payment from Medicaid.

PRIOR APPROVALS AND SUPPORTING INFORMATION:

FUNDING SOURCE:

Fund Name/Number: General Fund/Fund 100

Munis Org Name/Number: Fire Emergency Services Admin/1000021

Munis Object Name/Number: Miscellaneous Expenses/564000

Budget Officer / Designee: Andy Hopkins **Date:** 01/12/2026

Budget Officer Comment/Exceptions: _____

PROCUREMENT METHOD:

The procurement method used was NMSA 1978, Section 13-1-98, Exempt

This is a transaction with a governmental agency, Health Care Authority.

Chief Procurement Officer (CPO)/Designee: JoAnn Lovato Montaño **Date:** 01/13/2026

CPO Comment/Exceptions: CPO exemption on file

ASSOCIATED APPROVALS:

IT Components included? ☐ Yes | ☒ No

Approval: NA **Title:** _____ **Date:** _____

Comment/Exceptions: _____

Treasury/Point of Sale Components included? ☐ Yes | ☒ No

Approval: NA **Title:** _____ **Date:** _____

Comment/Exceptions: _____

Vehicles included? ☐ Yes | ☒ No

Approval: NA **Title:** _____ **Date:** _____

Comment/Exceptions: _____

Construction to City Facilities, Furniture, and/or Fixtures included? ☐ Yes | ☒ No

Approval: NA **Title:** _____ **Date:** _____

Comment/Exceptions: _____

Is this an externally funded purchase? ☐ Yes | ☒ No

If yes, what is the issuing agency: _____

Approval: _____ **Title:** _____ **Date:** _____

Comment/Exceptions: _____

Is this a Capital Asset or Project? ☐ Yes | ☒ No

Project Ledger Number: _____

Approval: _____ **Title:** _____ **Date:** _____

Comment/Exceptions: _____

ATTACHMENTS:

Horizons declination

MOA 26-630-8000-0004
Procurement document: Exemption Determination/Email
BAR

Outlook

Re: Determination request

From DUTTON-LEYDA, TRAVIS K. <tkduttonleyda@santafenm.gov>
Date Wed 12/31/2025 1:14 PM
To CANDELARIA MARTINEZ, TONIETTE O. <tocandelariamartinez@santafenm.gov>
Cc Fire Administration <fireadmin@santafenm.gov>

Hi Toni, this is exempt pursuant to NMSA 1978, Section 13-1-98 (A).

Thank you.

Regards,

Travis Dutton-Leyda
Chief Procurement Officer
City of Santa Fe
200 Lincoln Avenue
Santa Fe, NM 87501
505-629-8351
tkduttonleyda@santafenm.gov

Image Book time to meet with me

https://santafenm.gov/finance-2/purchasing-1

Vendor Registration Sites and Current Procurement Opportunities:

[Current for Finances Only] https://santafenm.munisselfservice.com/vss/

[OpenGov is Live] https://procurement.opengov.com/portal/santafenm

[Current] https://www.withpavilion.com/

Internal Link: https://intranet.santafenm.gov/central_purchasing_division_cpd
Chart, text
"A journey of a thousand miles begins with a single step" ~ Lao Tzu

---

From: CANDELARIA MARTINEZ, TONIETTE O. <tocandelariamartinez@santafenm.gov>
Sent: Wednesday, December 31, 2025 1:11:06 PM
To: DUTTON-LEYDA, TRAVIS K. <tkduttonleyda@santafenm.gov>
Cc: Fire Administration <fireadmin@santafenm.gov>
Subject: Re: Determination request

Hi Travis,

Following up on this determination request. Today I received the *approved to form* Grant Agreement back from the City Attorney's office. I'm putting the packet together and need this determination to include in the packet. It's imperative that this Fire Department item be added to the agendas for January 2026 Committee Review. The vendor needed all signed MOAs by 12/31/2026 (we were permitted an extension...). Collection of all signed MOAs allows for timely IGT invoicing before supplemental payments are disbursed. Please expedite this request in order for me to submit for internal City signature routing before the committee review deadline. Appreciate you ---toniette

---

From: CANDELARIA MARTINEZ, TONIETTE O. <tocandelariamartinez@santafenm.gov>
Sent: Wednesday, December 24, 2025 11:32 AM
To: DUTTON-LEYDA, TRAVIS K. <tkduttonleyda@santafenm.gov>
Cc: Fire Administration <fireadmin@santafenm.gov>
Subject: Determination request

Good morning Sir,
I'm requesting a determination for *Round 4* term (covers period Jan-Jun 2026) to a Memorandum of Agreement (MOA) that establishes an Intergovernmental Transfer (IGT) to NM Healthcare Authority. The MOA will allow Fire Department to participate in the NM Ambulance Supplemental Payment Program to recover costs of emergency response from Medicaid. Let me know if you need anything else.

Respectfully,

Toniette Candelaria Martinez
Fiscal Administrator
505-955-3109
200 Murales Road
Santa Fe, NM 87501
www.santafenm.gov/fire-department

Services Offered to the City of Santa Fe (FY26)

Approved:
These services have been approved by the New Mexico Council for Purchasing from Persons with Disabilities and are available through Horizons of New Mexico.

- ADA Accessibility Consulting Services
- Auctioneering Services
- Bulk Mailing and Sorting
- Call Center Services
- Computer Refurbishing
- Courier Services
- Decontamination, Sanitation and Sterilization Services
- Debris Removal
- Document Imaging
- Document Shredding
- Envelope Stuffing
- General Labor
- Hard Drive Destruction
- Janitorial and Housekeeping Services – Including Carpet Cleaning & Floor Care
- Landscape Irrigation
- Landscaping
- Mailing Services
- Management of an Assistive Technology Reuse and Recycling Program
- Medical Waste Disposal
- Meeting Minute Preparation Services
- Pest Control and Extermination Services
- Printing Services
- Rest Area Maintenance
- Screen Printing
- Snow Removal
- Temporary Staffing Services
- Yard, Grounds, and Lawn Maintenance

Permissive:
The services have been approved by the New Mexico Council for Purchasing from Persons with Disabilities as permissible for sale under the State Use Act through Horizons of New Mexico. While the Council recognizes that certain Horizons of New Mexico members are capable of performing the services listed below, said services are considered permissive and excluded from the mandatory aspect of the State Use Program. Any procurement of the below services through Horizons of New Mexico is at the discretion of the purchasing agent and will be considered by the Council on a case-by-case basis.

- Graphic Design
- Graphic Design - Logo Design
- IT – Enterprise Application
- IT – IV & V
- IT Network and Database Management
- IT Support
- IT Security Services
- IT – Web Design
- IT – Web Programmer
- Marketing
- Social Media Marketing

For the complete State Use service list, please go to: http://horizonsofnewmexico.org/services.html

Log # *{Finance use only}*:	
Journal # *{Finance use only}*:	

City of Santa Fe, New Mexico
BUDGET AMENDMENT RESOLUTION (BAR)

DEPARTMENT / DIVISION NAME	DATE
	12/31/2025

ITEM DESCRIPTION	ORG	OBJECT	PROJECT	INCREASE	DECREASE
EXPENDITURES				*{enter as positive #}*	*{enter as negative #}*
Miscellaneous Expenses	1000021	564000		1,122,046	
REVENUES				*{enter as negative #}*	*{enter as positive #}*
				$ 1,122,046	$ -

JUSTIFICATION: *(use additional page if needed)*
--Attach supporting documentation/memo

Appropriate funding from existing General Fund cash balances to pay for Ambulance Supplemental Payment Program

Intergovernmental Transfers for CY26 per the terms MOA 26-630-80000-0004.

{Complete section below if BAR results in a net change to ANY Fund}

Fund(s) Affected	Fund Balance Increase/(Decrease)
100	1,122,046
TOTAL:	**1,122,046**

TONIETTE CANDELARIA MARTINEZ
Toniette Candelaria Martinez 12/31/2025
Prepared By *{print name}* Date

Mario Risso (Jan 5, 2026 19:35:32 MST)
Mario Risso, Assistant Fire Chief
Division Director Signature *{optional}* Date

Scott Ouderkirk, Interim Fire Chief
Department Director Signature Date

{Use this form for Finance Committee/ City Council agenda items ONLY}

CITY COUNCIL APPROVAL

City Council Approval Date

Agenda Item #:

Andy Hopkins 01/12/2026
Budget Officer Date

Finance Director *{≤ $5,000}* Date

City Manager *{≤ $60,000}* Date

MEMORANDUM OF AGREEMENT

THIS MEMORANDUM OF AGREEMENT (MOA) constitutes an agreement between the **New Mexico Health Care Authority (HCA),** and **City of Santa Fe Fire Department** collectively referred to as the "Parties," regarding the implementation of Ambulance Supplemental Payment Program (ASPP). The ASPP is approved and administered in accordance with Centers for Medicaid Services (CMS) managed care regulations, 42 C.F.R. § 438 regarding State-Directed Payments. See SDP Identifier NM_Fee_Oth_Renewal_20260101-20261231.

I. DEFINITIONS

A. Intergovernmental Transfers or IGTs means transfers of funds from a non-Medicaid governmental entity (e.g., counties, hospital taxing districts, providers operated by state or local government) to the Medicaid agency. IGTs must be compliant with 42 CFR Part 433, Subpart B. In this MOA, the "IGT Provider" is the City of Santa Fe. The IGT Provider must comply with applicable provisions of 42 CFR Part 433, Subpart B.

B. Medicaid means the medical assistance program authorized by Title XIX of the Social Security Act, 42 U.S.C. §§ 1396 et seq., and regulations, as administered in New Mexico by the Agency. In this MOA the "Agency" is HCA.

C. CMS means Centers for Medicaid Services.

D. EGAS means Emergency Ground Ambulance Services.

E. MCO means Managed Care Organization, New Mexico Medicaid Managed Care or Turquoise Care.

F. MMIS means Medicaid Management Information System.

II. GENERAL PROVISIONS

A. The IGT Provider and the Agency agree that the IGT Provider will remit IGT funds to the Agency in an amount not to exceed $1,122,045.55. The IGT Provider and the Agency have agreed that these IGT funds will only be used for the ASPP. Schedule of IGT provider transfers for CY26:

Amount of Transfer	Period Involved	Date of Transfer
$280,511.38	Jan 1 – Mar 31, 2026	April 30, 2026
$280,511.39	Apr 1 – June 30,2026	July 30, 2026
$280,511.39	Jul 1 – Sept 30, 2026	October 31, 2026
$280,511.39	Oct 1 – Dec 31, 2026	January 31, 2027

B. The IGT Provider will sign and return this MOA to the Agency.

C. The IGT Provider will pay IGT funds to the Agency in an amount not to exceed $1,122,045.55. The IGT Provider will transfer payments to the Agency in the following manner:
   i. The Agency will bill the IGT Provider when payment is due.
   ii. The IGT Provider and the Agency agree that the Agency will maintain necessary records and supporting documentation applicable to health services covered by this MOA in accordance with public records laws and established retention schedules.

D. ASPP EGAS providers will be paid a supplemental payment on a quarterly basis tied to MMIS claims data utilization. Supplemental payments will be based on the calculated average cost per transport, derived from the required annual cost reports submitted by ASPP EGAS providers for the prior year.

E. ASPP EGAS providers will fund the state share in the form of IGTs. Each provider will have a fully executed Memorandum of Agreement consenting to the terms of the IGTs.

F. Upon CMS approval, supplemental payments will be distributed retroactively to January 1, 2026, effective date, then on a quarterly cadence.

III. AUDITS AND RECORDS

A. IGT Provider agrees to maintain books, records, and documents (including electronic storage media) pertinent to performance under this MOA in accordance with generally accepted accounting procedures and practices, which sufficiently and properly reflect all revenues and expenditures of funds provided.

B. IGT Provider agrees to assure that these records shall be subject at all reasonable times to inspection, review, or audit by state personnel and other personnel duly authorized by the Agency, as well as by federal personnel, if applicable.

C. IGT Provider agrees to comply with applicable public record inspection and retention laws for public records related to this MOA.

IV. RETENTION OF RECORDS

A. The IGT Provider agrees to retain all financial records, supporting documents, statistical records, and any other documents (including electronic storage media) pertinent to performance under this MOA for a period of six years after termination of this MOA, or if an audit has been initiated and audit findings have not been resolved at the end of six years, the records shall be retained until resolution of the audit findings.

B. Persons duly authorized by the Agency and federal auditors will have full access to and the right to examine any records and documents arising from this MOA. The rights of access in this section will not be limited to the required retention period but will last as long as the records are retained. IGT Provider agrees to permit persons duly authorized by the Agency to inspect any records, papers, and documents of the IGT Provider which are relevant to this MOA.

V. ASSIGNMENT AND SUBCONTRACTS

The IGT Provider agrees to neither assign the responsibility of this MOA to another party nor subcontract for any of the work contemplated under this MOA without prior written approval of the Agency. No approval by the Agency of any assignment or subcontract will be deemed in any event or in any manner to provide for the incurrence of any obligation of the Agency in addition to the total dollar amount agreed upon in this MOA. All assignments or subcontracts shall be subject to the conditions of this MOA and to any conditions of approval that the Agency shall deem necessary.

VI. AMENDMENT

This MOA may only be amended upon a written instrument signed by the parties.

VII. ASSURANCES

A. IGT Provider confirms that there are no pre-arranged agreements (contractual or otherwise) between the respective counties, taxing districts, and/or the providers to re-direct any portion of these aforementioned supplemental payments in order to satisfy non-Medicaid, non- uninsured, and non-underinsured activities.

B. IGT Provider agrees the following provision will be included in any agreements between the IGT Provider and local providers where IGT funding is provided pursuant to this MOA:

> *Funding provided in this agreement will be prioritized so that designated IGT funding must first be used to fund the Medicaid program and used secondarily for other purposes.*

VIII. TERM

A. The duties under this MOA will be performed from January 1, 2026, through December 31, 2026, and this MOA terminates June 30, 2027, which includes the states certified forward period.

B. This MOA may be executed in multiple counterparts, each of which will constitute an original, and each of which will be fully binding on the party signing at least one counterpart.

Local Intergovernmental Transfers	
Program / Amount	
Estimated IGTs	$1,122,045.55
Total Funding Not to Exceed	$1,122,045.55

IN WITNESS THEREOF, the parties execute this Memorandum of Agreement.

HEALTH CARE AUTHORITY

By: _____ Date: _____
Kari Armijo, HCA Cabinet Secretary

By: _____ Date: _____
Carolee Graham, HCA Chief Financial Officer

Approved by General Counsel:

By: _____ Date: _____
Rose Bryan, HCA Chief General Counsel

CITY OF SANTA FE

_____ Date: _____
Michael Garcia, Mayor

Approved by:

_____ Date: Dec 30, 2025
City Attorney's Office

BRIAN MOYA
_____ Date: 01/13/2026
Finance Director

_____ Date: _____
City Clerk

CERTIFICATE OF LIABILITY INSURANCE

DATE (MM/DD/YYYY): 1/6/2026

THIS CERTIFICATE IS ISSUED AS A MATTER OF INFORMATION ONLY AND CONFERS NO RIGHTS UPON THE CERTIFICATE HOLDER. THIS CERTIFICATE DOES NOT AFFIRMATIVELY OR NEGATIVELY AMEND, EXTEND OR ALTER THE COVERAGE AFFORDED BY THE POLICIES BELOW. THIS CERTIFICATE OF INSURANCE DOES NOT CONSTITUTE A CONTRACT BETWEEN THE ISSUING INSURER(S), AUTHORIZED REPRESENTATIVE OR PRODUCER, AND THE CERTIFICATE HOLDER.

IMPORTANT: If the certificate holder is an ADDITIONAL INSURED, the policy(ies) must have ADDITIONAL INSURED provisions or be endorsed. If SUBROGATION IS WAIVED, subject to the terms and conditions of the policy, certain policies may require an endorsement. A statement on this certificate does not confer rights to the certificate holder in lieu of such endorsement(s).

PRODUCER	CONTACT NAME: Charlotte Maestas
Truecoverage LLC. 2400 Louisiana Blvd NE. Bldg 3 Suite 140 Albuquerque NM 87110	PHONE (A/C, No, Ext): (505) 657-4669 FAX (A/C, No): E-MAIL ADDRESS: charlotte.maestas@truecoverage.com

INSURER(S) AFFORDING COVERAGE	NAIC #
INSURER A : ARCH SPECIALTY INS CO	21199
INSURER B : ACCIDENT FUND GEN INS CO	12304
INSURER C :	
INSURER D :	
INSURER E :	
INSURER F :	

INSURED

Enviroworks, LLC
5 Cinnamon
Edgewood NM 87015

COVERAGES **CERTIFICATE NUMBER:** **REVISION NUMBER:**

THIS IS TO CERTIFY THAT THE POLICIES OF INSURANCE LISTED BELOW HAVE BEEN ISSUED TO THE INSURED NAMED ABOVE FOR THE POLICY PERIOD INDICATED. NOTWITHSTANDING ANY REQUIREMENT, TERM OR CONDITION OF ANY CONTRACT OR OTHER DOCUMENT WITH RESPECT TO WHICH THIS CERTIFICATE MAY BE ISSUED OR MAY PERTAIN, THE INSURANCE AFFORDED BY THE POLICIES DESCRIBED HEREIN IS SUBJECT TO ALL THE TERMS, EXCLUSIONS AND CONDITIONS OF SUCH POLICIES. LIMITS SHOWN MAY HAVE BEEN REDUCED BY PAID CLAIMS.

INSR LTR	TYPE OF INSURANCE	ADDL INSD	SUBR WVD	POLICY NUMBER	POLICY EFF (MM/DD/YYYY)	POLICY EXP (MM/DD/YYYY)	LIMITS	
A	[X] COMMERCIAL GENERAL LIABILITY [ ] CLAIMS-MADE [X] OCCUR [X] [ ] GEN'L AGGREGATE LIMIT APPLIES PER: [X] POLICY [ ] PRO-JECT [ ] LOC [ ] OTHER:	Y	Y	12EMP7194713	01/01/2026	01/01/2027	EACH OCCURRENCE DAMAGE TO RENTED PREMISES (Ea occurrence) MED EXP (Any one person) PERSONAL & ADV INJURY GENERAL AGGREGATE PRODUCTS - COMP/OP AGG [ ]	$ 1,000,000 $ 100,000 $ 5,000 $ 1,000,000 $ 2,000,000 $ 2,000,000 $
	AUTOMOBILE LIABILITY [ ] ANY AUTO [ ] OWNED AUTOS ONLY [ ] SCHEDULED AUTOS [ ] HIRED AUTOS ONLY [ ] NON-OWNED AUTOS ONLY [ ] [ ]						COMBINED SINGLE LIMIT (Ea accident) BODILY INJURY (Per person) BODILY INJURY (Per accident) PROPERTY DAMAGE (Per accident) [ ]	$ $ $ $ $
A	[X] UMBRELLA LIAB [X] OCCUR EXCESS LIAB [ ] CLAIMS-MADE [ ] DED [ ] RETENTION $			12EMX7194813	01/01/2026	01/01/2027	EACH OCCURRENCE AGGREGATE [ ]	$ 4,000,000 $ 4,000,000 $
B	WORKERS COMPENSATION AND EMPLOYERS' LIABILITY Y / N ANY PROPRIETOR/PARTNER/EXECUTIVE OFFICER/MEMBER EXCLUDED? [ ] (Mandatory in NH) If yes, describe under DESCRIPTION OF OPERATIONS below	N / A	Y	WCP100102002	01/01/2026	01/01/2027	[ ] PER STATUTE [ ] OTH-ER E.L. EACH ACCIDENT E.L. DISEASE - EA EMPLOYEE E.L. DISEASE - POLICY LIMIT	 $ 1,000,000 $ 1,000,000 $ 1,000,000

DESCRIPTION OF OPERATIONS / LOCATIONS / VEHICLES (ACORD 101, Additional Remarks Schedule, may be attached if more space is required)

See ACORD 101

CERTIFICATE HOLDER

City of Santa Fe
200 Lincoln Ave
PO Box 909
Santa Fe NM 87504

CANCELLATION

SHOULD ANY OF THE ABOVE DESCRIBED POLICIES BE CANCELLED BEFORE THE EXPIRATION DATE THEREOF, NOTICE WILL BE DELIVERED IN ACCORDANCE WITH THE POLICY PROVISIONS.

AUTHORIZED REPRESENTATIVE

Charlotte Maestas

© 1988-2015 ACORD CORPORATION. All rights reserved.

AGENCY CUSTOMER ID: _____

LOC #: _____

ADDITIONAL REMARKS SCHEDULE

AGENCY		NAMED INSURED
Truecoverage LLC.		Enviroworks, LLC
POLICY NUMBER		
WCP100102002, 12EMX7194813, 12EMP7194713		
CARRIER	**NAIC CODE**	
ACCIDENT FUND GEN INS CO	12304, 2119	**EFFECTIVE DATE:**

ADDITIONAL REMARKS

THIS ADDITIONAL REMARKS FORM IS A SCHEDULE TO ACORD FORM,

FORM NUMBER: 25 **FORM TITLE:** Certificate Of Liability Insurance

CERTIFICATE HOLDER SHALL BE NAMED AS ADDITIONAL INSURED City of Santa Fe is additional insured as required by written contract and per policy terms and
conditions. Insured's Policy contains a ?Blanket Additional Insured? provision that establishes the scope of Additional Insured coverage granted to Certificate Holder. Where permitted by state law, the insurer waives its right to subrogate against the certificate holder by reason of payments made under insured's policy, but only under the circumstances stated in the policy.

© 2008 ACORD CORPORATION. All rights reserved.

The ACORD name and logo are registered marks of ACORD

CERTIFICATE OF LIABILITY INSURANCE

DATE (MM/DD/YYYY): 01/05/2026

THIS CERTIFICATE IS ISSUED AS A MATTER OF INFORMATION ONLY AND CONFERS NO RIGHTS UPON THE CERTIFICATE HOLDER. THIS CERTIFICATE DOES NOT AFFIRMATIVELY OR NEGATIVELY AMEND, EXTEND OR ALTER THE COVERAGE AFFORDED BY THE POLICIES BELOW. THIS CERTIFICATE OF INSURANCE DOES NOT CONSTITUTE A CONTRACT BETWEEN THE ISSUING INSURER(S), AUTHORIZED REPRESENTATIVE OR PRODUCER, AND THE CERTIFICATE HOLDER.

IMPORTANT: If the certificate holder is an ADDITIONAL INSURED, the policy(ies) must have ADDITIONAL INSURED provisions or be endorsed. If SUBROGATION IS WAIVED, subject to the terms and conditions of the policy, certain policies may require an endorsement. A statement on this certificate does not confer rights to the certificate holder in lieu of such endorsement(s).

PRODUCER	CONTACT NAME: Melissa Martinez	
AIS, LLC DBA Atlas Insurance Services 2009 Eubank Blvd NE Albuquerque NM 87112	PHONE (A/C, No, Ext): (505) 559-5888	FAX (A/C, No): (505) 323-5652
	E-MAIL ADDRESS: melissam@aisnm.com	
	INSURER(S) AFFORDING COVERAGE	NAIC #
	INSURER A : Selective Ins Co of SC	19259
INSURED Enviroworks, LLC EW Rents LLC PO Box 340 Edgewood NM 87015	INSURER B :	
	INSURER C :	
	INSURER D :	
	INSURER E :	
	INSURER F :	

COVERAGES MM **CERTIFICATE NUMBER:** Cert ID 21203 (270) **REVISION NUMBER:**

THIS IS TO CERTIFY THAT THE POLICIES OF INSURANCE LISTED BELOW HAVE BEEN ISSUED TO THE INSURED NAMED ABOVE FOR THE POLICY PERIOD INDICATED. NOTWITHSTANDING ANY REQUIREMENT, TERM OR CONDITION OF ANY CONTRACT OR OTHER DOCUMENT WITH RESPECT TO WHICH THIS CERTIFICATE MAY BE ISSUED OR MAY PERTAIN, THE INSURANCE AFFORDED BY THE POLICIES DESCRIBED HEREIN IS SUBJECT TO ALL THE TERMS, EXCLUSIONS AND CONDITIONS OF SUCH POLICIES. LIMITS SHOWN MAY HAVE BEEN REDUCED BY PAID CLAIMS.

INSR LTR	TYPE OF INSURANCE	ADDL INSD	SUBR WVD	POLICY NUMBER	POLICY EFF (MM/DD/YYYY)	POLICY EXP (MM/DD/YYYY)	LIMITS	
	COMMERCIAL GENERAL LIABILITY						EACH OCCURRENCE	$
	☐ CLAIMS-MADE ☐ OCCUR						DAMAGE TO RENTED PREMISES (Ea occurrence)	$
							MED EXP (Any one person)	$
							PERSONAL & ADV INJURY	$
	GEN'L AGGREGATE LIMIT APPLIES PER:						GENERAL AGGREGATE	$
	☐ POLICY ☐ PRO-JECT ☐ LOC						PRODUCTS - COMP/OP AGG	$
	OTHER:							$
A	AUTOMOBILE LIABILITY						COMBINED SINGLE LIMIT (Ea accident)	$ 1,000,000
	X ANY AUTO	Y	Y	S 2324181-05	01/01/2026	01/01/2027	BODILY INJURY (Per person)	$
	☐ OWNED AUTOS ONLY ☐ SCHEDULED AUTOS						BODILY INJURY (Per accident)	$
	☐ HIRED AUTOS ONLY ☐ NON-OWNED AUTOS ONLY						PROPERTY DAMAGE (Per accident)	$
								$
	UMBRELLA LIAB ☐ OCCUR						EACH OCCURRENCE	$
	EXCESS LIAB ☐ CLAIMS-MADE						AGGREGATE	$
	☐ DED ☐ RETENTION $							$
	WORKERS COMPENSATION AND EMPLOYERS' LIABILITY Y / N						☐ PER STATUTE ☐ OTH-ER	
	ANYPROPRIETOR/PARTNER/EXECUTIVE OFFICER/MEMBER EXCLUDED? ☐	N / A					E.L. EACH ACCIDENT	$
	(Mandatory in NH)						E.L. DISEASE - EA EMPLOYEE	$
	If yes, describe under DESCRIPTION OF OPERATIONS below						E.L. DISEASE - POLICY LIMIT	$
A	Equipment Floater			S 2324181-05	01/01/2026	01/01/2027	Leased/Rented Equip	$ 500,000
A	Motor Truck Cargo			S2324181-05	01/01/2026	04/01/2027	Per Vehicle	$ 500,000

DESCRIPTION OF OPERATIONS / LOCATIONS / VEHICLES (ACORD 101, Additional Remarks Schedule, may be attached if more space is required)

City of Santa Fe is additional insured as required by written contract and per policy terms and conditions. Insured's Policy contains a "Blanket Additional Insured" provision that establishes the scope of Additional Insured coverage granted to Certificate Holder. Where permitted by state law, the insurer waives its right to subrogate against the certificate holder by reason of payments made under insured's policy, but only under the circumstances stated in the policy.

CERTIFICATE HOLDER

City of Santa Fe

200 Lincoln Ave
PO Box 909
Santa Fe NM 87504

CANCELLATION

SHOULD ANY OF THE ABOVE DESCRIBED POLICIES BE CANCELLED BEFORE THE EXPIRATION DATE THEREOF, NOTICE WILL BE DELIVERED IN ACCORDANCE WITH THE POLICY PROVISIONS.

AUTHORIZED REPRESENTATIVE

© 1988-2015 ACORD CORPORATION. All rights reserved.

CITY OF SANTA FE

Date: December 3, 2025

To: Governing Body

From: Caryn Grosse, PMP, Public Works Project Manager III

Via: Sam Burnett, Interim Public Works Department Director
JOHN BURNETT (Dec 8, 2025 07:52:02 MST)
Tim Farrell, Interim Facilities Division Director Timothy Farrell

Subject: On-Call Price Agreement for City-Wide Miscellaneous Construction Services

Vendor Name: Enviroworks LLC

Vendor Number: 8274

ACTION:
Request for Approval of an On-Call Price Agreement with Enviroworks LLC in the Total Amount of $10,000,000 Including NMGRT for City-Wide Miscellaneous Construction Services for a Term of 10 Years. (Caryn Grosse, Public Works Project Manager III, clgrosse@santafenm.gov)

CONTRACT NUMBER:
The FY26 Munis Contract Number is 3260206.

BACKGROUND AND SUMMARY:
The Public Works Department Facilities Division uses on-call services to augment the skills, licensure, and capacity of staff to address facility issues and emergencies in a timely, safe, and compliant manner. The Facilities Division typically maintains on-call contracts for general contracting, mechanical, electrical, plumbing, roofing, remediation, and landscaping services.

In accordance with the Invitation to Bid (ITB No. 25163) for On-Call City-Wide Miscellaneous Construction Services, multiple responsive vendors were selected for contracts based on lowest bidder and performance criteria: AnchorBuilt Inc., B&D Industries Inc., Davenport Construction Management LLC, Enviroworks LLC, JDR & Associates, LLR Construction LLC, and Unified Contractor, Inc. Enviroworks LLC has provided services throughout the City and has proven to be cost-effective, reliable, and capable of consistently providing high quality results.

On-call contracts are not a guarantee of payment. These contracts are only used, and purchase orders issued, as needs arise and funding is available. The $10,000,000 (including 8.1875% NMGRT) maximum for this contract is based on the historical and anticipated needs across the City over the next ten years.

ATTACHMENTS:
On-Call Price Agreement for Construction Services
Proposal – Exhibit A
Certificate of Insurance
CPO Determination
Horizons Service List

PROCUREMENT METHOD:
The procurement method for this contract is the Invitation to Bid No. 25163, dated April 24, 2025.

Chief Procurement Officer (CPO)/Designee: _____ Date: 01/13/2026
CPO Comment/Exceptions: _____

FUNDING SOURCE:
Funding will be provided on a project-by-project basis.
Fund Name/Number: Various
Munis Org Name/Number: Various
Munis Object Name/Number: Various

Budget Officer/Designee: Andy Hopkins Date: 01/13/2026
Budget Officer Comment/Exceptions: _____

ASSOCIATED APPROVALS:
IT Components included? ☐ Yes | ☒ No
Approval: _____ Title: _____ Date: _____
Comment/Exceptions: _____

Treasury/Point of Sale Components included? ☐ Yes | ☒ No
Approval: _____ Title: _____ Date: _____
Comment/Exceptions: _____

Vehicles included? ☐ Yes | ☒ No
Approval: _____ Title: _____ Date: _____
Comment/Exceptions: _____

Construction to City Facilities, Furniture, and/or Fixtures, included? ☒ Yes | ☐ No
Approval: _____ Title: _____ Date: _____
Comment/Exceptions: Timothy Farrell

Is this an externally funded purchase? ☐ Yes | ☒ No
If yes, what is the issuing agency: _____
Approval: _____ Title: _____ Date: _____
Comment/Exceptions: _____

Capital Asset or Project? ☐ Yes | ☒ No
Project Ledger Number _____
Approval: _____ Title: _____ Date: _____
Comment/Exceptions: _____

Item #: _____
Munis Contract #: 3260206
ITB No.: 25163

CITY OF SANTA FE

ON-CALL PRICE AGREEMENT

CONSTRUCTION CONTRACT

City-Wide Miscellaneous Construction Services

THIS CONTRACT is made and entered into by and between the City of Santa Fe, New Mexico, hereinafter referred to as the "City," and **Enviroworks LLC**, hereinafter referred to as the "Contractor," and is effective as of the date set forth below upon which it is executed by the Parties.

RECITALS

WHEREAS, the City, through its Governing Body, is authorized to enter into an On-Call Price Agreement for the project; and

WHEREAS, the City has procured this Contract according to the established State and Local Purchasing procedures for contracts of the type and amount; and

The City and the Contractor hereby agree as follows:

1. Scope of Work

A. The Contractor shall perform the following work in accordance with their Bid Pricing, attached hereto and made a part thereof, as Exhibit A:

1. This work shall include Miscellaneous General Contracting work for the City of Santa Fe.
2. The Contractor shall be required to provide On-Call Miscellaneous Construction Services for any number of the activities listed under this Scope of Work upon the request of the City. Once a need is identified, the City's Engineers, Project Managers, and Project Administrators (collectively "Project Manager") may issue Task Orders for items described herein. The terms and conditions shall be incorporated in each Task Order issued hereunder. Once a need is identified, the Project Manager will issue a written Task Order to the Contractor detailing the services required. Upon receiving the Task Order, the Contractor shall promptly provide the Project Manager with an estimate, based upon the rates included in their ITB, a cost summary, and a proposed schedule required to complete the assignment or task. Project schedules, negotiated price, and completion dates shall be determined on project-by-project basis and dependent upon the urgency of that task. The Contractor may be required to do some of the work in phases. The City's Project Manager

may issue a Notice to Proceed by signing the Notice after the task price and schedule are finalized by the Contractor, subject to the exception in Article 1(A)(3) below. The Contractor shall be required to provide the requested labor and all equipment and materials within one week of a request issuance of a Notice to Proceed unless otherwise arranged. The Contractor shall agree to provide required labor within 24 hours for emergency situations whenever possible. The Contractor shall not perform any work without a Notice to Proceed signed by the Project Manager, and the City shall not pay for any work performed without a signed Notice to Proceed.

3. If a Task Order does not specify which City division is issuing the Task Order, Contractor shall enquire before acting on a Notice to Proceed. For any City division other than the Public Works Facilities Division the Notice to Proceed is effective only if written approval of the scope of work from the Facilities Division Director is attached.

4. Contractor is responsible for all required permits, licenses, and inspections required to perform this work, and shall comply with applicable municipal, county, state, and federal requirements. Contractor shall be responsible for verification of all existing conditions, measurements, dimensions, adherence to the Contract Documents, Construction Documents, Specifications, and approved directives.

B. Distribution:

City:	Contractor:
Caryn Grosse, PMP Project Manager III City of Santa Fe Facilities Division 2651 Siringo Road, Building E Santa Fe, NM 87505-5229	Matt Kingsley Operations Manager Enviroworks LLC PO Box 340 Edgewood, NM 87015

C. Price Adjustments:

The awarded vendor shall maintain fixed pricing for each year of this contract, defined as twelve (12) months starting on and including the Effective Date. Pricing may be adjusted no more than once annually to commercially reasonable rates through an amendment to the price list attached as Exhibit A signed by Contractor and the City's Director of Public Works. Amendments to Exhibit A do not alter Contractor's maximum total compensation pursuant to Article 2 (Compensation) below. The Contractor must submit all pricing increase requests in writing to the City of Santa Fe designated department contact, providing evidence that the request is based on demonstrable market changes impacting the cost of products and services. The request must itemize all proposed changes by line item and include supporting documentation deemed acceptable by the City of Santa Fe (such as a letter from a manufacturer indicating price increases, etc.). The City's decision on acceptable documentation in this context shall be final and binding upon all parties to the contract. No price increase shall result in a higher profit margin. Pricing changes will apply to orders entered on or after the effective date of the price change. Price increases will not be retroactive to purchase orders already issued. Orders will be filled at the price indicated in the purchase order issued by the City.

To facilitate prompt consideration, all requests for price increases must include the following information:

i. Contract Item Number

ii. Current Item Price
iii. Proposed New Price
iv. Percentage of Increase
v. Mill/Supplier Notification of price increase indicating percentage of increase and including the reason for the increase.

2. ITB Compensation

A. Payment. The City shall compensate the Contractor based on Task Orders and the itemized amounts specified in Exhibit A. For the services described in the scope of work, the City will pay the Contractor up to, but not to exceed, $10,000,000.00. The applicable gross receipts tax (8.1875%) shall be shown as a separate amount on each billing or request for payment made under the contract, consistent with NMSA 1978, Section 13-1-108.

B. The compensation represents a maximum amount. The Contractor must notify the City when the Services provided under this Contract approach 90% of compensation total. Services rendered beyond the maximum compensation amount will not be reimbursed unless the Contract is amended in writing prior to the provision of such services.

C. Invoicing and Payment Terms Payment will be made upon the City's acceptance of deliverables and receipt of a detailed, certified invoice from the Contractor. Payments will be sent to the Contractor's designated address. The City shall issue payment in accordance with the timelines required by law. Invoices must be submitted no later than fifteen (15) days after the Contract's termination. Late invoices will not be processed or paid.

D. Extended Payment Terms for Grant-Funded Contracts. For grant-funded agreements, the City may issue payment within forty-five (45) days following submission of an undisputed payment request.

3. Term

THIS CONTRACT SHALL NOT BECOME EFFECTIVE UNTIL APPROVED BY THE CITY. This Contract shall terminate ten (10) years from date of final signature unless terminated pursuant to Paragraph 4 (Termination) or Paragraph 5 (Appropriations). A contract for construction services may not exceed ten (10) years, including all extensions and renewals, except as otherwise provided by NMSA 1978, Section 13-1-150 through 13-1-152 or SFCC 1987, Section 11-13.

4. Termination

A. Grounds. The City may terminate this Contract for convenience or cause. For contracts within their authority, the City Manager or their designee is authorized to provide the notice of termination, otherwise such notice of termination shall be provided by the Mayor or their designee as authorized by the Governing Body. The Contractor may only terminate this Contract based upon the City's uncured, material breach of this Contract.

i. Except as otherwise provided in Paragraphs 7.A and 17, the City shall give Contractor written notice of termination at least thirty (30) days prior to the

intended date of termination.

ii. Contractor shall give City written notice of termination at least thirty (30) days prior to the intended date of termination, which notice shall (i) identify all the City's material breaches of this Contract upon which the termination is based and (ii) state what the City must do to cure such material breaches. Contractor's notice of termination shall only be effective (i) if the City does not cure all material breaches within the thirty (30) day notice period or (ii) in the case of material breaches that cannot be cured within thirty (30) days, the City does not, within the thirty (30) day notice period, notify the Contractor of its intent to cure and begin with due diligence to cure the material breach.

iii. Notwithstanding the foregoing, this Contract may be terminated immediately upon written notice to the Contractor (i) if the Contractor becomes unable to perform the services contracted for, as determined by the City; (ii) if, during the term of this Contract, the Contractor is suspended or debarred by the City; or (iii) the Contract is terminated pursuant to Paragraph 5, "Appropriations," of this Contract.

B. Liability. Except as otherwise expressly allowed or provided under this Contract, the City's sole liability upon termination shall be to pay for acceptable work performed prior to the Contractor's receipt or issuance of a notice of termination; provided, however, that a notice of termination shall not nullify or otherwise affect either party's liability for pre-termination defaults under or breaches of this Contract. The Contractor shall submit an invoice for such work within thirty (30) days of receiving or sending the notice of termination. *THIS PROVISION IS NOT EXCLUSIVE AND DOES NOT WAIVE THE CITY'S OTHER LEGAL RIGHTS AND REMEDIES CAUSED BY THE CONTRACTOR'S DEFAULT/BREACH OF THIS CONTRACT.*

5. Appropriations

The terms of this Contract are contingent upon sufficient appropriations and authorization being made by the Governing Body for the performance of this Contract. If sufficient appropriations and authorization are not made by the Governing Body, this Contract shall terminate immediately upon written notice being given by the City to the Contractor. The City's decision as to whether sufficient appropriations are available shall be accepted by the Contractor and shall be final. If the City proposes an amendment to the Contract to unilaterally reduce funding, the Contractor shall have the option to terminate the Contract or to agree to the reduced funding, within thirty (30) days of receipt of the proposed amendment.

6. Status of Contractor

The Contractor and its agents and employees are independent contractors performing construction services for the City and are not employees of the City. The Contractor and its agents and employees shall not accrue leave, retirement, insurance, bonding, use of City vehicles, or any other benefits afforded to employees of the City as a result of this Contract. The Contractor acknowledges that all sums received hereunder are reportable by the Contractor for tax purposes, including without limitation, self-employment and business income tax. The Contractor agrees not to purport to bind the City unless the Contractor has express written authority to do so, and then only within the strict limits of that authority.

7. On-Call Price Agreement Performance and Payment Bond

A. When a Task Order is issued in excess of twenty-five thousand dollars ($25,000), the following bonds or security shall be delivered to the City and shall become binding on the parties upon the execution of the contract. If the Contractor fails to deliver the required performance and payment bonds, the Contractor's bid shall be rejected, its bid security shall be enforced to the extent of actual damages. Award of the Task Order via Notice to Proceed shall be made pursuant to the Procurement Code in the following manner:

i. a performance bond satisfactory to the City, executed by a surety company authorized to do business in this state and said surety to be approved in federal circular 570 as published by the United States treasury department or the state board of finance or the local governing authority, in an amount equal to one hundred percent of the price specified in the contract; and

ii. a payment bond satisfactory to the City, executed by a surety company authorized to do business in this state and said surety to be approved in federal circular 570 as published by the United States treasury department or the state board of finance or the local governing authority, in an amount equal to one hundred percent of the price specified in the contract, for the protection of all persons supplying labor and material to the contractor or its subcontractors for the performance of the work provided for in the contract.

B. A subcontractor shall provide a performance and payment bond on a public works building project if the subcontractor's contract for work to be performed on a project is one hundred twenty-five thousand dollars ($125,000) or more.

8. Assignment

The Contractor shall not assign or transfer any interest in this Contract or assign any claims for money due or to become due under this Contract without the prior written approval of the City.

9. Subcontracting

The Contractor shall not subcontract any portion of the services to be performed under this Contract without the prior written approval of the City. No such subcontract shall relieve the primary Contractor from its obligations and liabilities under this Contract, nor shall any subcontract obligate direct payment from the City.

10. Release

Final payment of the amounts due under this Contract shall operate as a release of the City, its officers and employees from all liabilities, claims and obligations whatsoever arising from or under this Contract.

11. Confidentiality

Any confidential information provided to or developed by the Contractor in the performance of this Contract shall be kept confidential and shall not be made available to any individual or organization by the Contractor without the prior written approval of the City.

12. Product of Service – Copyright

All materials developed or acquired by the Contractor under this Contract shall become the property of the City and shall be delivered to the City no later than the termination date of this Contract. Nothing developed or produced, in whole or in part, by the Contractor under this Contract shall be the subject of an application for copyright or other claim of ownership by or on behalf of the Contractor.

13. Conflict of Interest; Governmental Conduct Act

A. The Contractor represents and warrants that it presently has no interest and, during the term of this Contract, shall not acquire any interest, direct or indirect, which would conflict in any manner or degree with the performance or services required under the Contract.

B. The Contractor further represents and warrants that it has complied with, and, during the term of this Contract, will continue to comply with, and that this Contract complies with all applicable provisions of the Governmental Conduct Act, NMSA 1978, Chapter 10, Article 16.

C. Contractor's representations and warranties in Paragraphs A and B of this Article 12 are material representations of fact upon which the City relied when this Contract was entered into by the parties. Contractor shall provide immediate written notice to the City if, at any time during the term of this Contract, Contractor learns that Contractor's representations and warranties in Paragraphs A and B of this Article 12 were erroneous on the effective date of this Contract or have become erroneous by reason of new or changed circumstances. If it is later determined that Contractor's representations and warranties in Paragraphs A and B of this Article 12 were erroneous on the effective date of this Contract or have become erroneous by reason of new or changed circumstances, in addition to other remedies available to the City and notwithstanding anything in the Contract to the contrary, the City may immediately terminate the Contract.

D. All terms defined in the Governmental Conduct Act have the same meaning in this section.

14. Amendment

A. This Contract shall not be altered, changed or amended except by instrument in writing executed by the parties hereto and all other required signatories.

B. If the City proposes an amendment to the Contract to unilaterally reduce funding due to budget or other considerations, the Contractor shall, within thirty (30) days of receipt of the proposed Amendment, have the option to terminate the Contract, pursuant to the termination provisions as set forth in Article 4 herein, or to agree to the reduced funding.

15. Change Orders

A. Changes. The Contractor may only make changes or revisions within the Scope of Work as defined by Article 1 and/or Exhibit 1 after receipt of written approval by the City Manager or his/her designee. Such change may only be made to Tasks or Sub-Task as defined in the Scope of Work. Under no circumstance shall such change affect the:

i. Deliverable requirements, as outlined in the Scope of Work;
ii. Due date of any Deliverable, as outlined in the Scope of Work;
iii. Compensation of any Deliverable, as outlined in the Scope of Work;
iv. Contract compensation, as outlined in Article 2; or
v. Contract termination, as outlined in Article 4.

B. Change Request Process. In the event that circumstances warrant a change to accomplish the Scope of Work as described above, a Change Request shall be submitted that meets the following criteria:

i. The Project Manager shall draft a written Change Request for review and approval by the City Manager to include:
   (a) the name of the person requesting the change;
   (b) a summary of the required change;
   (c) the start date for the change;
   (d) the reason and necessity for change;
   (e) the elements to be altered; and
   (f) the impact of the change.

ii. The City Manager shall provide a written decision on the Change Request to the Contractor within a maximum of ten (10) Business Days of receipt of the Change Request. All decisions made by the City Manager are final. Change Requests, once approved, become a part of the Contract, and become binding as a part of the original Contract.

16. Merger

This Contract incorporates all the agreements, covenants, and understandings between the parties hereto concerning the subject matter hereof, and all such covenants, agreements and understandings have been merged into this written contract.

All terms and conditions of **ITB No. 25163** and the Contractor's response to such document(s) are incorporated herein by reference and included in the order of precedence.

No prior Agreement or understanding, oral or otherwise, of the parties or their agents shall be valid or enforceable unless embodied in this Contract.

17. Penalties for Violation of Law

NMSA 1978, Sections 13-1-28 through 13-1-199, imposes civil and criminal penalties for its violation. In addition, the New Mexico criminal statutes impose felony penalties for illegal bribes, gratuities and kickbacks.

18. Equal Opportunity Compliance

The Contractor agrees to abide by all federal and state laws and rules and regulations, and Santa Fe City Code, pertaining to equal employment opportunity. In accordance with all such laws of the State of New Mexico, the Contractor assures that no person in the United States shall, on the grounds of race, religion, color, national origin, ancestry, sex, age, physical or mental handicap, or serious medical condition, spousal affiliation, sexual orientation or gender identity, be excluded from employment with or participation in, be denied the benefits of, or be otherwise subjected to discrimination under any program or activity performed under this Contract. If Contractor is found not to be in compliance with these requirements during the life of this Contract, Contractor agrees to take appropriate steps to correct these deficiencies.

19. Applicable Law

The laws of the State of New Mexico shall govern this Contract, without giving effect to its choice of law provisions. Venue shall be proper only in a New Mexico court of competent jurisdiction in accordance with NMSA 1978, Section 38-3-2. By execution of this Contract, Contractor acknowledges and agrees to the jurisdiction of the courts of the State of New Mexico over any and all lawsuits arising under or out of any term of this Contract.

20. Workers' Compensation

The Contractor agrees to comply with state laws and rules applicable to workers compensation benefits for its employees. If the Contractor fails to comply with the Workers Compensation Act and applicable rules when required to do so, this Contract may be terminated by the City.

21. Other Insurance

If the services contemplated under this Contract will be performed on or in City facilities or property, Contractor shall maintain in force during the entire term of this Contract, the following insurance coverage(s), naming the City as additional insured.

A. **Commercial General Liability** insurance shall be written on an occurrence basis and be a broad as ISO Form CG 00 01 with limits not less than $2,000,000 per occurrence and $2,000,000 in the aggregate for claims against bodily injury, personal and advertising injury, and property damage. Said policy shall include broad form Contractual Liability coverage and be endorsed to name the City of Santa Fe their officials, officers, employees, and agents as additional insureds.

B. **Business Automobile Liability** insurance for all owned, non-owned automobiles, with a combined single limit not less than $1,000,000 per accident.

C. **Broader Coverage and Limits**. The insurance requirements under this Contract shall be the greater of (1) the minimum coverage and limits specified in this Contract, or (2) the broader coverage and maximum limits of coverage of any insurance policy or proceeds available to the Named Insured. It is agreed that these insurance requirements shall not in any way act to reduce coverage that is broader or that includes higher limits than the minimums required herein. No

representation is made that the minimum insurance requirements of this Contract are sufficient to cover the obligations of Contractor hereunder.

D. Contractor shall maintain the above insurance for the term of this Contract and name the City as an additional insured and provide for 30 days cancellation notice on any Certificate of Insurance form furnished by Contractor. Such certificate shall also specifically state the coverage provided under the policy is primary over any other valid and collectible insurance and provide a waiver of subrogation.

22. Records and Financial Audit

The Contractor shall maintain detailed time and expenditure records that indicate the date; time, nature and cost of services rendered during the Contract's term and effect and retain them for a period of three (3) years from the date of final payment under this Contract. The records shall be subject to inspection by the City. The City shall have the right to audit billings both before and after payment. Payment under this Contract shall not foreclose the right of the City to recover excessive or illegal payments

23. Indemnification

The Contractor shall indemnify, hold harmless, or insure the City, including its officers, employees or agents, against liability, claims, damages, losses or expenses, including attorney fees, only to the extent that the liability, damages, losses or costs are caused by, or arise out of, the acts or omissions of the indemnitor or its officers, employees or agents. In the event that any action, suit or proceeding related to the services performed by the Contractor or any officer, agent, employee, servant or subcontractor under this Contract is brought against the Contractor, the Contractor shall, as soon as practicable but no later than two (2) business days after it receives notice thereof, notify the legal counsel of the City.

24. New Mexico Tort Claims Act

Any liability incurred by the City of Santa Fe in connection with this Contract is subject to the immunities and limitations of the New Mexico Tort Claims Act, NMSA 1978, Section 41-4-1, et. seq., as amended. The City and its "public employees" as defined in the New Mexico Tort Claims Act, do not waive sovereign immunity, do not waive any defense and do not waive any limitation of liability pursuant to law. No provision in this Contract modifies or waives any provision of the New Mexico Tort Claims Act.

25. Invalid Term or Condition

If any term or condition of this Contract shall be held invalid or unenforceable, the remainder of this Contract shall not be affected and shall be valid and enforceable.

26. Enforcement of Contract

A party's failure to require strict performance of any provision of this Contract shall not waive or diminish that party's right thereafter to demand strict compliance with that or any other provision. No waiver by a party of any of its rights under this Contract shall be effective unless express and in writing,

and no effective waiver by a party of any of its rights shall be effective to waive any other rights.

27. Notices

Any notice required to be given to either party by this Contract shall be in writing and shall be delivered in person, by courier service or by U.S. mail, either first class or certified, return receipt requested, postage prepaid, as follows:

To the City:	**To the Contractor:**
Chief Procurement Officer purchasing@santafenm.gov PO Box 909 Santa Fe, NM 87504-0909 Caryn Grosse, PMP Project Manager III City of Santa Fe Public Works 2651 Siringo Road, Building E Santa Fe, NM 87505-5229 clgrosse@santafenm.gov (505) 955-5938	Matt Kingsley Operations Manager Enviroworks LLC PO Box 340 Edgewood, NM 87015 mkingsley@enviroworksforyou.com 980-525-9426

28. Authority

If Contractor is other than a natural person, the individual(s) signing this Contract on behalf of Contractor represents and warrants that he or she has the power and authority to bind Contractor, and that no further action, resolution, or approval from Contractor is necessary to enter into a binding contract.

29. Progress Payments

Based upon Application for Payment submitted to the City by the Contractor and Certificates for Payment issued by the City, the City shall make progress payments on account of the Contract sum to the Contractor as provided in the Contract documents for the period ending the last day of the month as follows:

Not later than twenty-one (21) days following the end of the period covered by the Application for Payment, one hundred percent (100%) of the portion of the Contract Sum properly allocable to labor, materials, and equipment incorporated in the work and one hundred percent (100%) of the portion of the Contract sum properly allocable to materials and equipment suitably stored at the site or some other location agreed upon in writing for the period covered by the Application for Payment, less the aggregate of previous payments made by the City; and upon substantial completion of the entire work, a sum sufficient to increase the total payments to one hundred percent (100%) of the Contract sum, less such amounts as the City shall determine for all incomplete work and unsettled claims as provided in the Contract documents.

30. Final Payment

Final payment, constituting the entire unpaid balance of the Contract sum, unless it is a disputed payment, shall be paid by the City to the Contractor within twenty-one (21) calendar days, after all deficiencies to the Contract document that were noted during the Substantial Completion Inspection and listed on the attachment to the Certificate of Substantial Completion have been corrected, and provided the Contract has been fully performed and a final Certificate for Payment has been issued by the City. In addition, the Contractor shall provide to the City a certified statement of Release of Lien (AIA Document G706A or approved form), Consent of Surety, Warranty from Prime Contractor, Warranties from Suppliers and Manufacturers, training sessions, equipment/operating manuals, and as-built drawings.

31. Schedule

The Contractor shall, within five (5) days after the effective date of Notice to Proceed, prepare and submit a progress schedule covering project operations for the 30-day Contract period. This progress schedule shall be of the type generally referred to as a Critical Path Method (CPM), Critical Path Schedule (CPS), and Critical Path Analysis (CPA), and other similar designations. The CPM shall be used to control the timing and sequences of the project. All work shall be done in accordance with the CPM Planning and Scheduling. A written statement of explanation shall be submitted with the progress schedule. All costs incurred by the contractor to implement the CPM shall be borne by the Contractor and are part of their Contract.

32. General and Special Provisions

A. Terms used in this Contract which are defined in the Conditions of the Contract shall have the meanings designated in those Conditions.

B. An enumeration of the Contractor's General Comprehensive Liability Insurance requirements.

C. Appears in the General Conditions of the Contract for construction. Insurance requirements are also described in the Instructions to the Bidder section of the Project Manual. Contractor shall maintain adequate insurance in at least the maximum amounts, which the City could be liable under the New Mexico Tort Claims Act and shall provide proof of such insurance coverage to the City. It is the sole responsibility of the Contractor to comply with the law.

D. This Contract shall not become effective until: (1) approved by the Governing Body; and (2) signed by all parties required to sign this Contract.

E. The Contractor shall maintain detailed time records which indicate the date, time and nature of services rendered. These records shall be subject to inspection by the City, the Department of Finance and Administration and the State Auditor. The City shall have the right to audit billings both before and after payment. Payment under this Contract shall not foreclose the right of the City to recover excessive illegal payments.

F. The Contractor warrants that the Contractor presently has no interest and shall not acquire any interest, direct or indirect, which would conflict in any manner or degree with the performance or services required under this Contract.

G. The Contractor hereby warrants that the Contractor complies with the Americans with Disabilities Act, 29 CFR 1630.

H. Gender, Singular/Plural. Words of any gender used in this Contract shall be held and construed to include any other gender, and words in the singular number shall be held to include the plural, unless the context otherwise requires.

I. Captions and Section Headings. The captions and section headings contained in this Contract are for convenience of reference only, and in no way limit, define, or enlarge the terms, scope, and conditions of this Contract.

J. Certificates and Documents Incorporated. All certificates and documentation required by the provisions of the Contract shall be attached to this Contract at the time of execution and are hereby incorporated by reference as though set forth in full in this Contract to the extent they are consistent with its conditions and terms.

K. Separability. If any clause or provision of this Contract is illegal, invalid or unenforceable under present or future laws effective during the term of this Contract, then and in that event, it is the intention of the parties hereto that the remainder of this Contract shall not be affected thereby.

L. Words and Phrases. Words, phrases, and abbreviations, which have well-known technical or trade meanings used in the Contract documents shall be used according to such recognized meaning. In the event of a conflict, the more stringent meaning shall govern.

M. Relationship of Contract Documents. The Contract Documents are complementary, and any requirement of one Contract Document shall be as binding as if required by all.

N. Pursuant to NMSA 1978, Section 13-1-191, reference is hereby made to the Criminal Laws of New Mexico (including NMSA 1978, Sections 30-14-1, 30-24-2, and 30-41-1 through 30-41-3) which prohibit bribes, kickbacks, and gratuities, violation of which constitutes a felony. Further, the Procurement Code (NMSA 1978, Sections 13-1-28 through 13-1-199) imposes civil and criminal penalties for its violation.

O. Pursuant to NMSA 1978, Section 13-4-11. Reference is hereby made to the Minimum Wage on Public Works; weekly payments; posting wage scale; withholding funds.

IN WITNESS WHEREOF, the Parties have executed this Contract as of the date of the signature by the required approval authorities below.

CITY OF SANTA FE:

ALAN WEBBER, MAYOR

DATE: _____

CONTRACTOR:
Enviroworks LLC

Sean Grossetete (Nov 26, 2025 08:17:12 MST)

SEAN GROSSETETE, MANAGING MEMBER

DATE: Nov 26, 2025

NMBTIN: 02-397513-000

ATTEST:

ANDREA SALAZAR, CITY CLERK

Approved to form and legal sufficiency by:

Kevin L. Nault
Kevin L. Nault (Dec 2, 2025 08:41:14 MST)

ASSISTANT CITY ATTORNEY

APPROVED FOR FINANCES:

BRIAN MOYA

~~EMILY OSTER, FINANCE DIRECTOR~~
Chief Brian Moya, Interim City Manager

Exhibit A

Bidder Instructions:

Items - Bidders do not have the ability to add or delete items.

Approx. Qty. - Quantities provides are estimates, only, and do not establish a definite quantity contract. Actual quantities purchased under a resulting agreement may vary.
UOM (Unit of Measure) **-** Bidders do not have the ability to change the UOM. Any variation from the UOM identified may be provided in the Comments.
Article and Description - Bidder cannot change Article and Description. Any clarification, explanation, brand name identification, etc. must be provided in the Comments.
Unit Price - Bidders must provide pricing that conforms with the identified Unit Price.
Comments - Bidders may only provide comments to explain or clarify an item, identify a brand name, or provide information as specifically stated in the corresponding ITB

Item	Approx. Qty.	UOM	Article and Description	Unit Price	Comments
			Wage Rates for Projects Under $60,000.00		
1	1	HR - Hour	Superintendent - Regular Hourly Rate	$85.00	
2	1	HR - Hour	Superintendent - Overtime Hourly Rate	$127.50	
3	1	HR - Hour	Journeyman or Experienced Worker - Regular Hourly Rate	$50.00	
4	1	HR - Hour	Journeyman or Experienced Worker - Overtime Hourly Rate	$75.00	
5	1	HR - Hour	Laborer - Regular Hourly Rate	$42.00	
6	1	HR - Hour	Laborer - Overtime Hourly Rate	$63.00	
			Wage Rates for Projects Over $60,000.00		
7	1	HR - Hour	Superintendent - Regular Hourly Rate	$85.00	
8	1	HR - Hour	Superintendent - Overtime Hourly Rate	$127.50	
9	1	HR - Hour	Journeyman or Experienced Worker - Regular Hourly Rate	$50.00	
10	1	HR - Hour	Journeyman or Experienced Worker - Overtime Hourly Rate	$75.00	
11	1	HR - Hour	Laborer - Regular Hourly Rate	$42.00	
12	1	HR - Hour	Laborer - Overtime Hourly Rate	$63.00	
13	1	Daily	Temporary Site Office Trailer, rental rate	$105.00	
14	1	Daily	Temporary Fencing, rental rate	$455.00	For 1,000 lineal feet of fence
15	1	Daily	Sanitary/toilet Facilities, rental rate	$35.00	
16		Percent	Discount off all materials. Enter zero if no discount is offered.	2%	

On-Call Construction ITB 25163_Enviroworks

Final Audit Report 2025-12-02

Created:	2025-11-25
By:	MATTHEW HARDING (mrharding@santafenm.gov)
Status:	Signed
Transaction ID:	CBJCHBCAABAA_MxYT1cx_Cm6GADDB7uWJtSKwXh1kSdh

"On-Call Construction ITB 25163_Enviroworks" History

Document created by MATTHEW HARDING (mrharding@santafenm.gov)
2025-11-25 - 9:18:10 PM GMT- IP address: 63.232.20.2

Document emailed to Sean Grossetete (sean@enviroworksforyou.com) for signature
2025-11-25 - 9:18:47 PM GMT

Email viewed by Sean Grossetete (sean@enviroworksforyou.com)
2025-11-25 - 9:37:39 PM GMT- IP address: 172.226.3.48

Document e-signed by Sean Grossetete (sean@enviroworksforyou.com)
Signature Date: 2025-11-26 - 3:17:12 PM GMT - Time Source: server- IP address: 98.97.114.55

Document emailed to Kevin Nault (klnault@santafenm.gov) for signature
2025-11-26 - 3:17:14 PM GMT

Email viewed by Kevin Nault (klnault@santafenm.gov)
2025-12-02 - 3:40:30 PM GMT- IP address: 63.232.20.2

Signer Kevin Nault (klnault@santafenm.gov) entered name at signing as Kevin L. Nault
2025-12-02 - 3:41:12 PM GMT- IP address: 63.232.20.2

Document e-signed by Kevin L. Nault (klnault@santafenm.gov)
Signature Date: 2025-12-02 - 3:41:14 PM GMT - Time Source: server- IP address: 63.232.20.2

Agreement completed.
2025-12-02 - 3:41:14 PM GMT

Powered by Adobe Acrobat Sign

CERTIFICATE OF LIABILITY INSURANCE

DATE (MM/DD/YYYY): 1/6/2026

THIS CERTIFICATE IS ISSUED AS A MATTER OF INFORMATION ONLY AND CONFERS NO RIGHTS UPON THE CERTIFICATE HOLDER. THIS CERTIFICATE DOES NOT AFFIRMATIVELY OR NEGATIVELY AMEND, EXTEND OR ALTER THE COVERAGE AFFORDED BY THE POLICIES BELOW. THIS CERTIFICATE OF INSURANCE DOES NOT CONSTITUTE A CONTRACT BETWEEN THE ISSUING INSURER(S), AUTHORIZED REPRESENTATIVE OR PRODUCER, AND THE CERTIFICATE HOLDER.

IMPORTANT: If the certificate holder is an ADDITIONAL INSURED, the policy(ies) must have ADDITIONAL INSURED provisions or be endorsed. If SUBROGATION IS WAIVED, subject to the terms and conditions of the policy, certain policies may require an endorsement. A statement on this certificate does not confer rights to the certificate holder in lieu of such endorsement(s).

PRODUCER	CONTACT NAME: Charlotte Maestas
Truecoverage LLC. 2400 Louisiana Blvd NE. Bldg 3 Suite 140 Albuquerque NM 87110	PHONE (A/C, No, Ext): (505) 657-4669 FAX (A/C, No): E-MAIL ADDRESS: charlotte.maestas@truecoverage.com

INSURER(S) AFFORDING COVERAGE	NAIC #
INSURER A : ARCH SPECIALTY INS CO	21199
INSURER B : ACCIDENT FUND GEN INS CO	12304
INSURER C :	
INSURER D :	
INSURER E :	
INSURER F :	

INSURED

Enviroworks, LLC
5 Cinnamon
Edgewood NM 87015

COVERAGES **CERTIFICATE NUMBER:** **REVISION NUMBER:**

THIS IS TO CERTIFY THAT THE POLICIES OF INSURANCE LISTED BELOW HAVE BEEN ISSUED TO THE INSURED NAMED ABOVE FOR THE POLICY PERIOD INDICATED. NOTWITHSTANDING ANY REQUIREMENT, TERM OR CONDITION OF ANY CONTRACT OR OTHER DOCUMENT WITH RESPECT TO WHICH THIS CERTIFICATE MAY BE ISSUED OR MAY PERTAIN, THE INSURANCE AFFORDED BY THE POLICIES DESCRIBED HEREIN IS SUBJECT TO ALL THE TERMS, EXCLUSIONS AND CONDITIONS OF SUCH POLICIES. LIMITS SHOWN MAY HAVE BEEN REDUCED BY PAID CLAIMS.

INSR LTR	TYPE OF INSURANCE	ADDL INSD	SUBR WVD	POLICY NUMBER	POLICY EFF (MM/DD/YYYY)	POLICY EXP (MM/DD/YYYY)	LIMITS	
A	[X] COMMERCIAL GENERAL LIABILITY [ ] CLAIMS-MADE [X] OCCUR [X] [ ] GEN'L AGGREGATE LIMIT APPLIES PER: [X] POLICY [ ] PRO-JECT [ ] LOC [ ] OTHER:	Y	Y	12EMP7194713	01/01/2026	01/01/2027	EACH OCCURRENCE DAMAGE TO RENTED PREMISES (Ea occurrence) MED EXP (Any one person) PERSONAL & ADV INJURY GENERAL AGGREGATE PRODUCTS - COMP/OP AGG 	$ 1,000,000 $ 100,000 $ 5,000 $ 1,000,000 $ 2,000,000 $ 2,000,000 $
	AUTOMOBILE LIABILITY [ ] ANY AUTO [ ] OWNED AUTOS ONLY [ ] SCHEDULED AUTOS [ ] HIRED AUTOS ONLY [ ] NON-OWNED AUTOS ONLY [ ] [ ]						COMBINED SINGLE LIMIT (Ea accident) BODILY INJURY (Per person) BODILY INJURY (Per accident) PROPERTY DAMAGE (Per accident) 	$ $ $ $ $
A	[X] UMBRELLA LIAB [X] OCCUR EXCESS LIAB [ ] CLAIMS-MADE [ ] DED [ ] RETENTION $			12EMX7194813	01/01/2026	01/01/2027	EACH OCCURRENCE AGGREGATE 	$ 4,000,000 $ 4,000,000 $
B	WORKERS COMPENSATION AND EMPLOYERS' LIABILITY Y / N ANY PROPRIETOR/PARTNER/EXECUTIVE OFFICER/MEMBER EXCLUDED? [ ] (Mandatory in NH) If yes, describe under DESCRIPTION OF OPERATIONS below	N / A	Y	WCP100102002	01/01/2026	01/01/2027	[ ] PER STATUTE [ ] OTH-ER E.L. EACH ACCIDENT E.L. DISEASE - EA EMPLOYEE E.L. DISEASE - POLICY LIMIT	 $ 1,000,000 $ 1,000,000 $ 1,000,000

DESCRIPTION OF OPERATIONS / LOCATIONS / VEHICLES (ACORD 101, Additional Remarks Schedule, may be attached if more space is required)

See ACORD 101

CERTIFICATE HOLDER

City of Santa Fe
200 Lincoln Ave
PO Box 909
Santa Fe NM 87504

CANCELLATION

SHOULD ANY OF THE ABOVE DESCRIBED POLICIES BE CANCELLED BEFORE THE EXPIRATION DATE THEREOF, NOTICE WILL BE DELIVERED IN ACCORDANCE WITH THE POLICY PROVISIONS.

AUTHORIZED REPRESENTATIVE

Charlotte Maestas

© 1988-2015 ACORD CORPORATION. All rights reserved.

CERTIFICATE OF LIABILITY INSURANCE

DATE (MM/DD/YYYY): 01/05/2026

THIS CERTIFICATE IS ISSUED AS A MATTER OF INFORMATION ONLY AND CONFERS NO RIGHTS UPON THE CERTIFICATE HOLDER. THIS CERTIFICATE DOES NOT AFFIRMATIVELY OR NEGATIVELY AMEND, EXTEND OR ALTER THE COVERAGE AFFORDED BY THE POLICIES BELOW. THIS CERTIFICATE OF INSURANCE DOES NOT CONSTITUTE A CONTRACT BETWEEN THE ISSUING INSURER(S), AUTHORIZED REPRESENTATIVE OR PRODUCER, AND THE CERTIFICATE HOLDER.

IMPORTANT: If the certificate holder is an ADDITIONAL INSURED, the policy(ies) must have ADDITIONAL INSURED provisions or be endorsed. If SUBROGATION IS WAIVED, subject to the terms and conditions of the policy, certain policies may require an endorsement. A statement on this certificate does not confer rights to the certificate holder in lieu of such endorsement(s).

PRODUCER	CONTACT NAME: Melissa Martinez	
AIS, LLC DBA Atlas Insurance Services 2009 Eubank Blvd NE Albuquerque NM 87112	PHONE (A/C, No, Ext): (505) 559-5888	FAX (A/C, No): (505) 323-5652
	E-MAIL ADDRESS: melissam@aisnm.com	
	INSURER(S) AFFORDING COVERAGE	NAIC #
	INSURER A : Selective Ins Co of SC	19259
INSURED Enviroworks, LLC EW Rents LLC PO Box 340 Edgewood NM 87015	INSURER B :	
	INSURER C :	
	INSURER D :	
	INSURER E :	
	INSURER F :	

COVERAGES MM **CERTIFICATE NUMBER:** Cert ID 21203 (270) **REVISION NUMBER:**

THIS IS TO CERTIFY THAT THE POLICIES OF INSURANCE LISTED BELOW HAVE BEEN ISSUED TO THE INSURED NAMED ABOVE FOR THE POLICY PERIOD INDICATED. NOTWITHSTANDING ANY REQUIREMENT, TERM OR CONDITION OF ANY CONTRACT OR OTHER DOCUMENT WITH RESPECT TO WHICH THIS CERTIFICATE MAY BE ISSUED OR MAY PERTAIN, THE INSURANCE AFFORDED BY THE POLICIES DESCRIBED HEREIN IS SUBJECT TO ALL THE TERMS, EXCLUSIONS AND CONDITIONS OF SUCH POLICIES. LIMITS SHOWN MAY HAVE BEEN REDUCED BY PAID CLAIMS.

INSR LTR	TYPE OF INSURANCE	ADDL INSD	SUBR WVD	POLICY NUMBER	POLICY EFF (MM/DD/YYYY)	POLICY EXP (MM/DD/YYYY)	LIMITS	
	COMMERCIAL GENERAL LIABILITY						EACH OCCURRENCE	$
	☐ CLAIMS-MADE ☐ OCCUR						DAMAGE TO RENTED PREMISES (Ea occurrence)	$
							MED EXP (Any one person)	$
							PERSONAL & ADV INJURY	$
	GEN'L AGGREGATE LIMIT APPLIES PER:						GENERAL AGGREGATE	$
	☐ POLICY ☐ PRO-JECT ☐ LOC						PRODUCTS - COMP/OP AGG	$
	☐ OTHER:							$
A	AUTOMOBILE LIABILITY						COMBINED SINGLE LIMIT (Ea accident)	$ 1,000,000
	☒ ANY AUTO	Y	Y	S 2324181-05	01/01/2026	01/01/2027	BODILY INJURY (Per person)	$
	☐ OWNED AUTOS ONLY ☐ SCHEDULED AUTOS						BODILY INJURY (Per accident)	$
	☐ HIRED AUTOS ONLY ☐ NON-OWNED AUTOS ONLY						PROPERTY DAMAGE (Per accident)	$
								$
	☐ UMBRELLA LIAB ☐ OCCUR						EACH OCCURRENCE	$
	☐ EXCESS LIAB ☐ CLAIMS-MADE						AGGREGATE	$
	☐ DED ☐ RETENTION $							$
	WORKERS COMPENSATION AND EMPLOYERS' LIABILITY Y / N						☐ PER STATUTE ☐ OTH-ER	
	ANYPROPRIETOR/PARTNER/EXECUTIVE OFFICER/MEMBER EXCLUDED? ☐	N / A					E.L. EACH ACCIDENT	$
	(Mandatory in NH)						E.L. DISEASE - EA EMPLOYEE	$
	If yes, describe under DESCRIPTION OF OPERATIONS below						E.L. DISEASE - POLICY LIMIT	$
A	Equipment Floater			S 2324181-05	01/01/2026	01/01/2027	Leased/Rented Equip	$ 500,000
A	Motor Truck Cargo			S2324181-05	01/01/2026	04/01/2027	Per Vehicle	$ 500,000

DESCRIPTION OF OPERATIONS / LOCATIONS / VEHICLES (ACORD 101, Additional Remarks Schedule, may be attached if more space is required)

City of Santa Fe is additional insured as required by written contract and per policy terms and conditions. Insured's Policy contains a "Blanket Additional Insured" provision that establishes the scope of Additional Insured coverage granted to Certificate Holder. Where permitted by state law, the insurer waives its right to subrogate against the certificate holder by reason of payments made under insured's policy, but only under the circumstances stated in the policy.

CERTIFICATE HOLDER

City of Santa Fe

200 Lincoln Ave
PO Box 909
Santa Fe NM 87504

CANCELLATION

SHOULD ANY OF THE ABOVE DESCRIBED POLICIES BE CANCELLED BEFORE THE EXPIRATION DATE THEREOF, NOTICE WILL BE DELIVERED IN ACCORDANCE WITH THE POLICY PROVISIONS.

AUTHORIZED REPRESENTATIVE

© 1988-2015 ACORD CORPORATION. All rights reserved.

From: DUTTON-LEYDA, TRAVIS K.
To: KAHAHANE, ELIZABETH L.
Cc: Purchasing DET
Subject: Re: Determination Request – Miscellaneous General Contracting work for the City of Santa Fe
Date: Wednesday, August 20, 2025 9:05:00 AM
Attachments: image001.png

Hi, this is construction.

Thank you.

Regards,

Travis Dutton-Leyda
Chief Procurement Officer
City of Santa Fe
200 Lincoln Avenue
Santa Fe, NM 87501
505-629-8351
tkduttonleyda@santafenm.gov

https://santafenm.gov/finance-2/purchasing-1

CITY OF SANTA FE | FACILITIES

Vision without action is merely a dream.
Action without vision passes the time.
Vision with action can change the world. ~ Joel A. Barker

> On Aug 20, 2025, at 8:56 AM, KAHAHANE, ELIZABETH L. <elkahahane@santafenm.gov> wrote:
>
> Aloha Purchasing!
>
> Facilities Division is requesting a SOW determination for the following:
>
> > The Contractor shall perform the following work in accordance with their Bid Pricing, attached hereto and made a part thereof, as Exhibit A:
> > 1. This work shall include Miscellaneous General Contracting work for the City

of Santa Fe.

2. The Contractor shall be required to provide On-Call General Contracting Services for any number of the activities listed under this Scope of Work upon the request of the City. Once a need is identified, the City will issue a written Task Order to the Contractor detailing the services required. Upon receiving the City's request for services, the Contractor shall promptly provide the City with an estimate (based upon the rates submitted in the Bid Form), cost summary, and project schedule required to complete the assignment or task. Project schedules, negotiated price, and completion dates shall be determined on a project-by-project basis and dependent upon the urgency of that task. The Contractor may be required to do some of the work in phases. The Contractor shall be required to provide the requested labor and all equipment and materials within one week of a request issuance of a Notice to Proceed unless otherwise arranged. The Contractor shall agree to provide required labor within 24 hours for emergency situations whenever possible.

3. The City of Santa Fe Public Works Facilities Division shall be able to utilize this On-Call Contract as needed and as funding is available. All other City of Santa Fe staff will only be authorized to utilize this On-Call Contract with prior, written approval of the scope of work, from the Facilities Division Director, before commencing any work applicable to this On-Call Contract.

4. Contractor is responsible for all required permits and licenses required to perform this work. Contractor shall be responsible for adherence to the Contract Documents, Construction Documents, Specifications, and approved directives.

5. Contractor shall be responsible for any applicable Local, County, State and Federal requirements and permits.

6. Contractor shall be responsible for verifications of all existing conditions, measurements, and dimensions for bidding. Contractor shall be responsible for all permits, fees, and State and/or City inspections associated with their work.

Please let me know if additional information is required.
Thank you!

Best,
Elizabeth "Lisa" Kahahane, CPO
Contract Administrator | Facilities Division | Public Works Dept.
Email: elkahahane@santafenm.gov
M: (505) 795-2439
O: (505) 955-5934

CITY OF SANTA FE
FACILITIES

This e-mail and any attachments may contain confidential information and/or

information protected by intellectual property rights for the exclusive attention of the intended addressees. If you have received this transmission in error, please immediately notify the sender by return e-mail and delete this message and its attachments. Unauthorized use, copying or further full or partial distribution of this e-mail or its contents is prohibited.

Services Offered to the City of Santa Fe (FY26)

Approved:
These services have been approved by the New Mexico Council for Purchasing from Persons with Disabilities and are available through Horizons of New Mexico.

- ADA Accessibility Consulting Services
- Auctioneering Services
- Bulk Mailing and Sorting
- Call Center Services
- Computer Refurbishing
- Courier Services
- Decontamination, Sanitation and Sterilization Services
- Debris Removal
- Document Imaging
- Document Shredding
- Envelope Stuffing
- General Labor
- Hard Drive Destruction
- Janitorial and Housekeeping Services – Including Carpet Cleaning & Floor Care
- Landscape Irrigation
- Landscaping
- Mailing Services
- Management of an Assistive Technology Reuse and Recycling Program
- Medical Waste Disposal
- Meeting Minute Preparation Services
- Pest Control and Extermination Services
- Printing Services
- Rest Area Maintenance
- Screen Printing
- Snow Removal
- Temporary Staffing Services
- Yard, Grounds, and Lawn Maintenance

Permissive:
The services have been approved by the New Mexico Council for Purchasing from Persons with Disabilities as permissible for sale under the State Use Act through Horizons of New Mexico. While the Council recognizes that certain Horizons of New Mexico members are capable of performing the services listed below, said services are considered permissive and excluded from the mandatory aspect of the State Use Program. Any procurement of the below services through Horizons of New Mexico is at the discretion of the purchasing agent and will be considered by the Council on a case-by-case basis.

- Graphic Design
- Graphic Design - Logo Design
- IT – Enterprise Application
- IT – IV & V
- IT Network and Database Management
- IT Support
- IT Security Services
- IT – Web Design
- IT – Web Programmer
- Marketing
- Social Media Marketing

For the complete State Use service list, please go to: http://horizonsofnewmexico.org/services.html

GB Packet_EnviroWorks_On-Call GC ITB 25163

Final Audit Report 2025-12-08

Created:	2025-12-05
By:	Elizabeth Kahahane (elkahahane@santafenm.gov)
Status:	Signed
Transaction ID:	CBJCHBCAABAAIAx8wsCo-d4jsfGJbxupvhtoyxlxVxRc

"GB Packet_EnviroWorks_On-Call GC ITB 25163" History

Document created by Elizabeth Kahahane (elkahahane@santafenm.gov)
2025-12-05 - 6:20:33 PM GMT- IP address: 63.232.20.2

Document emailed to CARYN GROSSE (clgrosse@santafenm.gov) for signature
2025-12-05 - 6:22:49 PM GMT

Email viewed by CARYN GROSSE (clgrosse@santafenm.gov)
2025-12-05 - 6:47:01 PM GMT- IP address: 104.47.65.254

Document e-signed by CARYN GROSSE (clgrosse@santafenm.gov)
Signature Date: 2025-12-05 - 6:47:22 PM GMT - Time Source: server- IP address: 63.232.20.2

Document emailed to Timothy Farrell (tgfarrell@santafenm.gov) for signature
2025-12-05 - 6:47:24 PM GMT

Email viewed by Timothy Farrell (tgfarrell@santafenm.gov)
2025-12-05 - 6:55:32 PM GMT- IP address: 104.47.65.254

Document e-signed by Timothy Farrell (tgfarrell@santafenm.gov)
Signature Date: 2025-12-05 - 6:55:49 PM GMT - Time Source: server- IP address: 174.56.2.34

Document emailed to JOHN BURNETT (jsburnett@santafenm.gov) for signature
2025-12-05 - 6:55:52 PM GMT

Email viewed by JOHN BURNETT (jsburnett@santafenm.gov)
2025-12-08 - 2:51:41 PM GMT- IP address: 71.228.98.124

Document e-signed by JOHN BURNETT (jsburnett@santafenm.gov)
Signature Date: 2025-12-08 - 2:52:02 PM GMT - Time Source: server- IP address: 71.228.98.124

Powered by Adobe Acrobat Sign

Agreement completed.

2025-12-08 - 2:52:02 PM GMT

CITY OF SANTA FE

Date: December 3, 2025

To: Governing Body

From: Caryn Grosse, PMP, Public Works Project Manager III

Via: Sam Burnett, Interim Public Works Department Director JOHN BURNETT (Dec 8, 2025 07:51:22 MST)
Tim Farrell, Interim Facilities Division Director Timothy Farrell

Subject: On-Call Price Agreement for City-Wide Miscellaneous Construction Services

Vendor Name: LLR Construction LLC

Vendor Number: 10936

ACTION:
Request for Approval of an On-Call Price Agreement with LLR Construction LLC in the Total Amount of $10,000,000 Including NMGRT for City-Wide Miscellaneous Construction Services for a Term of 10 Years. (Caryn Grosse, Public Works Project Manager III, clgrosse@santafenm.gov)

CONTRACT NUMBER:
The FY26 Munis Contract Number is 3260211.

BACKGROUND AND SUMMARY:
The Public Works Department Facilities Division uses on-call services to augment the skills, licensure, and capacity of staff to address facility issues and emergencies in a timely, safe, and compliant manner. The Facilities Division typically maintains on-call contracts for general contracting, mechanical, electrical, plumbing, roofing, remediation, and landscaping services.

In accordance with the Invitation to Bid (ITB No. 25163) for On-Call City-Wide Miscellaneous Construction Services, multiple responsive vendors were selected for contracts based on lowest bidder and performance criteria: AnchorBuilt Inc., B&D Industries Inc., Davenport Construction Management LLC, Enviroworks LLC, JDR & Associates, LLR Construction LLC, and Unified Contractor, Inc. This is the City's first construction contract with LLR Construction.

On-call contracts are not a guarantee of payment. These contracts are only used, and purchase orders issued, as needs arise and funding is available. The $10,000,000 (including 8.1875% NMGRT) maximum for this contract is based on the historical and anticipated needs across the City over the next ten years.

ATTACHMENTS:
On-Call Price Agreement for Construction Services
Proposal – Exhibit A
Certificate of Insurance
CPO Determination
Horizons Service List

PROCUREMENT METHOD:
The procurement method for this contract is the Invitation to Bid No. 25163, dated April 24, 2025.

Chief Procurement Officer (CPO)/Designee: _____ Date: 12/19/2025
CPO Comment/Exceptions: _____

FUNDING SOURCE:
Funding will be provided on a project-by-project basis.
Fund Name/Number: Various
Munis Org Name/Number: Various
Munis Object Name/Number: Various

Budget Officer/Designee: Andy Hopkins Date: 12/19/2025
Budget Officer Comment/Exceptions: _____

ASSOCIATED APPROVALS:
IT Components included? ☐ Yes | ☒ No
Approval: _____ Title: _____ Date: _____
Comment/Exceptions: _____

Treasury/Point of Sale Components included? ☐ Yes | ☒ No
Approval: _____ Title: _____ Date: _____
Comment/Exceptions: _____

Vehicles included? ☐ Yes | ☒ No
Approval: _____ Title: _____ Date: _____
Comment/Exceptions: _____

Construction to City Facilities, Furniture, and/or Fixtures, included? ☒ Yes | ☐ No
Approval: _____ Title: _____ Date: _____
Comment/Exceptions: Timothy Farrell

Is this an externally funded purchase? ☐ Yes | ☒ No
If yes, what is the issuing agency: _____
Approval: _____ Title: _____ Date: _____
Comment/Exceptions: _____

Capital Asset or Project? ☐ Yes | ☒ No
Project Ledger Number _____
Approval: _____ Title: _____ Date: _____
Comment/Exceptions: _____

Item #: _____
Munis Contract #: 3260211
ITB No.: 25163

CITY OF SANTA FE

ON-CALL PRICE AGREEMENT

CONSTRUCTION CONTRACT

City-Wide Miscellaneous Construction Services

THIS CONTRACT is made and entered into by and between the City of Santa Fe, New Mexico, hereinafter referred to as the "City," and **LLR Construction**, hereinafter referred to as the "Contractor," and is effective as of the date set forth below upon which it is executed by the Parties.

RECITALS

WHEREAS, the City, through its Governing Body, is authorized to enter into an On-Call Price Agreement for the project; and

WHEREAS, the City has procured this Contract according to the established State and Local Purchasing procedures for contracts of the type and amount; and

The City and the Contractor hereby agree as follows:

1. Scope of Work

A. The Contractor shall perform the following work in accordance with their Bid Pricing, attached hereto and made a part thereof, as Exhibit A:

1. This work shall include Miscellaneous General Contracting work for the City of Santa Fe.
2. The Contractor shall be required to provide On-Call Miscellaneous Construction Services for any number of the activities listed under this Scope of Work upon the request of the City. Once a need is identified, the City's Engineers, Project Managers, and Project Administrators (collectively "Project Manager") may issue Task Orders for items described herein. The terms and conditions shall be incorporated in each Task Order issued hereunder. Once a need is identified, the Project Manager will issue a written Task Order to the Contractor detailing the services required. Upon receiving the Task Order, the Contractor shall promptly provide the Project Manager with an estimate, based upon the rates included in their ITB, a cost summary, and a proposed schedule required to complete the assignment or task. Project schedules, negotiated price, and completion dates shall be determined on project-by-project basis and dependent upon the urgency of that task. The Contractor may be required to do some of the work in phases. The City's Project Manager

may issue a Notice to Proceed by signing the Notice after the task price and schedule are finalized by the Contractor, subject to the exception in Article 1(A)(3) below. The Contractor shall be required to provide the requested labor and all equipment and materials within one week of a request issuance of a Notice to Proceed unless otherwise arranged. The Contractor shall agree to provide required labor within 24 hours for emergency situations whenever possible. The Contractor shall not perform any work without a Notice to Proceed signed by the Project Manager, and the City shall not pay for any work performed without a signed Notice to Proceed.

3. If a Task Order does not specify which City division is issuing the Task Order, Contractor shall enquire before acting on a Notice to Proceed. For any City division other than the Public Works Facilities Division the Notice to Proceed is effective only if written approval of the scope of work from the Facilities Division Director is attached.

4. Contractor is responsible for all required permits, licenses, and inspections required to perform this work, and shall comply with applicable municipal, county, state, and federal requirements. Contractor shall be responsible for verification of all existing conditions, measurements, dimensions, adherence to the Contract Documents, Construction Documents, Specifications, and approved directives.

B. Distribution:

City:	Contractor:
Caryn Grosse, PMP Project Manager III City of Santa Fe Facilities Division 2651 Siringo Road, Building E Santa Fe, NM 87505-5229	Jenny Ramirez Project Manager LLR Construction 2015 Wyoming Blvd NE, Ste I Albuquerque, NM 87112

C. Price Adjustments:

The awarded vendor shall maintain fixed pricing for each year of this contract, defined as twelve (12) months starting on and including the Effective Date. Pricing may be adjusted no more than once annually to commercially reasonable rates through an amendment to the price list attached as Exhibit A signed by Contractor and the City's Director of Public Works. Amendments to Exhibit A do not alter Contractor's maximum total compensation pursuant to Article 2 (Compensation) below. The Contractor must submit all pricing increase requests in writing to the City of Santa Fe designated department contact, providing evidence that the request is based on demonstrable market changes impacting the cost of products and services. The request must itemize all proposed changes by line item and include supporting documentation deemed acceptable by the City of Santa Fe (such as a letter from a manufacturer indicating price increases, etc.). The City's decision on acceptable documentation in this context shall be final and binding upon all parties to the contract. No price increase shall result in a higher profit margin. Pricing changes will apply to orders entered on or after the effective date of the price change. Price increases will not be retroactive to purchase orders already issued. Orders will be filled at the price indicated in the purchase order issued by the City.

To facilitate prompt consideration, all requests for price increases must include the following information:

i. Contract Item Number

ii. Current Item Price
iii. Proposed New Price
iv. Percentage of Increase
v. Mill/Supplier Notification of price increase indicating percentage of increase and including the reason for the increase.

2. ITB Compensation

A. Payment. The City shall compensate the Contractor based on Task Orders and the itemized amounts specified in Exhibit A. For the services described in the scope of work, the City will pay the Contractor up to, but not to exceed, $10,000,000.00. The applicable gross receipts tax (8.1875%) shall be shown as a separate amount on each billing or request for payment made under the contract, consistent with NMSA 1978, Section 13-1-108.

B. The compensation represents a maximum amount. The Contractor must notify the City when the Services provided under this Contract approach 90% of compensation total. Services rendered beyond the maximum compensation amount will not be reimbursed unless the Contract is amended in writing prior to the provision of such services.

C. Invoicing and Payment Terms Payment will be made upon the City's acceptance of deliverables and receipt of a detailed, certified invoice from the Contractor. Payments will be sent to the Contractor's designated address. The City shall issue payment in accordance with the timelines required by law. Invoices must be submitted no later than fifteen (15) days after the Contract's termination. Late invoices will not be processed or paid.

D. Extended Payment Terms for Grant-Funded Contracts. For grant-funded agreements, the City may issue payment within forty-five (45) days following submission of an undisputed payment request.

3. Term

THIS CONTRACT SHALL NOT BECOME EFFECTIVE UNTIL APPROVED BY THE CITY. This Contract shall terminate ten (10) years from date of final signature unless terminated pursuant to Paragraph 4 (Termination) or Paragraph 5 (Appropriations). A contract for construction services may not exceed ten (10) years, including all extensions and renewals, except as otherwise provided by NMSA 1978, Section 13-1-150 through 13-1-152 or SFCC 1987, Section 11-13.

4. Termination

A. Grounds. The City may terminate this Contract for convenience or cause. For contracts within their authority, the City Manager or their designee is authorized to provide the notice of termination, otherwise such notice of termination shall be provided by the Mayor or their designee as authorized by the Governing Body. The Contractor may only terminate this Contract based upon the City's uncured, material breach of this Contract.

i. Except as otherwise provided in Paragraphs 7.A and 17, the City shall give Contractor written notice of termination at least thirty (30) days prior to the

intended date of termination.

ii. Contractor shall give City written notice of termination at least thirty (30) days prior to the intended date of termination, which notice shall (i) identify all the City's material breaches of this Contract upon which the termination is based and (ii) state what the City must do to cure such material breaches. Contractor's notice of termination shall only be effective (i) if the City does not cure all material breaches within the thirty (30) day notice period or (ii) in the case of material breaches that cannot be cured within thirty (30) days, the City does not, within the thirty (30) day notice period, notify the Contractor of its intent to cure and begin with due diligence to cure the material breach.

iii. Notwithstanding the foregoing, this Contract may be terminated immediately upon written notice to the Contractor (i) if the Contractor becomes unable to perform the services contracted for, as determined by the City; (ii) if, during the term of this Contract, the Contractor is suspended or debarred by the City; or (iii) the Contract is terminated pursuant to Paragraph 5, "Appropriations," of this Contract.

B. Liability. Except as otherwise expressly allowed or provided under this Contract, the City's sole liability upon termination shall be to pay for acceptable work performed prior to the Contractor's receipt or issuance of a notice of termination; provided, however, that a notice of termination shall not nullify or otherwise affect either party's liability for pre-termination defaults under or breaches of this Contract. The Contractor shall submit an invoice for such work within thirty (30) days of receiving or sending the notice of termination. *THIS PROVISION IS NOT EXCLUSIVE AND DOES NOT WAIVE THE CITY'S OTHER LEGAL RIGHTS AND REMEDIES CAUSED BY THE CONTRACTOR'S DEFAULT/BREACH OF THIS CONTRACT.*

5. Appropriations

The terms of this Contract are contingent upon sufficient appropriations and authorization being made by the Governing Body for the performance of this Contract. If sufficient appropriations and authorization are not made by the Governing Body, this Contract shall terminate immediately upon written notice being given by the City to the Contractor. The City's decision as to whether sufficient appropriations are available shall be accepted by the Contractor and shall be final. If the City proposes an amendment to the Contract to unilaterally reduce funding, the Contractor shall have the option to terminate the Contract or to agree to the reduced funding, within thirty (30) days of receipt of the proposed amendment.

6. Status of Contractor

The Contractor and its agents and employees are independent contractors performing construction services for the City and are not employees of the City. The Contractor and its agents and employees shall not accrue leave, retirement, insurance, bonding, use of City vehicles, or any other benefits afforded to employees of the City as a result of this Contract. The Contractor acknowledges that all sums received hereunder are reportable by the Contractor for tax purposes, including without limitation, self-employment and business income tax. The Contractor agrees not to purport to bind the City unless the Contractor has express written authority to do so, and then only within the strict limits of that authority.

7. On-Call Price Agreement Performance and Payment Bond

A. When a Task Order is issued in excess of twenty-five thousand dollars ($25,000), the following bonds or security shall be delivered to the City and shall become binding on the parties upon the execution of the contract. If the Contractor fails to deliver the required performance and payment bonds, the Contractor's bid shall be rejected, its bid security shall be enforced to the extent of actual damages. Award of the Task Order via Notice to Proceed shall be made pursuant to the Procurement Code in the following manner:

i. a performance bond satisfactory to the City, executed by a surety company authorized to do business in this state and said surety to be approved in federal circular 570 as published by the United States treasury department or the state board of finance or the local governing authority, in an amount equal to one hundred percent of the price specified in the contract; and

ii. a payment bond satisfactory to the City, executed by a surety company authorized to do business in this state and said surety to be approved in federal circular 570 as published by the United States treasury department or the state board of finance or the local governing authority, in an amount equal to one hundred percent of the price specified in the contract, for the protection of all persons supplying labor and material to the contractor or its subcontractors for the performance of the work provided for in the contract.

B. A subcontractor shall provide a performance and payment bond on a public works building project if the subcontractor's contract for work to be performed on a project is one hundred twenty-five thousand dollars ($125,000) or more.

8. Assignment

The Contractor shall not assign or transfer any interest in this Contract or assign any claims for money due or to become due under this Contract without the prior written approval of the City.

9. Subcontracting

The Contractor shall not subcontract any portion of the services to be performed under this Contract without the prior written approval of the City. No such subcontract shall relieve the primary Contractor from its obligations and liabilities under this Contract, nor shall any subcontract obligate direct payment from the City.

10. Release

Final payment of the amounts due under this Contract shall operate as a release of the City, its officers and employees from all liabilities, claims and obligations whatsoever arising from or under this Contract.

11. Confidentiality

Any confidential information provided to or developed by the Contractor in the performance of this Contract shall be kept confidential and shall not be made available to any individual or organization by the Contractor without the prior written approval of the City.

12. Product of Service – Copyright

All materials developed or acquired by the Contractor under this Contract shall become the property of the City and shall be delivered to the City no later than the termination date of this Contract. Nothing developed or produced, in whole or in part, by the Contractor under this Contract shall be the subject of an application for copyright or other claim of ownership by or on behalf of the Contractor.

13. Conflict of Interest; Governmental Conduct Act

A. The Contractor represents and warrants that it presently has no interest and, during the term of this Contract, shall not acquire any interest, direct or indirect, which would conflict in any manner or degree with the performance or services required under the Contract.

B. The Contractor further represents and warrants that it has complied with, and, during the term of this Contract, will continue to comply with, and that this Contract complies with all applicable provisions of the Governmental Conduct Act, NMSA 1978, Chapter 10, Article 16.

C. Contractor's representations and warranties in Paragraphs A and B of this Article 12 are material representations of fact upon which the City relied when this Contract was entered into by the parties. Contractor shall provide immediate written notice to the City if, at any time during the term of this Contract, Contractor learns that Contractor's representations and warranties in Paragraphs A and B of this Article 12 were erroneous on the effective date of this Contract or have become erroneous by reason of new or changed circumstances. If it is later determined that Contractor's representations and warranties in Paragraphs A and B of this Article 12 were erroneous on the effective date of this Contract or have become erroneous by reason of new or changed circumstances, in addition to other remedies available to the City and notwithstanding anything in the Contract to the contrary, the City may immediately terminate the Contract.

D. All terms defined in the Governmental Conduct Act have the same meaning in this section.

14. Amendment

A. This Contract shall not be altered, changed or amended except by instrument in writing executed by the parties hereto and all other required signatories.

B. If the City proposes an amendment to the Contract to unilaterally reduce funding due to budget or other considerations, the Contractor shall, within thirty (30) days of receipt of the proposed Amendment, have the option to terminate the Contract, pursuant to the termination provisions as set forth in Article 4 herein, or to agree to the reduced funding.

15. Change Orders

A. Changes. The Contractor may only make changes or revisions within the Scope of Work as defined by Article 1 and/or Exhibit 1 after receipt of written approval by the City Manager or his/her designee. Such change may only be made to Tasks or Sub-Task as defined in the Scope of Work. Under no circumstance shall such change affect the:

i. Deliverable requirements, as outlined in the Scope of Work;
ii. Due date of any Deliverable, as outlined in the Scope of Work;
iii. Compensation of any Deliverable, as outlined in the Scope of Work;
iv. Contract compensation, as outlined in Article 2; or
v. Contract termination, as outlined in Article 4.

B. Change Request Process. In the event that circumstances warrant a change to accomplish the Scope of Work as described above, a Change Request shall be submitted that meets the following criteria:

i. The Project Manager shall draft a written Change Request for review and approval by the City Manager to include:
   (a) the name of the person requesting the change;
   (b) a summary of the required change;
   (c) the start date for the change;
   (d) the reason and necessity for change;
   (e) the elements to be altered; and
   (f) the impact of the change.

ii. The City Manager shall provide a written decision on the Change Request to the Contractor within a maximum of ten (10) Business Days of receipt of the Change Request. All decisions made by the City Manager are final. Change Requests, once approved, become a part of the Contract, and become binding as a part of the original Contract.

16. Merger

This Contract incorporates all the agreements, covenants, and understandings between the parties hereto concerning the subject matter hereof, and all such covenants, agreements and understandings have been merged into this written contract.

All terms and conditions of **ITB No. 25163** and the Contractor's response to such document(s) are incorporated herein by reference and included in the order of precedence.

No prior Agreement or understanding, oral or otherwise, of the parties or their agents shall be valid or enforceable unless embodied in this Contract.

17. Penalties for Violation of Law

NMSA 1978, Sections 13-1-28 through 13-1-199, imposes civil and criminal penalties for its violation. In addition, the New Mexico criminal statutes impose felony penalties for illegal bribes, gratuities and kickbacks.

18. Equal Opportunity Compliance

The Contractor agrees to abide by all federal and state laws and rules and regulations, and Santa Fe City Code, pertaining to equal employment opportunity. In accordance with all such laws of the State of New Mexico, the Contractor assures that no person in the United States shall, on the grounds of race, religion, color, national origin, ancestry, sex, age, physical or mental handicap, or serious medical condition, spousal affiliation, sexual orientation or gender identity, be excluded from employment with or participation in, be denied the benefits of, or be otherwise subjected to discrimination under any program or activity performed under this Contract. If Contractor is found not to be in compliance with these requirements during the life of this Contract, Contractor agrees to take appropriate steps to correct these deficiencies.

19. Applicable Law

The laws of the State of New Mexico shall govern this Contract, without giving effect to its choice of law provisions. Venue shall be proper only in a New Mexico court of competent jurisdiction in accordance with NMSA 1978, Section 38-3-2. By execution of this Contract, Contractor acknowledges and agrees to the jurisdiction of the courts of the State of New Mexico over any and all lawsuits arising under or out of any term of this Contract.

20. Workers' Compensation

The Contractor agrees to comply with state laws and rules applicable to workers compensation benefits for its employees. If the Contractor fails to comply with the Workers Compensation Act and applicable rules when required to do so, this Contract may be terminated by the City.

21. Other Insurance

If the services contemplated under this Contract will be performed on or in City facilities or property, Contractor shall maintain in force during the entire term of this Contract, the following insurance coverage(s), naming the City as additional insured.

A. **Commercial General Liability** insurance shall be written on an occurrence basis and be a broad as ISO Form CG 00 01 with limits not less than $2,000,000 per occurrence and $2,000,000 in the aggregate for claims against bodily injury, personal and advertising injury, and property damage. Said policy shall include broad form Contractual Liability coverage and be endorsed to name the City of Santa Fe their officials, officers, employees, and agents as additional insureds.

B. **Business Automobile Liability** insurance for all owned, non-owned automobiles, with a combined single limit not less than $1,000,000 per accident.

C. **Broader Coverage and Limits**. The insurance requirements under this Contract shall be the greater of (1) the minimum coverage and limits specified in this Contract, or (2) the broader coverage and maximum limits of coverage of any insurance policy or proceeds available to the Named Insured. It is agreed that these insurance requirements shall not in any way act to reduce coverage that is broader or that includes higher limits than the minimums required herein. No

representation is made that the minimum insurance requirements of this Contract are sufficient to cover the obligations of Contractor hereunder.

D. Contractor shall maintain the above insurance for the term of this Contract and name the City as an additional insured and provide for 30 days cancellation notice on any Certificate of Insurance form furnished by Contractor. Such certificate shall also specifically state the coverage provided under the policy is primary over any other valid and collectible insurance and provide a waiver of subrogation.

22. Records and Financial Audit

The Contractor shall maintain detailed time and expenditure records that indicate the date; time, nature and cost of services rendered during the Contract's term and effect and retain them for a period of three (3) years from the date of final payment under this Contract. The records shall be subject to inspection by the City. The City shall have the right to audit billings both before and after payment. Payment under this Contract shall not foreclose the right of the City to recover excessive or illegal payments

23. Indemnification

The Contractor shall indemnify, hold harmless, or insure the City, including its officers, employees or agents, against liability, claims, damages, losses or expenses, including attorney fees, only to the extent that the liability, damages, losses or costs are caused by, or arise out of, the acts or omissions of the indemnitor or its officers, employees or agents. In the event that any action, suit or proceeding related to the services performed by the Contractor or any officer, agent, employee, servant or subcontractor under this Contract is brought against the Contractor, the Contractor shall, as soon as practicable but no later than two (2) business days after it receives notice thereof, notify the legal counsel of the City.

24. New Mexico Tort Claims Act

Any liability incurred by the City of Santa Fe in connection with this Contract is subject to the immunities and limitations of the New Mexico Tort Claims Act, NMSA 1978, Section 41-4-1, et. seq., as amended. The City and its "public employees" as defined in the New Mexico Tort Claims Act, do not waive sovereign immunity, do not waive any defense and do not waive any limitation of liability pursuant to law. No provision in this Contract modifies or waives any provision of the New Mexico Tort Claims Act.

25. Invalid Term or Condition

If any term or condition of this Contract shall be held invalid or unenforceable, the remainder of this Contract shall not be affected and shall be valid and enforceable.

26. Enforcement of Contract

A party's failure to require strict performance of any provision of this Contract shall not waive or diminish that party's right thereafter to demand strict compliance with that or any other provision. No waiver by a party of any of its rights under this Contract shall be effective unless express and in writing,

and no effective waiver by a party of any of its rights shall be effective to waive any other rights.

27. Notices

Any notice required to be given to either party by this Contract shall be in writing and shall be delivered in person, by courier service or by U.S. mail, either first class or certified, return receipt requested, postage prepaid, as follows:

To the City:	**To the Contractor:**
Chief Procurement Officer purchasing@santafenm.gov PO Box 909 Santa Fe, NM 87504-0909 Caryn Grosse, PMP Project Manager III City of Santa Fe Public Works 2651 Siringo Road, Building E Santa Fe, NM 87505-5229 clgrosse@santafenm.gov (505) 955-5938	Jenny Ramirez Project Manager LLR Construction 2015 Wyoming Blvd NE, Ste I Albuquerque, NM 87112 jenny@llrcon.com (505) 629-5275

28. Authority

If Contractor is other than a natural person, the individual(s) signing this Contract on behalf of Contractor represents and warrants that he or she has the power and authority to bind Contractor, and that no further action, resolution, or approval from Contractor is necessary to enter into a binding contract.

29. Progress Payments

Based upon Application for Payment submitted to the City by the Contractor and Certificates for Payment issued by the City, the City shall make progress payments on account of the Contract sum to the Contractor as provided in the Contract documents for the period ending the last day of the month as follows:

Not later than twenty-one (21) days following the end of the period covered by the Application for Payment, one hundred percent (100%) of the portion of the Contract Sum properly allocable to labor, materials, and equipment incorporated in the work and one hundred percent (100%) of the portion of the Contract sum properly allocable to materials and equipment suitably stored at the site or some other location agreed upon in writing for the period covered by the Application for Payment, less the aggregate of previous payments made by the City; and upon substantial completion of the entire work, a sum sufficient to increase the total payments to one hundred percent (100%) of the Contract sum, less such amounts as the City shall determine for all incomplete work and unsettled claims as provided in the Contract documents.

30. Final Payment

Final payment, constituting the entire unpaid balance of the Contract sum, unless it is a disputed payment, shall be paid by the City to the Contractor within twenty-one (21) calendar days, after all deficiencies to the Contract document that were noted during the Substantial Completion Inspection and listed on the attachment to the Certificate of Substantial Completion have been corrected, and provided the Contract has been fully performed and a final Certificate for Payment has been issued by the City. In addition, the Contractor shall provide to the City a certified statement of Release of Lien (AIA Document G706A or approved form), Consent of Surety, Warranty from Prime Contractor, Warranties from Suppliers and Manufacturers, training sessions, equipment/operating manuals, and as-built drawings.

31. Schedule

The Contractor shall, within five (5) days after the effective date of Notice to Proceed, prepare and submit a progress schedule covering project operations for the 30-day Contract period. This progress schedule shall be of the type generally referred to as a Critical Path Method (CPM), Critical Path Schedule (CPS), and Critical Path Analysis (CPA), and other similar designations. The CPM shall be used to control the timing and sequences of the project. All work shall be done in accordance with the CPM Planning and Scheduling. A written statement of explanation shall be submitted with the progress schedule. All costs incurred by the contractor to implement the CPM shall be borne by the Contractor and are part of their Contract.

32. General and Special Provisions

A. Terms used in this Contract which are defined in the Conditions of the Contract shall have the meanings designated in those Conditions.

B. An enumeration of the Contractor's General Comprehensive Liability Insurance requirements.

C. Appears in the General Conditions of the Contract for construction. Insurance requirements are also described in the Instructions to the Bidder section of the Project Manual. Contractor shall maintain adequate insurance in at least the maximum amounts, which the City could be liable under the New Mexico Tort Claims Act and shall provide proof of such insurance coverage to the City. It is the sole responsibility of the Contractor to comply with the law.

D. This Contract shall not become effective until: (1) approved by the Governing Body; and (2) signed by all parties required to sign this Contract.

E. The Contractor shall maintain detailed time records which indicate the date, time and nature of services rendered. These records shall be subject to inspection by the City, the Department of Finance and Administration and the State Auditor. The City shall have the right to audit billings both before and after payment. Payment under this Contract shall not foreclose the right of the City to recover excessive illegal payments.

F. The Contractor warrants that the Contractor presently has no interest and shall not acquire any interest, direct or indirect, which would conflict in any manner or degree with the performance or services required under this Contract.

G. The Contractor hereby warrants that the Contractor complies with the Americans with Disabilities Act, 29 CFR 1630.

H. Gender, Singular/Plural. Words of any gender used in this Contract shall be held and construed to include any other gender, and words in the singular number shall be held to include the plural, unless the context otherwise requires.

I. Captions and Section Headings. The captions and section headings contained in this Contract are for convenience of reference only, and in no way limit, define, or enlarge the terms, scope, and conditions of this Contract.

J. Certificates and Documents Incorporated. All certificates and documentation required by the provisions of the Contract shall be attached to this Contract at the time of execution and are hereby incorporated by reference as though set forth in full in this Contract to the extent they are consistent with its conditions and terms.

K. Separability. If any clause or provision of this Contract is illegal, invalid or unenforceable under present or future laws effective during the term of this Contract, then and in that event, it is the intention of the parties hereto that the remainder of this Contract shall not be affected thereby.

L. Words and Phrases. Words, phrases, and abbreviations, which have well-known technical or trade meanings used in the Contract documents shall be used according to such recognized meaning. In the event of a conflict, the more stringent meaning shall govern.

M. Relationship of Contract Documents. The Contract Documents are complementary, and any requirement of one Contract Document shall be as binding as if required by all.

N. Pursuant to NMSA 1978, Section 13-1-191, reference is hereby made to the Criminal Laws of New Mexico (including NMSA 1978, Sections 30-14-1, 30-24-2, and 30-41-1 through 30-41-3) which prohibit bribes, kickbacks, and gratuities, violation of which constitutes a felony. Further, the Procurement Code (NMSA 1978, Sections 13-1-28 through 13-1-199) imposes civil and criminal penalties for its violation.

O. Pursuant to NMSA 1978, Section 13-4-11. Reference is hereby made to the Minimum Wage on Public Works; weekly payments; posting wage scale; withholding funds.

IN WITNESS WHEREOF, the Parties have executed this Contract as of the date of the signature by the required approval authorities below.

CITY OF SANTA FE:

_____
ALAN WEBBER, MAYOR

DATE: _____

CONTRACTOR:
LLR Construction

_____
DAVID LANGLEY, MANAGING MEMBER

DATE: Nov 25, 2025

NMBTIN: 03-099698-008

ATTEST:

_____
ANDREA SALAZAR, CITY CLERK

Approved to form and legal sufficiency by:

Kevin L. Nault
Kevin L. Nault (Dec 2, 2025 15:41:23 MST)
ASSISTANT CITY ATTORNEY

APPROVED FOR FINANCES:

Emily K. Oster
EMILY OSTER, FINANCE DIRECTOR

Exhibit A

Bidder Instructions:

Items - Bidders do not have the ability to add or delete items.

Approx. Qty. - Quantities provides are estimates, only, and do not establish a definite quantity contract. Actual quantities purchased under a resulting
UOM (Unit of Measure) - Bidders do not have the ability to change the UOM. Any variation from the UOM identified may be provided in the Comments.
Article and Description - Bidder cannot change Article and Description. Any clarification, explanation, brand name identification, etc. must be provided
Unit Price - Bidders must provide pricing that conforms with the identified Unit Price.
Comments - Bidders may only provide comments to explain or clarify an item, identify a brand name, or provide information as specifically stated in the

Item	Approx. Qty.	UOM	Article and Description	Unit Price	Comments
			Wage Rates for Projects Under $60,000.00		
1	1	HR - Hour	Superintendent - Regular Hourly Rate	$ 87.85	
2	1	HR - Hour	Superintendent - Overtime Hourly Rate	$ 132.00	
3	1	HR - Hour	Journeyman or Experienced Worker - Regular Hourly Rate	$ 70.00	
4	1	HR - Hour	Journeyman or Experienced Worker - Overtime Hourly Rate	$ 105.00	
5	1	HR - Hour	Laborer - Regular Hourly Rate	$ 46.00	
6	1	HR - Hour	Laborer - Overtime Hourly Rate	$ 69.00	
			Wage Rates for Projects Over $60,000.00		
7	1	HR - Hour	Superintendent - Regular Hourly Rate	$ 123.75	
8	1	HR - Hour	Superintendent - Overtime Hourly Rate	$ 186.00	
9	1	HR - Hour	Journeyman or Experienced Worker - Regular Hourly Rate	$ 78.50	
10	1	HR - Hour	Journeyman or Experienced Worker - Overtime Hourly Rate	$ 118.00	
11	1	HR - Hour	Laborer - Regular Hourly Rate	$ 52.50	
12	1	HR - Hour	Laborer - Overtime Hourly Rate	$ 78.75	
13	1	Daily	Temporary Site Office Trailer, rental rate	$ 12.00	
14	1	Daily	Temporary Fencing, rental rate	$ 1.10	Rental rate measured by linear feet per daily rental
15	1	Daily	Sanitary/toilet Facilities, rental rate	$ 5.60	
16		Percent	Discount off all materials. Enter zero if no discount is offered.	0%	

On-Call Construction ITB 25163_LLR Construction

Final Audit Report 2025-12-02

Created:	2025-11-25
By:	MATTHEW HARDING (mrharding@santafenm.gov)
Status:	Signed
Transaction ID:	CBJCHBCAABAAG1uwmf4Gfh5v8hYr0IYYzCTdPSNEZQyn

"On-Call Construction ITB 25163_LLR Construction" History

Document created by MATTHEW HARDING (mrharding@santafenm.gov)
2025-11-25 - 9:31:20 PM GMT- IP address: 63.232.20.2

Document emailed to David Langley (david@llrcon.com) for signature
2025-11-25 - 9:31:54 PM GMT

Email viewed by David Langley (david@llrcon.com)
2025-11-25 - 9:47:11 PM GMT- IP address: 194.242.49.92

Document e-signed by David Langley (david@llrcon.com)
Signature Date: 2025-11-25 - 9:58:22 PM GMT - Time Source: server- IP address: 194.242.49.92

Document emailed to Kevin Nault (klnault@santafenm.gov) for signature
2025-11-25 - 9:58:24 PM GMT

Email viewed by Kevin Nault (klnault@santafenm.gov)
2025-11-29 - 10:00:49 PM GMT- IP address: 62.10.205.18

Email viewed by Kevin Nault (klnault@santafenm.gov)
2025-12-02 - 10:40:56 PM GMT- IP address: 172.59.2.22

Signer Kevin Nault (klnault@santafenm.gov) entered name at signing as Kevin L. Nault
2025-12-02 - 10:41:21 PM GMT- IP address: 172.59.2.22

Document e-signed by Kevin L. Nault (klnault@santafenm.gov)
Signature Date: 2025-12-02 - 10:41:23 PM GMT - Time Source: server- IP address: 172.59.2.22

Agreement completed.
2025-12-02 - 10:41:23 PM GMT

Powered by Adobe Acrobat Sign

CERTIFICATE OF LIABILITY INSURANCE

DATE (MM/DD/YYYY): 01/06/2025

THIS CERTIFICATE IS ISSUED AS A MATTER OF INFORMATION ONLY AND CONFERS NO RIGHTS UPON THE CERTIFICATE HOLDER. THIS CERTIFICATE DOES NOT AFFIRMATIVELY OR NEGATIVELY AMEND, EXTEND OR ALTER THE COVERAGE AFFORDED BY THE POLICIES BELOW. THIS CERTIFICATE OF INSURANCE DOES NOT CONSTITUTE A CONTRACT BETWEEN THE ISSUING INSURER(S), AUTHORIZED REPRESENTATIVE OR PRODUCER, AND THE CERTIFICATE HOLDER.

IMPORTANT: If the certificate holder is an ADDITIONAL INSURED, the policy(ies) must have ADDITIONAL INSURED provisions or be endorsed. If SUBROGATION IS WAIVED, subject to the terms and conditions of the policy, certain policies may require an endorsement. A statement on this certificate does not confer rights to the certificate holder in lieu of such endorsement(s).

PRODUCER
Poms & Associates Insurance Brokers
201 3rd Street NW, Suite 1400
Albuquerque NM 87102

CONTACT NAME: Ava Bizzell
PHONE (A/C, No, Ext): (800) 898-6236 **FAX (A/C, No):** (505) 797-1432
E-MAIL ADDRESS: abizzell@pomsassoc.com

INSURER(S) AFFORDING COVERAGE	NAIC #
INSURER A : Mountain States Indemnity Company	10177
INSURER B : Donegal Mutual Insurance Company	13692
INSURER C : Builder's Trust of New Mexico	
INSURER D :	
INSURER E :	
INSURER F :	

INSURED
LLR Construction, LLC
2015 Wyoming Blvd. NE, Ste. I
Albuquerque NM 87112

COVERAGES **CERTIFICATE NUMBER:** 25-26 MASTER **REVISION NUMBER:**

THIS IS TO CERTIFY THAT THE POLICIES OF INSURANCE LISTED BELOW HAVE BEEN ISSUED TO THE INSURED NAMED ABOVE FOR THE POLICY PERIOD INDICATED. NOTWITHSTANDING ANY REQUIREMENT, TERM OR CONDITION OF ANY CONTRACT OR OTHER DOCUMENT WITH RESPECT TO WHICH THIS CERTIFICATE MAY BE ISSUED OR MAY PERTAIN, THE INSURANCE AFFORDED BY THE POLICIES DESCRIBED HEREIN IS SUBJECT TO ALL THE TERMS, EXCLUSIONS AND CONDITIONS OF SUCH POLICIES. LIMITS SHOWN MAY HAVE BEEN REDUCED BY PAID CLAIMS.

INSR LTR	TYPE OF INSURANCE	ADDL INSD	SUBR WVD	POLICY NUMBER	POLICY EFF (MM/DD/YYYY)	POLICY EXP (MM/DD/YYYY)	LIMITS	
A	[X] COMMERCIAL GENERAL LIABILITY [ ] CLAIMS-MADE [X] OCCUR GEN'L AGGREGATE LIMIT APPLIES PER: [X] POLICY [ ] PRO-JECT [ ] LOC [ ] OTHER:			CPO9031665	01/01/2025	01/01/2026	EACH OCCURRENCE DAMAGE TO RENTED PREMISES (Ea occurrence) MED EXP (Any one person) PERSONAL & ADV INJURY GENERAL AGGREGATE PRODUCTS - COMP/OP AGG	$ 1,000,000 $ 100,000 $ 5,000 $ 1,000,000 $ 2,000,000 $ 2,000,000
A	AUTOMOBILE LIABILITY [X] ANY AUTO [ ] OWNED AUTOS ONLY [ ] SCHEDULED AUTOS [ ] HIRED AUTOS ONLY [ ] NON-OWNED AUTOS ONLY			1000111571	01/01/2025	01/01/2026	COMBINED SINGLE LIMIT (Ea accident) BODILY INJURY (Per person) BODILY INJURY (Per accident) PROPERTY DAMAGE (Per accident)	$ 1,000,000 $ $ $
B	[ ] UMBRELLA LIAB [X] OCCUR [X] EXCESS LIAB [ ] CLAIMS-MADE [ ] DED [X] RETENTION $ 0			CXO9031665	01/01/2025	01/01/2026	EACH OCCURRENCE AGGREGATE	$ 3,000,000 $ 3,000,000
C	WORKERS COMPENSATION AND EMPLOYERS' LIABILITY ANY PROPRIETOR/PARTNER/EXECUTIVE OFFICER/MEMBER EXCLUDED? (Mandatory in NH) Y/N: N If yes, describe under DESCRIPTION OF OPERATIONS below	N / A		WC100-0006044-2025A	01/01/2025	01/01/2026	[X] PER STATUTE [ ] OTH-ER E.L. EACH ACCIDENT E.L. DISEASE - EA EMPLOYEE E.L. DISEASE - POLICY LIMIT	 $ 2,000,000 $ 2,000,000 $ 2,000,000
A	Leased/Rented Equipment			CPO9031665	01/01/2025	01/01/2026	Limit Deductible	$150,000 $500

DESCRIPTION OF OPERATIONS / LOCATIONS / VEHICLES (ACORD 101, Additional Remarks Schedule, may be attached if more space is required)

CERTIFICATE HOLDER
City of Santa Fe/Public Works Department
737 Agua Fria
Santa Fe NM 87501

CANCELLATION
SHOULD ANY OF THE ABOVE DESCRIBED POLICIES BE CANCELLED BEFORE THE EXPIRATION DATE THEREOF, NOTICE WILL BE DELIVERED IN ACCORDANCE WITH THE POLICY PROVISIONS.

AUTHORIZED REPRESENTATIVE

© 1988-2015 ACORD CORPORATION. All rights reserved.

From: DUTTON-LEYDA, TRAVIS K.
To: KAHAHANE, ELIZABETH L.
Cc: Purchasing DET
Subject: Re: Determination Request – Miscellaneous General Contracting work for the City of Santa Fe
Date: Wednesday, August 20, 2025 9:05:00 AM
Attachments: image001.png

Hi, this is construction.

Thank you.

Regards,

Travis Dutton-Leyda
Chief Procurement Officer
City of Santa Fe
200 Lincoln Avenue
Santa Fe, NM 87501
505-629-8351
tkduttonleyda@santafenm.gov

https://santafenm.gov/finance-2/purchasing-1

CITY OF SANTA FE | FACILITIES

Vision without action is merely a dream.
Action without vision passes the time.
Vision with action can change the world. ~ Joel A. Barker

> On Aug 20, 2025, at 8:56 AM, KAHAHANE, ELIZABETH L. <elkahahane@santafenm.gov> wrote:
>
> Aloha Purchasing!
>
> Facilities Division is requesting a SOW determination for the following:
>
> > The Contractor shall perform the following work in accordance with their Bid Pricing, attached hereto and made a part thereof, as Exhibit A:
> > 1. This work shall include Miscellaneous General Contracting work for the City

of Santa Fe.

2. The Contractor shall be required to provide On-Call General Contracting Services for any number of the activities listed under this Scope of Work upon the request of the City. Once a need is identified, the City will issue a written Task Order to the Contractor detailing the services required. Upon receiving the City's request for services, the Contractor shall promptly provide the City with an estimate (based upon the rates submitted in the Bid Form), cost summary, and project schedule required to complete the assignment or task. Project schedules, negotiated price, and completion dates shall be determined on a project-by-project basis and dependent upon the urgency of that task. The Contractor may be required to do some of the work in phases. The Contractor shall be required to provide the requested labor and all equipment and materials within one week of a request issuance of a Notice to Proceed unless otherwise arranged. The Contractor shall agree to provide required labor within 24 hours for emergency situations whenever possible.

3. The City of Santa Fe Public Works Facilities Division shall be able to utilize this On-Call Contract as needed and as funding is available. All other City of Santa Fe staff will only be authorized to utilize this On-Call Contract with prior, written approval of the scope of work, from the Facilities Division Director, before commencing any work applicable to this On-Call Contract.

4. Contractor is responsible for all required permits and licenses required to perform this work. Contractor shall be responsible for adherence to the Contract Documents, Construction Documents, Specifications, and approved directives.

5. Contractor shall be responsible for any applicable Local, County, State and Federal requirements and permits.

6. Contractor shall be responsible for verifications of all existing conditions, measurements, and dimensions for bidding. Contractor shall be responsible for all permits, fees, and State and/or City inspections associated with their work.

Please let me know if additional information is required.
Thank you!

Best,
Elizabeth "Lisa" Kahahane, CPO
Contract Administrator | Facilities Division | Public Works Dept.
Email: elkahahane@santafenm.gov
M: (505) 795-2439
O: (505) 955-5934

CITY OF SANTA FE
FACILITIES

This e-mail and any attachments may contain confidential information and/or

information protected by intellectual property rights for the exclusive attention of the intended addressees. If you have received this transmission in error, please immediately notify the sender by return e-mail and delete this message and its attachments. Unauthorized use, copying or further full or partial distribution of this e-mail or its contents is prohibited.

Services Offered to the City of Santa Fe (FY26)

Approved:
These services have been approved by the New Mexico Council for Purchasing from Persons with Disabilities and are available through Horizons of New Mexico.

- ADA Accessibility Consulting Services
- Auctioneering Services
- Bulk Mailing and Sorting
- Call Center Services
- Computer Refurbishing
- Courier Services
- Decontamination, Sanitation and Sterilization Services
- Debris Removal
- Document Imaging
- Document Shredding
- Envelope Stuffing
- General Labor
- Hard Drive Destruction
- Janitorial and Housekeeping Services – Including Carpet Cleaning & Floor Care
- Landscape Irrigation
- Landscaping
- Mailing Services
- Management of an Assistive Technology Reuse and Recycling Program
- Medical Waste Disposal
- Meeting Minute Preparation Services
- Pest Control and Extermination Services
- Printing Services
- Rest Area Maintenance
- Screen Printing
- Snow Removal
- Temporary Staffing Services
- Yard, Grounds, and Lawn Maintenance

Permissive:
The services have been approved by the New Mexico Council for Purchasing from Persons with Disabilities as permissible for sale under the State Use Act through Horizons of New Mexico. While the Council recognizes that certain Horizons of New Mexico members are capable of performing the services listed below, said services are considered permissive and excluded from the mandatory aspect of the State Use Program. Any procurement of the below services through Horizons of New Mexico is at the discretion of the purchasing agent and will be considered by the Council on a case-by-case basis.

- Graphic Design
- Graphic Design - Logo Design
- IT – Enterprise Application
- IT – IV & V
- IT Network and Database Management
- IT Support
- IT Security Services
- IT – Web Design
- IT – Web Programmer
- Marketing
- Social Media Marketing

For the complete State Use service list, please go to: http://horizonsofnewmexico.org/services.html

GB Packet_LLR Construction_On-Call GC ITB 25163

Final Audit Report 2025-12-08

Created:	2025-12-05
By:	Elizabeth Kahahane (elkahahane@santafenm.gov)
Status:	Signed
Transaction ID:	CBJCHBCAABAA4PkrZkcp1T-x9Kc5g-auAZskvGPIxMir

"GB Packet_LLR Construction_On-Call GC ITB 25163" History

Document created by Elizabeth Kahahane (elkahahane@santafenm.gov)
2025-12-05 - 6:39:16 PM GMT- IP address: 63.232.20.2

Document emailed to CARYN GROSSE (clgrosse@santafenm.gov) for signature
2025-12-05 - 6:41:24 PM GMT

Email viewed by CARYN GROSSE (clgrosse@santafenm.gov)
2025-12-05 - 6:41:31 PM GMT- IP address: 62.10.205.21

Document e-signed by CARYN GROSSE (clgrosse@santafenm.gov)
Signature Date: 2025-12-05 - 6:48:21 PM GMT - Time Source: server- IP address: 63.232.20.2

Document emailed to Timothy Farrell (tgfarrell@santafenm.gov) for signature
2025-12-05 - 6:48:23 PM GMT

Email viewed by Timothy Farrell (tgfarrell@santafenm.gov)
2025-12-05 - 6:56:57 PM GMT- IP address: 104.47.65.254

Document e-signed by Timothy Farrell (tgfarrell@santafenm.gov)
Signature Date: 2025-12-05 - 6:57:17 PM GMT - Time Source: server- IP address: 174.56.2.34

Document emailed to JOHN BURNETT (jsburnett@santafenm.gov) for signature
2025-12-05 - 6:57:19 PM GMT

Email viewed by JOHN BURNETT (jsburnett@santafenm.gov)
2025-12-08 - 2:50:57 PM GMT- IP address: 71.228.98.124

Document e-signed by JOHN BURNETT (jsburnett@santafenm.gov)
Signature Date: 2025-12-08 - 2:51:22 PM GMT - Time Source: server- IP address: 71.228.98.124

Powered by Adobe Acrobat Sign

Agreement completed.

2025-12-08 - 2:51:22 PM GMT

Powered by
Adobe
Acrobat Sign

CITY OF SANTA FE

Date: December 3, 2025

To: Governing Body

From: Caryn Grosse, PMP, Public Works Project Manager III

Via: Sam Burnett, Interim Public Works Department Director
JOHN BURNETT (Dec 8, 2025 07:50:53 MST)
Tim Farrell, Interim Facilities Division Director

Subject: On-Call Price Agreement for City-Wide Miscellaneous Construction Services

Vendor Name: Unified Contractor, Inc.

Vendor Number: 11053

ACTION:
Request for Approval of an On-Call Price Agreement with Unified Contractor, Inc.in the Total Amount of $10,000,000 Including NMGRT for City-Wide Miscellaneous Construction Services for a Term of 10 Years. (Caryn Grosse, Public Works Project Manager III, clgrosse@santafenm.gov)

CONTRACT NUMBER:
The FY26 Munis Contract Number is 3260212.

BACKGROUND AND SUMMARY:
The Public Works Department Facilities Division uses on-call services to augment the skills, licensure, and capacity of staff to address facility issues and emergencies in a timely, safe, and compliant manner. The Facilities Division typically maintains on-call contracts for general contracting, mechanical, electrical, plumbing, roofing, remediation, and landscaping services.

In accordance with the Invitation to Bid (ITB No. 25163) for On-Call City-Wide Miscellaneous Construction Services, multiple responsive vendors were selected for contracts based on lowest bidder and performance criteria: AnchorBuilt Inc., B&D Industries Inc., Davenport Construction Management LLC, Enviroworks LLC, JDR & Associates, LLR Construction LLC, and Unified Contractor, Inc. This is the City's first construction contract with Unified Contractor, Inc.

On-call contracts are not a guarantee of payment. These contracts are only used, and purchase orders issued, as needs arise and funding is available. The $10,000,000 (including 8.1875% NMGRT) maximum for this contract is based on the historical and anticipated needs across the City over the next ten years.

ATTACHMENTS:
On-Call Price Agreement for Construction Services
Proposal – Exhibit A
Certificate of Insurance
CPO Determination
Horizons Service List

PROCUREMENT METHOD:
The procurement method for this contract is the Invitation to Bid No. 25163, dated April 24, 2025.

Chief Procurement Officer (CPO)/Designee: _____ Date: 12/19/2025
CPO Comment/Exceptions: _____

FUNDING SOURCE:
Funding will be provided on a project-by-project basis.
Fund Name/Number: Various
Munis Org Name/Number: Various
Munis Object Name/Number: Various

Budget Officer/Designee: Andy Hopkins Date: 12/19/2025
Budget Officer Comment/Exceptions: _____

ASSOCIATED APPROVALS:
IT Components included? ☐ Yes | ☒ No
Approval: _____ Title: _____ Date: _____
Comment/Exceptions: _____

Treasury/Point of Sale Components included? ☐ Yes | ☒ No
Approval: _____ Title: _____ Date: _____
Comment/Exceptions: _____

Vehicles included? ☐ Yes | ☒ No
Approval: _____ Title: _____ Date: _____
Comment/Exceptions: _____

Construction to City Facilities, Furniture, and/or Fixtures, included? ☒ Yes | ☐ No
Approval: _____ Title: _____ Date: _____
Comment/Exceptions: Timothy Farrell

Is this an externally funded purchase? ☐ Yes | ☒ No
If yes, what is the issuing agency: _____
Approval: _____ Title: _____ Date: _____
Comment/Exceptions: _____

Capital Asset or Project? ☐ Yes | ☒ No
Project Ledger Number _____
Approval: _____ Title: _____ Date: _____
Comment/Exceptions: _____

Item #: _____
Munis Contract #: 3260212
ITB No.: 25163

CITY OF SANTA FE

ON-CALL PRICE AGREEMENT

CONSTRUCTION CONTRACT

City-Wide Miscellaneous Construction Services

THIS CONTRACT is made and entered into by and between the City of Santa Fe, New Mexico, hereinafter referred to as the "City," and **Unified Contractor, Inc .**, hereinafter referred to as the "Contractor," and is effective as of the date set forth below upon which it is executed by the Parties.

RECITALS

WHEREAS, the City, through its Governing Body, is authorized to enter into an On-Call Price Agreement for the project; and

WHEREAS, the City has procured this Contract according to the established State and Local Purchasing procedures for contracts of the type and amount; and

The City and the Contractor hereby agree as follows:

1. Scope of Work

A. The Contractor shall perform the following work in accordance with their Bid Pricing, attached hereto and made a part thereof, as Exhibit A:

1. This work shall include Miscellaneous General Contracting work for the City of Santa Fe.
2. The Contractor shall be required to provide On-Call Miscellaneous Construction Services for any number of the activities listed under this Scope of Work upon the request of the City. Once a need is identified, the City's Engineers, Project Managers, and Project Administrators (collectively "Project Manager") may issue Task Orders for items described herein. The terms and conditions shall be incorporated in each Task Order issued hereunder. Once a need is identified, the Project Manager will issue a written Task Order to the Contractor detailing the services required. Upon receiving the Task Order, the Contractor shall promptly provide the Project Manager with an estimate, based upon the rates included in their ITB, a cost summary, and a proposed schedule required to complete the assignment or task. Project schedules, negotiated price, and completion dates shall be determined on project-by-project basis and dependent upon the urgency of that task. The Contractor may be required to do some of the work in phases. The City's Project Manager

may issue a Notice to Proceed by signing the Notice after the task price and schedule are finalized by the Contractor, subject to the exception in Article 1(A)(3) below. The Contractor shall be required to provide the requested labor and all equipment and materials within one week of a request issuance of a Notice to Proceed unless otherwise arranged. The Contractor shall agree to provide required labor within 24 hours for emergency situations whenever possible. The Contractor shall not perform any work without a Notice to Proceed signed by the Project Manager, and the City shall not pay for any work performed without a signed Notice to Proceed.

3. If a Task Order does not specify which City division is issuing the Task Order, Contractor shall enquire before acting on a Notice to Proceed. For any City division other than the Public Works Facilities Division the Notice to Proceed is effective only if written approval of the scope of work from the Facilities Division Director is attached.

4. Contractor is responsible for all required permits, licenses, and inspections required to perform this work, and shall comply with applicable municipal, county, state, and federal requirements. Contractor shall be responsible for verification of all existing conditions, measurements, dimensions, adherence to the Contract Documents, Construction Documents, Specifications, and approved directives.

B. Distribution:

City:	Contractor:
Caryn Grosse, PMP Project Manager III City of Santa Fe Facilities Division 2651 Siringo Road, Building E Santa Fe, NM 87505-5229	Debbie Tafoya Unified Contractor, Inc. P.O. Box 93984 Albuquerque, NM 87199

C. Price Adjustments:

The awarded vendor shall maintain fixed pricing for each year of this contract, defined as twelve (12) months starting on and including the Effective Date. Pricing may be adjusted no more than once annually to commercially reasonable rates through an amendment to the price list attached as Exhibit A signed by Contractor and the City's Director of Public Works. Amendments to Exhibit A do not alter Contractor's maximum total compensation pursuant to Article 2 (Compensation) below. The Contractor must submit all pricing increase requests in writing to the City of Santa Fe designated department contact, providing evidence that the request is based on demonstrable market changes impacting the cost of products and services. The request must itemize all proposed changes by line item and include supporting documentation deemed acceptable by the City of Santa Fe (such as a letter from a manufacturer indicating price increases, etc.). The City's decision on acceptable documentation in this context shall be final and binding upon all parties to the contract. No price increase shall result in a higher profit margin. Pricing changes will apply to orders entered on or after the effective date of the price change. Price increases will not be retroactive to purchase orders already issued. Orders will be filled at the price indicated in the purchase order issued by the City.

To facilitate prompt consideration, all requests for price increases must include the following information:

i. Contract Item Number

ii. Current Item Price
iii. Proposed New Price
iv. Percentage of Increase
v. Mill/Supplier Notification of price increase indicating percentage of increase and including the reason for the increase.

2. ITB Compensation

A. Payment. The City shall compensate the Contractor based on Task Orders and the itemized amounts specified in Exhibit A. For the services described in the scope of work, the City will pay the Contractor up to, but not to exceed, $10,000,000.00. The applicable gross receipts tax (8.1875%) shall be shown as a separate amount on each billing or request for payment made under the contract, consistent with NMSA 1978, Section 13-1-108.

B. The compensation represents a maximum amount. The Contractor must notify the City when the Services provided under this Contract approach 90% of compensation total. Services rendered beyond the maximum compensation amount will not be reimbursed unless the Contract is amended in writing prior to the provision of such services.

C. Invoicing and Payment Terms Payment will be made upon the City's acceptance of deliverables and receipt of a detailed, certified invoice from the Contractor. Payments will be sent to the Contractor's designated address. The City shall issue payment in accordance with the timelines required by law. Invoices must be submitted no later than fifteen (15) days after the Contract's termination. Late invoices will not be processed or paid.

D. Extended Payment Terms for Grant-Funded Contracts. For grant-funded agreements, the City may issue payment within forty-five (45) days following submission of an undisputed payment request.

3. Term

THIS CONTRACT SHALL NOT BECOME EFFECTIVE UNTIL APPROVED BY THE CITY. This Contract shall terminate ten (10) years from date of final signature unless terminated pursuant to Paragraph 4 (Termination) or Paragraph 5 (Appropriations). A contract for construction services may not exceed ten (10) years, including all extensions and renewals, except as otherwise provided by NMSA 1978, Section 13-1-150 through 13-1-152 or SFCC 1987, Section 11-13.

4. Termination

A. Grounds. The City may terminate this Contract for convenience or cause. For contracts within their authority, the City Manager or their designee is authorized to provide the notice of termination, otherwise such notice of termination shall be provided by the Mayor or their designee as authorized by the Governing Body. The Contractor may only terminate this Contract based upon the City's uncured, material breach of this Contract.

i. Except as otherwise provided in Paragraphs 7.A and 17, the City shall give Contractor written notice of termination at least thirty (30) days prior to the

intended date of termination.

ii. Contractor shall give City written notice of termination at least thirty (30) days prior to the intended date of termination, which notice shall (i) identify all the City's material breaches of this Contract upon which the termination is based and (ii) state what the City must do to cure such material breaches. Contractor's notice of termination shall only be effective (i) if the City does not cure all material breaches within the thirty (30) day notice period or (ii) in the case of material breaches that cannot be cured within thirty (30) days, the City does not, within the thirty (30) day notice period, notify the Contractor of its intent to cure and begin with due diligence to cure the material breach.

iii. Notwithstanding the foregoing, this Contract may be terminated immediately upon written notice to the Contractor (i) if the Contractor becomes unable to perform the services contracted for, as determined by the City; (ii) if, during the term of this Contract, the Contractor is suspended or debarred by the City; or (iii) the Contract is terminated pursuant to Paragraph 5, "Appropriations," of this Contract.

B. Liability. Except as otherwise expressly allowed or provided under this Contract, the City's sole liability upon termination shall be to pay for acceptable work performed prior to the Contractor's receipt or issuance of a notice of termination; provided, however, that a notice of termination shall not nullify or otherwise affect either party's liability for pre-termination defaults under or breaches of this Contract. The Contractor shall submit an invoice for such work within thirty (30) days of receiving or sending the notice of termination. *THIS PROVISION IS NOT EXCLUSIVE AND DOES NOT WAIVE THE CITY'S OTHER LEGAL RIGHTS AND REMEDIES CAUSED BY THE CONTRACTOR'S DEFAULT/BREACH OF THIS CONTRACT.*

5. Appropriations

The terms of this Contract are contingent upon sufficient appropriations and authorization being made by the Governing Body for the performance of this Contract. If sufficient appropriations and authorization are not made by the Governing Body, this Contract shall terminate immediately upon written notice being given by the City to the Contractor. The City's decision as to whether sufficient appropriations are available shall be accepted by the Contractor and shall be final. If the City proposes an amendment to the Contract to unilaterally reduce funding, the Contractor shall have the option to terminate the Contract or to agree to the reduced funding, within thirty (30) days of receipt of the proposed amendment.

6. Status of Contractor

The Contractor and its agents and employees are independent contractors performing construction services for the City and are not employees of the City. The Contractor and its agents and employees shall not accrue leave, retirement, insurance, bonding, use of City vehicles, or any other benefits afforded to employees of the City as a result of this Contract. The Contractor acknowledges that all sums received hereunder are reportable by the Contractor for tax purposes, including without limitation, self-employment and business income tax. The Contractor agrees not to purport to bind the City unless the Contractor has express written authority to do so, and then only within the strict limits of that authority.

7. On-Call Price Agreement Performance and Payment Bond

A. When a Task Order is issued in excess of twenty-five thousand dollars ($25,000), the following bonds or security shall be delivered to the City and shall become binding on the parties upon the execution of the contract. If the Contractor fails to deliver the required performance and payment bonds, the Contractor's bid shall be rejected, its bid security shall be enforced to the extent of actual damages. Award of the Task Order via Notice to Proceed shall be made pursuant to the Procurement Code in the following manner:

i. a performance bond satisfactory to the City, executed by a surety company authorized to do business in this state and said surety to be approved in federal circular 570 as published by the United States treasury department or the state board of finance or the local governing authority, in an amount equal to one hundred percent of the price specified in the contract; and

ii. a payment bond satisfactory to the City, executed by a surety company authorized to do business in this state and said surety to be approved in federal circular 570 as published by the United States treasury department or the state board of finance or the local governing authority, in an amount equal to one hundred percent of the price specified in the contract, for the protection of all persons supplying labor and material to the contractor or its subcontractors for the performance of the work provided for in the contract.

B. A subcontractor shall provide a performance and payment bond on a public works building project if the subcontractor's contract for work to be performed on a project is one hundred twenty-five thousand dollars ($125,000) or more.

8. Assignment

The Contractor shall not assign or transfer any interest in this Contract or assign any claims for money due or to become due under this Contract without the prior written approval of the City.

9. Subcontracting

The Contractor shall not subcontract any portion of the services to be performed under this Contract without the prior written approval of the City. No such subcontract shall relieve the primary Contractor from its obligations and liabilities under this Contract, nor shall any subcontract obligate direct payment from the City.

10. Release

Final payment of the amounts due under this Contract shall operate as a release of the City, its officers and employees from all liabilities, claims and obligations whatsoever arising from or under this Contract.

11. Confidentiality

Any confidential information provided to or developed by the Contractor in the performance of this Contract shall be kept confidential and shall not be made available to any individual or organization by the Contractor without the prior written approval of the City.

12. Product of Service – Copyright

All materials developed or acquired by the Contractor under this Contract shall become the property of the City and shall be delivered to the City no later than the termination date of this Contract. Nothing developed or produced, in whole or in part, by the Contractor under this Contract shall be the subject of an application for copyright or other claim of ownership by or on behalf of the Contractor.

13. Conflict of Interest; Governmental Conduct Act

A. The Contractor represents and warrants that it presently has no interest and, during the term of this Contract, shall not acquire any interest, direct or indirect, which would conflict in any manner or degree with the performance or services required under the Contract.

B. The Contractor further represents and warrants that it has complied with, and, during the term of this Contract, will continue to comply with, and that this Contract complies with all applicable provisions of the Governmental Conduct Act, NMSA 1978, Chapter 10, Article 16.

C. Contractor's representations and warranties in Paragraphs A and B of this Article 12 are material representations of fact upon which the City relied when this Contract was entered into by the parties. Contractor shall provide immediate written notice to the City if, at any time during the term of this Contract, Contractor learns that Contractor's representations and warranties in Paragraphs A and B of this Article 12 were erroneous on the effective date of this Contract or have become erroneous by reason of new or changed circumstances. If it is later determined that Contractor's representations and warranties in Paragraphs A and B of this Article 12 were erroneous on the effective date of this Contract or have become erroneous by reason of new or changed circumstances, in addition to other remedies available to the City and notwithstanding anything in the Contract to the contrary, the City may immediately terminate the Contract.

D. All terms defined in the Governmental Conduct Act have the same meaning in this section.

14. Amendment

A. This Contract shall not be altered, changed or amended except by instrument in writing executed by the parties hereto and all other required signatories.

B. If the City proposes an amendment to the Contract to unilaterally reduce funding due to budget or other considerations, the Contractor shall, within thirty (30) days of receipt of the proposed Amendment, have the option to terminate the Contract, pursuant to the termination provisions as set forth in Article 4 herein, or to agree to the reduced funding.

15. Change Orders

A. Changes. The Contractor may only make changes or revisions within the Scope of Work as defined by Article 1 and/or Exhibit 1 after receipt of written approval by the City Manager or his/her designee. Such change may only be made to Tasks or Sub-Task as defined in the Scope of Work. Under no circumstance shall such change affect the:

i. Deliverable requirements, as outlined in the Scope of Work;
ii. Due date of any Deliverable, as outlined in the Scope of Work;
iii. Compensation of any Deliverable, as outlined in the Scope of Work;
iv. Contract compensation, as outlined in Article 2; or
v. Contract termination, as outlined in Article 4.

B. Change Request Process. In the event that circumstances warrant a change to accomplish the Scope of Work as described above, a Change Request shall be submitted that meets the following criteria:

i. The Project Manager shall draft a written Change Request for review and approval by the City Manager to include:
   (a) the name of the person requesting the change;
   (b) a summary of the required change;
   (c) the start date for the change;
   (d) the reason and necessity for change;
   (e) the elements to be altered; and
   (f) the impact of the change.

ii. The City Manager shall provide a written decision on the Change Request to the Contractor within a maximum of ten (10) Business Days of receipt of the Change Request. All decisions made by the City Manager are final. Change Requests, once approved, become a part of the Contract, and become binding as a part of the original Contract.

16. Merger

This Contract incorporates all the agreements, covenants, and understandings between the parties hereto concerning the subject matter hereof, and all such covenants, agreements and understandings have been merged into this written contract.

All terms and conditions of **ITB No. 25163** and the Contractor's response to such document(s) are incorporated herein by reference and included in the order of precedence.

No prior Agreement or understanding, oral or otherwise, of the parties or their agents shall be valid or enforceable unless embodied in this Contract.

17. Penalties for Violation of Law

NMSA 1978, Sections 13-1-28 through 13-1-199, imposes civil and criminal penalties for its violation. In addition, the New Mexico criminal statutes impose felony penalties for illegal bribes, gratuities and kickbacks.

18. Equal Opportunity Compliance

The Contractor agrees to abide by all federal and state laws and rules and regulations, and Santa Fe City Code, pertaining to equal employment opportunity. In accordance with all such laws of the State of New Mexico, the Contractor assures that no person in the United States shall, on the grounds of race, religion, color, national origin, ancestry, sex, age, physical or mental handicap, or serious medical condition, spousal affiliation, sexual orientation or gender identity, be excluded from employment with or participation in, be denied the benefits of, or be otherwise subjected to discrimination under any program or activity performed under this Contract. If Contractor is found not to be in compliance with these requirements during the life of this Contract, Contractor agrees to take appropriate steps to correct these deficiencies.

19. Applicable Law

The laws of the State of New Mexico shall govern this Contract, without giving effect to its choice of law provisions. Venue shall be proper only in a New Mexico court of competent jurisdiction in accordance with NMSA 1978, Section 38-3-2. By execution of this Contract, Contractor acknowledges and agrees to the jurisdiction of the courts of the State of New Mexico over any and all lawsuits arising under or out of any term of this Contract.

20. Workers' Compensation

The Contractor agrees to comply with state laws and rules applicable to workers compensation benefits for its employees. If the Contractor fails to comply with the Workers Compensation Act and applicable rules when required to do so, this Contract may be terminated by the City.

21. Other Insurance

If the services contemplated under this Contract will be performed on or in City facilities or property, Contractor shall maintain in force during the entire term of this Contract, the following insurance coverage(s), naming the City as additional insured.

A. **Commercial General Liability** insurance shall be written on an occurrence basis and be a broad as ISO Form CG 00 01 with limits not less than $2,000,000 per occurrence and $2,000,000 in the aggregate for claims against bodily injury, personal and advertising injury, and property damage. Said policy shall include broad form Contractual Liability coverage and be endorsed to name the City of Santa Fe their officials, officers, employees, and agents as additional insureds.

B. **Business Automobile Liability** insurance for all owned, non-owned automobiles, with a combined single limit not less than $1,000,000 per accident.

C. **Broader Coverage and Limits**. The insurance requirements under this Contract shall be the greater of (1) the minimum coverage and limits specified in this Contract, or (2) the broader coverage and maximum limits of coverage of any insurance policy or proceeds available to the Named Insured. It is agreed that these insurance requirements shall not in any way act to reduce coverage that is broader or that includes higher limits than the minimums required herein. No

representation is made that the minimum insurance requirements of this Contract are sufficient to cover the obligations of Contractor hereunder.

D. Contractor shall maintain the above insurance for the term of this Contract and name the City as an additional insured and provide for 30 days cancellation notice on any Certificate of Insurance form furnished by Contractor. Such certificate shall also specifically state the coverage provided under the policy is primary over any other valid and collectible insurance and provide a waiver of subrogation.

22. Records and Financial Audit

The Contractor shall maintain detailed time and expenditure records that indicate the date; time, nature and cost of services rendered during the Contract's term and effect and retain them for a period of three (3) years from the date of final payment under this Contract. The records shall be subject to inspection by the City. The City shall have the right to audit billings both before and after payment. Payment under this Contract shall not foreclose the right of the City to recover excessive or illegal payments

23. Indemnification

The Contractor shall indemnify, hold harmless, or insure the City, including its officers, employees or agents, against liability, claims, damages, losses or expenses, including attorney fees, only to the extent that the liability, damages, losses or costs are caused by, or arise out of, the acts or omissions of the indemnitor or its officers, employees or agents. In the event that any action, suit or proceeding related to the services performed by the Contractor or any officer, agent, employee, servant or subcontractor under this Contract is brought against the Contractor, the Contractor shall, as soon as practicable but no later than two (2) business days after it receives notice thereof, notify the legal counsel of the City.

24. New Mexico Tort Claims Act

Any liability incurred by the City of Santa Fe in connection with this Contract is subject to the immunities and limitations of the New Mexico Tort Claims Act, NMSA 1978, Section 41-4-1, et. seq., as amended. The City and its "public employees" as defined in the New Mexico Tort Claims Act, do not waive sovereign immunity, do not waive any defense and do not waive any limitation of liability pursuant to law. No provision in this Contract modifies or waives any provision of the New Mexico Tort Claims Act.

25. Invalid Term or Condition

If any term or condition of this Contract shall be held invalid or unenforceable, the remainder of this Contract shall not be affected and shall be valid and enforceable.

26. Enforcement of Contract

A party's failure to require strict performance of any provision of this Contract shall not waive or diminish that party's right thereafter to demand strict compliance with that or any other provision. No waiver by a party of any of its rights under this Contract shall be effective unless express and in writing,

and no effective waiver by a party of any of its rights shall be effective to waive any other rights.

27. Notices

Any notice required to be given to either party by this Contract shall be in writing and shall be delivered in person, by courier service or by U.S. mail, either first class or certified, return receipt requested, postage prepaid, as follows:

To the City:	**To the Contractor:**
Chief Procurement Officer purchasing@santafenm.gov PO Box 909 Santa Fe, NM 87504-0909 Caryn Grosse, PMP Project Manager III City of Santa Fe Public Works 2651 Siringo Road, Building E Santa Fe, NM 87505-5229 clgrosse@santafenm.gov (505) 955-5938	Debbie Tafoya Unified Contractor, Inc. P.O. Box 93984 Albuquerque, NM 87199 debbie@unifiedcontractor.com (505) 352-5275

28. Authority

If Contractor is other than a natural person, the individual(s) signing this Contract on behalf of Contractor represents and warrants that he or she has the power and authority to bind Contractor, and that no further action, resolution, or approval from Contractor is necessary to enter into a binding contract.

29. Progress Payments

Based upon Application for Payment submitted to the City by the Contractor and Certificates for Payment issued by the City, the City shall make progress payments on account of the Contract sum to the Contractor as provided in the Contract documents for the period ending the last day of the month as follows:

Not later than twenty-one (21) days following the end of the period covered by the Application for Payment, one hundred percent (100%) of the portion of the Contract Sum properly allocable to labor, materials, and equipment incorporated in the work and one hundred percent (100%) of the portion of the Contract sum properly allocable to materials and equipment suitably stored at the site or some other location agreed upon in writing for the period covered by the Application for Payment, less the aggregate of previous payments made by the City; and upon substantial completion of the entire work, a sum sufficient to increase the total payments to one hundred percent (100%) of the Contract sum, less such amounts as the City shall determine for all incomplete work and unsettled claims as provided in the Contract documents.

30. Final Payment

Final payment, constituting the entire unpaid balance of the Contract sum, unless it is a disputed payment, shall be paid by the City to the Contractor within twenty-one (21) calendar days, after all deficiencies to the Contract document that were noted during the Substantial Completion Inspection and listed on the attachment to the Certificate of Substantial Completion have been corrected, and provided the Contract has been fully performed and a final Certificate for Payment has been issued by the City. In addition, the Contractor shall provide to the City a certified statement of Release of Lien (AIA Document G706A or approved form), Consent of Surety, Warranty from Prime Contractor, Warranties from Suppliers and Manufacturers, training sessions, equipment/operating manuals, and as-built drawings.

31. Schedule

The Contractor shall, within five (5) days after the effective date of Notice to Proceed, prepare and submit a progress schedule covering project operations for the 30-day Contract period. This progress schedule shall be of the type generally referred to as a Critical Path Method (CPM), Critical Path Schedule (CPS), and Critical Path Analysis (CPA), and other similar designations. The CPM shall be used to control the timing and sequences of the project. All work shall be done in accordance with the CPM Planning and Scheduling. A written statement of explanation shall be submitted with the progress schedule. All costs incurred by the contractor to implement the CPM shall be borne by the Contractor and are part of their Contract.

32. General and Special Provisions

A. Terms used in this Contract which are defined in the Conditions of the Contract shall have the meanings designated in those Conditions.

B. An enumeration of the Contractor's General Comprehensive Liability Insurance requirements.

C. Appears in the General Conditions of the Contract for construction. Insurance requirements are also described in the Instructions to the Bidder section of the Project Manual. Contractor shall maintain adequate insurance in at least the maximum amounts, which the City could be liable under the New Mexico Tort Claims Act and shall provide proof of such insurance coverage to the City. It is the sole responsibility of the Contractor to comply with the law.

D. This Contract shall not become effective until: (1) approved by the Governing Body; and (2) signed by all parties required to sign this Contract.

E. The Contractor shall maintain detailed time records which indicate the date, time and nature of services rendered. These records shall be subject to inspection by the City, the Department of Finance and Administration and the State Auditor. The City shall have the right to audit billings both before and after payment. Payment under this Contract shall not foreclose the right of the City to recover excessive illegal payments.

F. The Contractor warrants that the Contractor presently has no interest and shall not acquire any interest, direct or indirect, which would conflict in any manner or degree with the performance or services required under this Contract.

G. The Contractor hereby warrants that the Contractor complies with the Americans with Disabilities Act, 29 CFR 1630.

H. Gender, Singular/Plural. Words of any gender used in this Contract shall be held and construed to include any other gender, and words in the singular number shall be held to include the plural, unless the context otherwise requires.

I. Captions and Section Headings. The captions and section headings contained in this Contract are for convenience of reference only, and in no way limit, define, or enlarge the terms, scope, and conditions of this Contract.

J. Certificates and Documents Incorporated. All certificates and documentation required by the provisions of the Contract shall be attached to this Contract at the time of execution and are hereby incorporated by reference as though set forth in full in this Contract to the extent they are consistent with its conditions and terms.

K. Separability. If any clause or provision of this Contract is illegal, invalid or unenforceable under present or future laws effective during the term of this Contract, then and in that event, it is the intention of the parties hereto that the remainder of this Contract shall not be affected thereby.

L. Words and Phrases. Words, phrases, and abbreviations, which have well-known technical or trade meanings used in the Contract documents shall be used according to such recognized meaning. In the event of a conflict, the more stringent meaning shall govern.

M. Relationship of Contract Documents. The Contract Documents are complementary, and any requirement of one Contract Document shall be as binding as if required by all.

N. Pursuant to NMSA 1978, Section 13-1-191, reference is hereby made to the Criminal Laws of New Mexico (including NMSA 1978, Sections 30-14-1, 30-24-2, and 30-41-1 through 30-41-3) which prohibit bribes, kickbacks, and gratuities, violation of which constitutes a felony. Further, the Procurement Code (NMSA 1978, Sections 13-1-28 through 13-1-199) imposes civil and criminal penalties for its violation.

O. Pursuant to NMSA 1978, Section 13-4-11. Reference is hereby made to the Minimum Wage on Public Works; weekly payments; posting wage scale; withholding funds.

IN WITNESS WHEREOF, the Parties have executed this Contract as of the date of the signature by the required approval authorities below.

CITY OF SANTA FE:

_____
ALAN WEBBER, MAYOR

DATE: _____

CONTRACTOR:
Unified Contractor, Inc.

_____
IVAN SANTISTEVAN, PRESIDENT

DATE: Nov 25, 2025

NMBTIN: 03-052225-000

ATTEST:

_____
ANDREA SALAZAR, CITY CLERK

Approved to form and legal sufficiency by:

Kevin L. Nault
Kevin L. Nault (Dec 2, 2025 15:42:59 MST)
ASSISTANT CITY ATTORNEY

APPROVED FOR FINANCES:

Emily K. Oster
EMILY OSTER, FINANCE DIRECTOR

Bidder Instructions:

Exhibit A

Items - Bidders do not have the ability to add or delete items.

Approx. Qty. - Quantities provides are estimates, only, and do not establish a definite quantity contract. Actual quantities purchased under a resulting agreement may vary.
UOM (Unit of Measure) - Bidders do not have the ability to change the UOM. Any variation from the UOM identified may be provided in the Comments.
Article and Description - Bidder cannot change Article and Description. Any clarification, explanation, brand name identification, etc. must be provided in the Comments.
Unit Price - Bidders must provide pricing that conforms with the identified Unit Price.
Comments - Bidders may only provide comments to explain or clarify an item, identify a brand name, or provide information as specifically stated in the corresponding ITB

Item	Approx. Qty.	UOM	Article and Description	Unit Price	Comments
			Wage Rates for Projects Under $60,000.00		
1	1	HR - Hour	Superintendent - Regular Hourly Rate	$ 45.67	Rates are not loaded
2	1	HR - Hour	Superintendent - Overtime Hourly Rate	$ 45.67	Rates are not loaded
3	1	HR - Hour	Journeyman or Experienced Worker - Regular Hourly Rate	$ 39.00	Carpenter - Rates are not loaded
4	1	HR - Hour	Journeyman or Experienced Worker - Overtime Hourly Rate	$ 58.50	Carpenter - Rates are not loaded
5	1	HR - Hour	Laborer - Regular Hourly Rate	$ 24.00	Skilled - Rates are not loaded
6	1	HR - Hour	Laborer - Overtime Hourly Rate	$ 36.00	Skilled - Rates are not loaded
			Wage Rates for Projects Over $60,000.00		
7	1	HR - Hour	Superintendent - Regular Hourly Rate	$ 55.00	Rates are not loaded
8	1	HR - Hour	Superintendent - Overtime Hourly Rate	$ 55.00	Rates are not loaded
9	1	HR - Hour	Journeyman or Experienced Worker - Regular Hourly Rate	$ 44.75	Carpenter - Rates are not loaded
10	1	HR - Hour	Journeyman or Experienced Worker - Overtime Hourly Rate	$ 67.13	Carpenter - Rates are not loaded
11	1	HR - Hour	Laborer - Regular Hourly Rate	$ 30.00	Skilled - Rates are not loaded
12	1	HR - Hour	Laborer - Overtime Hourly Rate	$ 45.00	Skilled - Rates are not loaded
13	1	Daily	Temporary Site Office Trailer, rental rate	$ 40.00	
14	1	Daily	Temporary Fencing, rental rate	$ 2.75	
15	1	Daily	Sanitary/toilet Facilities, rental rate	$ 8.33	
16		Percent	Discount off all materials. Enter zero if no discount is offered.	%	

On-Call Construction ITB 25163_Unified Contractor

Final Audit Report 2025-12-02

Created:	2025-11-25
By:	MATTHEW HARDING (mrharding@santafenm.gov)
Status:	Signed
Transaction ID:	CBJCHBCAABAA4L1f77RaA9E2o977IOn88bPFaeMTRyQc

"On-Call Construction ITB 25163_Unified Contractor" History

Document created by MATTHEW HARDING (mrharding@santafenm.gov)
2025-11-25 - 9:34:53 PM GMT- IP address: 63.232.20.2

Document emailed to Ivan Santistevan (ivan@unifiedcontractor.com) for signature
2025-11-25 - 9:35:33 PM GMT

Email viewed by Ivan Santistevan (ivan@unifiedcontractor.com)
2025-11-25 - 9:38:45 PM GMT- IP address: 50.149.150.78

Document e-signed by Ivan Santistevan (ivan@unifiedcontractor.com)
Signature Date: 2025-11-25 - 9:40:03 PM GMT - Time Source: server- IP address: 50.149.150.78

Document emailed to Kevin Nault (klnault@santafenm.gov) for signature
2025-11-25 - 9:40:05 PM GMT

Email viewed by Kevin Nault (klnault@santafenm.gov)
2025-12-02 - 10:42:12 PM GMT- IP address: 172.59.2.22

Signer Kevin Nault (klnault@santafenm.gov) entered name at signing as Kevin L. Nault
2025-12-02 - 10:42:57 PM GMT- IP address: 172.59.2.22

Document e-signed by Kevin L. Nault (klnault@santafenm.gov)
Signature Date: 2025-12-02 - 10:42:59 PM GMT - Time Source: server- IP address: 172.59.2.22

Agreement completed.
2025-12-02 - 10:42:59 PM GMT

Powered by Adobe Acrobat Sign

CERTIFICATE OF LIABILITY INSURANCE

DATE (MM/DD/YYYY): 09/08/2025

THIS CERTIFICATE IS ISSUED AS A MATTER OF INFORMATION ONLY AND CONFERS NO RIGHTS UPON THE CERTIFICATE HOLDER. THIS CERTIFICATE DOES NOT AFFIRMATIVELY OR NEGATIVELY AMEND, EXTEND OR ALTER THE COVERAGE AFFORDED BY THE POLICIES BELOW. THIS CERTIFICATE OF INSURANCE DOES NOT CONSTITUTE A CONTRACT BETWEEN THE ISSUING INSURER(S), AUTHORIZED REPRESENTATIVE OR PRODUCER, AND THE CERTIFICATE HOLDER.

IMPORTANT: If the certificate holder is an ADDITIONAL INSURED, the policy(ies) must have ADDITIONAL INSURED provisions or be endorsed. If SUBROGATION IS WAIVED, subject to the terms and conditions of the policy, certain policies may require an endorsement. A statement on this certificate does not confer rights to the certificate holder in lieu of such endorsement(s).

PRODUCER
Downey & Company
6565 AMERICAS PARKWAY NE
SUITE 750
ALBUQUERQUE NM 87110

CONTACT NAME: Maria Ankeny
PHONE (A/C, No, Ext): (505) 881-0300 **FAX (A/C, No):** (505) 881-0908
E-MAIL ADDRESS: mankeny@downeyandco.com

INSURER(S) AFFORDING COVERAGE	NAIC #
INSURER A : Employers Mutual Casualty Company	21415
INSURER B : Hamilton Mutual Insurance Company	14125
INSURER C : New Mexico Mutual Casualty Company	40627
INSURER D :	
INSURER E :	
INSURER F :	

INSURED
Unified Contractor, Inc.
PO Box 93984
Albuquerque NM 87199

COVERAGES **CERTIFICATE NUMBER:** 25-26 Multi **REVISION NUMBER:**

THIS IS TO CERTIFY THAT THE POLICIES OF INSURANCE LISTED BELOW HAVE BEEN ISSUED TO THE INSURED NAMED ABOVE FOR THE POLICY PERIOD INDICATED. NOTWITHSTANDING ANY REQUIREMENT, TERM OR CONDITION OF ANY CONTRACT OR OTHER DOCUMENT WITH RESPECT TO WHICH THIS CERTIFICATE MAY BE ISSUED OR MAY PERTAIN, THE INSURANCE AFFORDED BY THE POLICIES DESCRIBED HEREIN IS SUBJECT TO ALL THE TERMS, EXCLUSIONS AND CONDITIONS OF SUCH POLICIES. LIMITS SHOWN MAY HAVE BEEN REDUCED BY PAID CLAIMS.

INSR LTR	TYPE OF INSURANCE	ADDL INSD	SUBR WVD	POLICY NUMBER	POLICY EFF (MM/DD/YYYY)	POLICY EXP (MM/DD/YYYY)	LIMITS	
A	[X] COMMERCIAL GENERAL LIABILITY [ ] CLAIMS-MADE [X] OCCUR GEN'L AGGREGATE LIMIT APPLIES PER: [ ] POLICY [ ] PRO-JECT [ ] LOC [ ] OTHER:			BBC4650-26	01/15/2025	01/15/2026	EACH OCCURRENCE DAMAGE TO RENTED PREMISES (Ea occurrence) MED EXP (Any one person) PERSONAL & ADV INJURY GENERAL AGGREGATE PRODUCTS - COMP/OP AGG	$ 1,000,000 $ 100,000 $ 5,000 $ 1,000,000 $ 2,000,000 $ 2,000,000
B	AUTOMOBILE LIABILITY [X] ANY AUTO [ ] OWNED AUTOS ONLY [ ] SCHEDULED AUTOS [ ] HIRED AUTOS ONLY [ ] NON-OWNED AUTOS ONLY			6E7-20-06-26	01/15/2025	01/15/2026	COMBINED SINGLE LIMIT (Ea accident) BODILY INJURY (Per person) BODILY INJURY (Per accident) PROPERTY DAMAGE (Per accident) Medical payments	$ 1,000,000 $ $ $ $ 5,000
A	[X] UMBRELLA LIAB [ ] OCCUR [ ] EXCESS LIAB [ ] CLAIMS-MADE [ ] DED [ ] RETENTION $			6J29140	01/15/2025	01/15/2026	EACH OCCURRENCE AGGREGATE	$ 2,000,000 $ 2,000,000
C	WORKERS COMPENSATION AND EMPLOYERS' LIABILITY ANY PROPRIETOR/PARTNER/EXECUTIVE OFFICER/MEMBER EXCLUDED? Y / N: Y (Mandatory in NH) If yes, describe under DESCRIPTION OF OPERATIONS below	N / A		0102584.106	01/15/2025	01/15/2026	[ ] PER STATUTE [ ] OTH-ER E.L. EACH ACCIDENT E.L. DISEASE - EA EMPLOYEE E.L. DISEASE - POLICY LIMIT	$ 500,000 $ 500,000 $ 500,000

DESCRIPTION OF OPERATIONS / LOCATIONS / VEHICLES (ACORD 101, Additional Remarks Schedule, may be attached if more space is required)

CERTIFICATE HOLDER
City of Santa Fe
200 Lincoln Ave
Santa Fe NM 87501

CANCELLATION
SHOULD ANY OF THE ABOVE DESCRIBED POLICIES BE CANCELLED BEFORE THE EXPIRATION DATE THEREOF, NOTICE WILL BE DELIVERED IN ACCORDANCE WITH THE POLICY PROVISIONS.

AUTHORIZED REPRESENTATIVE
Maria J Ankeny

© 1988-2015 ACORD CORPORATION. All rights reserved.

From: DUTTON-LEYDA, TRAVIS K.
To: KAHAHANE, ELIZABETH L.
Cc: Purchasing DET
Subject: Re: Determination Request – Miscellaneous General Contracting work for the City of Santa Fe
Date: Wednesday, August 20, 2025 9:05:00 AM
Attachments: image001.png

Hi, this is construction.

Thank you.

Regards,

Travis Dutton-Leyda
Chief Procurement Officer
City of Santa Fe
200 Lincoln Avenue
Santa Fe, NM 87501
505-629-8351
tkduttonleyda@santafenm.gov

https://santafenm.gov/finance-2/purchasing-1

CITY OF SANTA FE | FACILITIES

Vision without action is merely a dream.
Action without vision passes the time.
Vision with action can change the world. ~ Joel A. Barker

> On Aug 20, 2025, at 8:56 AM, KAHAHANE, ELIZABETH L. <elkahahane@santafenm.gov> wrote:
>
> Aloha Purchasing!
>
> Facilities Division is requesting a SOW determination for the following:
>
> > The Contractor shall perform the following work in accordance with their Bid Pricing, attached hereto and made a part thereof, as Exhibit A:
> > 1. This work shall include Miscellaneous General Contracting work for the City

of Santa Fe.

2. The Contractor shall be required to provide On-Call General Contracting Services for any number of the activities listed under this Scope of Work upon the request of the City. Once a need is identified, the City will issue a written Task Order to the Contractor detailing the services required. Upon receiving the City's request for services, the Contractor shall promptly provide the City with an estimate (based upon the rates submitted in the Bid Form), cost summary, and project schedule required to complete the assignment or task. Project schedules, negotiated price, and completion dates shall be determined on a project-by-project basis and dependent upon the urgency of that task. The Contractor may be required to do some of the work in phases. The Contractor shall be required to provide the requested labor and all equipment and materials within one week of a request issuance of a Notice to Proceed unless otherwise arranged. The Contractor shall agree to provide required labor within 24 hours for emergency situations whenever possible.

3. The City of Santa Fe Public Works Facilities Division shall be able to utilize this On-Call Contract as needed and as funding is available. All other City of Santa Fe staff will only be authorized to utilize this On-Call Contract with prior, written approval of the scope of work, from the Facilities Division Director, before commencing any work applicable to this On-Call Contract.

4. Contractor is responsible for all required permits and licenses required to perform this work. Contractor shall be responsible for adherence to the Contract Documents, Construction Documents, Specifications, and approved directives.

5. Contractor shall be responsible for any applicable Local, County, State and Federal requirements and permits.

6. Contractor shall be responsible for verifications of all existing conditions, measurements, and dimensions for bidding. Contractor shall be responsible for all permits, fees, and State and/or City inspections associated with their work.

Please let me know if additional information is required.
Thank you!

Best,
Elizabeth "Lisa" Kahahane, CPO
Contract Administrator | Facilities Division | Public Works Dept.
Email: elkahahane@santafenm.gov
M: (505) 795-2439
O: (505) 955-5934

CITY OF SANTA FE
FACILITIES

This e-mail and any attachments may contain confidential information and/or

information protected by intellectual property rights for the exclusive attention of the intended addressees. If you have received this transmission in error, please immediately notify the sender by return e-mail and delete this message and its attachments. Unauthorized use, copying or further full or partial distribution of this e-mail or its contents is prohibited.

Services Offered to the City of Santa Fe (FY26)

Approved:
These services have been approved by the New Mexico Council for Purchasing from Persons with Disabilities and are available through Horizons of New Mexico.

- ADA Accessibility Consulting Services
- Auctioneering Services
- Bulk Mailing and Sorting
- Call Center Services
- Computer Refurbishing
- Courier Services
- Decontamination, Sanitation and Sterilization Services
- Debris Removal
- Document Imaging
- Document Shredding
- Envelope Stuffing
- General Labor
- Hard Drive Destruction
- Janitorial and Housekeeping Services – Including Carpet Cleaning & Floor Care
- Landscape Irrigation
- Landscaping
- Mailing Services
- Management of an Assistive Technology Reuse and Recycling Program
- Medical Waste Disposal
- Meeting Minute Preparation Services
- Pest Control and Extermination Services
- Printing Services
- Rest Area Maintenance
- Screen Printing
- Snow Removal
- Temporary Staffing Services
- Yard, Grounds, and Lawn Maintenance

Permissive:
The services have been approved by the New Mexico Council for Purchasing from Persons with Disabilities as permissible for sale under the State Use Act through Horizons of New Mexico. While the Council recognizes that certain Horizons of New Mexico members are capable of performing the services listed below, said services are considered permissive and excluded from the mandatory aspect of the State Use Program. Any procurement of the below services through Horizons of New Mexico is at the discretion of the purchasing agent and will be considered by the Council on a case-by-case basis.

- Graphic Design
- Graphic Design - Logo Design
- IT – Enterprise Application
- IT – IV & V
- IT Network and Database Management
- IT Support
- IT Security Services
- IT – Web Design
- IT – Web Programmer
- Marketing
- Social Media Marketing

For the complete State Use service list, please go to: http://horizonsofnewmexico.org/services.html

GB Packet_Unified Contractor_On-Call GC ITB 25163

Final Audit Report 2025-12-08

Created:	2025-12-05
By:	Elizabeth Kahahane (elkahahane@santafenm.gov)
Status:	Signed
Transaction ID:	CBJCHBCAABAA6lyTc3wA8jbsnnwSsHWH6AGLxMZbvbDz

"GB Packet_Unified Contractor_On-Call GC ITB 25163" History

Document created by Elizabeth Kahahane (elkahahane@santafenm.gov)
2025-12-05 - 6:43:51 PM GMT- IP address: 63.232.20.2

Document emailed to CARYN GROSSE (clgrosse@santafenm.gov) for signature
2025-12-05 - 6:45:37 PM GMT

Email viewed by CARYN GROSSE (clgrosse@santafenm.gov)
2025-12-05 - 6:48:27 PM GMT- IP address: 104.47.65.254

Document e-signed by CARYN GROSSE (clgrosse@santafenm.gov)
Signature Date: 2025-12-05 - 6:48:38 PM GMT - Time Source: server- IP address: 63.232.20.2

Document emailed to Timothy Farrell (tgfarrell@santafenm.gov) for signature
2025-12-05 - 6:48:40 PM GMT

Email viewed by Timothy Farrell (tgfarrell@santafenm.gov)
2025-12-05 - 6:57:25 PM GMT- IP address: 104.47.65.254

Document e-signed by Timothy Farrell (tgfarrell@santafenm.gov)
Signature Date: 2025-12-05 - 6:58:04 PM GMT - Time Source: server- IP address: 174.56.2.34

Document emailed to JOHN BURNETT (jsburnett@santafenm.gov) for signature
2025-12-05 - 6:58:06 PM GMT

Email viewed by JOHN BURNETT (jsburnett@santafenm.gov)
2025-12-08 - 2:50:27 PM GMT- IP address: 71.228.98.124

Document e-signed by JOHN BURNETT (jsburnett@santafenm.gov)
Signature Date: 2025-12-08 - 2:50:53 PM GMT - Time Source: server- IP address: 71.228.98.124

Powered by Adobe Acrobat Sign

Agreement completed.

2025-12-08 - 2:50:53 PM GMT

CERTIFICATE OF LIABILITY INSURANCE

DATE (MM/DD/YYYY): 01/12/2026

THIS CERTIFICATE IS ISSUED AS A MATTER OF INFORMATION ONLY AND CONFERS NO RIGHTS UPON THE CERTIFICATE HOLDER. THIS CERTIFICATE DOES NOT AFFIRMATIVELY OR NEGATIVELY AMEND, EXTEND OR ALTER THE COVERAGE AFFORDED BY THE POLICIES BELOW. THIS CERTIFICATE OF INSURANCE DOES NOT CONSTITUTE A CONTRACT BETWEEN THE ISSUING INSURER(S), AUTHORIZED REPRESENTATIVE OR PRODUCER, AND THE CERTIFICATE HOLDER.

IMPORTANT: If the certificate holder is an ADDITIONAL INSURED, the policy(ies) must have ADDITIONAL INSURED provisions or be endorsed. If SUBROGATION IS WAIVED, subject to the terms and conditions of the policy, certain policies may require an endorsement. A statement on this certificate does not confer rights to the certificate holder in lieu of such endorsement(s).

PRODUCER	CONTACT NAME: Maria Ankeny	
Downey & Company 6565 AMERICAS PARKWAY NE SUITE 750 ALBUQUERQUE NM 87110	PHONE (A/C, No, Ext): (505) 881-0300	FAX (A/C, No): (213) 325-8752
	E-MAIL ADDRESS: mankeny@downeyandco.com	

INSURED	INSURER(S) AFFORDING COVERAGE	NAIC #
Unified Contractor, Inc. PO Box 93984 Albuquerque NM 87199	INSURER A : Employers Mutual Casualty Company	21415
	INSURER B : Hamilton Mutual Insurance Company	14125
	INSURER C : New Mexico Assurance Company	13673
	INSURER D :	
	INSURER E :	
	INSURER F :	

COVERAGES **CERTIFICATE NUMBER:** 26/27 Multi **REVISION NUMBER:**

THIS IS TO CERTIFY THAT THE POLICIES OF INSURANCE LISTED BELOW HAVE BEEN ISSUED TO THE INSURED NAMED ABOVE FOR THE POLICY PERIOD INDICATED. NOTWITHSTANDING ANY REQUIREMENT, TERM OR CONDITION OF ANY CONTRACT OR OTHER DOCUMENT WITH RESPECT TO WHICH THIS CERTIFICATE MAY BE ISSUED OR MAY PERTAIN, THE INSURANCE AFFORDED BY THE POLICIES DESCRIBED HEREIN IS SUBJECT TO ALL THE TERMS, EXCLUSIONS AND CONDITIONS OF SUCH POLICIES. LIMITS SHOWN MAY HAVE BEEN REDUCED BY PAID CLAIMS.

INSR LTR	TYPE OF INSURANCE	ADDL INSD	SUBR WVD	POLICY NUMBER	POLICY EFF (MM/DD/YYYY)	POLICY EXP (MM/DD/YYYY)	LIMITS	
A	[X] COMMERCIAL GENERAL LIABILITY [ ] CLAIMS-MADE [X] OCCUR GEN'L AGGREGATE LIMIT APPLIES PER: [ ] POLICY [X] PRO-JECT [ ] LOC [ ] OTHER:			BBC4650-26	01/15/2026	01/15/2027	EACH OCCURRENCE	$ 1,000,000
							DAMAGE TO RENTED PREMISES (Ea occurrence)	$ 100,000
							MED EXP (Any one person)	$ 5,000
							PERSONAL & ADV INJURY	$ 1,000,000
							GENERAL AGGREGATE	$ 2,000,000
							PRODUCTS - COMP/OP AGG	$ 2,000,000
								$
B	AUTOMOBILE LIABILITY [X] ANY AUTO [ ] OWNED AUTOS ONLY [ ] SCHEDULED AUTOS [X] HIRED AUTOS ONLY [X] NON-OWNED AUTOS ONLY			6E7-20-06-26	01/15/2026	01/15/2027	COMBINED SINGLE LIMIT (Ea accident)	$ 1,000,000
							BODILY INJURY (Per person)	$
							BODILY INJURY (Per accident)	$
							PROPERTY DAMAGE (Per accident)	$
							Medical payments	$ 5,000
A	[X] UMBRELLA LIAB [X] OCCUR EXCESS LIAB [ ] CLAIMS-MADE [ ] DED [ ] RETENTION $			6J29140	01/15/2026	01/15/2027	EACH OCCURRENCE	$ 2,000,000
							AGGREGATE	$ 2,000,000
								$
C	WORKERS COMPENSATION AND EMPLOYERS' LIABILITY ANY PROPRIETOR/PARTNER/EXECUTIVE OFFICER/MEMBER EXCLUDED? (Mandatory in NH) Y / N: N If yes, describe under DESCRIPTION OF OPERATIONS below	N / A		0102584.107	01/15/2026	01/15/2027	[X] PER STATUTE [ ] OTH-ER	
							E.L. EACH ACCIDENT	$ 500,000
							E.L. DISEASE - EA EMPLOYEE	$ 500,000
							E.L. DISEASE - POLICY LIMIT	$ 500,000

DESCRIPTION OF OPERATIONS / LOCATIONS / VEHICLES (ACORD 101, Additional Remarks Schedule, may be attached if more space is required)

CERTIFICATE HOLDER

City of Santa Fe

CANCELLATION

SHOULD ANY OF THE ABOVE DESCRIBED POLICIES BE CANCELLED BEFORE THE EXPIRATION DATE THEREOF, NOTICE WILL BE DELIVERED IN ACCORDANCE WITH THE POLICY PROVISIONS.

AUTHORIZED REPRESENTATIVE

Maria J Ankeny

© 1988-2015 ACORD CORPORATION. All rights reserved.

CITY OF SANTA FE

Date: December 5, 2025

To: Governing Body

From: Jake Martinez, Public Works Project Manager II Jacob Martinez (Dec 8, 2025 14:55:51 MST)

Via: Sam Burnett, Interim Public Works Department Director JOHN BURNETT (Dec 10, 2025 16:24:19 MST)
Maria Tucker, Community Services Director Maria Tucker (Dec 10, 2025 15:44:27 MST)
Tim Farrell, Interim Facilities Division Director Timothy Farrell

Subject: Capital Appropriation Agreement Project 25-J4371 for South Side Teen Center

---

ACTION:
Request for Approval of Capital Appropriation Grant Agreement with New Mexico Department of Finance and Administration for Project 25-J4371 Improvements to the South Side Teen Center in the Total Amount of $1,764,580 with a Reversion Date of June 30, 2027. (Jake Martinez, Public Works Project Manager II, jemartinez@santafenm.gov)

BACKGROUND AND SUMMARY:
The City of Santa Fe received Capital Appropriation Project 25-J4371 in the amount of $1,764,579.06, which reauthorized Capital Appropriation Project 21-F2901 and extends the reversion date to June 30, 2027.

A Budget Amendment Resolution (BAR) is not required, as the grant funds have already been incorporated into the FY 2026 Revenue Carryforward.

This appropriation does not require an allocation for Art in Public Places (AIPP) and the total of $1,764,579.06 is available for project budget allocations. All funds are expected to be expended prior to the June 30, 2027, reversion date.

The Public Works Department's Facilities Division, in partnership with the Community Services Department, is collaborating with Studio Southwest Architects to develop plans for facility enhancements at the Santa Fe Teen Center. Planned improvements include:

- Construction of a new dance studio, and
- Expanded cold storage to support kitchen and food-service operations.

These funds will support final design, permitting, and construction of the new amenities.

ATTACHMENTS:
NMDFA Grant Agreement Project 25-J4371
PLID Form

PRIOR APPROVALS AND SUPPORTING INFORMATION:

FUNDING SOURCE:
New Mexico Department of Finance & Administration Capital Appropriation Project 25-J4371

Fund Name/Number: Facilities/320
Munis Org Name/Number: Facility CIP/3209980
Munis Object Name/Number: WIP Construction/572970

Budget Officer/Designee: Andy Hopkins Date: _____
Budget Officer Comment/Exceptions: _____

PROCUREMENT METHOD:
Not Applicable.

Chief Procurement Officer (CPO)/Designee: _____ Date: _____
CPO Comment/Exceptions: _____

ASSOCIATED APPROVALS:
IT Components included? ☐ Yes | ☒ No
Approval: _____ Title: _____ Date: _____
Comment/Exceptions: _____

Treasury/Point of Sale Components included? ☐ Yes | ☒ No
Approval: _____ Title: _____ Date: _____
Comment/Exceptions: _____

Vehicles included? ☐ Yes | ☒ No
Approval: _____ Title: _____ Date: _____
Comment/Exceptions: _____

Construction to City Facilities, Furniture, and/or Fixtures, included? ☐ Yes | ☒ No
Approval: _____ Title: _____ Date: _____
Comment/Exceptions: _____

Is this an externally funded purchase? ☒ Yes | ☐ No
If yes, what is the issuing agency: New Mexico Department of Finance & Administration
Approval: ERIKA LUJAN ERIKA LUJAN (Dec 17, 2025 16:23:46 MST) Title: _____ Date: _____
Comment/Exceptions: Capital Appropriation Project 25-J4371

Capital Asset or Project? ☒ Yes | ☐ No
Project Ledger Number FA183200T
Approval: ERIKA LUJAN ERIKA LUJAN (Dec 17, 2025 16:23:46 MST) Title: _____ Date: _____
Comment/Exceptions: _____

NEW MEXICO CAPITAL OUTLAY GRANT AGREEMENT
CAPITAL APPROPRIATION PROJECT

THIS AGREEMENT is made and entered into by and between the State of New Mexico, Department of Finance & Administration, 407 Galisteo Street, Santa Fe, NM 87501, ("**Department**") and the City of Santa Fe, ("**Grantee**") (individually "**Party**" and collectively "**Parties**"). This Agreement shall be effective as of the date the Department executes it ("**Effective Date**").

WITNESSETH

WHEREAS, in the Laws of 2025, Chapter 158, Section 373, the Legislature made an appropriation to the Department, funds from which the Department is making available to the Grantee pursuant to this Agreement; and

WHEREAS, the Department is granting to Grantee, and the Grantee is accepting the grant of funds from this appropriation, in accordance with the terms and conditions of this Agreement;

NOW, THEREFORE, in consideration of the mutual covenants and obligations contained herein, the parties hereby mutually agree as follows:

AGREEMENT

I. PROJECT DESCRIPTION, GRANT AMOUNT, AND REVERSION

A. **25-J4371** ("**Project**") 6/30/2027 ("**Reversion Date**"). Laws of 2025, Chapter 158, Section 373, One million seven hundred sixty-four thousand five hundred seventy-nine dollars and six cents , $1,764,579.06, The time of expenditure for the local government division project in Subsection 342 of Section 29 of Chapter 138 of Laws 2021 to plan, design, construct, furnish and equip a teen and resource center on the south side of Santa Fe in Santa Fe county is extended through fiscal year 2027..

B. Grantee's total reimbursements shall not exceed $1,764,579.06 One million seven hundred sixty-four thousand five hundred seventy-nine dollars and six cents , ("**Appropriation Amount**") minus the allocation for Art in Public Places ("**AIPP amount**"), if applicable, $0.00 Zero Dollars and No Cents, which equals $1,764,579.06 One million seven hundred sixty-four thousand five hundred seventy-nine dollars and six cents ("**Adjusted Appropriation Amount**").

C. In the event of a conflict among the Appropriation Amount, the Reversion Date, as defined herein and/or the purpose of the Project, as set forth in this Agreement, and the corresponding appropriation language in the laws cited above in this Article I, the language of the laws cited herein shall control.

The information contained in Article I is referred to collectively as the "**Project Description**."

II. DISBURSEMENT LIMITATION

A. Upon the Effective Date, the Grantee shall submit to the Department a comprehensive procurement plan and expenditure plan, detailing a Project timeline with milestones, required

procurements, and identifying expected expenditures per milestone (collectively, "**Project Budget**"). The Department shall review and approve the Project Budget by approving a Notice of Department's Obligation ("**Notice of Obligation**"), in accordance with the Project Description, a sample of which is attached hereto as **Exhibit B** and incorporated herein by reference. After receipt of approved Notice of Obligation, the Grantee may be reimbursed for allowable costs up to the Adjusted Appropriation Amount. This Agreement and any reimbursements up to the Adjusted Appropriation Amount are expressly conditioned upon the following:

a. Irrespective of any Notice of Obligation, Grantee's expenditures shall be made in accordance with the Project Budget, on or before the Reversion Date and/or, if applicable, any Early Termination Date; and
b. The total amount received by Grantee shall not exceed the lesser of:
    i. the Adjusted Appropriation Amount identified in Article I (B) herein; or
    ii. the total of all amounts stated in the Notice(s) of Obligation evidencing the Department has received and accepted Grantee's Third Party Obligation(s); and
c. Grantee's expenditures are made and accounted for pursuant to the State Procurement Code, State's Model Accounting Practices, and execution of binding written obligations or purchase orders with third-party contractors or vendors for the provision of services, including professional services, or the purchase of tangible personal property and real property for the Project ("**Third Party Obligations**"); and
d. Grantee's submittal of timely Requests for Payment and supporting documentation in accordance with the procedures set forth in this Agreement; and
e. In the event capital assets acquired with Project funds are to be sold, leased, or licensed to or operated by a private entity, the sale, lease, license, or operating agreement:
    i. must be approved by the applicable oversight entity (if any) in accordance with §§ 13-6-2, 13-6-2.1, and 13-6-3; or
    ii. If no oversight entity is required to approve the transaction, the Department of Finance and Administration's Infrastructure Planning Development Division (IPDD) must approve it as complying with the law.

B. Prior to the sale, lease, license, or operating agreement being approved pursuant to Articles II(A)(e)(i) or (ii) herein, the Department may, in its sole and absolute discretion, unless inconsistent with State Board of Finance imposed conditions, reimburse Grantee for necessary expenditures incurred to develop the Project sufficiently to make the sale, lease, license, or operating agreement commercially feasible, limited to planning and design expenditures; and

C. Grantee's submission of documentation of all Third Party Obligations and amendments thereto (including terminations) to the Department and the Department's issuance of a Notice of Obligation for a particular amount in accordance with the terms of this Agreement shall be governed by the following:

a. Grantee is authorized to budget the particular amount set forth in the Notice of Obligation, execute the Third Party Obligation, and request the Third Party to begin work after issuance of a Notice of Obligation by the Department.
b. Grantee acknowledges and agrees that any Third Party Obligations agreed to prior to receiving a Notice of Obligation are its sole responsibility.
c. Grantee shall submit to the Department one copy of all Third Party Obligations and amendments thereto (including terminations) as soon as possible after execution by the

Third Party but prior to execution by the Grantee.

d. Department may, in its sole and absolute discretion, issue a Notice of Obligation for the particular amount of a Third Party Obligation that only obligates the Department to reimburse Grantee's expenditures made on or before the Reversion Date or an Early Termination Date. The current Notice of Obligation form is incorporated herein and attached hereto as **Exhibit B**.

D. Grantee shall provide all necessary qualified personnel, materials, and facilities to implement the Project. The Grantee shall finance its share (if any) of the costs of the Project, including all Project overruns.

E. Prior to entering into this Agreement, the Department conducted a risk assessment on the Grantee and a project readiness review for the Project. In accordance with State Model Accounting Practices, FIN 9.2, if the Department determines that the expenditure of Project funds by the Grantee requires special conditions, those conditions are identified and listed in **Exhibit C**, which is attached and incorporated by reference. The Parties agree that, to the extent the Department, in its sole and absolute discretion, determines additional special conditions are necessary or that existing special conditions are no longer required, it may update **Exhibit C** from time to time without the need for a formal amendment of this Agreement.

F. Project funds shall not be used for purposes other than those authorized by the Department in accordance with the Project Description.

G. Project funds cannot be used to reimburse the Grantee for indirect Project costs unless specifically allowed by law.

III. NOTICES

The following provisions shall apply whenever written notices, including written decisions, are to be given or received related to this Agreement.

A. The Grantee designates the person(s) listed below, or their successor, as their official representative(s) concerning all matters related to this Agreement:

Grantee: City of Santa Fe
Name: Alan Webber
Title: Mayor
Address: PO Box 909, Santa Fe, NM 87504
Email: mayor@santafenm.gov
Telephone: 505-955-6590

B. The Grantee designates the person(s) listed below, or their successor, as their Fiscal Officer or Fiscal Agent concerning all matters related to this Agreement:

Grantee: City of Santa Fe
Name: Emily Oster
Title: Finance Director
Address: PO Box 909, Santa Fe, NM 87504

Email: ekoster@santafenm.gov
Telephone: 505-629-3411

C. The Department designates the persons listed below, or their successors, as the Points of Contact for matters related to this Agreement.

Department: DFA/Local Government Division
Name: Daniel Catanach
Title: Grant Manager
Address: Bataan Memorial Bldg. Rm 202, Santa Fe NM 87501
Email: danieln.catanach@dfa.nm.gov
Telephone: 505-231-6090

The Parties agree that all notices, including written decisions, related to this Agreement shall be sent to the persons named above by email or regular mail. For mailings, notices shall be deemed to have been given and received upon the date of the receiving party's actual receipt or five (5) calendar days after mailing, whichever shall first occur. In the case of email transmissions, the notice shall be deemed to have been given and received on the date reflected on the delivery receipt of the email.

IV. TERM & DEADLINE TO EXPEND FUNDS

A. The term of this Agreement shall begin on the Effective Date and terminate on the 30th day of June during the calendar year of the Reversion Date unless Terminated Before Reversion Date ("**Early Termination**") pursuant to Article V herein (collectively "**Term**").

B. The Project's funds must be expended on or before the Reversion Date and, if applicable, the Early Termination Date of this Agreement.

a. For purposes of this Agreement, it is not sufficient for the Grantee to encumber the Project funds on its books on or before the Reversion Date or Early Termination Date.
b. For purposes of this Agreement, an expenditure of funds has occurred on the date the particular quantity of goods is delivered to and received by the Grantee, title to the goods is transferred to the Grantee, and/or as of the date particular services are rendered to and accepted by the Grantee.
c. For purposes of this Agreement, an encumbrance of funds pursuant to a contract or purchase order with a third party does not qualify as an expenditure.

V. EARLY TERMINATION

A. General Provision. The Department may terminate this Agreement before the Reversion Date based on the Completion of the Project, Complete Expenditure of the Adjusted Appropriation, and/or Violation of this Agreement. Early Termination hereunder includes:

a. Termination due to completion of the Project before the Reversion Date;
b. Termination due to complete expenditure of the Adjusted Appropriation Amount before the Reversion Date;
c. Termination for violation of the terms of this Agreement; or
d. Termination for suspected mishandling of public funds, including but not limited to fraud, waste, abuse, and conflicts of interest.

B. Non-appropriation. This Agreement is expressly contingent upon the New Mexico State Legislature making sufficient appropriations and authorizations for the Project Description.

   a. If the Legislature does not appropriate the Appropriation Amount, this Agreement shall terminate upon the Department giving the Grantee written notice of such termination. Such termination shall be effective as of the effective date of the law making the non-appropriation.
      i. The Department's decision as to whether sufficient appropriations or authorizations are available shall be final. Grantee hereby waives any rights to assert an impairment of contract claim against the State of New Mexico in the event of Early Termination of this Agreement.
   b. As used herein, "non-appropriate" or "non-appropriation" includes the following actions by the New Mexico Legislature:
      i. Deauthorization, reauthorization, or revocation of a prior authorization.

C. Grant Disbursements in the Event of Early Termination. In the event of Early Termination, the Department's sole and absolute obligation to reimburse the Grantee is expressly conditioned upon the limitations set forth in Article II above.

D. Notice. Either Party may terminate this Agreement prior to the Reversion Date by providing the other Party with a minimum of fifteen (15) days advance written notice of the Early Termination. Grantee hereby waives any rights to assert an impairment of contract claim against the State of New Mexico in the event of Early Termination of this Agreement by the Department.

VI. SUSPENSION OF NEW OR FURTHER OBLIGATIONS

A. Department, in its sole and absolute discretion, may provide written notice to Grantee to suspend entering into further obligations. Upon the receipt of such written notice by the Grantee:

   a. Grantee shall immediately suspend entering into new or further written obligations with third parties;
   b. Department will suspend the issuance of any new or further Notice of Obligation under this Agreement; and
   c. Department may direct the Grantee to implement a corrective action plan in accordance with Article VI (D) herein.

B. In the event of Suspension of this Agreement, the Department's sole and absolute obligation to reimburse the Grantee is expressly conditioned upon the limitations set forth in Article II herein.

C. A suspension of new or further obligations under this Agreement shall remain in effect unless or until the date the Grantee receives written notice given by the Department informing the Grantee that the Suspension has been lifted or that the Agreement has been Early Terminated in accordance with Article V herein. If the Suspension is lifted, the Department will consider further requests for a Notice of Obligation.

D. Corrective Action Plan in the Event of Suspension. Where the Department, in its sole and absolute discretion, directs Grantee to suspend entering into new or further written obligations with third parties pursuant to Article VI(A), the Department may, but is not obligated to, require the Grantee to develop and implement a written corrective action plan to remedy the grounds for the Suspension.

a. Such a corrective action plan must be approved by the Department and be signed by the Grantee.
b. Failure to sign a corrective action plan or meet the terms and deadlines set forth in the signed corrective action plan is hereby deemed a violation of the terms of this Agreement for purposes of Early Termination, Article V(A)(c).
c. A corrective action plan shall be in addition to, and not in lieu of, any other equitable or legal remedy authorized hereunder or at law, including but not limited to Early Termination.

VII. AMENDMENTS

Unless expressly stated otherwise herein, this Agreement shall not be altered, changed, or amended except by an instrument in writing duly executed by both parties hereto with the same formalities as this agreement.

VIII. REPORTING

A. Database Reporting

a. Grantee shall provide the Department with quarterly reports of Project activity, entering the required Project information directly into a database required by the Department.
b. Additionally, Grantee shall certify on each Request for Payment form, attached hereto as **Exhibit A** and incorporated herein, that all information provided in the database is true and accurate, updates to the database have been maintained, and all Project activity complies with applicable law and the terms of this Agreement.
c. Grantee hereby acknowledges that failure to perform and/or certify updates to the database will jeopardize the reimbursement of funds. The Department shall give Grantee a minimum of fourteen (14) days' advance written notice of any changes to the information the Grantee is required to report.
d. At the Department's discretion, all reports required hereunder may be directed to and facilitated through an electronic database.
e. Quarterly reports shall be due on the last day of the month, that is, 30 days prior to the end of the quarter following the execution of this Agreement by the Department and ending during the quarter of the submission of the final request for reimbursement for the Project, or the following quarter.

B. Requests for Additional Information/Project Inspection

During the term of this Agreement and during the period of time during which the Grantee must maintain records pursuant to Article VIII, the Department may:

i. request such additional information regarding the Project as it deems necessary; and

ii. conduct, at reasonable times and upon reasonable notice, onsite inspections of the Project.

Grantee shall respond to such requests for additional information within a reasonable period of time, as established by the Department.

B. Requests for Additional Information/Project Inspection

a. During the term of this Agreement and the Record Retention Period, the Department may:
   i. Request additional information regarding the Project as it deems necessary and
   ii. Conduct on-site inspections of the Project at reasonable times and upon reasonable notice.
b. Grantee shall respond to such requests for additional information within the time established by the Department.

IX. REQUEST FOR PAYMENT PROCEDURES

A. Grantee shall request payment by submitting the form attached hereto as **Exhibit A**. Payment requests are subject to the following procedures:

a. Each Request for Payment must be in accordance with the Project Budget and contain proof of payment by the Grantee or liabilities incurred by the Grantee.
   i. Proof of payment must demonstrate the validity of an expenditure or liabilities incurred by Grantee.
   ii. However, Grantee may be reimbursed for unpaid liabilities only if the Department, in its sole and absolute discretion, agrees to do so and in accordance with any special conditions imposed by the Department.
   iii. The Grantee shall make payment to those contractors or vendors within five (5) business days from the date of receiving reimbursement from the Department or in a shorter period than the Department may prescribe in writing.
   iv. The Department reserves the right to make such payments directly to the contractors or vendors as a special condition under this Agreement.
   v. The Grantee is required to certify to the Department proof of payment to the third-party contractor or vendor within five (5) business days from the date the Department reimburses the Grantee.

B. Until the Project is fully planned, designed, and all necessary procurements identified in the Project Budget are completed, Grantee's reimbursements will be limited to the planning, design, and procurement costs outlined in the Project Budget. Once the planning, designing, and procuring stages are complete, the Grantee must obligate at least ten percent (10%) of the Adjusted Appropriation Amount within one (1) year and must have utilized at least eighty-five percent (85%) of the Adjusted Appropriation Amount six (6) months before the reversion date.

C. Deadlines. Grantee shall submit requests for Payments to the Department on the earlier of:

a. Immediately as Grantee receives them, but at a maximum of thirty (30) days from when Grantee incurred the expenditure or liability; or

b. Twenty (20) days from the date of Early Termination or Reversion Date for expenditures or liabilities incurred before the Early Termination date or Reversion Date.

D. Grantee's failure to abide by the requirements set forth in Article II and Article IX herein may result in the denial of its Request for Payment. Department reserves the right to reject a payment request for the Project unless and until it is satisfied that the expenditures or liabilities are for permissible purposes within the meaning of the Project Description, identified within the Project Budget, and that the Grantee is otherwise in compliance with this Agreement.

a. Department's authority to reject any Request for Payment is in addition to, and not in lieu of, any other legal or equitable remedy available to the Department under this Agreement, at law, or in equity.

X. PROJECT CONDITIONS AND RESTRICTIONS

A. The following general conditions and restrictions shall apply to the Project:

a. The Project's funds must be spent in accordance with all applicable state laws, regulations, policies, and guidelines, including, but not limited to, the State Procurement Code.
b. The Project's expenditures and liabilities must be accounted for in accordance with the State's Model Accounting Practices, as amended from time to time.
c. The Project must be implemented in accordance with the New Mexico Public Works Minimum Wage Act, Section 13-4-10 through 13-4-17 NMSA 1978, as applicable.
d. The Project must provide a public benefit above and beyond any incidental benefit to private entities in accordance with applicable law, including, but not limited to, Article IX, Section 14 of the Constitution of the State of New Mexico.
e. Without prior written approval from the Department and State Board of Finance, for the useful life of any asset purchased under this Agreement, Grantee shall not convert any property acquired, built, renovated, repaired, designed, or developed with Project funds to uses other than those specified in the Project Description.
    i. In addition to other remedies available at law or in equity, any disposal or conversion of property acquired, built, renovated, repaired, designed, or developed with Project funds without the Department's and the Board of Finance's express written approval will trigger the Department's right to reimbursement from Grantee of the Appropriated Amount, transfer proceeds from any disposition of property to the State, or otherwise provide consideration to the State for the Appropriated Amounts.
f. Grantee shall comply with all applicable federal and state laws, rules, and regulations pertaining to civil rights and equal employment opportunity.
    i. In accordance with all such laws, rules, and regulations, the Grantee agrees to assure that no person shall, on the grounds of race, color, national origin, sex, sexual preference, age, or handicap, be excluded from participation in the Project, use of the Project, employment with Grantee, or otherwise be denied benefits/subject to discrimination for any activity performed under this Agreement.
g. Where the Department, in its sole and absolute discretion, determines Grantee has failed to comply with the above conditions and restriction, Grantee agrees to take appropriate

steps to correct any deficiencies immediately. The Grantee's failure to implement such appropriate steps within a reasonable time, but no longer than thirty (30) days after notice from the Department, constitutes a breach of this Agreement and grounds for Early Termination.

XI. REPRESENTATIONS AND WARRANTIES

A. Reliance by Department.

a. Grantee expressly acknowledges that the Department relies on the representations and warranties made by Grantee in this Agreement. Grantee acknowledges that such representations and warranties are a material inducement for the Department to enter into this Agreement and provide the Appropriated Amount.
b. Grantee shall ensure all representations and warranties provided herein are true, accurate, and complete as of the date of the Effective Date and shall remain so throughout the Term of this Agreement. Grantee is responsible for promptly notifying the Department in writing of any changes or inaccuracies in the representations and warranties contained herein.

B. Grantee hereby represents and warrants the following:

a. Grantee has taken all necessary steps to attain the legal authority to receive and expend the Project's funds.
b. Grantee has duly authorized this Agreement, and the person executing it has authority to do so. Once executed by Grantee, this Agreement shall constitute a binding obligation of Grantee, enforceable according to its terms.
c. Grantee's obligations hereunder do not conflict with any law, ordinance, or resolution applicable to Grantee, Grantee's charter (if applicable), or any judgment or decree to which Grantee is subject.
d. Grantee has independently confirmed that the Project Description, including, but not limited to, the Appropriated Amount and Reversion Date, is consistent with the underlying appropriation in law.
e. Grantee's governing body has duly adopted or passed as an official act a resolution, motion, or similar action authorizing the person identified as the official representative of the Grantee to sign and submit Requests for Payment on behalf of Grantee.
f. Grantee will abide by New Mexico laws regarding conflicts of interest, governmental conduct, and whistleblower protection.
    i. Grantee agrees explicitly none of its officers or employees or its designees or agents, no member of the governing body, and no other public official of Grantee who exercises any function or responsibility with respect to this Agreement, shall have any interest, direct or indirect, in any contract or subcontract, or the proceeds thereof, for the Project.
    ii. Further, Grantee will require all of its contractors to incorporate the language set forth in this paragraph prohibiting conflicts of interest in all subcontracts.
g. No funds have been paid or will be paid, by or on behalf of the Grantee, to any person for influencing or attempting to influence an officer or employee of the State, any agency, or body in connection with the awarding of any Third Party Obligation.
    i. Grantee will require certifying language prohibiting lobbying to be included in the award documents for all subawards, including subcontracts, loans, and cooperative agreements.

C. Consequences of False or Misleading Representations. If any representation or warranty made by Grantee is found to be false or misleading, the Department shall have the right to exercise any or all of the following remedies:

a. **Termination of Agreement:** Department may terminate this Agreement immediately upon written notice to the Grantee.
b. **Repayment of Grant Funds:** Grantee shall repay all Appropriated Amounts disbursed under this Agreement, upon demand by the Department.
c. **Other Remedies:** Department may pursue any other remedies available at law or in equity.

D. Survival of Representations and Warranties. The representations and warranties made by the Grantee shall survive the Early Termination or expiration of this Agreement.

XII. PROJECT RECORDS

A. Grantee shall be strictly accountable for receipts and disbursements relating to the Project's funds. The Grantee shall follow generally accepted accounting principles and the State's Model Accounting Practices and, if feasible, maintain a separate bank account or fund with a separate organizational code to ensure separate budgeting and accounting of the funds.

B. For six (6) years following the Project's completion ("**Record Retention Period**"), Grantee shall maintain all Project-related records, including, but not limited to, all financial records, requests for proposals, invitations to bid, selection and award criteria, contracts and subcontracts, advertisements, minutes of pertinent meetings, as well as records sufficient to fully account for the amount and disposition of the Appropriated Amount from all sources budgeted for the Project, the purpose for which such funds were used, and such other records as the Department may prescribe.

C. Grantee shall make all Project records available to the Department, the Department's Independent Public Accountant, and the New Mexico State Auditor upon request. With respect to the funds that are the subject of this Agreement, if the State Auditor or the Department finds any funds were improperly expended, Grantee shall be required to reimburse the State all amounts found to be improperly expended.

XIII. IMPROPERLY REIMBURSED FUNDS

If the Department determines part or all of the Appropriation Amount was improperly reimbursed to Grantee, including but not limited to funds reimbursed to Grantee based upon fraud, mismanagement, misrepresentation, misuse, violation of law by the Grantee, after ten (10) days' notice to Grantee and the opportunity to return such funds to the Department, the Department may offset any funds due to Grantee from the State, until the Appropriation Amount is fully repaid.

XIV. LIABILITY

Neither Party shall be responsible for liability incurred as a result of the other Party's acts or omissions in connection with this Agreement. Any liability incurred in connection with this Agreement is subject to immunities and limitations of the New Mexico Tort Claims Act.

XV. SCOPE OF AGREEMENT

This Agreement constitutes the entire and exclusive agreement between the Parties concerning the subject matter hereof. The Agreement supersedes all prior or contemporaneous agreements, understandings, discussions, communications, and representations, written or verbal.

XVI. REQUIRED NON-APPROPRIATIONS CLAUSE

A. Grantee acknowledges and agrees to include a "non-appropriations" clause in all contracts between it and other parties that are (i) funded in whole or part by funds made available under this Agreement and (ii) entered into after the effective date of this Agreement that states:

   a. "The terms of this Agreement are contingent upon sufficient appropriations and authorization being made by the Legislature of the State of New Mexico ("**Legislature**") for the performance of this Agreement.
   b. If the Legislature does not make sufficient appropriations and authorization, City of Santa Fe may immediately terminate this Agreement by giving Contractor written notice of such termination.
   c. The City of Santa Fe's decision as to whether sufficient appropriations are available shall be final and accepted by the Contractor. Contractor hereby waives any rights to assert an impairment of contract claim against the City of Santa Fe or the State of New Mexico in the event of immediate or Early Termination of this Agreement by the City of Santa Fe or the State Department of Finance and Administration."

XVII. REQUIRED TERMINATION CLAUSE

A. Grantee acknowledges and agrees to include the following termination clause in all contracts that are (i) funded in whole or part by funds made available under this Agreement and (ii) entered into after the effective date of this Agreement:

   a. "This contract is funded in whole or in part by funds made available by the State of New Mexico ("**State**"). Should the State terminate its Agreement with the City of Santa Fe, the City of Santa Fe may terminate this contract immediately by providing Contractor written notice of such termination.
   b. In the event of termination pursuant to this paragraph, the City of Santa Fe's only liability to Contractor shall be for goods and services delivered and accepted prior to the termination date."

XVIII. COMPLIANCE WITH UNIFORM FUNDING CRITERIA

A. Throughout the term of this Agreement, Grantee shall:

a. Submit all reports of annual audits and agreed-upon procedures required by § 12-6-3(A)-(B), NMSA 1978 by the due dates established in § 2.2.2 NMAC, reports of which must be a public record pursuant to § 12-6-5(A), NMSA 1978 within forty-five (45) days of delivery to the State Auditor;
b. Have a duly adopted budget for the current fiscal year approved by its budgetary oversight agency (if any);
c. Timely submit all required financial reports to its budgetary oversight agency (if any); and
d. Use accounting methods and procedures consistent with Generally Accepted Accounting Principles and the State's Model Accounting Principals to expend the Appropriated Amount in accordance with applicable law and account for and safeguard Project funds and assets acquired with Project funds.

B. In the event Grantee fails to comply with the requirements of subparagraph A of this Article XVIII, Department may take one or more of the following actions:

a. Suspend new or further obligations pursuant to Article VI(A) of this Agreement;
b. Require the Grantee to develop and implement a written corrective action plan pursuant to Article VI(D) of this Agreement to remedy the non-compliance;
c. Impose special conditions to address the non-compliance by giving Grantee notice of such special conditions in accordance with Article III of this Agreement;
    i. The Parties agree that any special conditions imposed to address non-compliance shall be incorporated into this Agreement, through **Exhibit C**, upon notice to Grantee, without need for formal amendment of this Agreement;
    ii. Special conditions shall be binding and effective on the date that notice is deemed to have been given pursuant to Article III or
d. Terminate this Agreement pursuant to Article V(A) of this Agreement.

XIX. SEVERANCE TAX AND GENERAL OBLIGATION BONDS

A. Grantee acknowledges and agrees that the underlying appropriation for the Project may originate from the issuance of tax-exempt severance tax bonds or general obligation bonds by the State. Proceeds from such bonds are administered by the New Mexico State Board of Finance ("**SBOF**"), an entity separate and distinct from the Department.

a. Grantee acknowledges and agrees:
    i. It is Grantee's responsibility to determine through SBOF what (if any) conditions are currently imposed on the Project;
    ii. Department's failure to inform Grantee of an SBOF-imposed condition does not affect the validity or enforceability of the condition;
    iii. The SBOF may in the future impose further or different conditions upon the Project;
    iv. All SBOF conditions are attached to the Project and Appropriation Amount without the need for formal amendment of this Agreement;
    v. All applicable SBOF conditions must be satisfied before the SBOF will release to the Department funds subject to the condition(s) and
    vi. The Department's obligation to reimburse Grantee from the Project is expressly contingent upon the satisfaction of the then-current SBOF conditions.

B. Grantee acknowledges and agrees SBOF may, at its sole and absolute discretion, require reimbursement or remove eligibility for bond proceeds for the Project if the Project doesn't proceed sufficiently.

   a. Grantee must comply with the requirement to encumber five percent (5%) of Project funds within six months of bond issuance as certified by Grantee in the Bond Questionnaire and Certification documents submitted to the SBOF.
   b. Failure to comply may result in the reassignment of the bond proceeds. Upon reassignment of bond proceeds, this Agreement will be suspended until the entity has demonstrated readiness as determined by the SBOF and the Department.

C. Grantee acknowledges and agrees that this Agreement is subject to the SBOF's Bond Project Disbursements rule, § 2.61.6, NMAC, as may be amended from time to time or re-codified.

XX. GENERAL PROVISIONS

A. Assignment: Grantee's rights and obligations under this Agreement are personal and may not be transferred or assigned without the prior written consent of the State. Any attempt at assignment or transfer without such consent shall be void. Any assignment or transfer of Grantee's rights and obligations approved by the State shall be subject to the provisions of this Agreement.

B. Subcontractors: Grantee shall not enter any subgrant or subcontract in connection with its obligations under this Agreement without the prior written approval of the State. Upon request, Grantee shall submit to the Department a copy of each such subgrant or subcontract.

C. Binding Effect: Except as otherwise provided, all provisions of this Agreement, including the benefits and burdens, shall extend to and be binding upon the Parties' respective successors and assigns.

D. Authority: Each Party represents and warrants to the other that the execution and delivery of this Agreement and the performance of such Party's obligations have been duly authorized.

E. Captions and References: The captions and headings in this Agreement are for the convenience of reference only and shall not be used to interpret, define, or limit its provisions. All references in this Agreement to sections (whether spelled out or using the § symbol), subsections, exhibits, or other attachments are references to sections, subsections, exhibits, or other attachments contained herein or incorporated as a part hereof, unless otherwise noted.

F. Counterparts: This Agreement may be executed in multiple, identical, original counterparts, each of which shall be deemed to be an original, but all of which, taken together, shall constitute the same agreement.

G. Digital Signatures: If any signatory signs this agreement using a digital signature in accordance with the State Policies regarding the use of digital signatures, then any agreement or consent to use digital signatures within the electronic system through which that signatory signed shall be incorporated into this Agreement by reference.

H. Modification: Except as otherwise provided in this Agreement, any modification to this Agreement shall only be effective if agreed to in a formal amendment, properly executed and

approved in accordance with applicable New Mexico law and State fiscal policies and rules. Modifications permitted under this Agreement, other than Agreement amendments, shall conform to the policies issued by the State.

I. Statutes, Regulations, Fiscal Rules, and Other Authority: Any reference in this Agreement to a statute, regulation, policy, or other authority shall be interpreted to refer to such authority then current, as may have been changed or amended after the Effective Date of this Agreement.

J. External Terms and Conditions: Notwithstanding anything to the contrary herein, the State shall not be subject to any provision included in any terms, conditions, or agreements appearing on Grantee's or a subcontractor's website or any provision incorporated into any click-through or online agreements related to the Work unless that provision is specifically referenced in this Agreement.

K. Severability: The invalidity or unenforceability of any provision of this Agreement shall not affect the validity or enforceability of any other provision of this Agreement, which shall remain in full force and effect, provided that the Parties can continue to perform their obligations under this Agreement in accordance with its intent.

L. Survival of Certain Agreement Terms: Any provision of this Agreement that imposes an obligation on a Party after the termination or expiration of this Agreement shall survive the termination or expiration of this Agreement and shall be enforceable by the other Party.

M. Third Party Beneficiaries: Except for the Parties' respective successors and assigns described in this Agreement, it does not and is not intended to confer any rights or remedies upon any person or entity other than the Parties. Enforcement of this Agreement and all rights and obligations hereunder are reserved solely to the Parties. Any services or benefits that third parties receive as a result of this Agreement are incidental to this Agreement and do not create any rights for such third parties.

N. Waiver: A Party's failure or delay in exercising any right, power, or privilege under this Agreement, whether explicit or by lack of enforcement, shall not operate as a waiver, nor shall any single or partial exercise of any right, power, or privilege preclude any other or further exercise of such right, power, or privilege.

O. Standard and Manner of Performance: Grantee shall perform its obligations under this Agreement in accordance with the highest standards of care, skill, and diligence in Grantee's industry, trade, or profession.

P. Licenses, Permits, and Other Authorizations: Grantee shall secure, prior to the Effective Date, and maintain at all times during the term of this Agreement, at its sole expense, all licenses, certifications, permits, and other authorizations required to perform its obligations under this Agreement and shall ensure that all employees, agents, and subcontractors secure and maintain at all times during the term of their employment, agency or subcontractor, all license, certifications, permits and other authorizations required to perform their obligations in relation to this Agreement.

Q. Publicity: Any Publicity regarding the subject matter of this Agreement may not be released without prior written approval from the Department. For purposes of this agreement, "**Publicity**" means notices, informational pamphlets, press releases, email responses, research, reports, signs, and similar public notices prepared by or for the Grantee or jointly with others.

a. Grantee shall obtain written approval prior to issuing any press release or making any public announcement regarding this agreement. Grantee agrees to obtain approval of the Department in advance with respect to all Public Relations, all communications with media, or all communications with any other member of the public with respect to this agreement, except to acknowledge that an agreement does exist.
b. For purposes of this agreement, "Public Relations" includes community relations and means those activities dedicated to maintaining the Department's image or maintaining or promoting understanding and favorable relations with the community or public at large or any segment of the public.
c. Violations of either Article XX (Q)(a) or (b) shall constitute a material Breach of Agreement.

R. Data Sharing: The State intends to secure and collate specific data generated by Grantee under this Agreement to use in support of the State's organizational, policy-making, and management of public resource functions. State, in accordance with **Exhibit E**, attached hereto and incorporated herein by reference, reserves the right to require Grantee and/or its subcontractors to provide specific data relevant to the above-listed functions. Data provided by Grantee may be incorporated into existing or future developed State integrated analysis tools or databases, including but not limited to geographic information system (GIS) networks and databases accessible by the public. Dissemination of data collected may include historical data and projections based on such historical data.

a. To the extent any data transferred as part of this Agreement is legally determined to be the property of Subrecipient or its subcontractors, Subrecipient and/or its subcontractors grants State a nonexclusive, fully paid-up right and license to reproduce, use, distribute, do derivative works based on, and archive data transferred as part of this Agreement.

S. Venue and Choice of Law: This Agreement shall be governed by and construed in accordance with the laws of the State of New Mexico, without regard to any conflict of law provisions. Any legal suit, action, or proceeding arising out of or related to this Agreement shall be instituted exclusively in the district courts located in Santa Fe, New Mexico. The Parties hereby irrevocably submit to the exclusive jurisdiction and venue of such courts in any such suit, action, or proceeding. The Parties waive any objection to the laying of the venue of any such suit, action, or proceeding in the district courts of Santa Fe, New Mexico, and irrevocably waive and agree not to plead or claim in any such court that any such suit, action, or proceeding brought in any such court has been brought in an inconvenient forum.

[SIGNATURE PAGE AND EXHIBITS FOLLOW]
[THIS SPACE LEFT BLANK INTENTIONALLY]

IN WITNESS WHEREOF, the parties have duly executed this Agreement as of the Department's date of execution.

APPROVED BY DEPARTMENT:

Cabinet Secretary, Wayne Propst:

_____ _____

Signature Date

Chief Financial Officer, Mackie Romero:

_____ _____

Signature Date

Local Government Division Director, Cecilia Mavrommatis:

_____ _____

Signature Date

AS TO LEGAL FORM AND SUFFICIENCY

General Counsel's Office:

_____

Signature

_____ _____

(Print Name) (Title)

APPROVED BY GRANTEE:

Entity Name

Official with Authority to Bind Grantee:

Signature

(Print Name) (Title)

Date

ATTEST:

Signature

(Title)

(Print Name)

Date

Fiscal Officer or Chief Financial Officer:

Emily K. Oster

Signature

(Print Name) (Title)

Date

As To Legal Form And Sufficiency

Kevin L. Nault

Kevin L. Nault (Oct 3, 2025 08:43:02 MDT)

Signature

Kevin L. Nault Assistant City Attorney

(Print Name) (Title)

Oct 3, 2025

Date

EXHIBIT A

Request for Payment Form and Certification

STATE OF NEW MEXICO
GRANT APPROPRIATION
Request for Payment Form
Exhibit A

I. Grantee Information (Must match your DFA Substitute W-9 Form)

A. Grantee: _____
B. Address: _____
(Complete Mailing, including Suite, if applicable)
_____
City, State, Zip
C. Contact Name/Phone #: _____
D. Grant No: _____
E. Project Title: _____
F. Grant Expiration Date: _____

II. Payment Computation

A.	Payment Request No.	
B.	Grant Amount:	$ 0.00
C.	AIPP Amount *(If Applicable)*:	$ 0.00
D.	Funds Requested to Date:	$ 0.00
E.	Amount Requested this Payment:	
F.	Reversion Amount *(if applicable)*:	$ 0.00
G.	Grant Balance:	$ 0.00

H. ☐ Final Request for Payment *(if applicable)*

III. Fiscal Year : 2026 (July 1, 2025-June 30, 2026)

(The State of NM Fiscal Year is July 1, 20XX through June 30, 20XX of the following year)

IV. Certifications

☐ I hereby certify that all conditions and requirements for Payments outlined in the Agreement have been met, including but not limited to:
a. Submission and approval of a Project Budget as per Article IV, Section A of the Agreement.
b. Compliance with the Project Budget and expenditure of funds in accordance with the State Procurement Code and the State's Model Accounting Practices.
c. Submission of supporting documentation as required by the Agreement.
d. Maintenance of all necessary records and documentation as stipulated in the Agreement.

☐ I attest that the information provided is correct; expenditures are properly documented and valid or actual receipts, and that the activity fully complies with Article IX, Sec. 14 of the New Mexico Constitution, known as the "anti-donation" clause.

☐ I hereby certify that all representations and warranties made in the Agreement remain true, accurate, and complete as of the date of this request, and will continue to be so throughout the term of the Agreement. I acknowledge that these representations and warranties are a material inducement for the Department to approve this pay request.

Emily K. Oster

Grantee Fiscal Officer or **Fiscal Agent** *(if applicable)*

Printed Name

Date: _____

Grantee Representative

Printed Name

Date: _____

(State Agency Use Only)

Vendor Code: _____ Fund No.: _____ PO # _____ Loc No.: _____

I certify that the State Agency financial and vendor file information agree with the above submitted information.

ASD Officer Date

Division Grant Manager Date

Revised 7/2025

[THIS SPACE LEFT BLANK INTENTIONALLY]

EXHIBIT B

Notice of Department's Obligation Form

NOTICE OF OBLIGATION TO REIMBURSE GRANTEE
EXHIBIT B

Notice of Obligation to Reimburse Grantee # _____

DATE: _____

TO: Department Representative: _____, Grant Manager

FROM: Grantee Entity: _____

Grantee Official Representative: _____

SUBJECT: Notice of Obligation to Reimburse Grantee

Grant Number: _____

Grant Termination Date: _____

As the designated representative of the Department for Grant Agreement number _____ entered into between Grantee and the Department, I certify that the Grantee has submitted to the Department the following third party obligation executed, in writing, by the third party's authorized representative:

Vendor or Contractor: _____

Third Party Obligation Amount: _____

Vendor or Contractor: _____

Third Party Obligation Amount: _____

I certify that the State is issuing this Notice of Obligation to Reimburse Grantee for permissible purposes within the scope of the project description, subject to all the terms and conditions of the above referenced Grant Agreement.

Grant Amount (Minus AIPP if applicable): _____

The Amount of this Notice of Obligation: _____

The Total Amount of all Previously Issued Notices of Obligation: _____

The Total Amount of all Notices of Obligation to Date: $ 0.00

Note: Contract amounts may exceed the total grant amount, but the invoices paid by the grant will not exceed the grant amount.

Department Rep. Approver: _____

Title: Grant Manager

Signature: _____

Date: _____

1 Administrative and/or Indirect Cost – generally, the legislation authorizing the issuance of bonds prohibits the use of its proceeds for indirect expenses (e.g. penalty fees or damages other than pay for work performed, attorney fees, and administrative fees). Such use of bond proceeds shall not be allowed unless specifically authorized by statute.

Revised 7/2025

[THIS SPACE LEFT BLANK INTENTIONALLY]

OPTIONAL EXHIBIT C
SPECIAL CONDITIONS

The capital outlay oversight requires grantees' accounting methods and procedures, including their internal control framework, to be scrutinized, so as to safeguard State capital outlay appropriations and assets acquired with such appropriations.

This Capital Outlay Special Grant Condition(s) **Exhibit C** is necessary pursuant to § 6-3b-1 et seq., NMSA 1978 (Public Finance Accountability Act) and MAPS Fin 9.2, due to the Grantees' material weaknesses, significant deficiencies, or findings that raised concerns as to the ability to expend grant funds in accordance with applicable law in the organization's FY[20XX] audit. The Special Conditions identified below apply to the authorized agent, [insert the Grantee or Fiscal Agent name].

Procurement - All purchases or contracts the Grantee enters that shall use funding from the Department capital appropriations grant must be approved by the Department prior to the initiation of implementing purchasing documents. The Grantee shall receive such prior approval via official correspondence from the Department, which may be through letter or email. The Grantee shall submit the following to the Department in pursuit of prior approval: purchasing policies and procedures, CFO certification, documentation of management and program approval, policies and procedures governing purchasing and contracting, a copy of the current procurement and contracting policies, and documentation regarding informing staff responsible for purchasing and contracting on such policies and procedures.

Budget - Provide documentation of approval of your current budget from DFA Local Government or other authoritative agency. Provide policies and procedures on who is responsible for and how annual budgets (expenditures and revenue) are established, monitored and adjusted. Provide a corrective action plan on how budget issues identified in your audit will be/have been addressed. Also include documentation on how staff responsible for budgeting is informed on budget policies and procedures.

Capital Assets - Provide a complete list of inventory including inventory control numbers and current location. Provide policies and procedures on capital assets and inventory and specify how the proposed purchased items will be included, tagged, and tracked in capital asset inventory. Also include documentation on how staff responsible for capital assets is informed on capital asset policies and procedures.

Travel and Per Diem - Provide policies and procedures on travel and per diem. Also include how staff who travel and those responsible for travel reimbursement are informed on travel and per diem policies and procedures.

Timely Audits – Provide policies and procedures on annual audits. Provide documentation on how and who is responsible for insuring that annual audits are completed timely. Also include documentation on how staff responsible for the annual audit is informed on audit policies and procedures.

Cash Management – policies and procedures on cash management of federal funds. Provide procedures used to draw and disburse federal funds. Provide procedures to reconcile draw amounts, deposits and disbursements; and to prepare federal cash reporting documents to ensure compliance with federal regulations.

The <Grantee> was required to, and has provided sufficient documentation regarding [insert specific names of the Special Condition(s)], as referenced in the <Grantee>'s [20XX] Audit file. Therefore, the criteria to enter into this agreement have been met.

[THIS SPACE LEFT BLANK INTENTIONALLY]

EXHIBIT D

Project Budget Worksheet *

*(Provided separately when grant agreement issued to Grantee)

[THIS SPACE LEFT BLANK INTENTIONALLY]

Exhibit E

Data Sharing Provisions for New Mexico Capital Outlay Agreements

I. Introduction:

This Data Sharing Provisions Exhibit ("Exhibit") is incorporated into the New Mexico Capital Outlay Agreements ("Agreements") between the State of New Mexico ("State") and [Insert Partner Name] ("Partner"). This Exhibit outlines the terms and conditions under which data will be shared between the Parties to ensure compliance with New Mexico state laws and regulations, focusing on data privacy, security, and compliance.

II. Definitions:

a. Authorized User: An employee, agent, assign, representative, independent contractor, or other person or entity authorized by Partner or State to access, use, or disclose information through this exhibit.

b. Confidential Information: All data or information shared in confidence, with the expectation that it will not be disclosed in an identifiable form. This includes data that is exempt from public disclosure under the New Mexico Inspection of Public Records Act (§ 14-2-1 et seq. NMSA 1978) or other relevant laws.

c. Data Storage: Electronic media that hold recorded information.

d. Data Transmission: The process of moving information over a network from its source to one or more destinations.

e. Direct Identifier: Records or data containing personal identifiers such as names, addresses, and social security numbers.

f. Disclosure: Permission to access, release, transfer, or otherwise communicate confidential information by any means to any third party, except as authorized by the Party that controls the record.

g. Encryption involves using algorithms to encode data, rendering it unreadable without a specific key. It may be necessary during data transmission and/or storage.

h. Information: Any data, figures, statistics, or other facts provided or learned about someone or something, including Confidential Information, that may be legally transmitted under this Exhibit.

i. Limited Dataset: A data file that omits Direct Identifiers.

j. Protected Personally Identifiable Information: Sensitive personal details such as social security numbers and financial account numbers, with specific exclusions as outlined in the Agreements.

III. Purpose:

The purpose of this exhibit is to promote transparency, facilitate information sharing between the parties, support better policy and decision-making, and enhance public services through collaborative

[THIS SPACE LEFT BLANK INTENTIONALLY]

data analysis from various sources.

IV. Use of Information:

a. Use of Information obtained or created under this exhibit shall be strictly limited to the purposes stated herein and in the agreements. The parties agree not to sell Information to third parties or use it for commercial, solicitation, or political purposes.

b. Each Party shall serve as the custodian of the Information and comply with all conditions for its use, including security measures to prevent unauthorized access.

c. The Parties shall follow all relevant federal and state laws and regulations governing the use of such Information.

V. Safeguarding Information:

a. Confidentiality: Access to Confidential Information shall be limited to the minimum necessary to accomplish the purposes of this Exhibit. Authorized Users must adhere to the confidentiality requirements.

b. Security: Security practices shall comply with the requirements of the New Mexico Department of Information Technology Act and related regulations. The Parties agree to notify each other within three business days of any suspected or actual security breach.

c. Information Storage and Transmission: Data Storage and Transmission shall take place on an encrypted server with appropriate security controls.

VI. Re-Disclosure of Information:

The Parties agree not to disclose Information except as required by law or with prior written approval of the other Party. If there is a public records request, the Party receiving it shall notify the other Party within three business days.

VII. Ownership of Information:

Legal title to Information shall remain with the provider. The Partner grants the State a royalty-free, non-exclusive, non-transferable license to use the Information in furtherance of the purposes outlined in this Exhibit.

City of Santa Fe New Mexico

Finance Department

Project Ledger Request Form

Date of Request: 10/28/2025

Project Title: SS Teen Center Improvements

Project Type: ☑ CIP ☑ Grant ☐ Internal Tracking

Project ID: FA183200T

Grant ID: S2627

Approved By: ERIKA LUJAN (Oct 29, 2025 09:44:34 MDT)

CMT (Finance Use Only)

Department: Public Works Project Manager: Sam Burnett/Maria Tucker Ext: 5933

Project Date Range: 10/28/2025 to 6/30/2~~026~~ 2027 ☐ Create Fixed Asset

---

☐ Multi-Funding (complete all funding sources, should equal 100%)

Funding Source: NMDFA 21-F2901 reauth time ext % of Funding: 100

MUNIS ORG: 3209980 MUNIS OBJ: 490210 Awarded Amount: $1,764,579.06

Funding Source: _____ % of Funding: _____

MUNIS ORG: _____ MUNIS OBJ: _____ Awarded Amount: _____

Expense String Phase:

A project must have at least one phase identified, this can be used as an additional level of tracking, for example, CIP - Design, Construction, etc. For Grants can be used as reimbursable types, such as transportation, salaries.

(You can create more than one phase and you can default MUNIS ORGs and OBJs, optional)

Phase: Construction MUNIS ORG: 3209980 MUNIS OBJ: 572970

Grants Only (list all grants if applicable): REAUTHORIZATION OF 21F2901

Grantor Name: NMDFA CAP# 25-J4371 SS TEEN CTR Awarded Amount: 1,764,579.06

AR Charge Code: 3209980.490210 ☐ Grant funds multiple projects (Complete a form for each project)

Grantor Id: 700007 Federal CFDA (if applicable): N/A

Grantor Name: _____ Awarded Amount: _____

AR Charge Code: _____ ☐ Grant funds multiple projects (Complete a form for each project)

Grantor Id: _____ Federal CFDA (if applicable): _____

(If grants please provide all grant award documents with form) ☑ Attached Grant Documentation

GB Packet_Grant 25-J4371 Teen Center - Reauth 21-F2901

Final Audit Report 2025-12-10

Created:	2025-12-08
By:	Elizabeth Kahahane (elkahahane@santafenm.gov)
Status:	Signed
Transaction ID:	CBJCHBCAABAAZ5iS-1Nn1E5JxsFhv4EWhjI0R0YUhyaG

"GB Packet_Grant 25-J4371 Teen Center - Reauth 21-F2901" History

Document created by Elizabeth Kahahane (elkahahane@santafenm.gov)
2025-12-08 - 9:31:02 PM GMT- IP address: 63.232.20.2

Document emailed to Jacob Martinez (jemartinez@santafenm.gov) for signature
2025-12-08 - 9:33:52 PM GMT

Email viewed by Jacob Martinez (jemartinez@santafenm.gov)
2025-12-08 - 9:54:44 PM GMT- IP address: 104.47.64.254

Document e-signed by Jacob Martinez (jemartinez@santafenm.gov)
Signature Date: 2025-12-08 - 9:55:51 PM GMT - Time Source: server- IP address: 63.232.20.2

Document emailed to Timothy Farrell (tgfarrell@santafenm.gov) for signature
2025-12-08 - 9:55:53 PM GMT

Email viewed by Timothy Farrell (tgfarrell@santafenm.gov)
2025-12-08 - 10:24:57 PM GMT- IP address: 104.47.64.254

Document e-signed by Timothy Farrell (tgfarrell@santafenm.gov)
Signature Date: 2025-12-08 - 10:25:12 PM GMT - Time Source: server- IP address: 63.232.20.2

Document emailed to Maria Tucker (metucker@santafenm.gov) for signature
2025-12-08 - 10:25:14 PM GMT

Email viewed by Maria Tucker (metucker@santafenm.gov)
2025-12-08 - 10:28:00 PM GMT- IP address: 172.59.3.12

Email viewed by Maria Tucker (metucker@santafenm.gov)
2025-12-10 - 10:43:48 PM GMT- IP address: 172.59.3.99

Powered by Adobe Acrobat Sign

Document e-signed by Maria Tucker (metucker@santafenm.gov)

Signature Date: 2025-12-10 - 10:44:27 PM GMT - Time Source: server- IP address: 172.59.3.99

Document emailed to JOHN BURNETT (jsburnett@santafenm.gov) for signature

2025-12-10 - 10:44:29 PM GMT

Email viewed by JOHN BURNETT (jsburnett@santafenm.gov)

2025-12-10 - 11:15:54 PM GMT- IP address: 174.240.17.157

Document e-signed by JOHN BURNETT (jsburnett@santafenm.gov)

Signature Date: 2025-12-10 - 11:24:19 PM GMT - Time Source: server- IP address: 174.240.17.157

Agreement completed.

2025-12-10 - 11:24:19 PM GMT

GB Packet_Grant 25-J4371 Teen Center - Reauth 21-F2901 - for GRANTS sigs

Final Audit Report 2025-12-22

Created:	2025-12-17
By:	Elizabeth Kahahane (elkahahane@santafenm.gov)
Status:	Signed
Transaction ID:	CBJCHBCAABAAwOh-A7Rd5YH2z0XDBz12OJLEWDuQBC3W

"GB Packet_Grant 25-J4371 Teen Center - Reauth 21-F2901 - for GRANTS sigs" History

Document created by Elizabeth Kahahane (elkahahane@santafenm.gov)
2025-12-17 - 7:55:11 PM GMT- IP address: 63.232.20.2

Document emailed to ajhopkins@santafenm.gov ajhopkins@santafenm.gov (ajhopkins@santafenm.gov) for signature
2025-12-17 - 8:20:04 PM GMT

Email viewed by ajhopkins@santafenm.gov ajhopkins@santafenm.gov (ajhopkins@santafenm.gov)
2025-12-17 - 9:19:12 PM GMT- IP address: 104.47.64.254

Document e-signed by ajhopkins@santafenm.gov ajhopkins@santafenm.gov (ajhopkins@santafenm.gov)
Signature Date: 2025-12-17 - 9:19:51 PM GMT - Time Source: server- IP address: 63.232.20.2

Document emailed to ERIKA LUJAN (evlujan@santafenm.gov) for signature
2025-12-17 - 9:19:54 PM GMT

Email viewed by ERIKA LUJAN (evlujan@santafenm.gov)
2025-12-17 - 11:23:03 PM GMT- IP address: 104.47.64.254

Document e-signed by ERIKA LUJAN (evlujan@santafenm.gov)
Signature Date: 2025-12-17 - 11:23:46 PM GMT - Time Source: server- IP address: 63.232.20.2

Document emailed to EMILY OSTER (ekoster@santafenm.gov) for signature
2025-12-17 - 11:23:49 PM GMT

Email viewed by EMILY OSTER (ekoster@santafenm.gov)
2025-12-22 - 12:48:40 PM GMT- IP address: 174.211.229.20

Document e-signed by EMILY OSTER (ekoster@santafenm.gov)

Signature Date: 2025-12-22 - 1:49:51 PM GMT - Time Source: server- IP address: 174.211.229.20

Agreement completed.

2025-12-22 - 1:49:51 PM GMT

Powered by
Adobe
Acrobat Sign

CITY OF SANTA FE

Date: December 3, 2025

To: Governing Body

From: Caryn Grosse, PMP, Public Works Project Manager III

Via: Sam Burnett, Interim Public Works Department Director JOHN BURNETT (Dec 8, 2025 07:29:59 MST)
Tim Farrell, Interim Facilities Division Director Timothy Farrell

Subject: On-Call Price Agreement for City-Wide Miscellaneous Construction Services

Vendor Name: Davenport Construction Management LLC

Vendor Number: 8997

ACTION:
Request for Approval of an On-Call Price Agreement with Davenport Construction Management LLC in the Total Amount of $10,000,000 Including NMGRT for City-Wide Miscellaneous Construction Services for a Term of 10 Years. (Caryn Grosse, Public Works Project Manager III, clgrosse@santafenm.gov)

CONTRACT NUMBER:
The FY26 Munis Contract Number is 3260205.

BACKGROUND AND SUMMARY:
The Public Works Department Facilities Division uses on-call services to augment the skills, licensure, and capacity of staff to address facility issues and emergencies in a timely, safe, and compliant manner. The Facilities Division typically maintains on-call contracts for general contracting, mechanical, electrical, plumbing, roofing, remediation, and landscaping services.

In accordance with the Invitation to Bid (ITB No. 25163) for On-Call City-Wide Miscellaneous Construction Services, multiple responsive vendors were selected for contracts based on lowest bidder and performance criteria: AnchorBuilt Inc., B&D Industries Inc., Davenport Construction Management LLC, Enviroworks LLC, JDR & Associates, LLR Construction LLC, and Unified Contractor, Inc. Davenport Construction has provided services throughout the City and has proven to be cost-effective, reliable, and capable of consistently providing high quality results.

On-call contracts are not a guarantee of payment. These contracts are only used, and purchase orders issued, as needs arise and funding is available. The $10,000,000 (including 8.1875% NMGRT) maximum for this contract is based on the historical and anticipated needs across the City over the next ten years.

ATTACHMENTS:
On-Call Price Agreement for Construction Services
Proposal – Exhibit A
Certificate of Insurance
CPO Determination
Horizons Service List

PROCUREMENT METHOD:
The procurement method for this contract is the Invitation to Bid No. 25163, dated April 24, 2025.

Chief Procurement Officer (CPO)/Designee: JoAnn Lovato Montaño Date: 12/23/2025
CPO Comment/Exceptions: _____

FUNDING SOURCE:
Funding will be provided on a project-by-project basis.
Fund Name/Number: Various
Munis Org Name/Number: Various
Munis Object Name/Number: Various

Budget Officer/Designee: Andy Hopkins Date: 12/19/2025
Budget Officer Comment/Exceptions: _____

ASSOCIATED APPROVALS:
IT Components included? ☐ Yes | ☒ No
Approval: _____ Title: _____ Date: _____
Comment/Exceptions: _____

Treasury/Point of Sale Components included? ☐ Yes | ☒ No
Approval: _____ Title: _____ Date: _____
Comment/Exceptions: _____

Vehicles included? ☐ Yes | ☒ No
Approval: _____ Title: _____ Date: _____
Comment/Exceptions: _____

Construction to City Facilities, Furniture, and/or Fixtures, included? ☒ Yes | ☐ No
Approval: _____ Title: _____ Date: _____
Comment/Exceptions: Timothy Farrell

Is this an externally funded purchase? ☐ Yes | ☒ No
If yes, what is the issuing agency: _____
Approval: _____ Title: _____ Date: _____
Comment/Exceptions: _____

Capital Asset or Project? ☐ Yes | ☒ No
Project Ledger Number _____
Approval: _____ Title: _____ Date: _____
Comment/Exceptions: _____

Item #: _____
Munis Contract #: 3260205
ITB No.: 25163

CITY OF SANTA FE

ON-CALL PRICE AGREEMENT

CONSTRUCTION CONTRACT

City-Wide Miscellaneous Construction Services

THIS CONTRACT is made and entered into by and between the City of Santa Fe, New Mexico, hereinafter referred to as the "City," and **Davenport Construction Management LLC**, hereinafter referred to as the "Contractor," and is effective as of the date set forth below upon which it is executed by the Parties.

RECITALS

WHEREAS, the City, through its Governing Body, is authorized to enter into an On-Call Price Agreement for the project; and

WHEREAS, the City has procured this Contract according to the established State and Local Purchasing procedures for contracts of the type and amount; and

The City and the Contractor hereby agree as follows:

1. Scope of Work

A. The Contractor shall perform the following work in accordance with their Bid Pricing, attached hereto and made a part thereof, as Exhibit A:

1. This work shall include Miscellaneous General Contracting work for the City of Santa Fe.

2. The Contractor shall be required to provide On-Call Miscellaneous Construction Services for any number of the activities listed under this Scope of Work upon the request of the City. Once a need is identified, the City's Engineers, Project Managers, and Project Administrators (collectively "Project Manager") may issue Task Orders for items described herein. The terms and conditions shall be incorporated in each Task Order issued hereunder. Once a need is identified, the Project Manager will issue a written Task Order to the Contractor detailing the services required. Upon receiving the Task Order, the Contractor shall promptly provide the Project Manager with an estimate, based upon the rates included in their ITB, a cost summary, and a proposed schedule required to complete the assignment or task. Project schedules, negotiated price, and completion dates shall be determined on project-by-project basis and dependent upon the urgency of that task. The

Contractor may be required to do some of the work in phases. The City's Project Manager may issue a Notice to Proceed by signing the Notice after the task price and schedule are finalized by the Contractor, subject to the exception in Article 1(A)(3) below. The Contractor shall be required to provide the requested labor and all equipment and materials within one week of a request issuance of a Notice to Proceed unless otherwise arranged. The Contractor shall agree to provide required labor within 24 hours for emergency situations whenever possible. The Contractor shall not perform any work without a Notice to Proceed signed by the Project Manager, and the City shall not pay for any work performed without a signed Notice to Proceed.

3. If a Task Order does not specify which City division is issuing the Task Order, Contractor shall enquire before acting on a Notice to Proceed. For any City division other than the Public Works Facilities Division the Notice to Proceed is effective only if written approval of the scope of work from the Facilities Division Director is attached.

4. Contractor is responsible for all required permits, licenses, and inspections required to perform this work, and shall comply with applicable municipal, county, state, and federal requirements. Contractor shall be responsible for verification of all existing conditions, measurements, dimensions, adherence to the Contract Documents, Construction Documents, Specifications, and approved directives.

B. Distribution:

City:	Contractor:
Caryn Grosse, PMP Project Manager III City of Santa Fe Facilities Division 2651 Siringo Road, Building E Santa Fe, NM 87505-5229	Greg Icenogle Owner Davenport Construction Management LLC 3201 Mercantile Ct., Suite A Santa Fe, NM 87507

C. Price Adjustments:

The awarded vendor shall maintain fixed pricing for each year of this contract, defined as twelve (12) months starting on and including the Effective Date. Pricing may be adjusted no more than once annually to commercially reasonable rates through an amendment to the price list attached as Exhibit A signed by Contractor and the City's Director of Public Works. Amendments to Exhibit A do not alter Contractor's maximum total compensation pursuant to Article 2 (Compensation) below. The Contractor must submit all pricing increase requests in writing to the City of Santa Fe designated department contact, providing evidence that the request is based on demonstrable market changes impacting the cost of products and services. The request must itemize all proposed changes by line item and include supporting documentation deemed acceptable by the City of Santa Fe (such as a letter from a manufacturer indicating price increases, etc.). The City's decision on acceptable documentation in this context shall be final and binding upon all parties to the contract. No price increase shall result in a higher profit margin. Pricing changes will apply to orders entered on or after the effective date of the price change. Price increases will not be retroactive to purchase orders already issued. Orders will be filled at the price indicated in the purchase order issued by the City.

To facilitate prompt consideration, all requests for price increases must include the following information:

i. Contract Item Number
ii. Current Item Price
iii. Proposed New Price
iv. Percentage of Increase
v. Mill/Supplier Notification of price increase indicating percentage of increase and including the reason for the increase.

2. ITB Compensation

A. Payment. The City shall compensate the Contractor based on Task Orders and the itemized amounts specified in Exhibit A. For the services described in the scope of work, the City will pay the Contractor up to, but not to exceed, $10,000,000.00. The applicable gross receipts tax (8.1875%) shall be shown as a separate amount on each billing or request for payment made under the contract, consistent with NMSA 1978, Section 13-1-108.

B. The compensation represents a maximum amount. The Contractor must notify the City when the Services provided under this Contract approach 90% of compensation total. Services rendered beyond the maximum compensation amount will not be reimbursed unless the Contract is amended in writing prior to the provision of such services.

C. Invoicing and Payment Terms Payment will be made upon the City's acceptance of deliverables and receipt of a detailed, certified invoice from the Contractor. Payments will be sent to the Contractor's designated address. The City shall issue payment in accordance with the timelines required by law. Invoices must be submitted no later than fifteen (15) days after the Contract's termination. Late invoices will not be processed or paid.

D. Extended Payment Terms for Grant-Funded Contracts. For grant-funded agreements, the City may issue payment within forty-five (45) days following submission of an undisputed payment request.

3. Term

THIS CONTRACT SHALL NOT BECOME EFFECTIVE UNTIL APPROVED BY THE CITY. This Contract shall terminate ten (10) years from date of final signature unless terminated pursuant to Paragraph 4 (Termination) or Paragraph 5 (Appropriations). A contract for construction services may not exceed ten (10) years, including all extensions and renewals, except as otherwise provided by NMSA 1978, Section 13-1-150 through 13-1-152 or SFCC 1987, Section 11-13.

4. Termination

A. Grounds. The City may terminate this Contract for convenience or cause. For contracts within their authority, the City Manager or their designee is authorized to provide the notice of termination, otherwise such notice of termination shall be provided by the Mayor or their designee as authorized by the Governing Body. The Contractor may only terminate this Contract based upon the City's uncured, material breach of this Contract.

i. Except as otherwise provided in Paragraphs 7.A and 17, the City shall give

Contractor written notice of termination at least thirty (30) days prior to the intended date of termination.

ii. Contractor shall give City written notice of termination at least thirty (30) days prior to the intended date of termination, which notice shall (i) identify all the City's material breaches of this Contract upon which the termination is based and (ii) state what the City must do to cure such material breaches. Contractor's notice of termination shall only be effective (i) if the City does not cure all material breaches within the thirty (30) day notice period or (ii) in the case of material breaches that cannot be cured within thirty (30) days, the City does not, within the thirty (30) day notice period, notify the Contractor of its intent to cure and begin with due diligence to cure the material breach.

iii. Notwithstanding the foregoing, this Contract may be terminated immediately upon written notice to the Contractor (i) if the Contractor becomes unable to perform the services contracted for, as determined by the City; (ii) if, during the term of this Contract, the Contractor is suspended or debarred by the City; or (iii) the Contract is terminated pursuant to Paragraph 5, "Appropriations," of this Contract.

B. Liability. Except as otherwise expressly allowed or provided under this Contract, the City's sole liability upon termination shall be to pay for acceptable work performed prior to the Contractor's receipt or issuance of a notice of termination; provided, however, that a notice of termination shall not nullify or otherwise affect either party's liability for pre-termination defaults under or breaches of this Contract. The Contractor shall submit an invoice for such work within thirty (30) days of receiving or sending the notice of termination. *THIS PROVISION IS NOT EXCLUSIVE AND DOES NOT WAIVE THE CITY'S OTHER LEGAL RIGHTS AND REMEDIES CAUSED BY THE CONTRACTOR'S DEFAULT/BREACH OF THIS CONTRACT.*

5. Appropriations

The terms of this Contract are contingent upon sufficient appropriations and authorization being made by the Governing Body for the performance of this Contract. If sufficient appropriations and authorization are not made by the Governing Body, this Contract shall terminate immediately upon written notice being given by the City to the Contractor. The City's decision as to whether sufficient appropriations are available shall be accepted by the Contractor and shall be final. If the City proposes an amendment to the Contract to unilaterally reduce funding, the Contractor shall have the option to terminate the Contract or to agree to the reduced funding, within thirty (30) days of receipt of the proposed amendment.

6. Status of Contractor

The Contractor and its agents and employees are independent contractors performing construction services for the City and are not employees of the City. The Contractor and its agents and employees shall not accrue leave, retirement, insurance, bonding, use of City vehicles, or any other benefits afforded to employees of the City as a result of this Contract. The Contractor acknowledges that all sums received hereunder are reportable by the Contractor for tax purposes, including without limitation, self-employment and business income tax. The Contractor agrees not to purport to bind the City unless the Contractor has express written authority to do so, and then only within the strict limits of that authority.

7. On-Call Price Agreement Performance and Payment Bond

A. When a Task Order is issued in excess of twenty-five thousand dollars ($25,000), the following bonds or security shall be delivered to the City and shall become binding on the parties upon the execution of the contract. If the Contractor fails to deliver the required performance and payment bonds, the Contractor's bid shall be rejected, its bid security shall be enforced to the extent of actual damages. Award of the Task Order via Notice to Proceed shall be made pursuant to the Procurement Code in the following manner:

i. a performance bond satisfactory to the City, executed by a surety company authorized to do business in this state and said surety to be approved in federal circular 570 as published by the United States treasury department or the state board of finance or the local governing authority, in an amount equal to one hundred percent of the price specified in the contract; and

ii. a payment bond satisfactory to the City, executed by a surety company authorized to do business in this state and said surety to be approved in federal circular 570 as published by the United States treasury department or the state board of finance or the local governing authority, in an amount equal to one hundred percent of the price specified in the contract, for the protection of all persons supplying labor and material to the contractor or its subcontractors for the performance of the work provided for in the contract.

B. A subcontractor shall provide a performance and payment bond on a public works building project if the subcontractor's contract for work to be performed on a project is one hundred twenty-five thousand dollars ($125,000) or more.

8. Assignment

The Contractor shall not assign or transfer any interest in this Contract or assign any claims for money due or to become due under this Contract without the prior written approval of the City.

9. Subcontracting

The Contractor shall not subcontract any portion of the services to be performed under this Contract without the prior written approval of the City. No such subcontract shall relieve the primary Contractor from its obligations and liabilities under this Contract, nor shall any subcontract obligate direct payment from the City.

10. Release

Final payment of the amounts due under this Contract shall operate as a release of the City, its officers and employees from all liabilities, claims and obligations whatsoever arising from or under this Contract.

11. Confidentiality

Any confidential information provided to or developed by the Contractor in the performance of this Contract shall be kept confidential and shall not be made available to any individual or organization by the Contractor without the prior written approval of the City.

12. Product of Service – Copyright

All materials developed or acquired by the Contractor under this Contract shall become the property of the City and shall be delivered to the City no later than the termination date of this Contract. Nothing developed or produced, in whole or in part, by the Contractor under this Contract shall be the subject of an application for copyright or other claim of ownership by or on behalf of the Contractor.

13. Conflict of Interest; Governmental Conduct Act

A. The Contractor represents and warrants that it presently has no interest and, during the term of this Contract, shall not acquire any interest, direct or indirect, which would conflict in any manner or degree with the performance or services required under the Contract.

B. The Contractor further represents and warrants that it has complied with, and, during the term of this Contract, will continue to comply with, and that this Contract complies with all applicable provisions of the Governmental Conduct Act, NMSA 1978, Chapter 10, Article 16.

C. Contractor's representations and warranties in Paragraphs A and B of this Article 12 are material representations of fact upon which the City relied when this Contract was entered into by the parties. Contractor shall provide immediate written notice to the City if, at any time during the term of this Contract, Contractor learns that Contractor's representations and warranties in Paragraphs A and B of this Article 12 were erroneous on the effective date of this Contract or have become erroneous by reason of new or changed circumstances. If it is later determined that Contractor's representations and warranties in Paragraphs A and B of this Article 12 were erroneous on the effective date of this Contract or have become erroneous by reason of new or changed circumstances, in addition to other remedies available to the City and notwithstanding anything in the Contract to the contrary, the City may immediately terminate the Contract.

D. All terms defined in the Governmental Conduct Act have the same meaning in this section.

14. Amendment

A. This Contract shall not be altered, changed or amended except by instrument in writing executed by the parties hereto and all other required signatories.

B. If the City proposes an amendment to the Contract to unilaterally reduce funding due to budget or other considerations, the Contractor shall, within thirty (30) days of receipt of the proposed Amendment, have the option to terminate the Contract, pursuant to the termination provisions as set forth in Article 4 herein, or to agree to the reduced funding.

15. Change Orders

A. Changes. The Contractor may only make changes or revisions within the Scope of Work as defined by Article 1 and/or Exhibit 1 after receipt of written approval by the City Manager or his/her designee. Such change may only be made to Tasks or Sub-Task as defined in the Scope of Work. Under no circumstance shall such change affect the:

i. Deliverable requirements, as outlined in the Scope of Work;
ii. Due date of any Deliverable, as outlined in the Scope of Work;
iii. Compensation of any Deliverable, as outlined in the Scope of Work;
iv. Contract compensation, as outlined in Article 2; or
v. Contract termination, as outlined in Article 4.

B. Change Request Process. In the event that circumstances warrant a change to accomplish the Scope of Work as described above, a Change Request shall be submitted that meets the following criteria:

i. The Project Manager shall draft a written Change Request for review and approval by the City Manager to include:
   (a) the name of the person requesting the change;
   (b) a summary of the required change;
   (c) the start date for the change;
   (d) the reason and necessity for change;
   (e) the elements to be altered; and
   (f) the impact of the change.

ii. The City Manager shall provide a written decision on the Change Request to the Contractor within a maximum of ten (10) Business Days of receipt of the Change Request. All decisions made by the City Manager are final. Change Requests, once approved, become a part of the Contract, and become binding as a part of the original Contract.

16. Merger

This Contract incorporates all the agreements, covenants, and understandings between the parties hereto concerning the subject matter hereof, and all such covenants, agreements and understandings have been merged into this written contract.

All terms and conditions of **ITB No. 25163** and the Contractor's response to such document(s) are incorporated herein by reference and included in the order of precedence.

No prior Agreement or understanding, oral or otherwise, of the parties or their agents shall be valid or enforceable unless embodied in this Contract.

17. Penalties for Violation of Law

NMSA 1978, Sections 13-1-28 through 13-1-199, imposes civil and criminal penalties for its violation. In addition, the New Mexico criminal statutes impose felony penalties for illegal bribes, gratuities and kickbacks.

18. Equal Opportunity Compliance

The Contractor agrees to abide by all federal and state laws and rules and regulations, and Santa Fe City Code, pertaining to equal employment opportunity. In accordance with all such laws of the State of New Mexico, the Contractor assures that no person in the United States shall, on the grounds of race, religion, color, national origin, ancestry, sex, age, physical or mental handicap, or serious medical condition, spousal affiliation, sexual orientation or gender identity, be excluded from employment with or participation in, be denied the benefits of, or be otherwise subjected to discrimination under any program or activity performed under this Contract. If Contractor is found not to be in compliance with these requirements during the life of this Contract, Contractor agrees to take appropriate steps to correct these deficiencies.

19. Applicable Law

The laws of the State of New Mexico shall govern this Contract, without giving effect to its choice of law provisions. Venue shall be proper only in a New Mexico court of competent jurisdiction in accordance with NMSA 1978, Section 38-3-2. By execution of this Contract, Contractor acknowledges and agrees to the jurisdiction of the courts of the State of New Mexico over any and all lawsuits arising under or out of any term of this Contract.

20. Workers' Compensation

The Contractor agrees to comply with state laws and rules applicable to workers compensation benefits for its employees. If the Contractor fails to comply with the Workers Compensation Act and applicable rules when required to do so, this Contract may be terminated by the City.

21. Other Insurance

If the services contemplated under this Contract will be performed on or in City facilities or property, Contractor shall maintain in force during the entire term of this Contract, the following insurance coverage(s), naming the City as additional insured.

A. **Commercial General Liability** insurance shall be written on an occurrence basis and be a broad as ISO Form CG 00 01 with limits not less than $2,000,000 per occurrence and $2,000,000 in the aggregate for claims against bodily injury, personal and advertising injury, and property damage. Said policy shall include broad form Contractual Liability coverage and be endorsed to name the City of Santa Fe their officials, officers, employees, and agents as additional insureds.

B. **Business Automobile Liability** insurance for all owned, non-owned automobiles, with a combined single limit not less than $1,000,000 per accident.

C. **Broader Coverage and Limits**. The insurance requirements under this Contract shall be the greater of (1) the minimum coverage and limits specified in this Contract, or (2) the broader coverage and maximum limits of coverage of any insurance policy or proceeds available to the Named Insured. It is agreed that these insurance requirements shall not in any way act to reduce coverage that is broader or that includes higher limits than the minimums required herein. No

representation is made that the minimum insurance requirements of this Contract are sufficient to cover the obligations of Contractor hereunder.

D. Contractor shall maintain the above insurance for the term of this Contract and name the City as an additional insured and provide for 30 days cancellation notice on any Certificate of Insurance form furnished by Contractor. Such certificate shall also specifically state the coverage provided under the policy is primary over any other valid and collectible insurance and provide a waiver of subrogation.

22. Records and Financial Audit

The Contractor shall maintain detailed time and expenditure records that indicate the date; time, nature and cost of services rendered during the Contract's term and effect and retain them for a period of three (3) years from the date of final payment under this Contract. The records shall be subject to inspection by the City. The City shall have the right to audit billings both before and after payment. Payment under this Contract shall not foreclose the right of the City to recover excessive or illegal payments

23. Indemnification

The Contractor shall indemnify, hold harmless, or insure the City, including its officers, employees or agents, against liability, claims, damages, losses or expenses, including attorney fees, only to the extent that the liability, damages, losses or costs are caused by, or arise out of, the acts or omissions of the indemnitor or its officers, employees or agents. In the event that any action, suit or proceeding related to the services performed by the Contractor or any officer, agent, employee, servant or subcontractor under this Contract is brought against the Contractor, the Contractor shall, as soon as practicable but no later than two (2) business days after it receives notice thereof, notify the legal counsel of the City.

24. New Mexico Tort Claims Act

Any liability incurred by the City of Santa Fe in connection with this Contract is subject to the immunities and limitations of the New Mexico Tort Claims Act, NMSA 1978, Section 41-4-1, et. seq., as amended. The City and its "public employees" as defined in the New Mexico Tort Claims Act, do not waive sovereign immunity, do not waive any defense and do not waive any limitation of liability pursuant to law. No provision in this Contract modifies or waives any provision of the New Mexico Tort Claims Act.

25. Invalid Term or Condition

If any term or condition of this Contract shall be held invalid or unenforceable, the remainder of this Contract shall not be affected and shall be valid and enforceable.

26. Enforcement of Contract

A party's failure to require strict performance of any provision of this Contract shall not waive or diminish that party's right thereafter to demand strict compliance with that or any other provision. No waiver by a party of any of its rights under this Contract shall be effective unless express and in writing,

and no effective waiver by a party of any of its rights shall be effective to waive any other rights.

27. Notices

Any notice required to be given to either party by this Contract shall be in writing and shall be delivered in person, by courier service or by U.S. mail, either first class or certified, return receipt requested, postage prepaid, as follows:

To the City:	**To the Contractor:**
Chief Procurement Officer purchasing@santafenm.gov PO Box 909 Santa Fe, NM 87504-0909 Caryn Grosse, PMP Project Manager III City of Santa Fe Public Works 2651 Siringo Road, Building E Santa Fe, NM 87505-5229 clgrosse@santafenm.gov (505) 955-5938	Greg Icenogle Owner Davenport Construction Management LLC 3201 Mercantile Ct., Suite A Santa Fe, NM 87507 greg.icenogle@dcmnm.com 505-977-4904

28. Authority

If Contractor is other than a natural person, the individual(s) signing this Contract on behalf of Contractor represents and warrants that he or she has the power and authority to bind Contractor, and that no further action, resolution, or approval from Contractor is necessary to enter into a binding contract.

29. Progress Payments

Based upon Application for Payment submitted to the City by the Contractor and Certificates for Payment issued by the City, the City shall make progress payments on account of the Contract sum to the Contractor as provided in the Contract documents for the period ending the last day of the month as follows:

Not later than twenty-one (21) days following the end of the period covered by the Application for Payment, one hundred percent (100%) of the portion of the Contract Sum properly allocable to labor, materials, and equipment incorporated in the work and one hundred percent (100%) of the portion of the Contract sum properly allocable to materials and equipment suitably stored at the site or some other location agreed upon in writing for the period covered by the Application for Payment, less the aggregate of previous payments made by the City; and upon substantial completion of the entire work, a sum sufficient to increase the total payments to one hundred percent (100%) of the Contract sum, less such amounts as the City shall determine for all incomplete work and unsettled claims as provided in the Contract documents.

30. Final Payment

Final payment, constituting the entire unpaid balance of the Contract sum, unless it is a disputed payment, shall be paid by the City to the Contractor within twenty-one (21) calendar days, after all deficiencies to the Contract document that were noted during the Substantial Completion Inspection and listed on the attachment to the Certificate of Substantial Completion have been corrected, and provided the Contract has been fully performed and a final Certificate for Payment has been issued by the City. In addition, the Contractor shall provide to the City a certified statement of Release of Lien (AIA Document G706A or approved form), Consent of Surety, Warranty from Prime Contractor, Warranties from Suppliers and Manufacturers, training sessions, equipment/operating manuals, and as-built drawings.

31. Schedule

The Contractor shall, within five (5) days after the effective date of Notice to Proceed, prepare and submit a progress schedule covering project operations for the 30-day Contract period. This progress schedule shall be of the type generally referred to as a Critical Path Method (CPM), Critical Path Schedule (CPS), and Critical Path Analysis (CPA), and other similar designations. The CPM shall be used to control the timing and sequences of the project. All work shall be done in accordance with the CPM Planning and Scheduling. A written statement of explanation shall be submitted with the progress schedule. All costs incurred by the contractor to implement the CPM shall be borne by the Contractor and are part of their Contract.

32. General and Special Provisions

A. Terms used in this Contract which are defined in the Conditions of the Contract shall have the meanings designated in those Conditions.

B. An enumeration of the Contractor's General Comprehensive Liability Insurance requirements.

C. Appears in the General Conditions of the Contract for construction. Insurance requirements are also described in the Instructions to the Bidder section of the Project Manual. Contractor shall maintain adequate insurance in at least the maximum amounts, which the City could be liable under the New Mexico Tort Claims Act and shall provide proof of such insurance coverage to the City. It is the sole responsibility of the Contractor to comply with the law.

D. This Contract shall not become effective until: (1) approved by the Governing Body; and (2) signed by all parties required to sign this Contract.

E. The Contractor shall maintain detailed time records which indicate the date, time and nature of services rendered. These records shall be subject to inspection by the City, the Department of Finance and Administration and the State Auditor. The City shall have the right to audit billings both before and after payment. Payment under this Contract shall not foreclose the right of the City to recover excessive illegal payments.

F. The Contractor warrants that the Contractor presently has no interest and shall not acquire any interest, direct or indirect, which would conflict in any manner or degree with the performance or services required under this Contract.

G. The Contractor hereby warrants that the Contractor complies with the Americans with Disabilities Act, 29 CFR 1630.

H. Gender, Singular/Plural. Words of any gender used in this Contract shall be held and construed to include any other gender, and words in the singular number shall be held to include the plural, unless the context otherwise requires.

I. Captions and Section Headings. The captions and section headings contained in this Contract are for convenience of reference only, and in no way limit, define, or enlarge the terms, scope, and conditions of this Contract.

J. Certificates and Documents Incorporated. All certificates and documentation required by the provisions of the Contract shall be attached to this Contract at the time of execution and are hereby incorporated by reference as though set forth in full in this Contract to the extent they are consistent with its conditions and terms.

K. Separability. If any clause or provision of this Contract is illegal, invalid or unenforceable under present or future laws effective during the term of this Contract, then and in that event, it is the intention of the parties hereto that the remainder of this Contract shall not be affected thereby.

L. Words and Phrases. Words, phrases, and abbreviations, which have well-known technical or trade meanings used in the Contract documents shall be used according to such recognized meaning. In the event of a conflict, the more stringent meaning shall govern.

M. Relationship of Contract Documents. The Contract Documents are complementary, and any requirement of one Contract Document shall be as binding as if required by all.

N. Pursuant to NMSA 1978, Section 13-1-191, reference is hereby made to the Criminal Laws of New Mexico (including NMSA 1978, Sections 30-14-1, 30-24-2, and 30-41-1 through 30-41-3) which prohibit bribes, kickbacks, and gratuities, violation of which constitutes a felony. Further, the Procurement Code (NMSA 1978, Sections 13-1-28 through 13-1-199) imposes civil and criminal penalties for its violation.

O. Pursuant to NMSA 1978, Section 13-4-11. Reference is hereby made to the Minimum Wage on Public Works; weekly payments; posting wage scale; withholding funds.

IN WITNESS WHEREOF, the Parties have executed this Contract as of the date of the signature by the required approval authorities below.

CITY OF SANTA FE:

_____
ALAN WEBBER, MAYOR

DATE: _____

CONTRACTOR:
Davenport Construction Management LLC

Greg Icenogle
_____
GREG ICENOGLE, OWNER

DATE: Dec 1, 2025

NMBTIN: 03-053313-009

ATTEST:

_____
ANDREA SALAZAR, CITY CLERK

Approved to form and legal sufficiency by:

Kevin L. Nault
Kevin L. Nault (Dec 2, 2025 15:43:39 MST)
_____
ASSISTANT CITY ATTORNEY

APPROVED FOR FINANCES:

Emily K. Oster
_____
EMILY OSTER, FINANCE DIRECTOR

Exhibit A

Bidder Instructions:

Items - Bidders do not have the ability to add or delete items.

Approx. Qty. - Quantities provides are estimates, only, and do not establish a definite quantity contract. Actual quantities purchased under a resulting agreement may vary.
UOM (Unit of Measure) **-** Bidders do not have the ability to change the UOM. Any variation from the UOM identified may be provided in the Comments.
Article and Description - Bidder cannot change Article and Description. Any clarification, explanation, brand name identification, etc. must be provided in the Comments.
Unit Price - Bidders must provide pricing that conforms with the identified Unit Price.
Comments - Bidders may only provide comments to explain or clarify an item, identify a brand name, or provide information as specifically stated in the corresponding ITB

Item	Approx. Qty.	UOM	Article and Description	Unit Price	Comments
			Wage Rates for Projects Under $60,000.00		
1	1	HR - Hour	Superintendent - Regular Hourly Rate	$75.00	
2	1	HR - Hour	Superintendent - Overtime Hourly Rate	$112.50	
3	1	HR - Hour	Journeyman or Experienced Worker - Regular Hourly Rate	$70.00	
4	1	HR - Hour	Journeyman or Experienced Worker - Overtime Hourly Rate	$105.00	
5	1	HR - Hour	Laborer - Regular Hourly Rate	$65.00	
6	1	HR - Hour	Laborer - Overtime Hourly Rate	$97.50	
			Wage Rates for Projects Over $60,000.00		
7	1	HR - Hour	Superintendent - Regular Hourly Rate	$80.00	
8	1	HR - Hour	Superintendent - Overtime Hourly Rate	$120.00	
9	1	HR - Hour	Journeyman or Experienced Worker - Regular Hourly Rate	$75.00	
10	1	HR - Hour	Journeyman or Experienced Worker - Overtime Hourly Rate	$112.50	
11	1	HR - Hour	Laborer - Regular Hourly Rate	$70.00	
12	1	HR - Hour	Laborer - Overtime Hourly Rate	$105.00	
13	1	Daily	Temporary Site Office Trailer, rental rate	$46.00	
14	1	Daily	Temporary Fencing, rental rate	$85.00	40 Panels @ 6' tall x 14' wide
15	1	Daily	Sanitary/toilet Facilities, rental rate	$10.00	
16		Percent	Discount off all materials. Enter zero if no discount is offered.	0%	

Davenport Construction Management, LLC

On-Call Construction ITB 25163_Davenport

Final Audit Report 2025-12-02

Created:	2025-11-25
By:	MATTHEW HARDING (mrharding@santafenm.gov)
Status:	Signed
Transaction ID:	CBJCHBCAABAAJkk3DZohN0krb7joMPjhuVuSu67y36ai

"On-Call Construction ITB 25163_Davenport" History

Document created by MATTHEW HARDING (mrharding@santafenm.gov)
2025-11-25 - 9:03:42 PM GMT- IP address: 63.232.20.2

Document emailed to Greg Icenogle (greg.icenogle@dcmnm.com) for signature
2025-11-25 - 9:05:38 PM GMT

Email viewed by Greg Icenogle (greg.icenogle@dcmnm.com)
2025-12-01 - 8:24:54 PM GMT- IP address: 71.25.94.229

Document e-signed by Greg Icenogle (greg.icenogle@dcmnm.com)
Signature Date: 2025-12-01 - 8:27:55 PM GMT - Time Source: server- IP address: 71.25.94.229

Document emailed to Kevin Nault (klnault@santafenm.gov) for signature
2025-12-01 - 8:27:57 PM GMT

Email viewed by Kevin Nault (klnault@santafenm.gov)
2025-12-01 - 8:28:04 PM GMT- IP address: 51.54.38.112

Signer Kevin Nault (klnault@santafenm.gov) entered name at signing as Kevin L. Nault
2025-12-02 - 10:43:37 PM GMT- IP address: 172.59.2.22

Document e-signed by Kevin L. Nault (klnault@santafenm.gov)
Signature Date: 2025-12-02 - 10:43:39 PM GMT - Time Source: server- IP address: 172.59.2.22

Agreement completed.
2025-12-02 - 10:43:39 PM GMT

Powered by Adobe Acrobat Sign

ACORD

CERTIFICATE OF LIABILITY INSURANCE

DATE (MM/DD/YYYY) 4/21/2025

THIS CERTIFICATE IS ISSUED AS A MATTER OF INFORMATION ONLY AND CONFERS NO RIGHTS UPON THE CERTIFICATE HOLDER. THIS CERTIFICATE DOES NOT AFFIRMATIVELY OR NEGATIVELY AMEND, EXTEND OR ALTER THE COVERAGE AFFORDED BY THE POLICIES BELOW. THIS CERTIFICATE OF INSURANCE DOES NOT CONSTITUTE A CONTRACT BETWEEN THE ISSUING INSURER(S), AUTHORIZED REPRESENTATIVE OR PRODUCER, AND THE CERTIFICATE HOLDER.

IMPORTANT: If the certificate holder is an ADDITIONAL INSURED, the policy(ies) must have ADDITIONAL INSURED provisions or be endorsed. If SUBROGATION IS WAIVED, subject to the terms and conditions of the policy, certain policies may require an endorsement. A statement on this certificate does not confer rights to the certificate holder in lieu of such endorsement(s).

PRODUCER License # 0757776 HUB International Insurance Services (SOW) 2905 Rodeo Park Drive East Building 6, Suite 100 Santa Fe, NM 87505	CONTACT NAME: Michelle Vialpando PHONE (A/C, No, Ext): (505) 992-1873 FAX (A/C, No): (866) 487-3972 E-MAIL ADDRESS: michelle.vialpando@hubinternational.com
INSURED Davenport Construction Management, LLC 141 Camino de las Crucitas Santa Fe, NM 87501	INSURER A : Central Mutual Insurance Company — 20230 INSURER B : All America Insurance Company — 20222 INSURER C : Builders Trust of New Mexico INSURER D : Axis Surplus Insurance Company — 26620 INSURER E : INSURER F :

COVERAGES **CERTIFICATE NUMBER:** **REVISION NUMBER:**

THIS IS TO CERTIFY THAT THE POLICIES OF INSURANCE LISTED BELOW HAVE BEEN ISSUED TO THE INSURED NAMED ABOVE FOR THE POLICY PERIOD INDICATED. NOTWITHSTANDING ANY REQUIREMENT, TERM OR CONDITION OF ANY CONTRACT OR OTHER DOCUMENT WITH RESPECT TO WHICH THIS CERTIFICATE MAY BE ISSUED OR MAY PERTAIN, THE INSURANCE AFFORDED BY THE POLICIES DESCRIBED HEREIN IS SUBJECT TO ALL THE TERMS, EXCLUSIONS AND CONDITIONS OF SUCH POLICIES. LIMITS SHOWN MAY HAVE BEEN REDUCED BY PAID CLAIMS.

INSR LTR	TYPE OF INSURANCE	ADDL INSD	SUBR WVD	POLICY NUMBER	POLICY EFF (MM/DD/YYYY)	POLICY EXP (MM/DD/YYYY)	LIMITS	
A	X COMMERCIAL GENERAL LIABILITY CLAIMS-MADE X OCCUR X PD Ded:$500 GEN'L AGGREGATE LIMIT APPLIES PER: POLICY X PRO-JECT LOC OTHER:	X	X	CLP8970287	4/18/2025	4/18/2026	EACH OCCURRENCE DAMAGE TO RENTED PREMISES (Ea occurrence) MED EXP (Any one person) PERSONAL & ADV INJURY GENERAL AGGREGATE PRODUCTS - COMP/OP AGG	$ 1,000,000 $ 300,000 $ 5,000 $ 1,000,000 $ 2,000,000 $ 2,000,000
B	AUTOMOBILE LIABILITY X ANY AUTO OWNED AUTOS ONLY SCHEDULED AUTOS X HIRED AUTOS ONLY X NON-OWNED AUTOS ONLY	X	X	BAP8970288	4/18/2025	4/18/2026	COMBINED SINGLE LIMIT (Ea accident) BODILY INJURY (Per person) BODILY INJURY (Per accident) PROPERTY DAMAGE (Per accident)	$ 1,000,000 $ $ $
A	X UMBRELLA LIAB X OCCUR EXCESS LIAB CLAIMS-MADE DED X RETENTION $ 10,000			CXS8970289	4/18/2025	4/18/2026	EACH OCCURRENCE AGGREGATE	$ 4,000,000 $ 4,000,000
C	WORKERS COMPENSATION AND EMPLOYERS' LIABILITY ANY PROPRIETOR/PARTNER/EXECUTIVE OFFICER/MEMBER EXCLUDED? (Mandatory in NH) Y / N: Y If yes, describe under DESCRIPTION OF OPERATIONS below	N / A	X	6706	1/1/2025	1/1/2026	X PER STATUTE OTH-ER E.L. EACH ACCIDENT E.L. DISEASE - EA EMPLOYEE E.L. DISEASE - POLICY LIMIT	$ 2,000,000 $ 2,000,000 $ 2,000,000
D	Professional Liab.			CM005734-02-2024	6/29/2024	6/29/2025	10,000 Ret/1,000,000	2,000,000

DESCRIPTION OF OPERATIONS / LOCATIONS / VEHICLES (ACORD 101, Additional Remarks Schedule, may be attached if more space is required)

.

SEE ATTACHED ACORD 101

CERTIFICATE HOLDER

City of Santa Fe
PO Box 909
Santa Fe, NM 87504

CANCELLATION

SHOULD ANY OF THE ABOVE DESCRIBED POLICIES BE CANCELLED BEFORE THE EXPIRATION DATE THEREOF, NOTICE WILL BE DELIVERED IN ACCORDANCE WITH THE POLICY PROVISIONS.

AUTHORIZED REPRESENTATIVE



ACORD 25 (2016/03) © 1988-2015 ACORD CORPORATION. All rights reserved.
The ACORD name and logo are registered marks of ACORD

From:	DUTTON-LEYDA, TRAVIS K.
To:	KAHAHANE, ELIZABETH L.
Cc:	Purchasing DET
Subject:	Re: Determination Request – Miscellaneous General Contracting work for the City of Santa Fe
Date:	Wednesday, August 20, 2025 9:05:00 AM
Attachments:	image001.png

Hi, this is construction.

Thank you.

Regards,

Travis Dutton-Leyda
Chief Procurement Officer
City of Santa Fe
200 Lincoln Avenue
Santa Fe, NM 87501
505-629-8351
tkduttonleyda@santafenm.gov

https://santafenm.gov/finance-2/purchasing-1

CITY OF SANTA FE
FACILITIES

Vision without action is merely a dream.
Action without vision passes the time.
Vision with action can change the world. ~ Joel A. Barker

> On Aug 20, 2025, at 8:56 AM, KAHAHANE, ELIZABETH L. <elkahahane@santafenm.gov> wrote:
>
> Aloha Purchasing!
>
> Facilities Division is requesting a SOW determination for the following:
>
> > The Contractor shall perform the following work in accordance with their Bid Pricing, attached hereto and made a part thereof, as Exhibit A:
> > 1. This work shall include Miscellaneous General Contracting work for the City

of Santa Fe.

2. The Contractor shall be required to provide On-Call General Contracting Services for any number of the activities listed under this Scope of Work upon the request of the City. Once a need is identified, the City will issue a written Task Order to the Contractor detailing the services required. Upon receiving the City's request for services, the Contractor shall promptly provide the City with an estimate (based upon the rates submitted in the Bid Form), cost summary, and project schedule required to complete the assignment or task. Project schedules, negotiated price, and completion dates shall be determined on a project-by-project basis and dependent upon the urgency of that task. The Contractor may be required to do some of the work in phases. The Contractor shall be required to provide the requested labor and all equipment and materials within one week of a request issuance of a Notice to Proceed unless otherwise arranged. The Contractor shall agree to provide required labor within 24 hours for emergency situations whenever possible.

3. The City of Santa Fe Public Works Facilities Division shall be able to utilize this On-Call Contract as needed and as funding is available. All other City of Santa Fe staff will only be authorized to utilize this On-Call Contract with prior, written approval of the scope of work, from the Facilities Division Director, before commencing any work applicable to this On-Call Contract.

4. Contractor is responsible for all required permits and licenses required to perform this work. Contractor shall be responsible for adherence to the Contract Documents, Construction Documents, Specifications, and approved directives.

5. Contractor shall be responsible for any applicable Local, County, State and Federal requirements and permits.

6. Contractor shall be responsible for verifications of all existing conditions, measurements, and dimensions for bidding. Contractor shall be responsible for all permits, fees, and State and/or City inspections associated with their work.

Please let me know if additional information is required.
Thank you!

Best,
Elizabeth "Lisa" Kahahane, CPO
Contract Administrator | Facilities Division | Public Works Dept.
Email: elkahahane@santafenm.gov
M: (505) 795-2439
O: (505) 955-5934

CITY OF SANTA FE
FACILITIES

This e-mail and any attachments may contain confidential information and/or

information protected by intellectual property rights for the exclusive attention of the intended addressees. If you have received this transmission in error, please immediately notify the sender by return e-mail and delete this message and its attachments. Unauthorized use, copying or further full or partial distribution of this e-mail or its contents is prohibited.

Services Offered to the City of Santa Fe (FY26)

Approved:
These services have been approved by the New Mexico Council for Purchasing from Persons with Disabilities and are available through Horizons of New Mexico.

- ADA Accessibility Consulting Services
- Auctioneering Services
- Bulk Mailing and Sorting
- Call Center Services
- Computer Refurbishing
- Courier Services
- Decontamination, Sanitation and Sterilization Services
- Debris Removal
- Document Imaging
- Document Shredding
- Envelope Stuffing
- General Labor
- Hard Drive Destruction
- Janitorial and Housekeeping Services – Including Carpet Cleaning & Floor Care
- Landscape Irrigation
- Landscaping
- Mailing Services
- Management of an Assistive Technology Reuse and Recycling Program
- Medical Waste Disposal
- Meeting Minute Preparation Services
- Pest Control and Extermination Services
- Printing Services
- Rest Area Maintenance
- Screen Printing
- Snow Removal
- Temporary Staffing Services
- Yard, Grounds, and Lawn Maintenance

Permissive:
The services have been approved by the New Mexico Council for Purchasing from Persons with Disabilities as permissible for sale under the State Use Act through Horizons of New Mexico. While the Council recognizes that certain Horizons of New Mexico members are capable of performing the services listed below, said services are considered permissive and excluded from the mandatory aspect of the State Use Program. Any procurement of the below services through Horizons of New Mexico is at the discretion of the purchasing agent and will be considered by the Council on a case-by-case basis.

- Graphic Design
- Graphic Design - Logo Design
- IT – Enterprise Application
- IT – IV & V
- IT Network and Database Management
- IT Support
- IT Security Services
- IT – Web Design
- IT – Web Programmer
- Marketing
- Social Media Marketing

For the complete State Use service list, please go to: http://horizonsofnewmexico.org/services.html

GB Packet_Davenport_On-Call GC ITB 25163

Final Audit Report 2025-12-08

Created:	2025-12-05
By:	Elizabeth Kahahane (elkahahane@santafenm.gov)
Status:	Signed
Transaction ID:	CBJCHBCAABAAum3xnlcTwlVJnTJBYzVggmhpC2AWcw6v

"GB Packet_Davenport_On-Call GC ITB 25163" History

Document created by Elizabeth Kahahane (elkahahane@santafenm.gov)
2025-12-05 - 6:14:13 PM GMT- IP address: 63.232.20.2

Document emailed to CARYN GROSSE (clgrosse@santafenm.gov) for signature
2025-12-05 - 6:16:35 PM GMT

Email viewed by CARYN GROSSE (clgrosse@santafenm.gov)
2025-12-05 - 6:46:15 PM GMT- IP address: 104.47.64.254

Document e-signed by CARYN GROSSE (clgrosse@santafenm.gov)
Signature Date: 2025-12-05 - 6:46:45 PM GMT - Time Source: server- IP address: 63.232.20.2

Document emailed to Timothy Farrell (tgfarrell@santafenm.gov) for signature
2025-12-05 - 6:46:47 PM GMT

Email viewed by Timothy Farrell (tgfarrell@santafenm.gov)
2025-12-08 - 2:26:49 PM GMT- IP address: 104.47.64.254

Document e-signed by Timothy Farrell (tgfarrell@santafenm.gov)
Signature Date: 2025-12-08 - 2:27:04 PM GMT - Time Source: server- IP address: 63.232.20.2

Document emailed to JOHN BURNETT (jsburnett@santafenm.gov) for signature
2025-12-08 - 2:27:06 PM GMT

Email viewed by JOHN BURNETT (jsburnett@santafenm.gov)
2025-12-08 - 2:29:25 PM GMT- IP address: 71.228.98.124

Document e-signed by JOHN BURNETT (jsburnett@santafenm.gov)
Signature Date: 2025-12-08 - 2:29:59 PM GMT - Time Source: server- IP address: 71.228.98.124

Agreement completed.
2025-12-08 - 2:29:59 PM GMT

Powered by Adobe Acrobat Sign

GB_Packet_Davenport_On-Call_GC_ITB_25163_v3.0

Final Audit Report 2025-12-24

Created:	2025-12-19
By:	RACHEL GABALDON (rdgabaldon@santafenm.gov)
Status:	Signed
Transaction ID:	CBJCHBCAABAAOf_Mg8KZd8yl4cmlSh1J7nl7yTMYcgaB

"GB_Packet_Davenport_On-Call_GC_ITB_25163_v3.0" History

Document created by RACHEL GABALDON (rdgabaldon@santafenm.gov)
2025-12-19 - 5:36:32 PM GMT- IP address: 63.232.20.2

Document emailed to ajhopkins@santafenm.gov ajhopkins@santafenm.gov (ajhopkins@santafenm.gov) for signature
2025-12-19 - 5:38:11 PM GMT

Email viewed by ajhopkins@santafenm.gov ajhopkins@santafenm.gov (ajhopkins@santafenm.gov)
2025-12-19 - 6:26:57 PM GMT- IP address: 104.47.65.254

Document e-signed by ajhopkins@santafenm.gov ajhopkins@santafenm.gov (ajhopkins@santafenm.gov)
Signature Date: 2025-12-19 - 6:27:24 PM GMT - Time Source: server- IP address: 63.232.20.2

Document sent to JoAnn Lovato (jdlovato@santafenm.gov) and Travis Dutton-Leyda (tkduttonleyda@santafenm.gov) for signature. One of them to sign
2025-12-19 - 6:27:29 PM GMT

Email viewed by Travis Dutton-Leyda (tkduttonleyda@santafenm.gov)
2025-12-19 - 8:21:17 PM GMT- IP address: 63.232.20.2

Email viewed by Travis Dutton-Leyda (tkduttonleyda@santafenm.gov)
2025-12-22 - 5:20:50 AM GMT- IP address: 146.75.203.1

Email viewed by JoAnn Lovato (jdlovato@santafenm.gov)
2025-12-23 - 6:31:23 PM GMT- IP address: 51.54.38.112

Document e-signed by JoAnn Lovato (jdlovato@santafenm.gov)
Signature Date: 2025-12-23 - 10:52:24 PM GMT - Time Source: server- IP address: 63.232.20.2

Document emailed to EMILY OSTER (ekoster@santafenm.gov) for signature
2025-12-23 - 10:52:27 PM GMT

Powered by Adobe Acrobat Sign

Email viewed by EMILY OSTER (ekoster@santafenm.gov)

2025-12-24 - 4:47:35 PM GMT- IP address: 174.218.241.65

Document e-signed by EMILY OSTER (ekoster@santafenm.gov)

Signature Date: 2025-12-24 - 4:54:01 PM GMT - Time Source: server- IP address: 174.211.104.80

Agreement completed.

2025-12-24 - 4:54:01 PM GMT

ACORD

CERTIFICATE OF LIABILITY INSURANCE

DATE (MM/DD/YYYY) 12/17/2025

THIS CERTIFICATE IS ISSUED AS A MATTER OF INFORMATION ONLY AND CONFERS NO RIGHTS UPON THE CERTIFICATE HOLDER. THIS CERTIFICATE DOES NOT AFFIRMATIVELY OR NEGATIVELY AMEND, EXTEND OR ALTER THE COVERAGE AFFORDED BY THE POLICIES BELOW. THIS CERTIFICATE OF INSURANCE DOES NOT CONSTITUTE A CONTRACT BETWEEN THE ISSUING INSURER(S), AUTHORIZED REPRESENTATIVE OR PRODUCER, AND THE CERTIFICATE HOLDER.

IMPORTANT: If the certificate holder is an ADDITIONAL INSURED, the policy(ies) must have ADDITIONAL INSURED provisions or be endorsed. If SUBROGATION IS WAIVED, subject to the terms and conditions of the policy, certain policies may require an endorsement. A statement on this certificate does not confer rights to the certificate holder in lieu of such endorsement(s).

PRODUCER License # 0757776 HUB International Insurance Services (SOW) 2905 Rodeo Park Drive East Building 6, Suite 100 Santa Fe, NM 87505	CONTACT NAME: Michelle Vialpando PHONE (A/C, No, Ext): (505) 992-1873 FAX (A/C, No): (866) 487-3972 E-MAIL ADDRESS: michelle.vialpando@hubinternational.com
INSURED Davenport Construction Management LLC 3201 Mercantile Ct Suite A Santa Fe, NM 87507	INSURER A : Central Mutual Insurance Company — NAIC # 20230 INSURER B : All America Insurance Company — NAIC # 20222 INSURER C : Builders Trust of New Mexico INSURER D : Axis Surplus Insurance Company — NAIC # 26620 INSURER E : INSURER F :

COVERAGES **CERTIFICATE NUMBER:** **REVISION NUMBER:**

THIS IS TO CERTIFY THAT THE POLICIES OF INSURANCE LISTED BELOW HAVE BEEN ISSUED TO THE INSURED NAMED ABOVE FOR THE POLICY PERIOD INDICATED. NOTWITHSTANDING ANY REQUIREMENT, TERM OR CONDITION OF ANY CONTRACT OR OTHER DOCUMENT WITH RESPECT TO WHICH THIS CERTIFICATE MAY BE ISSUED OR MAY PERTAIN, THE INSURANCE AFFORDED BY THE POLICIES DESCRIBED HEREIN IS SUBJECT TO ALL THE TERMS, EXCLUSIONS AND CONDITIONS OF SUCH POLICIES. LIMITS SHOWN MAY HAVE BEEN REDUCED BY PAID CLAIMS.

INSR LTR	TYPE OF INSURANCE	ADDL INSD	SUBR WVD	POLICY NUMBER	POLICY EFF (MM/DD/YYYY)	POLICY EXP (MM/DD/YYYY)	LIMITS	
A	X COMMERCIAL GENERAL LIABILITY CLAIMS-MADE X OCCUR X PD Ded: $500 GEN'L AGGREGATE LIMIT APPLIES PER: POLICY X PRO-JECT LOC OTHER:	X	X	CLP8970287	4/18/2025	4/18/2026	EACH OCCURRENCE DAMAGE TO RENTED PREMISES (Ea occurrence) MED EXP (Any one person) PERSONAL & ADV INJURY GENERAL AGGREGATE PRODUCTS - COMP/OP AGG	$ 1,000,000 $ 300,000 $ 5,000 $ 1,000,000 $ 2,000,000 $ 2,000,000
B	AUTOMOBILE LIABILITY X ANY AUTO OWNED AUTOS ONLY SCHEDULED AUTOS X HIRED AUTOS ONLY X NON-OWNED AUTOS ONLY	X	X	BAP8970288	4/18/2025	4/18/2026	COMBINED SINGLE LIMIT (Ea accident) BODILY INJURY (Per person) BODILY INJURY (Per accident) PROPERTY DAMAGE (Per accident)	$ 1,000,000 $ $ $
A	X UMBRELLA LIAB X OCCUR EXCESS LIAB CLAIMS-MADE DED X RETENTION $ 10,000			CXS8970289	4/18/2025	4/18/2026	EACH OCCURRENCE AGGREGATE	$ 4,000,000 $ 4,000,000
C	WORKERS COMPENSATION AND EMPLOYERS' LIABILITY ANY PROPRIETOR/PARTNER/EXECUTIVE OFFICER/MEMBER EXCLUDED? (Mandatory in NH) Y / N: Y If yes, describe under DESCRIPTION OF OPERATIONS below	N / A	X	6706	1/1/2026	1/1/2027	X PER STATUTE OTH-ER E.L. EACH ACCIDENT E.L. DISEASE - EA EMPLOYEE E.L. DISEASE - POLICY LIMIT	$ 2,000,000 $ 2,000,000 $ 2,000,000
D	Professional Liab.			CM005734-03-2005	6/29/2025	6/29/2026	10,000 Ret/1,000,000	2,000,000
A	Leased & Rented Eqpt			CLP8970287	4/18/2025	4/18/2026	Ded: $500 / Limit:	25,000

DESCRIPTION OF OPERATIONS / LOCATIONS / VEHICLES (ACORD 101, Additional Remarks Schedule, may be attached if more space is required)

.

SEE ATTACHED ACORD 101

CERTIFICATE HOLDER

City of Santa Fe
PO Box 909
Santa Fe, NM 87504

CANCELLATION

SHOULD ANY OF THE ABOVE DESCRIBED POLICIES BE CANCELLED BEFORE THE EXPIRATION DATE THEREOF, NOTICE WILL BE DELIVERED IN ACCORDANCE WITH THE POLICY PROVISIONS.

AUTHORIZED REPRESENTATIVE

ACORD 25 (2016/03) **© 1988-2015 ACORD CORPORATION. All rights reserved.**

The ACORD name and logo are registered marks of ACORD

AGENCY CUSTOMER ID: DAVECON-09 SMONCAYO

LOC #: 1

ADDITIONAL REMARKS SCHEDULE

AGENCY	License # 0757776	NAMED INSURED
HUB International Insurance Services (SOW)		Davenport Construction Management LLC 3201 Mercantile Ct Suite A Santa Fe, NM 87507 Santa Fe
POLICY NUMBER		
SEE PAGE 1		
CARRIER	NAIC CODE	EFFECTIVE DATE: SEE PAGE 1
SEE PAGE 1	SEE P 1	

ADDITIONAL REMARKS

THIS ADDITIONAL REMARKS FORM IS A SCHEDULE TO ACORD FORM,

FORM NUMBER: ACORD 25 FORM TITLE: Certificate of Liability Insurance

Description of Operations/Locations/Vehicles:
City of Santa Fe is included as additional insured regarding general liability and automobile liability on a primary and non-contributory basis. Waiver of Subrogation applies to general liability, automobile liability and workers compensation coverage. 30 Day Notice of Cancellation applies

ACORD 101 (2008/01) © 2008 ACORD CORPORATION. All rights reserved.

The ACORD name and logo are registered marks of ACORD

Workers' Compensation Excellence Since 1987

BUILDERS TRUST®
OF NEW MEXICO

AFFILIATED WITH NEW MEXICO HOME BUILDERS ASSOCIATION

WAIVER OF SUBROGATION

Insured Name: Davenport Construction Management LLC

Workers Compensation Policy #: WC100-0006706-2026A

Address: 3201 Mercantile Ct Suite A

City / State / Zip: Santa Fe NM 87507

Builders Trust of New Mexico waives any right of recovery or subrogation against the certificate holder named on this certificate of insurance, but only to the extent that the employer to whom we provide coverage performs work under a written contract with the certificate holder that requires this waiver.

Certificate Holder:

Certificate Holder Name: City of Santa Fe

Address: PO Box 909

City / State / Zip: Santa Fe, NM 87504

Date: 12/17/25

Emily M. Masarenas
Authorized Representative

Agency: 13

Branch: 1

Agency Name: HUB International Insurance Services, Inc. (SF)

(505) 345-3477 1-800-640-3369 FAX (505) 344-7245
5931 OFFICE BOULEVARD, NE SUITE 3 ALBUQUERQUE, NM 87109 P.O. BOX 91330 ALBUQUERQUE, NM 87109
www.builderstrust.com

BUILDERS TRUST OF NEW MEXICO
ENDORSEMENT TO
WORKERS' COMPENSATION
AND EMPLOYER'S LIABILITY POLICY

30 Day Notice of Cancellation – Effective 1/1/2026

D. Notice of Cancellation

As pertains to the Coverage Agreement, Part Six (6); Section D, Paragraph Two (2), the cancellation notice period is hereby modified to thirty (30) days.

SCHEDULE

Person or Organization (Name and Address)	**Advance Notice (Days)**
City of Santa Fe PO Box 909, Santa Fe, NM 87504	30

All other terms remain unchanged.

Applicable to and forming part of Policy Number WC100-0006706 issued by Builders Trust of New Mexico to Davenport Construction Management LLC dated December 5, 2025.

Authorized Representative

Randy L. Akin

Randy L. Akin, COO

cc: HUB International Insurance Services, Inc. (SF)

THIS ENDORSEMENT CHANGES THE POLICY. PLEASE READ IT CAREFULLY.

DESIGNATED ENTITY – NOTICE OF CANCELLATION OR NONRENEWAL

This endorsement modifies insurance provided under the following:

COMMERCIAL GENERAL LIABILITY COVERAGE PART
COMMERCIAL INLAND MARINE COVERAGE PART
COMMERCIAL PROPERTY COVERAGE PART
LIQUOR LIABILITY COVERAGE PART
OWNERS AND CONTRACTORS PROTECTIVE LIABILITY COVERAGE PART

SCHEDULE *

Person or Organization and Address

City of Santa Fe
PO Box 909
Santa Fe, NM 87504

*** (If no entry appears above, information required to complete this endorsement will be shown in the Declarations or Change Endorsement as applicable to this endorsement.)**

1. If we cancel this policy, we will mail notice of cancellation to the person or organization shown in the Schedule, Declarations or Change Endorsement. Notice will be sent to the address shown in the Schedule, Declarations or Change Endorsement. Except for non-payment of premium, notice will be sent at least 30 days before the effective date of cancellation. If the policy is cancelled for non-payment of premium, notice will be sent at least 10 days before the effective date of cancellation.

2. If we decide not to renew this policy, we will mail notice of nonrenewal to the person or organization shown in the Schedule, Declarations or Change Endorsement. Notice will be sent to the address shown in the Schedule, Declarations or Change Endorsement. Notice will be sent at least 30 days before the effective date of nonrenewal.

3. Failure to send notice of cancellation or nonrenewal, or failure to allow the number of days notice stated above, shall impose no obligation or liability of any kind upon us, our agents or representatives.

THIS ENDORSEMENT CHANGES THE POLICY. PLEASE READ IT CAREFULLY.

AMENDMENT OF PRIMARY AND EXCESS PROVISIONS

This endorsement modifies insurance provided under the following:

COMMERCIAL GENERAL LIABILITY COVERAGE FORM

Any coverage provided hereunder shall be excess over any other valid and collectible insurance available to the additional insured whether primary, excess, contingent or on any other basis unless a contract specifically requires that this insurance be either primary or primary and noncontributing. Where required by contract, we will consider any other insurance maintained by the additional insured for injury or damage covered by this endorsement to be excess and noncontributing with this insurance.

THIS ENDORSEMENT CHANGES THE POLICY. PLEASE READ IT CAREFULLY.

GENERAL LIABILITY PLUS ENDORSEMENT

This endorsement modifies insurance provided under the following:
COMMERCIAL GENERAL LIABILITY COVERAGE PART
This endorsement amends the policy by adding the following; please read each section carefully.

EMPLOYEE BENEFITS LIABILITY COVERAGE
ADDITIONAL INSURED - OWNERS, LESSEES, OR CONTRACTORS - AUTOMATIC STATUS
ADDITIONAL INSURED - MANAGERS OR LESSORS OF PREMISES - AUTOMATIC STATUS
ADDITIONAL INSURED - LESSOR OF LEASED EQUIPMENT - AUTOMATIC STATUS
ADDITIONAL INSURED - VENDORS - AUTOMATIC STATUS
INCLUDE DIRECTORS OR TRUSTEES ON COMMITTEES AS EMPLOYEES
WAIVER OF TRANSFER OF RIGHTS OF RECOVERY AGAINST OTHER TO US
NEWLY FORMED OR ACQUIRED ORGANIZATIONS
NOTICE OF OCCURRENCE, KNOWLEDGE OF OCCURRENCE, UNINTENTIONAL OMISSION
VOLUNTARY PROPERTY DAMAGE
NON-OWNED WATERCRAFT AND NON-OWNED AIRCRAFT LIABILITY
FIRE, SPRINKLER LEAKAGE OR EXPLOSION
POLLUTION COVERAGE FOR UPSET OF MOBILE EQUIPMENT
AGGREGATE LIMITS OF INSURANCE AMENDMENT
SUPPLEMENTARY PAYMENTS - HIGHER LIMITS
REASONABLE FORCE EXPANSION - PROPERTY DAMAGE
LOST KEY COVERAGE
PERSONAL AND ADVERTISING INJURY DEFINITION AMENDED

These modifications are subject to the terms and conditions applicable to coverage in the policy except as provided below.

A. Employee Benefits Liability Coverage

The following is added to Section I - Coverages: EMPLOYEE BENEFITS LIABILITY COVERAGE.

1. Insuring Agreement.

a. We will pay those sums that the insured becomes legally obligated to pay as damages because of any act, error or omission of the insured, or of any other person for whose acts the insured is legally liable, to which this insurance applies. We will have the right and duty to defend the insured against any “suit” seeking those damages. However, we will have no duty to defend the insured against any “suit” seeking damages to which this insurance does not apply. We may, at our discretion, investigate any report of an act, error or omission and settle any “claim” or “suit” that may result. But:

1) The amount we will pay for damages is limited as described in SECTION **III** LIMITS OF INSURANCE for Employee Benefits Liability Coverage and

2) Our right and duty to defend end when we have used up the applicable limit of insurance in the payment of judgments or settlements.

No other obligation or liability to pay sums or perform acts or services is covered unless explicitly provided for under Supplementary Payments.

b. This insurance applies to damages only if:

1) The act, error or omission is negligently committed in the “administration” of your “employee benefit program”;

2) The act, error or omission is caused by an “occurrence” that takes place in the

"coverage territory"; and

3) The act, error or omission occurs during the policy period.

2. Exclusions

This insurance does not apply to:

a. Dishonesty, Fraud Or Criminal Act

Damages arising out of any dishonest, fraudulent, criminal or malicious act or omission, committed by any insured, including the willful or reckless violation of any statute.

b. Bodily Injury, Property Damage, Or Personal And Advertising Injury

"Bodily injury," "property damage" or "personal and advertising injury."

c. Failure To Perform A Contract

Damages arising out of failure of performance of contract by any insurer.

d. Insufficiency Of Funds

Damages arising out of an insufficiency of funds to meet any obligations under any plan included in the "employee benefit program."

e. Inadequacy Of Performance Of Investment/Advice Given To Participate

Any "claim" or "suit" based upon:

1) Failure of any investment to perform;

2) Errors in providing information on past performance of investment vehicles; or

3) Advice given to any person to participate or not to participate in any plan included in the "employee benefit program."

f. Workers Compensation And Similar Laws

Damages arising out of any "claim" related to any workers compensation, unemployment compensation insurance, social security or disability benefits law or any similar law.

g. ERISA

Damages for which the insured is liable because of liability imposed on a fiduciary by the Employee Retirement Income Security Act of 1974, as now or hereafter amended, or any similar federal, state or local laws.

h. Available Benefits

Any "claim" for benefits to the extent that such benefits are available, with reasonable effort and cooperation of the insured, from the applicable funds accrued or other collectible insurance.

i. Taxes, Fines Or Penalties

1) Taxes, fines or penalties, including those imposed under the Internal Revenue Code or any similar state or local law; or

2) Loss or damages arising out of the imposition of such taxes, fines or penalties.

j. Employment-Related Practices

Damages arising out of wrongful termination of employment, discrimination, or other employment-related practices.

3. Supplementary Payments - Coverages A and B

For the purposes of the coverage provided by Employee Benefits Liability Coverage, the Supplementary Payments - Coverages **A** and **B** apply except for Paragraphs **1.b.** and **2.**

SECTION II - WHO IS AN INSURED, Paragraphs **2.** and **3.** are replaced by the following for Employee Benefits Liability Coverage:

2. Each of the following is also an insured:

a. Each of your "employees" who is or was authorized to administer your "employee benefit program."

b. Any persons, organizations or "employees" having proper temporary authorization to administer your "employee benefit program" if you die, but only until your legal representative is appointed.

c. Your legal representative if you die, but only with respect to duties as such. That representative will have all your rights and duties under this Endorsement.

3. Any organization you newly acquire or form, other than a partnership, joint venture or limited liability company, and over which you maintain ownership or majority interest, will qualify as a Named Insured if there is no other similar insurance available to that organization. However:

a. Coverage under this provision is afforded only until the 180th day after you acquire or form the organization or the end of the policy period, whichever is earlier.

b. Coverage under this provision does not apply to any act, error or omission that occurred before you acquired or formed the organization.

SECTION III - LIMITS OF INSURANCE is replaced by the following for the Employee Benefits Liability Coverage:

1) The Limits of Insurance shown below and the rules below fix the most we will pay regardless of the number of:

a) Insureds;

b) "Claims" made or "suits" brought;

c) Persons or organizations making "claims" or bringing "suits";

d) Acts, error or omissions which result in loss; or

e) Benefits included in your "employee benefit program."

2) $2,000,000 is the most we will pay for all damages because of acts, errors or omissions committed in the "administration" of your "employee benefit program."

3) Subject to the above Limit, $1,000,000 is the most we will pay for all damages sustained by any one "employee," including damages sustained by such "employee's" dependents and beneficiaries, as a result of:

a) An act, error or omission; or

b) A series of acts, errors or omissions

negligently committed in the "administration" of your "employee benefit program."

However, the amount paid under this endorsement shall not exceed, and will be subject to, the limits and restrictions that apply to the payment of benefits in any plan included in the "employee benefit program."

The Limits of Insurance of this endorsement apply separately to each consecutive annual period and to any remaining period of less than 12 months, starting with the beginning of the policy period shown in the Declarations of the policy to which this endorsement is attached, unless the policy period is extended after issuance for an additional period of less than 12 months. In that case, the additional period will be deemed part of the last preceding period for purposes of determining the Limits Of Insurance.

4. Deductible

a. Our obligation to pay damages on behalf of the insured applies only to the amount of damages in excess of $1,000. The limits of insurance shall not be reduced by the amount of this deductible.

b. The deductible amount applies to all damages sustained by any one "employee," including such "employee's" dependents and beneficiaries, because of all acts, errors or omissions to which this insurance applies.

c. The terms of this insurance, including those with respect to:

1) Our right and duty to defend any "suits" seeking those damages; and

2) Your duties, and the duties of any other involved insured, in the event of an act, error or omission, "claim" or "suit"

apply irrespective of the application of the deductible amount.

d. We may pay any part or all of the deductible amount to effect settlement of any "claim" or

"suit" and, upon notification of the action taken, you shall promptly reimburse us for such part of the deductible amount as we have paid.

SECTION IV - CONDITIONS, Paragraphs **2.** and **4.** are replaced by the following for the Employee Benefits Liability Coverage:

2. Duties In The Event Of An Act, Error Or Omission, "Claim" Or "Suit"

a. You must see to it that we are notified as soon as practicable of an act, error or omission which may result in a "claim." To the extent possible, notice should include:

1) What the act, error or omission was and when it occurred; and

2) The names and addresses of anyone who may suffer damages as a result of the act, error or omission.

b. If a "claim" is made or "suit" is brought against any insured, you must:

1) Immediately record the specifics of the "claims" or "suit" and the date received; and

2) Notify us as soon as practicable.

You must see to it that we receive written notice of the "claim" or "suit" as soon as practicable.

c. You and any other involved insured must:

1) Immediately send us copies of any demands, notices, summonses or legal papers received in connection with the "claim" or "suit";

2) Authorize us to obtain records and other information;

3) Cooperate with us in the investigation or settlement of the "claim" or defense against the "suit"; and

4) Assist us, upon our request, in the enforcement of any right against any person or organization which may be liable to the insured because of an act, error or omission to which this insurance may also apply.

d. No insured will, except at the insured's own cost, voluntarily make a payment, assume any obligation or incur any expense without our consent.

4. Other Insurance

If other valid and collectible insurance is available to the insured for a loss we cover under this endorsement, our obligations are limited as follows:

a. Primary Insurance

This insurance is primary except when **b.** below applies. If this insurance is primary, our obligations are not affected unless any of the other insurance is also primary. Then, we will share with all that other insurance by the method described in **c.** below.

b. Excess Insurance

Any other primary insurance available to you covering acts, errors or omissions for which you have been added as an additional insured.

When this insurance is excess, we will have no duty to defend the insured against any "suit" if any other insurer has a duty to defend the insured against that "suit." If no other insurer defends, we may undertake to do so, but we will be entitled to the insured's rights against all those other insurers.

When this insurance is excess over other insurance, we will pay only our share of the amount of the loss, if any, that exceeds the sum of:

1) The total amount that all such other insurance would pay for the loss in absence of this insurance; and

2) The total of all deductible and self-insured amounts under all that other insurance.

We will share the remaining loss, if any, with any other insurance that is not described in this Excess Insurance provision and was not bought specifically to apply in excess of the Limits of Insurance shown.

c. Method Of Sharing

If all of the other insurance permits contribution by equal shares, we will follow this method also. Under this approach each insurer contributes equal amounts until it has paid its applicable limit of insurance or none of the loss remains, whichever comes first.

If any of the other insurance does not permit contribution by equal shares, we will contribute by limits. Under this method, each insurer's share is based on the ratio of its applicable limits of insurance of all insurers.

SECTION V - DEFINITIONS is amended by adding the following definitions for Employee Benefits Liability Coverage:

1. "Administration" means:

a. Providing information to "employees," including their dependents and beneficiaries, with respect to eligibility for or scope of "employee benefit programs";

b. Handling records in connection with the "employee benefit program"; or

c. Effecting, continuing or terminating any "employee's" participation in any benefit included in the "employee benefit program."

However, "administration" does not include handling payroll deductions.

2. "Cafeteria plans" means plans authorized by the applicable law to allow employees to elect to pay for certain benefits with pre-tax dollars.

3. "Claim" means any demand, or "suit," made by an "employee" or an "employee's" dependents and beneficiaries, for damages as the result of an act, error or omission.

4. "Employee benefit program" means a program providing some or all of the following benefits to "employees," whether provided through a "cafeteria plan" or otherwise.

a. Group life insurance; group accident or health insurance; dental, vision and hearing plans; and flexible spending accounts; provided that no one other than an "employee" may subscribe to such benefits and such benefits are made generally available to those "employees" who satisfy the plan's eligibility requirements;

b. Profit sharing plans, employee savings plans, employee stock ownership plans, pension plans and stock subscription plans, provided that no one other than an "employee" may subscribe to such benefits and such benefits are made generally available to all "employees" who are eligible for such benefits;

c. Unemployment insurance, social security benefits, workers compensation and disability benefits;

d. Vacation plans, including buy and sell programs; leave of absence programs, including military, maternity, family, and civil leave; tuition assistance plans; transportation and health club subsidies.

SECTION V - DEFINITIONS - the definition of "employee" and "suit" is replaced for Employee Benefits Liability Coverage by the following:

"Employee" means a person actively employed, formerly employed, on leave of absence or disabled, or retired. "Employee" includes a "leased worker." "Employee" does not include a "temporary worker."

"Suit" means a civil proceeding in which damages because of an act, error or omission to which this insurance applies are alleged. "Suit" includes:

a. An arbitration proceeding in which such damages are claimed and to which the insured must submit or does submit with our consent; or

b. Any other alternative dispute resolution proceeding in which such damages are claimed and to which the insured submits with our consent.

B. Additional Insured - Owners, Lessees, or Contractors - Automatic Status (not applicable to Employee Benefits Liability Coverage)

1. Section **II** - Who Is An Insured is amended to include as an additional insured any person or

organization for whom you are performing operations when you and such person or organization have agreed in writing in a contract or agreement that such person or organization be added as an additional insured on your policy and any other person or organization you are required to add as an additional insured under the contract or agreement. Such person or organization is an additional insured only with respect to liability for "bodily injury," "property damage" or "personal and advertising injury" caused, in whole or in part, by:

a. Your acts or omissions; or

b. The acts or omissions of those acting on your behalf;

in the performance of your ongoing operations for the additional insured.

Except as provided for in the exception to **2.b.** below, a person's or organization's status as an additional insured under this endorsement ends when your operations for that additional insured are completed.

However, the insurance afforded to such additional insured described above:

a. only applies to the extent permitted by law; and

b. will not be broader than that which you are required by the contract or agreement to provide for such additional insured.

2. With respect to the insurance afforded to these additional insureds, the following additional exclusions apply:

This insurance does not apply to:

a. "Bodily injury," "property damage" or "personal and advertising injury" arising out of the rendering of, or the failure to render, any professional architectural, engineering or surveying services, including:

1) The preparing, approving, or failing to prepare or approve, maps, shop drawings, opinions, reports, surveys, field orders, change orders or drawings and specifications; or

2) Supervisory, inspection, architectural or engineering activities.

This exclusion applies even if the claims against any insured allege negligence or other wrongdoing in the supervision, hiring, employment, training or monitoring of others by that insured, if the "occurrence" which caused the "bodily injury" or "property damage", or the offense which caused the "personal and advertising injury", involved the rendering of, or failure to render, any professional architectural, engineering or surveying services.

b. "Bodily injury" or "property damage" occurring after:

1) All work, including materials, parts or equipment furnished in connection with such work, on the project (other than service, maintenance or repairs) to be performed by or on behalf of the additional insured(s) at the location of the covered operations has been completed; or

2) That portion of "your work" out of which the injury or damage arises has been put to its intended use by any person or organization other than another contractor or subcontractor engaged in performing operations for a principal as a part of the same project.

However, exclusion **b.** does not apply when in conflict with the requirements of a written contract or agreement.

3. The most we will pay on behalf of the additional insured is the amount of insurance required by the contract or agreement you have entered into with the additional insured or the amount of insurance available under the applicable Limits of Insurance shown in the Declarations or Change Endorsement, whichever is less. These Limits of Insurance are inclusive and not in addition to the Limits of Insurance shown in the Declarations or Change Endorsement.

C. Additional Insured - Managers or Lessors of Premises - Automatic Status (not applicable to Employee Benefits Liability Coverage)

1. Section **II** - Who Is An Insured is amended to include as an insured any person or organization when you and such person or organization have agreed in writing in a contract or agreement that such

person or organization be added as an additional insured on your policy, but only with respect to liability arising out of the ownership, maintenance or use of that part of the premises leased to you and subject to the following additional exclusions:

This insurance does not apply to:

a. Any "occurrence" which takes place after you cease to be a tenant in that premises.

b. Structural alterations, new construction or demolition operations performed by or on behalf of the additional insured.

However, the insurance afforded to such additional insured described above:

a. only applies to the extent permitted by law; and

b. will not be broader than that which you are required by the contract or agreement to provide for such additional insured.

2. The most we will pay on behalf of the additional insured is the amount of insurance required by the contract or agreement you have entered into with the additional insured or the amount of insurance available under the applicable Limits of Insurance shown in the Declarations or Change Endorsement, whichever is less. These Limits of Insurance are inclusive and not in addition to the Limits of Insurance shown in the Declarations or Change Endorsement.

D. Additional Insured - Lessor of Leased Equipment - Automatic Status (not applicable to Employee Benefits Liability Coverage)

1. Section **II** - Who Is An Insured is amended to include as an additional insured any person or organization from whom you lease equipment when you and such person or organization have agreed in writing in a contract or agreement that such person or organization be added as an additional insured on your policy. Such person or organization is an insured only with respect to liability for "bodily injury," "property damage" or "personal and advertising injury" caused, in whole or in part, by your maintenance, operation or use of equipment leased to you by such person or organization.

However, the insurance afforded to such additional insured described above:

a. only applies to the extent permitted by law; and

b. will not be broader than that which you are required by the contract or agreement to provide for such additional insured.

A person's or organization's status as an additional insured under this endorsement ends when their contract or agreement with you for such leased equipment ends.

2. With respect to the insurance afforded to these additional insureds, this insurance does not apply to any "occurrence" which takes place after the equipment lease expires.

3. The most we will pay on behalf of the additional insured is the amount of insurance required by the contract or agreement you have entered into with the additional insured or the amount of insurance available under the applicable Limits of Insurance shown in the Declarations or Change Endorsement, whichever is less. These Limits of Insurance are inclusive and not in addition to the Limits of Insurance shown in the Declarations or Change Endorsement.

E. Additional Insured - Vendors - Automatic Status (not applicable to Employee Benefits Liability Coverage)

1. Section **II** - Who Is An Insured is amended to include as an insured any person or organization (referred to below as vendor) when you and such person or organization have agreed in writing in a contract or agreement that such person or organization be added as an additional insured on your policy, but only with respect to "bodily injury" or "property damage" arising out of "your products" shown in the Schedule, Declarations or Change Endorsement which are distributed or sold in the regular course of the vendor's business.

However, the insurance afforded to such additional insured described above:

a. only applies to the extent permitted by law; and

b. will not be broader than that which you are required by the contract or agreement to provide for such additional insured.

2. With respect to the insurance afforded to these vendors, the following additional exclusions apply:

a. "Bodily injury" or "property damage" for which the vendor is obligated to pay damages by reason of the assumption of liability in a contract or agreement. This exclusion does not apply to liability for damages that the vendor would have in the absence of the contract or agreement;

b. An express warranty unauthorized by you;

c. Any physical or chemical change in the product made intentionally by the vendor;

d. Repackaging, except when unpacked solely for the purpose of inspection, demonstration, testing, or the substitution of parts under instructions from the manufacturer, and then repackaged in the original container;

e. Any failure to make such inspections, adjustments, tests or servicing as the vendor has agreed to make or normally undertakes to make in the usual course of business, in connection with the distribution or sale of the products;

f. Demonstration, installation, servicing or repair operations, except such operations performed at the vendor's premises in connection with the sale of the product;

g. Products which, after distribution or sale by you, have been labeled or relabeled or used as a container, part or ingredient of any other thing or substance by or for the vendor; or

h. "Bodily injury" or "property damage" arising out of the sole negligence of the vendor for its own acts or omissions or those of its employees or anyone else acting on its behalf. However, this exclusion does not apply to:

1) The exceptions contained in Sub-paragraphs **d.** or **f.**; or

2) Such inspections, adjustments, tests or servicing as the vendor has agreed to make or normally undertakes to make in the usual course of business, in connection with the distribution or sale of the products.

3. This insurance does not apply to any insured person or organization, from whom you have acquired such products, or any ingredient, part or container, entering into, accompanying or containing such products.

4. The most we will pay on behalf of the vendor is the amount of insurance required by the contract or agreement you have entered into with the additional insured or the amount of insurance available under the applicable Limits of Insurance shown in the Declarations or Change Endorsement, whichever is less. These Limits of Insurance are inclusive and not in addition to the Limits of Insurance shown in the Declarations or Change Endorsement.

F. Include Directors Or Trustees On Committees As Employees (not applicable to Employee Benefits Liability Coverage)

SECTION V - DEFINITIONS is amended by the addition of the following to definition **5.**:

"Employee" also includes any of your directors or trustees acting as a member of any of your elected or appointed committees to perform on your behalf specific, as distinguished from general, directorial acts.

G. Waiver Of Transfer Of Rights Of Recovery Against Others To Us

The TRANSFER OF RIGHTS OF RECOVERY AGAINST OTHERS TO US, SECTION **IV** CONDITION **8.**, is
amended by the addition of the following:

We waive any right of recovery we may have against any person or organization because of payments we make for injury or damage arising out of your ongoing operations or "your work" done under a contract with that person or organization and included in the "products-completed operations hazard." This waiver applies only to the person or organization which, before the loss, you have agreed in writing to waive your right of recovery.

H. Newly Formed Or Acquired Organizations (not applicable to Employee Benefits Liability Coverage)

SECTION II - WHO IS AN INSURED is amended to include any organization you newly acquire or form, other than a partnership or joint venture, and over which you maintain ownership or majority interest, will qualify as a Named Insured if there is no other similar insurance available to that organization. However:

1. Coverage under this provision is afforded only until 180 days after you acquire or form the organization or the end of the policy period, whichever is earlier.

2. Coverage A does not apply to "bodily injury" or "property damage" that occurred before you acquired or formed the organization; and

3. Coverage B does not apply to "personal injury and advertising injury" arising out of an offense committed before you acquired or formed the organization.

I. Notice Of Occurrence, Knowledge Of Occurrence, Unintentional Omission

The following is added to SECTION IV.2. - DUTIES IN THE EVENT OF OCCURRENCE, OFFENSE, CLAIM OR SUIT:

e. Notice of Accident/Occurrence

When you report to your Workers Compensation carrier the occurrence of any accident which later develops into a liability claim covered under this policy, failure to report the accident to us at the time of occurrence is not in violation of the Conditions of this policy. However, as soon as you are definitely made aware of the fact that the particular accident is a liability claim rather than a Workers Compensation claim prompt notification must be given to us.

f. Unintentional Errors and Omissions

The insurance afforded by this policy is not invalidated by any unintentional errors, omissions or improper description of premises or your unintentional failure to disclose all hazards existing at inception date of the policy.

g. Knowledge of Accident/Occurrence

Knowledge of an accident/occurrence by your agent, servant or employee is not knowledge by you unless an executive officer of your Corporation received such notice from its agent, servant or employee.

J. Voluntary Property Damage

1. We will pay, at your request, for loss due to "Property Damage" to property of others caused by you, or while in your possession, arising out of your business operations.

2. "Loss" means unintentional damage or destruction but does not include disappearance, theft, or loss of use.

3. Limits of Insurance - The most we will pay for "loss" under the Voluntary Property Damage is **$2,500** for each "occurrence." The most we will pay for the sum of all damages because of "Property Damage" is an annual policy aggregate limit of **$25,000.**

4. Deductible - We will not pay for "loss" in any one "occurrence" until the amount of "loss" exceeds **$250.**

We may pay any part or all of the deductible amount to effect settlement of any "claim" or "suit" and, upon notification of the action taken, you shall promptly reimburse us for such part of the deductible amount as we have paid.

5. The insurance under the Voluntary Property Damage shall not apply:

a. To "loss" of property at premises owned, rented, leased, operated, or used by you;

b. To "loss" of property while in transit;

c. To "loss" of property owned by, rented to, leased to, borrowed by or used by you;

d. To the cost of repairing or replacing (1) any work defectively or incorrectly done, (2) any product manufactured, sold or supplied by you, unless the "Property Damage" is caused directly by you after delivery of the product or completion of the work and resulting from a subsequent undertaking;

e. To "loss" of property included within the "Products/Completed Operations Hazard";

f. To "loss" of property which is an "auto" or "mobile equipment."

g. To "loss" of property caused by "pollutants."

6. In the event of "loss" covered by this endorsement, you shall, if requested by us, replace the property or furnish the labor and materials necessary for repairs thereto at your actual cost, excluding profit or overhead charges.

K. Non-Owned Watercraft And Non-Owned Aircraft Liability

SECTION I - COVERAGE A, exclusion 2.g. is replaced by the following:

g. "Bodily injury" or "property damage" arising out of the ownership, maintenance, use or entrustment to others of any aircraft, "auto" or watercraft owned or operated by or rented or loaned to any insured. Use includes operation and "loading or unloading." This exclusion applies even if the claims against any insured allege negligence or other wrongdoing in the supervision, hiring, employment, training or monitoring of others by that insured, if the "occurrence" which caused the "bodily injury" or "property damage" involved the ownership, maintenance, use or entrustment to others of any aircraft, "auto" or watercraft that is owned or operated by or rented or loaned to any insured.

This exclusion does not apply to:

1) A watercraft while ashore on premises you own or rent;

2) A watercraft you do not own that is:

a) Less than 60 feet long; and

b) Not being used to carry persons or property for a charge;

3) Parking an "auto" on, or on the ways next to, premises you own or rent, provided the "auto" is not owned by or rented or loaned to you or the insured;

4) Liability assumed under any "insured contract" for the ownership, maintenance or use of aircraft or watercraft; or

5) "Bodily injury" or "property damage" arising out of:

a) The operation of machinery or equipment that is attached to, or part of, a land vehicle that would qualify under the definition of "mobile equipment" if it were not subject to a compulsory or financial responsibility law or other motor vehicle insurance law where it is licensed or principally garaged; or

b) The operation of any of the machinery or equipment listed in paragraph f.2) or f.3) of the definition of "mobile equipment."

6) An aircraft you do not own provided it is not operated by any insured.

L. Fire, Sprinkler Leakage Or Explosion

1. SECTION I - GENERAL LIABILITY COVERAGES is amended as follows:

a. The last paragraph of **2. Exclusions** under **A. Bodily Injury and Property Damage Liability** is replaced by the following:
Exclusions c. through q. do not apply to damage by fire, sprinkler leakage or explosion to premises while rented to you or temporarily occupied by you with permission of the owner.
A separate limit of insurance applies to this coverage as described in Section III - Limits of Insurance.
But the Limit for Damage to Premises Rented To You shown in the Declaration will apply to all damage proximately caused by the same event, whether such damage results from fire, sprinkler leakage or explosion or any combination of the three.

b. **Section III - Limits of Insurance** is amended to replace paragraph 6. with the following:

6. Subject to Paragraph 5. above, the Damage To Premises Rented to You Limit is the most we will pay under Paragraph A. Bodily Injury And Property Damage Liability for damages because of "property damage" to any one premises, while rented to you, or in the case of damage by fire, sprinkler leakage, or explosion, while rented to you or temporarily occupied by you with permission of the owner.

But the Limit of Insurance shown in the Declaration will apply to all damage proximately caused by the same event whether such damage results from fire, sprinker leakage or explosion or any combination of the three.

2. The Damage to Premises Rented To You Limit is $300,000 unless a higher limit is shown on the declaration or change endorsement.

3. Paragraph 4.b. of the Other Insurance is amended as follows:
The term "Fire" in Paragraph B. (1)(a)(i) is replaced by "Fire, Sprinkler Leakage, or Explosion"

4. Section 9.a. under SECTION V - DEFINITIONS is amended as follows:
The term "fire" is replaced by "fire, sprinkler leakage, or explosion"

M. Pollution Coverage For Upset Of Mobile Equipment

The Insuring Agreement for “property damage” liability with respect to your operations is extended as follows:

1. We will pay those sums which you become legally obligated to pay for “property damage” cause directly by immediate, abrupt and accidental upset, overturn or collision of your “mobile equipment” while transporting “pollutants” which are intended for and normally used in your operations. The operations must be in compliance with local, state, and federal ordinances and laws.

2. EXCLUSIONS

a. With regard only to the coverage provided by this extension K., SECTION I - COVERAGES, COVERAGE A. BODILY INJURY AND PROPERTY DAMAGE LIABILITY, 2. Exclusions, f. is deleted and replaced by the following for this extension only:

f. Pollution

Any loss, cost or expense arising out of any:

1) Request, demand, order or statutory or regulatory requirement that any insured or others test for, monitor, clean up, remove, contain, treat, detoxify or neutralize, or in any way respond to, or assess the effects of, “pollutants”; or

2) Claim or suit by or on behalf of a governmental authority for damages because of testing for, monitoring, cleaning up, removing, containing, treating, detoxifying or neutralizing, or in any way responding to, or assessing the effects of “pollutants.”

3) Premises, site or location which is or was at any time owned, rented or loaned to any insured.

N. Aggregate Limits Of Insurance (not applicable to Employee Benefits Liability Coverage)

The General Aggregate Limit under SECTION III - LIMITS OF INSURANCE, Paragraph 2. applies separately to each of your “location(s)” owned by or rented to you or “project(s)” away from “location(s)” owned by or rented to you.

“Location” and/or “project” means premises involving the same or connecting lots, or premises whose connection is interrupted only by a street, roadway, waterway or right-of-way of a railroad.

O. Supplementary Payments - Higher Limits

Under SECTION I - SUPPLEMENTARY PAYMENTS - COVERAGES A AND B:

Paragraph **1.b.** is replaced by the following:
Up to $2000 for cost of bail bonds required because of accidents or traffic law violations arising out of the use of any vehicle to which the Bodily Injury Liability Coverage applies. We do not have to furnish these bonds.

Paragraph **1.d.** is replaced by the following:

All reasonable expenses incurred by the insured at our request to assist us in the investigation or defense of the claim or “suit,” including actual loss of earnings up to $400 a day because of time off from work.

P. Reasonable Force Expansion - Property Damage

Exclusion 2.a. of Coverage A is replaced with the following:

a. Expected Or Intended Injury

“Bodily injury” or “property damage” expected or intended from the standpoint of the insured. This

exclusion does not apply to “bodily injury” or “property damage” resulting from the use of reasonable force to protect persons or property.

Q. Lost Key Coverage

1. SECTION I - COVERAGES

COVERAGE A. BODILY INJURY AND PROPERTY DAMAGE LIABILITY

Exclusion **2.j.4)** Personal property in the care, custody or control of the insured is amended to add:

However, coverage for property of others in the care, custody or control of the insured is provided for the loss of keys which are in the possession of the insured or his “employees” subject to the following additional provisions:

a. The insurance afforded with respect to Lost Key Coverage shall not apply to “property damage” caused by misappropriation, secretion, conversion, infidelity or any dishonest act on the part of any insured or his employees or agents;

b. Our liability for all damages because of “property damage” to which this coverage applies shall be limited to the actual cost of keys, adjustment of locks to accept new keys or, if required, new locks including cost of their installation. Subject to such limitation, our total liability for all damages as the result of any one occurrence shall not exceed $25,000. Each claim is subject to a $250 deductible.

2. SECTION II - WHO IS AN INSURED

The following is added to item **2.a.2)b):**

However, coverage is provided for the loss of keys which are in the possession of the insured or his“employees,” subject to the following additional provisions:

a. The insurance afforded with respect to Lost Key Coverage shall not apply to “property damage” caused by misappropriation, secretion, conversion, infidelity or any dishonest act on the part o any insured or his “employees” or agents;

b. Our liability for all damages because of “property damage” to which this coverage applies shall be limited to the actual cost of keys, adjustment of locks to accept new keys or, if required, new locks including cost of their installation. Subject to such limitation, our total liability for all damages as the result of any one occurrence shall not exceed $25,000. Each claim is subject to a $250 deductible.

R. Personal and Advertising Injury Definition

Under SECTION V – DEFINITIONS, 14.c. is replaced with the following:

The wrongful eviction from, wrongful entry into, or invasion of the right of private occupancy of a room, dwelling or premises that a person or organization occupies, committed by or on behalf of its owner, landlord or lessor.

S. The following is added to SECTION IV - COMMERCIAL GENERAL LIABILITY CONDITIONS, 4. OTHER INSURANCE:

When this General Liability Plus endorsement provides coverage and such coverage is also provided by any other provision of this policy:

a. There shall be no duplication of the Limits of Insurance.

b. Any loss payment made under such other provisions shall reduce by such loss payments the Limits of Insurance available under the General Liability Plus endorsement.

T. SECTION IV - COMMERCIAL GENERAL LIABILITY CONDITIONS is amended by adding:

LIBERALIZATION

If we adopt a change in our Comprehensive General Liability Coverage forms or rules that would broaden the coverage without extra charge, the broader coverage will apply to this Coverage Form. It will apply when the change becomes effective in your state.

THIS ENDORSEMENT CHANGES THE POLICY. PLEASE READ IT CAREFULLY.

DESIGNATED ENTITY - NOTICE OF CANCELLATION OR NONRENEWAL

This endorsement modifies insurance provided under the following:

AUTO DEALERS COVERAGE FORM
BUSINESS AUTO COVERAGE FORM
MOTOR CARRIER COVERAGE FORM

SCHEDULE *

Person or Organization and Address

City of Santa Fe
PO Box 909
Santa Fe, NM 87504

*** (Information required to complete this endorsement, if not shown above, will be shown in the Declarations or Change Endorsement.)**

1. If we cancel this policy, we will mail notice of cancellation to the person or organization shown in the Schedule, Declarations or Change Endorsement. Notice will be sent to the address shown in the Schedule, Declarations or Change Endorsement. Notice will be sent in accordance with the insured notification requirements per state statute.

2. If we decide not to renew this policy, we will mail notice of nonrenewal to the person or organization shown in the Schedule, Declarations or Change Endorsement. Notice will be sent to the address shown in the Schedule, Declarations or Change Endorsement. Notice will be sent in accordance with the insured notification requirements per state statute.

3. Failure to send notice of cancellation or nonrenewal, or failure to allow the number of days notice stated above, shall impose no obligation or liability of any kind upon us, our agents or representatives.

THIS ENDORSEMENT CHANGES THE POLICY. PLEASE READ IT CAREFULLY.

PRIMARY AND NONCONTRIBUTORY – OTHER INSURANCE CONDITION

This endorsement modifies insurance provided under the following:

AUTO DEALERS COVERAGE FORM
BUSINESS AUTO COVERAGE FORM
MOTOR CARRIER COVERAGE FORM

With respect to coverage provided by this endorsement, the provisions of the Coverage Form apply unless modified by the endorsement.

A. The following is added to the **Other Insurance** Condition in the Business Auto Coverage Form and the **Other Insurance – Primary And Excess Insurance Provisions** in the Motor Carrier Coverage Form and supersedes any provision to the contrary:

This Coverage Form's Covered Autos Liability Coverage is primary to and will not seek contribution from any other insurance available to an "insured" under your policy provided that:

1. Such "insured" is a Named Insured under such other insurance; and

2. You have agreed in writing in a contract or agreement that this insurance would be primary and would not seek contribution from any other insurance available to such "insured".

B. The following is added to the **Other Insurance** Condition in the Auto Dealers Coverage Form and supersedes any provision to the contrary:

This Coverage Form's Covered Autos Liability Coverage and General Liability Coverages are primary to and will not seek contribution from any other insurance available to an "insured" under your policy provided that:

1. Such "insured" is a Named Insured under such other insurance; and

2. You have agreed in writing in a contract or agreement that this insurance would be primary and would not seek contribution from any other insurance available to such "insured".

 Copyright, Insurance Services Office, Inc., 2016

THIS ENDORSEMENT CHANGES THE POLICY. PLEASE READ IT CAREFULLY.

BAP PLUS COVERAGE ENDORSEMENT

This endorsement modifies insurance provided under the:

BUSINESS AUTO COVERAGE FORM

These coverages are subject to the terms and conditions applicable to coverage in this policy except as provided below.

A. Hired Auto Physical Damage Coverage

1. If hired "autos" are covered "autos" for Liability Coverage in this policy or another policy provided by us and if Comprehensive, Specified Causes of Loss or Collision coverages are provided under this coverage form for any "auto" you own, then the Physical Damage Coverages provided are extended to "autos" you hire, subject to the following limit.

The most we will pay for "loss" to any hired "auto" is **$75,000** or Actual Cash Value or Cost of Repair, whichever is smallest, minus a deductible. The deductible will be equal to the largest deductible applicable to any owned "auto" for that coverage. No deductible applies to "loss" caused by fire or lightning. Subject to the above limit, and deductible, we will provide coverage equal to the broadest coverage applicable to any covered "auto" you own.

2. Changes In Liability Coverage:

The following is added to the Who Is An Insured Provision:

An "employee" of yours is an "insured" while operating an "auto" hired or rented under a contract or agreement in that "employee's" name, with your permission, while performing duties related to the conduct of your business.

3. Changes In General Conditions:

Paragraph **5.b.** of the Other Insurance Condition in the Business Auto and Business Auto Physical Damage Coverage Forms are replaced by the following:

For Hired Auto Physical Damage Coverage, the following are deemed to be covered "autos" you own:

1. Any covered "auto" you lease, hire, rent or borrow; and

2. Any covered "auto" hired or rented by your "employee" under a contract in that individual "employee's" name, with your permission, while performing duties related to the conduct of your business.

However, any "auto" that is leased, hired, rented or borrowed with a driver is not a covered "auto."

B. Hired Auto Physical Damage - Additional Loss of Use Expenses

Paragraph **A.4.b.** of **SECTION III -PHYSICAL DAMAGE COVERAGE** is amended to provide a limit of **$85 per day** and a **maximum limit of $1,350.**

C. Physical Damage - Additional Transportation Expense Coverage

Paragraph **A.4.a.** of **SECTION III - PHYSICAL DAMAGE COVERAGE** is amended to provide a limit of **$50 per day** and a **maximum limit of $1,000.**

D. Towing and Labor Costs Coverage

We will pay up to $200 for towing and labor costs incurred each time an owned "auto" is disabled. However, the labor must be performed at the place of disablement.

E. Parked Auto Collision Coverage (Waiver of Deductible) The deductible does not apply to "loss" caused by collision to such covered "auto" while it is:

1. In the charge of an "insured";

2. Legally parked; and

3. Unoccupied.

The total amount of the damage to the covered “auto” must exceed the deductible shown in the Declarations or Change Endorsement.

This provision does not apply to any “loss” if the covered “auto” is in the charge of any person or organization engaged in the automobile business.

F. Rental Reimbursement Coverage

When there is a “loss” to a covered “auto,” we will pay for rental reimbursement expenses incurred by you for the rental of an “auto.” Payment applies in addition to the otherwise applicable amount of each coverage you have on a covered “auto.” No deductibles apply to this coverage.

This coverage applies only:

1. For those expenses incurred during the policy period beginning 24 hours after the loss;

2. To necessary and actual expenses incurred;

3. To a “loss” for which we also pay a “loss” under Physical Damage Coverage - Comprehensive Coverage, Specified Causes of Loss Coverage or Collision Coverage; and

4. If there are no spare or reserve “autos” available to you for your operations.

Our payment will be limited to that period of time reasonably required to repair or replace the covered “auto.” We will pay up to **$75 per day** to a **maximum of $1,500.** If “loss” results from total theft of a covered “auto” we will pay under this coverage only that amount of rental reimbursement expenses which are not already provided under the Physical Damage Coverage Extension.

G. Difference in Value Coverage - Loan/Lease Gap

1. PHYSICAL DAMAGE COVERAGE, is amended by the addition of the following:

a. In the event of a total “loss” to a covered “auto”, we will pay any unpaid amount due on the lease or loan for a covered “auto”, less:

1) The amount paid under the Policy's Physical Damage Coverage; and

2) Any:

i) Overdue or any deferred loan/lease payments at the time of "loss";

ii) Financial penalties imposed under the lease for excessive use, abnormal wear and tear or high mileage;

iii) Security deposits not returned by the lessor;

iv) Costs for extended warranties, Credit Life Insurance, Health, Accident or Disability Insurance purchased with the loan or lease; and

v) Carry-over balances from previous loans or leases.

For the purposes of this endorsement, the following is added to the Other Insurance Condition in the Business Auto Coverage Form:

The insurance provided by this Auto Loan/Lease GAP Coverage is excess over any other collectible insurance including but not limited to any coverage provided by or purchased from the lessor or any financial institution.

H. Glass Repair - Waiver of Deductible

Under Paragraph **D. - Deductible of SECTION III - PHYSICAL DAMAGE COVERAGE**, the following is added:

No deductible applies to the cost of repairing or replacing damaged glass.

I. Employees as Insureds Paragraph **A.1 - Who is an Insured of SECTION II - COVERED AUTOS LIABILITY COVERAGE** is amended to add:

d. Any employee of yours while using a covered “auto” you don't own, hire or borrow in your business or your personal affairs. Coverage is excess over any other collectible insurance.

J. Fellow Employee Coverage

The Fellow Employee Exclusion contained in **SECTION II - COVERED AUTOS LIABILITY COVERAGE** does not apply.

K. Doubled Automobile Medical Payments Coverage

If you have purchased Automobile Medical Payments Coverage, the limit of insurance for that coverage as shown in the Declarations or Change Endorsement will be doubled in the event an "insured" is injured in an "accident" while within an "auto" and is:

1. Wearing a seat belt; or

2. The "auto" is equipped with passive restraints.

L. Waiver Of Transfer Of Rights Of Recovery Against Others To Us

The **TRANSFER OF RIGHTS OF RECOVERY AGAINST OTHERS TO US, SECTION IV CONDITION 5.,** is amended by the addition of the following:

The Transfer Of Rights Of Recovery Against Others To Us Condition does not apply to any person(s) or organization(s) for whom you are required to waive subrogation with respect to the coverage provided under this Coverage Form, but only to the extent that subrogation is waived:

1. Under a written contract or agreement with such person(s) or organization(s); and

2. Prior to the "accident" or the "loss".

M. Additional Insured - Automatic Status

1. Any "leased auto" will be considered a covered "auto" you own and not a covered "auto" you hire or borrow.

2. Paragraph **A.1 - Who is an Insured of SECTION II - COVERED AUTOS LIABILITY COVERAGE** is amended to include as an insured any person or organization (called additional insured) whom you are required to add as an additional insured on this policy under:

A written contract, permit or agreement, and

a. Currently in effect or becoming effective during the term of this policy; and

b. Executed prior to the "bodily injury," "property damage," "personal injury and advertising injury."

3. The insurance provided to the additional insured is limited as follows:

a. The Limits of Insurance applicable to the additional insured are those specified in the written contract or agreement or in the Declarations for this policy, whichever is less. These Limits of Insurance are inclusive and not in addition to the Limits of Insurance shown in the Declarations.

4. Additional Definition

As used in this endorsement:

"Leased auto" means an "auto" leased or rented to you, including any substitute, replacement or extra "auto" needed to meet seasonal or other needs, under a leasing or rental agreement that requires you to provide direct primary insurance for the lessor.

N. Loss Payee - Lessor

1. We will pay, as interest may appear, you and the lessor for "loss" to a "leased auto."

2. The insurance covers the interest of the lessor unless the "loss" results from fraudulent acts or omission on your part.

3. If we make any payment to the lessor, we will obtain his or her rights against any other party.

4. Additional Definition

As used in this endorsement:

"Leased auto" means an "auto" leased or rented to you, including any substitute, replacement or extra "auto" needed to meet seasonal or other needs, under a leasing or rental agreement that requires you to provide direct primary insurance for the lessor.

O. Tapes, Records and Discs Coverage SECTION III - PHYSICAL DAMAGE COVERAGE is amended as follows:

1. The exclusion referring to tapes, records, discs or other similar audio, visual or data electronic devices designed for use with audio, visual or data electronic equipment does not apply.

2. The following is added to Paragraph A. Coverage:

Under Comprehensive Coverage we will pay for “loss” to tapes, records, discs or other similar devices used with audio, visual or data electronic equipment. We will pay only if the tapes, records, discs or other similar audio, visual or data electronic devices:

a. Are your property or that of a family member, and

b. Are in a covered “auto” at the time of “loss.”

3. The most we will pay for “loss” is $250.

4. No Physical Damage Coverage deductible applies to this coverage.

P. Audio, Visual and Data Electronic Equipment Coverage

SECTION III - PHYSICAL DAMAGE COVERAGE is amended as follows:

1. The sublimit in Paragraph **C.1.b**. of the Limit Of Insurance provision is increased to $2,500.

ACORD

CERTIFICATE OF LIABILITY INSURANCE

DATE (MM/DD/YYYY) 12/24/2025

THIS CERTIFICATE IS ISSUED AS A MATTER OF INFORMATION ONLY AND CONFERS NO RIGHTS UPON THE CERTIFICATE HOLDER. THIS CERTIFICATE DOES NOT AFFIRMATIVELY OR NEGATIVELY AMEND, EXTEND OR ALTER THE COVERAGE AFFORDED BY THE POLICIES BELOW. THIS CERTIFICATE OF INSURANCE DOES NOT CONSTITUTE A CONTRACT BETWEEN THE ISSUING INSURER(S), AUTHORIZED REPRESENTATIVE OR PRODUCER, AND THE CERTIFICATE HOLDER.

IMPORTANT: If the certificate holder is an ADDITIONAL INSURED, the policy(ies) must have ADDITIONAL INSURED provisions or be endorsed. If SUBROGATION IS WAIVED, subject to the terms and conditions of the policy, certain policies may require an endorsement. A statement on this certificate does not confer rights to the certificate holder in lieu of such endorsement(s).

PRODUCER License # 0757776 HUB International Insurance Services (SOW) 6565 Americas Parkway Suite 720 Albuquerque, NM 87110	CONTACT NAME: PHONE (A/C, No, Ext): (505) 828-4000 FAX (A/C, No): (866) 487-3972 E-MAIL ADDRESS:
INSURED B & D Industries, Inc. 9720 Bell Ave SE Albuquerque, NM 87123	INSURER A : Valley Forge Insurance Company — NAIC # 20508 INSURER B : National Fire Insurance Company of Hartford — 20478 INSURER C : The Continental Insurance Company — 35289 INSURER D : Builders Trust of New Mexico INSURER E : INSURER F :

COVERAGES **CERTIFICATE NUMBER:** **REVISION NUMBER:**

THIS IS TO CERTIFY THAT THE POLICIES OF INSURANCE LISTED BELOW HAVE BEEN ISSUED TO THE INSURED NAMED ABOVE FOR THE POLICY PERIOD INDICATED. NOTWITHSTANDING ANY REQUIREMENT, TERM OR CONDITION OF ANY CONTRACT OR OTHER DOCUMENT WITH RESPECT TO WHICH THIS CERTIFICATE MAY BE ISSUED OR MAY PERTAIN, THE INSURANCE AFFORDED BY THE POLICIES DESCRIBED HEREIN IS SUBJECT TO ALL THE TERMS, EXCLUSIONS AND CONDITIONS OF SUCH POLICIES. LIMITS SHOWN MAY HAVE BEEN REDUCED BY PAID CLAIMS.

INSR LTR	TYPE OF INSURANCE	ADDL INSD	SUBR WVD	POLICY NUMBER	POLICY EFF (MM/DD/YYYY)	POLICY EXP (MM/DD/YYYY)	LIMITS	
A	X COMMERCIAL GENERAL LIABILITY CLAIMS-MADE X OCCUR GEN'L AGGREGATE LIMIT APPLIES PER: POLICY X PRO-JECT LOC OTHER:	X	X	6016149399	12/31/2025	12/31/2026	EACH OCCURRENCE DAMAGE TO RENTED PREMISES (Ea occurrence) MED EXP (Any one person) PERSONAL & ADV INJURY GENERAL AGGREGATE PRODUCTS - COMP/OP AGG	$ 1,000,000 $ 1,000,000 $ 15,000 $ 1,000,000 $ 2,000,000 $ 2,000,000
B	AUTOMOBILE LIABILITY X ANY AUTO OWNED AUTOS ONLY SCHEDULED AUTOS HIRED AUTOS ONLY NON-OWNED AUTOS ONLY	X	X	6016149371	12/31/2025	12/31/2026	COMBINED SINGLE LIMIT (Ea accident) BODILY INJURY (Per person) BODILY INJURY (Per accident) PROPERTY DAMAGE (Per accident)	$ 1,000,000 $ $ $
C	X UMBRELLA LIAB X OCCUR EXCESS LIAB CLAIMS-MADE DED X RETENTION $ 10,000	X	X	6016149404	12/31/2025	12/31/2026	EACH OCCURRENCE AGGREGATE Aggregate	$ 5,000,000 $ $ 5,000,000
D	WORKERS COMPENSATION AND EMPLOYERS' LIABILITY ANY PROPRIETOR/PARTNER/EXECUTIVE OFFICER/MEMBER EXCLUDED? (Mandatory in NH) Y / N: N If yes, describe under DESCRIPTION OF OPERATIONS below	N / A	X	WC100-0005672-2026A	1/1/2026	1/1/2027	X PER STATUTE OTH-ER E.L. EACH ACCIDENT E.L. DISEASE - EA EMPLOYEE E.L. DISEASE - POLICY LIMIT	$ 2,000,000 $ 2,000,000 $ 2,000,000

DESCRIPTION OF OPERATIONS / LOCATIONS / VEHICLES (ACORD 101, Additional Remarks Schedule, may be attached if more space is required)

Umbrella is Form Following over General Liability, Auto Liability and Employers Liability. Additional Insured, Waiver of Subrogation and Primary Non-Contributory apply per attached policy forms.

CERTIFICATE HOLDER

City of Santa Fe
2651 Siringo Rd. E.
Santa Fe, NM 87505

CANCELLATION

SHOULD ANY OF THE ABOVE DESCRIBED POLICIES BE CANCELLED BEFORE THE EXPIRATION DATE THEREOF, NOTICE WILL BE DELIVERED IN ACCORDANCE WITH THE POLICY PROVISIONS.

AUTHORIZED REPRESENTATIVE

© 1988-2015 ACORD CORPORATION. All rights reserved.
The ACORD name and logo are registered marks of ACORD

CNA

CNA PARAMOUNT

Contractors' General Liability Extension Endorsement

It is understood and agreed that this endorsement amends the **COMMERCIAL GENERAL LIABILITY COVERAGE PART** as follows. If any other endorsement attached to this policy amends any provision also amended by this endorsement, then that other endorsement controls with respect to such provision, and the changes made by this endorsement with respect to such provision do not apply.

TABLE OF CONTENTS

1. **Additional Insureds**
2. **Additional Insured - Primary And Non-Contributory To Additional Insured's Insurance**
3. **Bodily Injury – Expanded Definition**
4. **Broad Knowledge of Occurrence/ Notice of Occurrence**
5. **Broad Named Insured**
6. **Broadened Liability Coverage For Damage To Your Product And Your Work**
7. **Contractual Liability - Railroads**
8. **Electronic Data Liability**
9. **Estates, Legal Representatives and Spouses**
10. **Expected Or Intended Injury – Exception for Reasonable Force**
11. **General Aggregate Limits of Insurance – Per Project**
12. **In Rem Actions**
13. **Incidental Health Care Malpractice Coverage**
14. **Joint Ventures/Partnership/Limited Liability Companies**
15. **Legal Liability – Damage To Premises / Alienated Premises / Property In The Named Insured's Care, Custody or Control**
16. **Liquor Liability**
17. **Medical Payments**
18. **Non-owned Aircraft Coverage**
19. **Non-owned Watercraft**
20. **Personal And Advertising Injury – Discrimination or Humiliation**
21. **Personal And Advertising Injury - Contractual Liability**
22. **Property Damage - Elevators**
23. **Supplementary Payments**
24. **Unintentional Failure To Disclose Hazards**
25. **Waiver of Subrogation – Blanket**
26. **Wrap-Up Extension: OCIP CCIP, or Consolidated (Wrap-Up) Insurance Programs**

000007 - 0319 of 0440 - NNNNNNN - 01365 JOBID 3AE4C007568

Copyright CNA All Rights Reserved. Includes copyrighted material of Insurance Services Office, Inc., with its permission.

1. ADDITIONAL INSUREDS

a. **WHO IS AN INSURED** is amended to include as an **Insured** any person or organization described in paragraphs **A.** through **H.** below whom a **Named Insured** is required to add as an additional insured on this **Coverage Part** under a written contract or written agreement, provided such contract or agreement:

(1) is currently in effect or becomes effective during the term of this **Coverage Part**; and

(2) was executed prior to:

(a) the **bodily injury** or **property damage**; or

(b) the offense that caused the **personal and advertising injury**,

for which such additional insured seeks coverage.

b. However, subject always to the terms and conditions of this policy, including the limits of insurance, the Insurer will not provide such additional insured with:

(1) a higher limit of insurance than required by such contract or agreement; or

(2) coverage broader than required by such contract or agreement, and in no event broader than that described by the applicable paragraph **A.** through **H.** below.

Any coverage granted by this endorsement shall apply only to the extent permissible by law.

A. Controlling Interest

Any person or organization with a controlling interest in a **Named Insured**, but only with respect to such person or organization's liability for **bodily injury**, **property damage** or **personal and advertising injury** arising out of:

1. such person or organization's financial control of a **Named Insured**; or
2. premises such person or organization owns, maintains or controls while a **Named Insured** leases or occupies such premises;

provided that the coverage granted by this paragraph does not apply to structural alterations, new construction or demolition operations performed by, on behalf of, or for such additional insured.

B. Co-owner of Insured Premises

A co-owner of a premises co-owned by a **Named Insured** and covered under this insurance but only with respect to such co-owner's liability for **bodily injury**, **property damage** or **personal and advertising injury** as co-owner of such premises.

C. Lessor of Equipment

Any person or organization from whom a **Named Insured** leases equipment, but only with respect to liability for **bodily injury**, **property damage** or **personal and advertising injury** caused, in whole or in part, by the **Named Insured's** maintenance, operation or use of such equipment, provided that the **occurrence** giving rise to such **bodily injury**, **property damage** or the offense giving rise to such **personal and advertising injury** takes place prior to the termination of such lease.

D. Lessor of Land

Any person or organization from whom a **Named Insured** leases land but only with respect to liability for **bodily injury**, **property damage** or **personal and advertising injury** arising out of the ownership, maintenance or use of such land, provided that the **occurrence** giving rise to such **bodily injury**, **property damage** or the offense giving rise to such **personal and advertising injury** takes place prior to the termination of such lease. The

Copyright CNA All Rights Reserved. Includes copyrighted material of Insurance Services Office, Inc., with its permission.

coverage granted by this paragraph does not apply to structural alterations, new construction or demolition operations performed by, on behalf of, or for such additional insured.

E. Lessor of Premises

An owner or lessor of premises leased to the **Named Insured**, or such owner or lessor's real estate manager, but only with respect to liability for **bodily injury**, **property damage** or **personal and advertising injury** arising out of the ownership, maintenance or use of such part of the premises leased to the **Named Insured**, and provided that the **occurrence** giving rise to such **bodily injury** or **property damage**, or the offense giving rise to such **personal and advertising injury**, takes place prior to the termination of such lease. The coverage granted by this paragraph does not apply to structural alterations, new construction or demolition operations performed by, on behalf of, or for such additional insured.

F. Mortgagee, Assignee or Receiver

A mortgagee, assignee or receiver of premises but only with respect to such mortgagee, assignee or receiver's liability for **bodily injury**, **property damage** or **personal and advertising injury** arising out of the **Named Insured's** ownership, maintenance, or use of a premises by a **Named Insured**.

The coverage granted by this paragraph does not apply to structural alterations, new construction or demolition operations performed by, on behalf of, or for such additional insured.

G. State or Governmental Agency or Subdivision or Political Subdivisions – Permits

A state or governmental agency or subdivision or political subdivision that has issued a permit or authorization but only with respect to such state or governmental agency or subdivision or political subdivision's liability for **bodily injury**, **property damage** or **personal and advertising injury** arising out of:

1. the following hazards in connection with premises a **Named Insured** owns, rents, or controls and to which this insurance applies:
   a. the existence, maintenance, repair, construction, erection, or removal of advertising signs, awnings, canopies, cellar entrances, coal holes, driveways, manholes, marquees, hoistaway openings, sidewalk vaults, street banners, or decorations and similar exposures; or
   b. the construction, erection, or removal of elevators; or
   c. the ownership, maintenance or use of any elevators covered by this insurance; or
2. the permitted or authorized operations performed by a **Named Insured** or on a **Named Insured's** behalf.

   The coverage granted by this paragraph does not apply to:
   a. **Bodily injury**, **property damage** or **personal and advertising injury** arising out of operations performed for the state or governmental agency or subdivision or political subdivision; or
   b. **Bodily injury** or **property damage** included within the **products-completed operations hazard**.

With respect to this provision's requirement that additional insured status must be requested under a written contract or agreement, the Insurer will treat as a written contract any governmental permit that requires the **Named Insured** to add the governmental entity as an additional insured.

H. Trade Show Event Lessor

1. With respect to a **Named Insured's** participation in a trade show event as an exhibitor, presenter or displayer, any person or organization whom the **Named Insured** is required to include as an additional insured, but only with respect to such person or organization's liability for **bodily injury**, **property damage** or **personal and advertising injury** caused by:

Copyright CNA All Rights Reserved. Includes copyrighted material of Insurance Services Office, Inc., with its permission.

000007 - 0320 of 0440 - NNNNNN - 01366 JOBID 3AE4C007568

a. the **Named Insured's** acts or omissions; or

b. the acts or omissions of those acting on the **Named Insured's** behalf,

in the performance of the **Named Insured's** ongoing operations at the trade show event premises during the trade show event.

2. The coverage granted by this paragraph does not apply to **bodily injury** or **property damage** included within the **products-completed operations hazard.**

2. ADDITIONAL INSURED - PRIMARY AND NON-CONTRIBUTORY TO ADDITIONAL INSURED'S INSURANCE

The **Other Insurance** Condition in the **COMMERCIAL GENERAL LIABILITY CONDITIONS** Section is amended to add the following paragraph:

If the **Named Insured** has agreed in writing in a contract or agreement that this insurance is primary and non-contributory relative to an additional insured's own insurance, then this insurance is primary, and the Insurer will not seek contribution from that other insurance. For the purpose of this Provision **2.**, the additional insured's own insurance means insurance on which the additional insured is a named insured. Otherwise, and notwithstanding anything to the contrary elsewhere in this Condition, the insurance provided to such person or organization is excess of any other insurance available to such person or organization.

3. BODILY INJURY – EXPANDED DEFINITION

Under **DEFINITIONS**, the definition of **bodily injury** is deleted and replaced by the following:

Bodily injury means physical injury, sickness or disease sustained by a person, including death, humiliation, shock, mental anguish or mental injury sustained by that person at any time which results as a consequence of the physical injury, sickness or disease.

4. BROAD KNOWLEDGE OF OCCURRENCE/ NOTICE OF OCCURRENCE

Under **CONDITIONS**, the condition entitled **Duties in The Event of Occurrence, Offense, Claim or Suit** is amended to add the following provisions:

A. BROAD KNOWLEDGE OF OCCURRENCE

The **Named Insured** must give the Insurer or the Insurer's authorized representative notice of an **occurrence**, offense or **claim** only when the **occurrence**, offense or **claim** is known to a natural person **Named Insured**, to a partner, executive officer, manager or member of a **Named Insured**, or an **employee** designated by any of the above to give such notice.

B. NOTICE OF OCCURRENCE

The **Named Insured's** rights under this **Coverage Part** will not be prejudiced if the **Named Insured** fails to give the Insurer notice of an **occurrence**, offense or **claim** and that failure is solely due to the **Named Insured's** reasonable belief that the **bodily injury** or **property damage** is not covered under this **Coverage Part**. However, the **Named Insured** shall give written notice of such **occurrence**, offense or **claim** to the Insurer as soon as the **Named Insured** is aware that this insurance may apply to such **occurrence**, offense or **claim**.

5. BROAD NAMED INSURED

WHO IS AN INSURED is amended to delete its Paragraph **3.** in its entirety and replace it with the following:

3. Pursuant to the limitations described in Paragraph **4.** below, any organization in which a **Named Insured** has management control:

a. on the effective date of this **Coverage Part**; or

Copyright CNA All Rights Reserved. Includes copyrighted material of Insurance Services Office, Inc., with its permission.

000007 - 0321 of 0440 - NNNNNN - 01367 JOBID 3AB4C007568

b. by reason of a **Named Insured** creating or acquiring the organization during the **policy period**,

qualifies as a **Named Insured**, provided that there is no other similar liability insurance, whether primary, contributory, excess, contingent or otherwise, which provides coverage to such organization, or which would have provided coverage but for the exhaustion of its limit, and without regard to whether its coverage is broader or narrower than that provided by this insurance.

But this **BROAD NAMED INSURED** provision does not apply to:

(a) any partnership, limited liability company or joint venture; or

(b) any organization for which coverage is excluded by another endorsement attached to this **Coverage Part**.

For the purpose of this provision, management control means:

A. owning interests representing more than 50% of the voting, appointment or designation power for the selection of a majority of the Board of Directors of a corporation; or

B. having the right, pursuant to a written trust agreement, to protect, control the use of, encumber or transfer or sell property held by a trust.

4. With respect to organizations which qualify as **Named Insureds** by virtue of Paragraph **3.** above, this insurance does not apply to:

a. **bodily injury** or **property damage** that first occurred prior to the date of management control, or that first occurs after management control ceases; nor

b. **personal or advertising injury** caused by an offense that first occurred prior to the date of management control or that first occurs after management control ceases.

5. The insurance provided by this **Coverage Part** applies to **Named Insureds** when trading under their own names or under such other trading names or doing-business-as names (dba) as any **Named Insured** should choose to employ.

6. BROADENED LIABILITY COVERAGE FOR DAMAGE TO YOUR PRODUCT AND YOUR WORK

A. Under **COVERAGES**, **Coverage A – Bodily Injury and Property Damage Liability**, the paragraph entitled **Exclusions** is amended to delete exclusions **k.** and **l.** and replace them with the following:

This insurance does not apply to:

k. Damage to Your Product

Property damage to **your product** arising out of it, or any part of it except when caused by or resulting from:

(1) fire;

(2) smoke;

(3) collapse; or

(4) explosion.

l. Damage to Your Work

Property damage to **your work** arising out of it, or any part of it and included in the **products-completed operations hazard**.

This exclusion does not apply:

(1) If the damaged work, or the work out of which the damage arises, was performed on the **Named Insured's** behalf by a subcontractor; or

Copyright CNA All Rights Reserved. Includes copyrighted material of Insurance Services Office, Inc., with its permission.

(2) If the cause of loss to the damaged work arises as a result of:

(a) fire;

(b) smoke;

(c) collapse; or

(d) explosion.

B. The following paragraph is added to **LIMITS OF INSURANCE**:

Subject to **5.** above, $100,000 is the most the Insurer will pay under **Coverage A** for the sum of **damages** arising out of any one **occurrence** because of **property damage** to **your product** and **your work** that is caused by fire, smoke, collapse or explosion and is included within the **product-completed operations hazard**. This sublimit does not apply to **property damage** to **your work** if the damaged work, or the work out of which the damage arises, was performed on the **Named Insured's** behalf by a subcontractor.

C. This **Broadened Liability Coverage For Damage To Your Product And Your Work** Provision does not apply if an endorsement of the same name is attached to this policy.

7. CONTRACTUAL LIABILITY – RAILROADS

With respect to operations performed within 50 feet of railroad property, the definition of **insured contract** is replaced by the following:

Insured Contract means:

a. A contract for a lease of premises. However, that portion of the contract for a lease of premises that indemnifies any person or organization for damage by fire to premises while rented to a **Named Insured** or temporarily occupied by a **Named Insured** with permission of the owner is not an **insured contract**;

b. A sidetrack agreement;

c. Any easement or license agreement;

d. An obligation, as required by ordinance, to indemnify a municipality, except in connection with work for a municipality;

e. An elevator maintenance agreement;

f. That part of any other contract or agreement pertaining to the **Named Insured's** business (including an indemnification of a municipality in connection with work performed for a municipality) under which the **Named Insured** assumes the tort liability of another party to pay for **bodily injury** or **property damage** to a third person or organization. Tort liability means a liability that would be imposed by law in the absence of any contract or agreement.

Paragraph **f.** does not include that part of any contract or agreement:

(1) That indemnifies an architect, engineer or surveyor for injury or damage arising out of:

(a) Preparing, approving or failing to prepare or approve maps, shop drawings, opinions, reports, surveys, field orders, change orders or drawings and specifications; or

(b) Giving directions or instructions, or failing to give them, if that is the primary cause of the injury or damage;

(2) Under which the **Insured**, if an architect, engineer or surveyor, assumes liability for an injury or damage arising out of the insured's rendering or failure to render professional services, including those listed in **(1)** above and supervisory, inspection, architectural or engineering activities.

8. ELECTRONIC DATA LIABILITY

Copyright CNA All Rights Reserved. Includes copyrighted material of Insurance Services Office, Inc., with its permission.

000007 - 0322 of 0440 - NNNNNN - 01368 JOBID 3AE4C007568

A. Under **COVERAGES**, **Coverage A – Bodily Injury and Property Damage Liability**, the paragraph entitled **Exclusions** is amended to delete exclusion **p. Electronic Data** and replace it with the following:

This insurance does not apply to:

p. Access Or Disclosure Of Confidential Or Personal Information And Data-related Liability

Damages arising out of:

(1) any access to or disclosure of any person's or organization's confidential or personal information, including patents, trade secrets, processing methods, customer lists, financial information, credit card information, health information or any other type of nonpublic information; or

(2) the loss of, loss of use of, damage to, corruption of, inability to access, or inability to manipulate **electronic data** that does not result from physical injury to tangible property.

However, unless Paragraph **(1)** above applies, this exclusion does not apply to **damages** because of **bodily injury**.

This exclusion applies even if damages are claimed for notification costs, credit monitoring expenses, forensic expenses, public relation expenses or any other loss, cost or expense incurred by the **Named Insured** or others arising out of that which is described in Paragraph **(1)** or **(2)** above.

B. The following paragraph is added to **LIMITS OF INSURANCE**:

Subject to **5.** above, $100,000 is the most the Insurer will pay under **Coverage A** for all **damages** arising out of any one **occurrence** because of **property damage** that results from physical injury to tangible property and arises out of **electronic data**.

C. The following definition is added to **DEFINITIONS**:

Electronic data means information, facts or programs stored as or on, created or used on, or transmitted to or from computer software (including systems and applications software), hard or floppy disks, CD-ROMS, tapes, drives, cells, data processing devices or any other media which are used with electronically controlled equipment.

D. For the purpose of the coverage provided by this **ELECTRONIC DATA LIABILITY** Provision, the definition of **property damage** in **DEFINITIONS** is replaced by the following:

Property damage means:

a. Physical injury to tangible property, including all resulting loss of use of that property. All such loss of use shall be deemed to occur at the time of the physical injury that caused it;

b. Loss of use of tangible property that is not physically injured. All such loss of use shall be deemed to occur at the time of the **occurrence** that caused it; or

c. Loss of, loss of use of, damage to, corruption of, inability to access, or inability to properly manipulate **electronic data**, resulting from physical injury to tangible property. All such loss of **electronic data** shall be deemed to occur at the time of the **occurrence** that caused it.

For the purposes of this insurance, **electronic data** is not tangible property.

E. If Electronic Data Liability is provided at a higher limit by another endorsement attached to this policy, then the $100,000 limit provided by this **ELECTRONIC DATA LIABILITY** Provision is part of, and not in addition to, that higher limit.

9. ESTATES, LEGAL REPRESENTATIVES, AND SPOUSES

The estates, heirs, legal representatives and **spouses** of any natural person **Insured** shall also be insured under this policy; provided, however, coverage is afforded to such estates, heirs, legal representatives, and **spouses** only for

Copyright CNA All Rights Reserved. Includes copyrighted material of Insurance Services Office, Inc., with its permission.

claims arising solely out of their capacity or status as such and, in the case of a **spouse**, where such **claim** seeks **damages** from marital community property, jointly held property or property transferred from such natural person **Insured** to such **spouse**. No coverage is provided for any act, error or omission of an estate, heir, legal representative, or **spouse** outside the scope of such person's capacity or status as such, provided however that the **spouse** of a natural person **Named Insured** and the **spouses** of members or partners of joint venture or partnership **Named Insureds** are **Insureds** with respect to such **spouses'** acts, errors or omissions in the conduct of the **Named Insured's** business.

10. EXPECTED OR INTENDED INJURY – EXCEPTION FOR REASONABLE FORCE

Under **COVERAGES, Coverage A – Bodily Injury and Property Damage Liability**, the paragraph entitled **Exclusions** is amended to delete the exclusion entitled **Expected or Intended Injury** and replace it with the following:

This insurance does not apply to:

Expected or Intended Injury

Bodily injury or **property damage** expected or intended from the standpoint of the **Insured**. This exclusion does not apply to **bodily injury** or **property damage** resulting from the use of reasonable force to protect persons or property.

11. GENERAL AGGREGATE LIMITS OF INSURANCE - PER PROJECT

A. For each construction project away from premises the **Named Insured** owns or rents, a separate Construction Project General Aggregate Limit, equal to the amount of the General Aggregate Limit shown in the Declarations, is the most the Insurer will pay for the sum of:

1. All **damages** under **Coverage A**, except **damages** because of **bodily injury** or **property damage** included in the **products-completed operations hazard**; and
2. All medical expenses under **Coverage C**,

that arise from **occurrences** or accidents which can be attributed solely to ongoing operations at that construction project. Such payments shall not reduce the General Aggregate Limit shown in the Declarations, nor the Construction Project General Aggregate Limit of any other construction project.

B. All:

1. **Damages** under **Coverage B**, regardless of the number of locations or construction projects involved;
2. **Damages** under **Coverage A**, caused by **occurrences** which cannot be attributed solely to ongoing operations at a single construction project, except **damages** because of **bodily injury** or **property damage** included in the **products-completed operations hazard**; and
3. Medical expenses under **Coverage C** caused by accidents which cannot be attributed solely to ongoing operations at a single construction project,

will reduce the General Aggregate Limit shown in the Declarations.

C. The limits shown in the Declarations for Each Occurrence, for Damage To Premises Rented To You and for Medical Expense continue to apply, but will be subject to either the Construction Project General Aggregate Limit or the General Aggregate Limit shown in the Declarations, depending on whether the **occurrence** can be attributed solely to ongoing operations at a particular construction project.

D. When coverage for liability arising out of the **products-completed operations hazard** is provided, any payments for **damages** because of **bodily injury** or **property damage** included in the **products-completed operations hazard** will reduce the Products-Completed Operations Aggregate Limit shown in the Declarations, regardless of the number of projects involved.

Copyright CNA All Rights Reserved. Includes copyrighted material of Insurance Services Office, Inc., with its permission.

E. If a single construction project away from premises owned by or rented to the **Insured** has been abandoned and then restarted, or if the authorized contracting parties deviate from plans, blueprints, designs, specifications or timetables, the project will still be deemed to be the same construction project.

F. The provisions of **LIMITS OF INSURANCE** not otherwise modified by this endorsement shall continue to apply as stipulated.

12. IN REM ACTIONS

A quasi in rem action against any vessel owned or operated by or for the **Named Insured**, or chartered by or for the **Named Insured**, will be treated in the same manner as though the action were in personam against the **Named Insured**.

13. INCIDENTAL HEALTH CARE MALPRACTICE COVERAGE

Solely with respect to **bodily injury** that arises out of a **health care incident**:

A. Under **COVERAGES**, **Coverage A – Bodily Injury and Property Damage Liability**, the paragraph entitled **Insuring Agreement** is amended to replace Paragraphs **1.b.(1)** and **1.b.(2)** with the following:

b. This insurance applies to **bodily injury** provided that the professional health care services are incidental to the **Named Insured's** primary business purpose, and only if:

(1) such **bodily injury** is caused by an **occurrence** that takes place in the **coverage territory**.

(2) the **bodily injury** first occurs during the **policy period**. All **bodily injury** arising from an **occurrence** will be deemed to have occurred at the time of the first act, error, or omission that is part of the **occurrence**; and

B. Under **COVERAGES**, **Coverage A – Bodily Injury and Property Damage Liability**, the paragraph entitled **Exclusions** is amended to:

i. add the following to the **Employers Liability** exclusion:

This exclusion applies only if the **bodily injury** arising from a **health care incident** is covered by other liability insurance available to the **Insured** (or which would have been available but for exhaustion of its limits).

ii. delete the exclusion entitled **Contractual Liability** and replace it with the following:

This insurance does not apply to:

Contractual Liability

the **Insured's** actual or alleged liability under any oral or written contract or agreement, including but not limited to express warranties or guarantees.

iii. add the following additional exclusions:

This insurance does not apply to:

Discrimination

any actual or alleged discrimination, humiliation or harassment, including but not limited to **claims** based on an individual's race, creed, color, age, gender, national origin, religion, disability, marital status or sexual orientation.

Dishonesty or Crime

Any actual or alleged dishonest, criminal or malicious act, error or omission.

Medicare/Medicaid Fraud

Copyright CNA All Rights Reserved. Includes copyrighted material of Insurance Services Office, Inc., with its permission.

000007 - 0323 of 0440 - NNNNNN - 01369 JOBID 3AE4C007568

any actual or alleged violation of law with respect to Medicare, Medicaid, Tricare or any similar federal, state or local governmental program.

Services Excluded by Endorsement

Any **health care incident** for which coverage is excluded by endorsement.

C. DEFINITIONS is amended to:

i. add the following definitions:

Health care incident means an act, error or omission by the **Named Insured's employees** or **volunteer workers** in the rendering of:

a. **professional health care services** on behalf of the **Named Insured** or

b. Good Samaritan services rendered in an emergency and for which no payment is demanded or received.

Professional health care services means any health care services or the related furnishing of food, beverages, medical supplies or appliances by the following providers in their capacity as such but solely to the extent they are duly licensed as required:

a. Physician;

b. Nurse;

c. Nurse practitioner;

d. Emergency medical technician;

e. Paramedic;

f. Dentist;

g. Physical therapist;

h. Psychologist;

i. Speech therapist;

j. Other allied health professional; or

Professional health care services does not include any services rendered in connection with human clinical trials or product testing.

ii. delete the definition of **occurrence** and replace it with the following:

Occurrence means a **health care incident**. All acts, errors or omissions that are logically connected by any common fact, circumstance, situation, transaction, event, advice or decision will be considered to constitute a single **occurrence**;

iii. amend the definition of **Insured** to:

a. add the following:

the **Named Insured's employees** are **Insureds** with respect to:

(1) **bodily injury** to a co-**employee** while in the course of the co-**employee's** employment by the **Named Insured** or while performing duties related to the conduct of the **Named Insured's** business; and

Copyright CNA All Rights Reserved. Includes copyrighted material of Insurance Services Office, Inc., with its permission.

(2) **bodily injury** to a **volunteer worker** while performing duties related to the conduct of the **Named Insured's** business;

when such **bodily injury** arises out of a **health care incident**.

the **Named Insured's volunteer workers** are **Insureds** with respect to:

(1) **bodily injury** to a co-**volunteer worker** while performing duties related to the conduct of the **Named Insured's** business; and

(2) **bodily injury** to an **employee** while in the course of the **employee's** employment by the **Named Insured** or while performing duties related to the conduct of the **Named Insured's** business;

when such **bodily injury** arises out of a **health care incident**.

b. delete Subparagraphs **(a), (b), (c) and (d)** of Paragraph **2.a.(1)** of **WHO IS AN INSURED**.

D. The **Other Insurance** condition is amended to delete Paragraph **b.(1)** in its entirety and replace it with the following:

Other Insurance

b. Excess Insurance

(1) To the extent this insurance applies, it is excess over any other insurance, self insurance or risk transfer instrument, whether primary, excess, contingent or on any other basis, except for insurance purchased specifically by the **Named Insured** to be excess of this coverage.

14. JOINT VENTURES / PARTNERSHIP / LIMITED LIABILITY COMPANIES

WHO IS AN INSURED is amended to delete its last paragraph and replace it with the following:

No person or organization is an **Insured** with respect to the conduct of any current or past partnership, joint venture or limited liability company that is not shown as a **Named Insured** in the Declarations, except that if the **Named Insured** was a joint venturer, partner, or member of a limited liability company and such joint venture, partnership or limited liability company terminated prior to or during the **policy period**, such **Named Insured** is an **Insured** with respect to its interest in such joint venture, partnership or limited liability company but only to the extent that:

a. any offense giving rise to **personal and advertising injury** occurred prior to such termination date, and the **personal and advertising injury** arising out of such offense first occurred after such termination date;

b. the **bodily injury** or **property damage** first occurred after such termination date; and

c. there is no other valid and collectible insurance purchased specifically to insure the partnership, joint venture or limited liability company; and

If the joint venture, partnership or limited liability company is or was insured under a **consolidated (wrap-up) insurance program**, then such insurance will always be considered valid and collectible for the purpose of paragraph **c.** above. But this provision will not serve to exclude **bodily injury**, **property damage** or **personal and advertising injury** that would otherwise be covered under the **Contractors General Liability Extension Endorsement** provision entitled **WRAP-UP EXTENSION: OCIP, CCIP, OR CONSOLIDATED (WRAP-UP) INSURANCE PROGRAMS**. Please see that provision for the definition of **consolidated (wrap-up) insurance program**.

15. LEGAL LIABILITY – DAMAGE TO PREMISES / ALIENATED PREMISES / PROPERTY IN THE NAMED INSURED'S CARE, CUSTODY OR CONTROL

A. Under **COVERAGES, Coverage A – Bodily Injury and Property Damage Liability**, the paragraph entitled **Exclusions** is amended to delete exclusion **j. Damage to Property** in its entirety and replace it with the following:

This insurance does not apply to:

Copyright CNA All Rights Reserved. Includes copyrighted material of Insurance Services Office, Inc., with its permission.

000007 - 0324 of 0440 - NNNNNN - 01370 JOBID 3AE4C007568

j. Damage to Property

Property damage to:

(1) Property the **Named Insured** owns, rents, or occupies, including any costs or expenses incurred by you, or any other person, organization or entity, for repair, replacement, enhancement, restoration or maintenance of such property for any reason, including prevention of injury to a person or damage to another's property;

(2) Premises the **Named Insured** sells, gives away or abandons, if the **property damage** arises out of any part of those premises;

(3) Property loaned to the **Named Insured**;

(4) Personal property in the care, custody or control of the **Insured**;

(5) That particular part of real property on which the **Named Insured** or any contractors or subcontractors working directly or indirectly on the **Named Insured's** behalf are performing operations, if the **property damage** arises out of those operations; or

(6) That particular part of any property that must be restored, repaired or replaced because **your work** was incorrectly performed on it.

Paragraphs **(1), (3)** and **(4)** of this exclusion do not apply to **property damage** (other than damage by fire) to premises rented to the **Named Insured** or temporarily occupied by the **Named Insured** with the permission of the owner, nor to the contents of premises rented to the **Named Insured** for a period of 7 or fewer consecutive days. A separate limit of insurance applies to Damage To Premises Rented To You as described in **LIMITS OF INSURANCE**.

Paragraph **(2)** of this exclusion does not apply if the premises are **your work**.

Paragraphs **(3), (4), (5)** and **(6)** of this exclusion do not apply to liability assumed under a sidetrack agreement.

Paragraph **(6)** of this exclusion does not apply to **property damage** included in the **products-completed operations hazard**.

Paragraphs **(3)** and **(4)** of this exclusion do not apply to **property damage** to:

i. tools, or equipment the **Named Insured** borrows from others, nor

ii. other personal property of others in the **Named Insured's** care, custody or control while being used in the **Named Insured's** operations away from any **Named Insured's** premises.

However, the coverage granted by this exception to Paragraphs **(3)** and **(4)** does not apply to:

a. property at a job site awaiting or during such property's installation, fabrication, or erection;

b. property that is **mobile equipment** leased by an **Insured**;

c. property that is an **auto**, aircraft or watercraft;

d. property in transit; or

e. any portion of **property damage** for which the **Insured** has available other valid and collectible insurance, or would have such insurance but for exhaustion of its limits, or but for application of one of its exclusions.

A separate limit of insurance and deductible apply to such property of others. See **LIMITS OF INSURANCE** as amended below.

Copyright CNA All Rights Reserved. Includes copyrighted material of Insurance Services Office, Inc., with its permission.

B. Under **COVERAGES, Coverage A – Bodily Injury and Property Damage Liability**, the paragraph entitled **Exclusions** is amended to delete its last paragraph and replace it with the following:

Exclusions **c.** through **n.** do not apply to damage by fire to premises while rented to a **Named Insured** or temporarily occupied by a **Named Insured** with permission of the owner, nor to damage to the contents of premises rented to a **Named Insured** for a period of 7 or fewer consecutive days.

A separate limit of insurance applies to this coverage as described in **LIMITS OF INSURANCE**.

C. The following paragraph is added to **LIMITS OF INSURANCE**:

Subject to **5.** above, $25,000 is the most the Insurer will pay under **Coverage A** for **damages** arising out of any one **occurrence** because of the sum of all **property damage** to borrowed tools or equipment, and to other personal property of others in the **Named Insured's** care, custody or control, while being used in the **Named Insured's** operations away from any **Named Insured's** premises. The Insurer's obligation to pay such **property damage** does not apply until the amount of such **property damage** exceeds $1,000. The Insurer has the right but not the duty to pay any portion of this $1,000 in order to effect settlement. If the Insurer exercises that right, the **Named Insured** will promptly reimburse the Insurer for any such amount.

D. Paragraph **6.**, Damage To Premises Rented To You Limit, of **LIMITS OF INSURANCE** is deleted and replaced by the following:

6. Subject to Paragraph **5.** above, (the Each Occurrence Limit), the Damage To Premises Rented To You Limit is the most the Insurer will pay under **Coverage A** for **damages** because of **property damage** to any one premises while rented to the **Named Insured** or temporarily occupied by the **Named Insured** with the permission of the owner, including contents of such premises rented to the **Named Insured** for a period of 7 or fewer consecutive days. The Damage To Premises Rented To You Limit is the greater of:

a. $500,000; or

b. The Damage To Premises Rented To You Limit shown in the Declarations.

E. Paragraph **4.b.(1)(a)(ii)** of the **Other Insurance** Condition is deleted and replaced by the following:

(ii) That is property insurance for premises rented to the **Named Insured**, for premises temporarily occupied by the **Named Insured** with the permission of the owner; or for personal property of others in the **Named Insured's** care, custody or control;

16. LIQUOR LIABILITY

Under **COVERAGES, Coverage A – Bodily Injury and Property Damage Liability**, the paragraph entitled **Exclusions** is amended to delete the exclusion entitled **Liquor Liability**.

This **LIQUOR LIABILITY** provision does not apply to any person or organization who otherwise qualifies as an additional insured on this **Coverage Part**.

17. MEDICAL PAYMENTS

A. LIMITS OF INSURANCE is amended to delete Paragraph **7.** (the Medical Expense Limit) and replace it with the following:

7. Subject to Paragraph **5.** above (the Each Occurrence Limit), the Medical Expense Limit is the most the Insurer will pay under **Coverage C – Medical Payments** for all medical expenses because of **bodily injury** sustained by any one person. The Medical Expense Limit is the greater of:

(1) $15,000 unless a different amount is shown here: $N,NNN,NNN,NNN; or

(2) the amount shown in the Declarations for Medical Expense Limit.

Copyright CNA All Rights Reserved. Includes copyrighted material of Insurance Services Office, Inc., with its permission.

000007 - 0325 OF 0440 - NNNNNN - 01371 JOBID 3AE4C007568

B. Under **COVERAGES**, the **Insuring Agreement** of **Coverage C – Medical Payments** is amended to replace Paragraph **1.a.(3)(b)** with the following:

(b) The expenses are incurred and reported to the Insurer within three years of the date of the accident; and

18. NON-OWNED AIRCRAFT

Under **COVERAGES, Coverage A – Bodily Injury and Property Damage Liability**, the paragraph entitled **Exclusions** is amended as follows:

The exclusion entitled **Aircraft, Auto or Watercraft** is amended to add the following:

This exclusion does not apply to an aircraft not owned by any **Named Insured**, provided that:

1. the pilot in command holds a currently effective certificate issued by the duly constituted authority of the United States of America or Canada, designating that person as a commercial or airline transport pilot;

2. the aircraft is rented with a trained, paid crew to the **Named Insured**; and

3. the aircraft is not being used to carry persons or property for a charge.

19. NON-OWNED WATERCRAFT

Under **COVERAGES, Coverage A – Bodily Injury and Property Damage Liability**, the paragraph entitled **Exclusions** is amended to delete subparagraph **(2)** of the exclusion entitled **Aircraft, Auto or Watercraft**, and replace it with the following.

This exclusion does not apply to:

(2) a watercraft that is not owned by any **Named Insured**, provided the watercraft is:

(a) less than 75 feet long; and

(b) not being used to carry persons or property for a charge.

20. PERSONAL AND ADVERTISING INJURY –DISCRIMINATION OR HUMILIATION

A. Under **DEFINITIONS**, the definition of **personal and advertising injury** is amended to add the following tort:

Discrimination or humiliation that results in injury to the feelings or reputation of a natural person.

B. Under **COVERAGES, Coverage B – Personal and Advertising Injury Liability**, the paragraph entitled **Exclusions** is amended to:

1. delete the Exclusion entitled **Knowing Violation Of Rights Of Another** and replace it with the following:

This insurance does not apply to:

Knowing Violation of Rights of Another

Personal and advertising injury caused by or at the direction of the **Insured** with the knowledge that the act would violate the rights of another and would inflict **personal and advertising injury**. This exclusion shall not apply to discrimination or humiliation that results in injury to the feelings or reputation of a natural person, but only if such discrimination or humiliation is not done intentionally by or at the direction of:

(a) the **Named Insured**; or

(b) any **executive officer**, director, stockholder, partner, member or manager (if the **Named Insured** is a limited liability company) of the **Named Insured**.

2. add the following exclusions:

Copyright CNA All Rights Reserved. Includes copyrighted material of Insurance Services Office, Inc., with its permission.

This insurance does not apply to:

Employment Related Discrimination

Discrimination or humiliation directly or indirectly related to the employment, prospective employment, past employment or termination of employment of any person by any **Insured**.

Premises Related Discrimination

discrimination or humiliation arising out of the sale, rental, lease or sub-lease or prospective sale, rental, lease or sub-lease of any room, dwelling or premises by or at the direction of any **Insured**.

Notwithstanding the above, there is no coverage for fines or penalties levied or imposed by a governmental entity because of discrimination.

The coverage provided by this **PERSONAL AND ADVERTISING INJURY –DISCRIMINATION OR HUMILIATION** Provision does not apply to any person or organization whose status as an **Insured** derives solely from

Provision **1. ADDITIONAL INSURED** of this endorsement; or

attachment of an additional insured endorsement to this **Coverage Part**.

This **PERSONAL AND ADVERTISING INJURY –DISCRIMINATION OR HUMILIATION** Provision does not apply to any person or organization who otherwise qualifies as an additional insured on this **Coverage Part**.

21. PERSONAL AND ADVERTISING INJURY - CONTRACTUAL LIABILITY

A. Under **COVERAGES**, **Coverage B –Personal and Advertising Injury Liability**, the paragraph entitled **Exclusions** is amended to delete the exclusion entitled **Contractual Liability**.

B. Solely for the purpose of the coverage provided by this **PERSONAL AND ADVERTISING INJURY - CONTRACTUAL LIABILITY** provision, the following changes are made to the section entitled **SUPPLEMENTARY PAYMENTS – COVERAGES A AND B:**

1. Paragraph **2.d.** is replaced by the following:

d. The allegations in the **suit** and the information the Insurer knows about the offense alleged in such **suit** are such that no conflict appears to exist between the interests of the **Insured** and the interests of the indemnitee;

2. The first unnumbered paragraph beneath Paragraph **2.f.(2)(b)** is deleted and replaced by the following:

So long as the above conditions are met, attorneys fees incurred by the Insurer in the defense of that indemnitee, necessary litigation expenses incurred by the Insurer, and necessary litigation expenses incurred by the indemnitee at the Insurer's request will be paid as **defense costs**. Such payments will not be deemed to be **damages** for **personal and advertising injury** and will not reduce the limits of insurance.

C. This **PERSONAL AND ADVERTISING INJURY - CONTRACTUAL LIABILITY** Provision does not apply if **Coverage B –Personal and Advertising Injury Liability** is excluded by another endorsement attached to this **Coverage Part**.

This **PERSONAL AND ADVERTISING INJURY - CONTRACTUAL LIABILITY** Provision does not apply to any person or organization who otherwise qualifies as an additional insured on this **Coverage Part**.

22. PROPERTY DAMAGE – ELEVATORS

A. Under **COVERAGES**, **Coverage A – Bodily Injury and Property Damage Liability**, the paragraph entitled **Exclusions** is amended such that the **Damage to Your Product** Exclusion and subparagraphs **(3)**, **(4)** and **(6)** of the **Damage to Property** Exclusion do not apply to **property damage** that results from the use of elevators.

Copyright CNA All Rights Reserved. Includes copyrighted material of Insurance Services Office, Inc., with its permission.

000007 - 0326 of 0440 - NNNNNN - 01372 JOBID 3AE4C007568

B. Solely for the purpose of the coverage provided by this **PROPERTY DAMAGE – ELEVATORS** Provision, the **Other Insurance** conditions is amended to add the following paragraph:

This insurance is excess over any of the other insurance, whether primary, excess, contingent or on any other basis that is Property insurance covering property of others damaged from the use of elevators.

23. SUPPLEMENTARY PAYMENTS

The section entitled **SUPPLEMENTARY PAYMENTS – COVERAGES A AND B** is amended as follows:

A. Paragraph **1.b.** is amended to delete the $250 limit shown for the cost of bail bonds and replace it with a $5,000. limit; and

B. Paragraph **1.d.** is amended to delete the limit of $250 shown for daily loss of earnings and replace it with a $1,000. limit.

24. UNINTENTIONAL FAILURE TO DISCLOSE HAZARDS

If the **Named Insured** unintentionally fails to disclose all existing hazards at the inception date of the **Named Insured's Coverage Part**, the Insurer will not deny coverage under this **Coverage Part** because of such failure.

25. WAIVER OF SUBROGATION - BLANKET

Under **CONDITIONS**, the condition entitled **Transfer Of Rights Of Recovery Against Others To Us** is amended to add the following:

The Insurer waives any right of recovery the Insurer may have against any person or organization because of payments the Insurer makes for injury or damage arising out of:

1. the **Named Insured's** ongoing operations; or

2. **your work** included in the **products-completed operations hazard**.

However, this waiver applies only when the **Named Insured** has agreed in writing to waive such rights of recovery in a written contract or written agreement, and only if such contract or agreement:

1. is in effect or becomes effective during the term of this **Coverage Part**; and

2. was executed prior to the **bodily injury**, **property damage** or **personal and advertising injury** giving rise to the **claim**.

26. WRAP-UP EXTENSION: OCIP, CCIP, OR CONSOLIDATED (WRAP-UP) INSURANCE PROGRAMS

Note: The following provision does not apply to any public construction project in the state of Oklahoma, nor to any construction project in the state of Alaska, that is not permitted to be insured under a **consolidated (wrap-up) insurance program** by applicable state statute or regulation.

If the endorsement **EXCLUSION – CONSTRUCTION WRAP-UP** is attached to this policy, or another exclusionary endorsement pertaining to Owner Controlled Insurance Programs (O.C.I.P.) or Contractor Controlled Insurance Programs (C.C.I.P.) is attached, then the following changes apply:

A. The following wording is added to the above-referenced endorsement:

With respect to a **consolidated (wrap-up) insurance program** project in which the **Named Insured** is or was involved, this exclusion does not apply to those sums the **Named Insured** become legally obligated to pay as **damages** because of:

1. **Bodily injury**, **property damage**, or **personal or advertising injury** that occurs during the **Named Insured's** ongoing operations at the project, or during such operations of anyone acting on the **Named Insured's** behalf; nor

Copyright CNA All Rights Reserved. Includes copyrighted material of Insurance Services Office, Inc., with its permission.

2. **Bodily injury** or **property damage** included within the **products-completed operations hazard** that arises out of those portions of the project that are not **residential structures**.

B. Condition **4. Other Insurance** is amended to add the following subparagraph **4.b.(1)(c)**:

This insurance is excess over:

(c) Any of the other insurance whether primary, excess, contingent or any other basis that is insurance available to the **Named Insured** as a result of the **Named Insured** being a participant in a **consolidated (wrap-up) insurance program**, but only as respects the **Named Insured's** involvement in that **consolidated (wrap-up) insurance program**.

C. **DEFINITIONS** is amended to add the following definitions:

Consolidated (wrap-up) insurance program means a construction, erection or demolition project for which the prime contractor/project manager or owner of the construction project has secured general liability insurance covering some or all of the contractors or subcontractors involved in the project, such as an Owner Controlled Insurance Program (O.C.I.P.) or Contractor Controlled Insurance Program (C.C.I.P.).

Residential structure means any structure where 30% or more of the square foot area is used or is intended to be used for human residency, including but not limited to:

1. single or multifamily housing, apartments, condominiums, townhouses, co-operatives or planned unit developments; and

2. the common areas and structures appurtenant to the structures in paragraph **1.** (including pools, hot tubs, detached garages, guest houses or any similar structures).

However, when there is no individual ownership of units, **residential structure** does not include military housing, college/university housing or dormitories, long term care facilities, hotels or motels. **Residential structure** also does not include hospitals or prisons.

This **WRAP-UP EXTENSION: OCIP, CCIP, OR CONSOLIDATED (WRAP-UP) INSURANCE PROGRAMS** Provision does not apply to any person or organization who otherwise qualifies as an additional insured on this **Coverage Part**.

All other terms and conditions of the Policy remain unchanged.

This endorsement, which forms a part of and is for attachment to the Policy issued by the designated Insurers, takes effect on the effective date of said Policy at the hour stated in said Policy, unless another effective date is shown below, and expires concurrently with said Policy.

000007 - 0327 of 0440 = NNNNNN - 01373 JOBID 3AE4C007568

Copyright CNA All Rights Reserved. Includes copyrighted material of Insurance Services Office, Inc., with its permission.

Blanket Additional Insured - Owners, Lessees or Contractors - with Products-Completed Operations Coverage Endorsement

This endorsement modifies insurance provided under the following:

COMMERCIAL GENERAL LIABILITY COVERAGE PART

It is understood and agreed as follows:

I. **WHO IS AN INSURED** is amended to include as an **Insured** any person or organization whom you are required by **written contract** to add as an additional insured on this **Coverage Part**, but only with respect to liability for **bodily injury**, **property damage** or **personal and advertising injury** caused in whole or in part by your acts or omissions, or the acts or omissions of those acting on your behalf:

A. In the performance of your ongoing operations subject to such **written contract**; or

B. In the performance of **your work** subject to such **written contract**, but only with respect to **bodily injury** or **property damage** included in the **products-completed operations hazard**, and only if:

1. The **written contract** requires you to provide the additional insured such coverage; and

2. This **Coverage Part** provides such coverage; and

C. Subject always to the terms and conditions of this policy, including the limits of insurance, the Insurer will not provide such additional insured with:

1. Coverage broader than what you are required to provide by the **written contract**; or

2. A higher limit of insurance than what you are required to provide by the **written contract**.

Any coverage granted by this Paragraph **I.** shall apply solely to the extent permissible by law.

II. If the written contract requires additional insured coverage under the 07-04 edition of CG2010 or CG2037, then paragraph **I.** above is deleted in its entirety and replaced by the following:

WHO IS AN INSURED is amended to include as an **Insured** any person or organization whom you are required by **written contract** to add as an additional insured on this **Coverage Part**, but only with respect to liability for **bodily injury**, **property damage** or **personal and advertising injury** caused in whole or in part by your acts or omissions, or the acts or omissions of those acting on your behalf:

A. In the performance of your ongoing operations subject to such **written contract**; or

B. In the performance of **your work** subject to such **written contract**, but only with respect to **bodily injury** or **property damage** included in the **products-completed operations hazard**, and only if:

1. The **written contract** requires you to provide the additional insured such coverage; and

2. This **Coverage Part** provides such coverage.

III. But if the **written contract** requires:

A. Additional insured coverage under the 11-85 edition, 10-93 edition, or 10-01 edition of CG2010, or under the 10-01 edition of CG2037; or

B. Additional insured coverage with "arising out of" language;

then paragraph **I.** above is deleted in its entirety and replaced by the following:

WHO IS AN INSURED is amended to include as an **Insured** any person or organization whom you are required by **written contract** to add as an additional insured on this **Coverage Part**, but only with respect to liability for **bodily injury**, **property damage** or **personal and advertising injury** arising out of **your work** that is subject to such **written contract**.

000007 - 0341 of 0440 - NNNNNN - 01387 JOBID 3AE4C007568

Copyright CNA All Rights Reserved.

IV. But if the **written contract** requires additional insured coverage to the greatest extent permissible by law, then paragraph **I.** above is deleted in its entirety and replaced by the following:

WHO IS AN INSURED is amended to include as an **insured** any person or organization whom you are required by **written contract** to add as an additional insured on this **Coverage Part**, but only with respect to liability for **bodily injury**, **property damage** or **personal and advertising injury** arising out of **your work** that is subject to such **written contract**.

V. The insurance granted by this endorsement to the additional insured does not apply to **bodily injury**, **property damage**, or **personal and advertising injury** arising out of:

A. The rendering of, or the failure to render, any professional architectural, engineering, or surveying services, including:

1. The preparing, approving, or failing to prepare or approve maps, shop drawings, opinions, reports, surveys, field orders, change orders or drawings and specifications; and

2. Supervisory, inspection, architectural or engineering activities; or

B. Any premises or work for which the additional insured is specifically listed as an additional insured on another endorsement attached to this **Coverage Part**.

VI. Under **COMMERCIAL GENERAL LIABILITY CONDITIONS,** the Condition entitled **Other Insurance** is amended to add the following, which supersedes any provision to the contrary in this Condition or elsewhere in this **Coverage Part**:

Primary and Noncontributory Insurance

With respect to other insurance available to the additional insured under which the additional insured is a named insured, this insurance is primary to and will not seek contribution from such other insurance, provided that a **written contract** requires the insurance provided by this policy to be:

1. Primary and non-contributing with other insurance available to the additional insured; or

2. Primary and to not seek contribution from any other insurance available to the additional insured.

But except as specified above, this insurance will be excess of all other insurance available to the additional insured.

VII. Solely with respect to the insurance granted by this endorsement, the section entitled **COMMERCIAL GENERAL LIABILITY CONDITIONS** is amended as follows:

The Condition entitled **Duties In The Event of Occurrence, Offense, Claim or Suit** is amended with the addition of the following:

Any additional insured pursuant to this endorsement will as soon as practicable:

1. Give the Insurer written notice of any **claim**, or any **occurrence** or offense which may result in a **claim**;

2. Send the Insurer copies of all legal papers received, and otherwise cooperate with the Insurer in the investigation, defense, or settlement of the **claim**; and

3. Make available any other insurance, and endeavor to tender the defense and indemnity of any **claim** to any other insurer or self-insurer, whose policy or program applies to a loss that the Insurer covers under this **coverage part**. However, if the **written contract** requires this insurance to be primary and non-contributory, this paragraph **3.** does not apply to other insurance under which the additional insured is a named insured.

The Insurer has no duty to defend or indemnify an additional insured under this endorsement until the Insurer receives written notice of a **claim** from the additional insured.

Copyright CNA All Rights Reserved.

Blanket Additional Insured - Owners, Lessees or Contractors - with Products-Completed Operations Coverage Endorsement

VIII. Solely with respect to the insurance granted by this endorsement, the section entitled **DEFINITIONS** is amended to add the following definition:

Written contract means a written contract or written agreement that requires you to make a person or organization an additional insured on this **Coverage Part**, provided the contract or agreement:

A. Was executed prior to:

1. The **bodily injury** or **property damage**; or

2. The offense that caused the **personal and advertising injury**;

for which the additional insured seeks coverage; and

B. Is still in effect at the time of the **bodily injury** or **property damage occurrence** or **personal and advertising injury** offense.

All other terms and conditions of the Policy remain unchanged.

This endorsement, which forms a part of and is for attachment to the Policy issued by the designated Insurers, takes effect on the effective date of said Policy at the hour stated in said Policy, unless another effective date is shown below, and expires concurrently with said Policy.

000007 - 0342 of 0440 - NNNNNN - 01388 JOBID 3AE4C007568

Copyright CNA All Rights Reserved.

CONTRACTORS EXTENDED COVERAGE ENDORSEMENT - BUSINESS AUTO PLUS

THIS ENDORSEMENT CHANGES THE POLICY. PLEASE READ IT CAREFULLY.

This endorsement modifies insurance provided under the following:

BUSINESS AUTO COVERAGE FORM

I. LIABILITY COVERAGE

A. Who Is An Insured

The following is added to **Section II, Paragraph A.1., Who Is An Insured**:

1. **a.** Any incorporated entity of which the Named Insured owns a majority of the voting stock on the date of inception of this Coverage Form; provided that,

   b. The insurance afforded by this provision **A.1.** does not apply to any such entity that is an **insured** under any other liability "policy" providing **auto** coverage.

2. Any organization you newly acquire or form, other than a limited liability company, partnership or joint venture, and over which you maintain majority ownership interest.

   The insurance afforded by this provision **A.2.**:

   a. Is effective on the acquisition or formation date, and is afforded only until the end of the policy period of this Coverage Form, or the next anniversary of its inception date, whichever is earlier.

   b. Does not apply to:

   (1) **Bodily injury** or **property damage** caused by an **accident** that occurred before you acquired or formed the organization; or

   (2) Any such organization that is an **insured** under any other liability "policy" providing **auto** coverage.

3. Any person or organization that you are required by a written contract to name as an additional insured is an **insured** but only with respect to their legal liability for acts or omissions of a person, who qualifies as an **insured** under **SECTION II – WHO IS AN INSURED** and for whom Liability Coverage is afforded under this policy. If required by written contract, this insurance will be primary and non-contributory to insurance on which the additional insured is a Named Insured.

4. An **employee** of yours is an **insured** while operating an **auto** hired or rented under a contract or agreement in that **employee's** name, with your permission, while performing duties related to the conduct of your business.

"Policy", as used in this provision **A. Who Is An Insured,** includes those policies that were in force on the inception date of this Coverage Form but:

1. Which are no longer in force; or

2. Whose limits have been exhausted.

B. Bail Bonds and Loss of Earnings

Section II, Paragraphs A.2. (2) and A.2. (4) are revised as follows:

1. In **a.(2),** the limit for the cost of bail bonds is changed from $2,000 to $5,000; and

2. In **a.(4),** the limit for the loss of earnings is changed from $250 to $500 a day.

© Copyright CNA All Rights Reserved. Includes copyrighted material of the Insurance Services Office, Inc., used with its permission.

C. Fellow Employee

Section II, Paragraph B.5 does not apply.

Such coverage as is afforded by this provision C. is excess over any other collectible insurance.

II. PHYSICAL DAMAGE COVERAGE

A. Glass Breakage – Hitting A Bird Or Animal – Falling Objects Or Missiles

The following is added to **Section III, Paragraph A.3.**:

With respect to any covered **auto**, any deductible shown in the Declarations will not apply to glass breakage if such glass is repaired, in a manner acceptable to us, rather than replaced.

B. Transportation Expenses

Section III, Paragraph A.4.a. is revised, with respect to transportation expense incurred by you, to provide:

a. $60 per day, in lieu of $20; subject to

b. $1,800 maximum, in lieu of $600.

C. Loss of Use Expenses

Section III, Paragraph A.4.b. is revised, with respect to loss of use expenses incurred by you, to provide:

a. $1,000 maximum, in lieu of $600.

D. Hired "Autos"

The following is added to **Section III. Paragraph A.**:

5. Hired "Autos"

If Physical Damage coverage is provided under this policy, and such coverage does not extend to Hired Autos, then Physical Damage coverage is extended to:

a. Any covered **auto** you lease, hire, rent or borrow without a driver; and

b. Any covered **auto** hired or rented by your **employee** without a driver, under a contract in that individual **employee's** name, with your permission, while performing duties related to the conduct of your business.

c. The most we will pay for any one **accident** or **loss** is the actual cash value, cost of repair, cost of replacement or $75,000, whichever is less, minus a $500 deductible for each covered auto. No deductible applies to **loss** caused by fire or lightning.

d. The physical damage coverage as is provided by this provision is equal to the physical damage coverage(s) provided on your owned **autos.**

e. Such physical damage coverage for hired **autos** will:

(1) Include loss of use, provided it is the consequence of an **accident** for which the Named Insured is legally liable, and as a result of which a monetary loss is sustained by the leasing or rental concern.

(2) Such coverage as is provided by this provision will be subject to a limit of $750 per **accident.**

E. Airbag Coverage

The following is added to **Section III, Paragraph B.3.**:

The accidental discharge of an airbag shall not be considered mechanical breakdown.

© Copyright CNA All Rights Reserved. Includes copyrighted material of the Insurance Services Office, Inc., used with its permission.

F. Electronic Equipment

Section III, Paragraphs B.4.c and B.4.d. are deleted and replaced by the following:

c. Physical Damage Coverage on a covered **auto** also applies to **loss** to any permanently installed electronic equipment including its antennas and other accessories

d. A $100 per occurrence deductible applies to the coverage provided by this provision.

G. Diminution In Value

The following is added to **Section III, Paragraph B.6.**:

Subject to the following, the **diminution in value** exclusion does not apply to:

a. Any covered **auto** of the private passenger type you lease, hire, rent or borrow, without a driver for a period of 30 days or less, while performing duties related to the conduct of your business; and

b. Any covered **auto** of the private passenger type hired or rented by your **employee** without a driver for a period of 30 days or less, under a contract in that individual **employee's** name, with your permission, while performing duties related to the conduct of your business.

c. Such coverage as is provided by this provision is limited to a **diminution in value** loss arising directly out of accidental damage and not as a result of the failure to make repairs; faulty or incomplete maintenance or repairs; or the installation of substandard parts.

d. The most we will pay for **loss** to a covered **auto** in any one accident is the lesser of:

(1) $5,000; or

(2) 20% of the **auto's** actual cash value (ACV).

III. Drive Other Car Coverage – Executive Officers

The following is added to **Sections II and III**:

1. Any **auto** you don't own, hire or borrow is a covered **auto** for Liability Coverage while being used by, and for Physical Damage Coverage while in the care, custody or control of, any of your "executive officers", except:

a. An **auto** owned by that "executive officer" or a member of that person's household; or

b. An **auto** used by that "executive officer" while working in a business of selling, servicing, repairing or parking **autos.**

Such Liability and/or Physical Damage Coverage as is afforded by this provision.

(1) Equal to the greatest of those coverages afforded any covered **auto**; and

(2) Excess over any other collectible insurance.

2. For purposes of this provision, "executive officer" means a person holding any of the officer positions created by your charter, constitution, by-laws or any other similar governing document, and, while a resident of the same household, includes that person's spouse.

Such "executive officers" are **insureds** while using a covered **auto** described in this provision.

IV. BUSINESS AUTO CONDITIONS

A. Duties In The Event Of Accident, Claim, Suit Or Loss

The following is added to **Section IV, Paragraph A.2.a.**:

© Copyright CNA All Rights Reserved. Includes copyrighted material of the Insurance Services Office, Inc., used with its permission.

(4) Your **employees** may know of an **accident** or **loss**. This will not mean that you have such knowledge, unless such **accident** or **loss** is known to you or if you are not an individual, to any of your executive officers or partners or your insurance manager.

The following is added to **Section IV, Paragraph A.2.b.**:

(6) Your **employees** may know of documents received concerning a claim or **suit**. This will not mean that you have such knowledge, unless receipt of such documents is known to you or if you are not an individual, to any of your executive officers or partners or your insurance manager.

B. Transfer Of Rights Of Recovery Against Others To Us

The following is added to **Section IV, Paragraph A.5. Transfer Of Rights Of Recovery Against Others To Us**:

We waive any right of recovery we may have, because of payments we make for injury or damage, against any person or organization for whom or which you are required by written contract or agreement to obtain this waiver from us.

This injury or damage must arise out of your activities under a contract with that person or organization.

You must agree to that requirement prior to an **accident** or **loss.**

C. Concealment, Misrepresentation or Fraud

The following is added to **Section IV, Paragraph B.2.**:

Your failure to disclose all hazards existing on the date of inception of this Coverage Form shall not prejudice you with respect to the coverage afforded provided such failure or omission is not intentional.

D. Other Insurance

The following is added to **Section IV, Paragraph B.5.**:

Regardless of the provisions of Paragraphs **5.a.** and **5.d.** above, the coverage provided by this policy shall be on a primary non-contributory basis. This provision is applicable only when required by a written contract.

That written contract must have been entered into prior to **Accident** or **Loss.**

E. Policy Period, Coverage Territory

Section IV, Paragraph B. 7.(5).(a). is revised to provide:

a. 45 days of coverage in lieu of 30 days.

V. DEFINITIONS

Section V. paragraph C. is deleted and replaced by the following:

Bodily injury means bodily injury, sickness or disease sustained by a person, including mental anguish, mental injury or death resulting from any of these.

© Copyright CNA All Rights Reserved. Includes copyrighted material of the Insurance Services Office, Inc., used with its permission.

BUILDERS TRUST®
OF NEW MEXICO

WAIVER OF SUBROGATION

Insured Name: B & D INDUSTRIES INC
Insured Policy Number: WC100-0005672-2026A

Builders Trust of New Mexico waives any right of recovery of subrogation against the certificate holder named on this certificate of insurance, but only to the extent that the employers to whom we provide coverage performs work under a written contract with the certificate holder that requires this waiver.

Name of Person	Name of Organization
	Blanket Waiver of Subrogation

Date: 12/5/2025 Countersigned by Randy L. Akin

Agency Number: 24 – 28
Agency Name: HUB International Insurance Services, Inc. (ABQ)

(505) 345-3477 ■ 1-800-640-3369 ■ FAX (505) 344-7245
5931 OFFICE BOULEVARD, NE SUITE 3 ALBUQUERQUE, NM 87109 ■ P.O. BOX 91330 ALBUQUERQUE, NM 87199-1330
www.builderstrust.com

CITY OF SANTA FE

Date: December 3, 2025

To: Governing Body

From: Caryn Grosse, PMP, Public Works Project Manager III

Via: Sam Burnett, Interim Public Works Department Director JOHN BURNETT (Dec 8, 2025 07:52:37 MST)
Tim Farrell, Interim Facilities Division Director Timothy Farrell

Subject: On-Call Price Agreement for City-Wide Miscellaneous Construction Services

Vendor Name: B&D Industries Inc.

Vendor Number: 3970

ACTION:
Request for Approval of an On-Call Price Agreement with B&D Industries Inc.in the Total Amount of $10,000,000 Including NMGRT for City-Wide Miscellaneous Construction Services for a Term of 10 Years. (Caryn Grosse, Public Works Project Manager III, clgrosse@santafenm.gov)

CONTRACT NUMBER:
The FY26 Munis Contract Number is 3260204.

BACKGROUND AND SUMMARY:
The Public Works Department Facilities Division uses on-call services to augment the skills, licensure, and capacity of staff to address facility issues and emergencies in a timely, safe, and compliant manner. The Facilities Division typically maintains on-call contracts for general contracting, mechanical, electrical, plumbing, roofing, remediation, and landscaping services.

In accordance with the Invitation to Bid (ITB No. 25163) for On-Call City-Wide Miscellaneous Construction Services, multiple responsive vendors were selected for contracts based on lowest bidder and performance criteria: AnchorBuilt Inc., B&D Industries Inc., Davenport Construction Management LLC, Enviroworks LLC, JDR & Associates, LLR Construction LLC, and Unified Contractor, Inc. B&D Industries has provided services throughout the City and has proven to be cost-effective, reliable, and capable of consistently providing high quality results.

On-call contracts are not a guarantee of payment. These contracts are only used, and purchase orders issued, as needs arise and funding is available. The $10,000,000 (including 8.1875% NMGRT) maximum for this contract is based on the historical and anticipated needs across the City over the next ten years.

ATTACHMENTS:
On-Call Price Agreement for Construction Services
Proposal – Exhibit A
Certificate of Insurance
CPO Determination
Horizons Service List

PROCUREMENT METHOD:
The procurement method for this contract is the Invitation to Bid No. 25163, dated April 24, 2025.

Chief Procurement Officer (CPO)/Designee: JoAnn Lovato Montaño Date: 12/23/2025
CPO Comment/Exceptions: _____

FUNDING SOURCE:
Funding will be provided on a project-by-project basis.
Fund Name/Number: Various
Munis Org Name/Number: Various
Munis Object Name/Number: Various

Budget Officer/Designee: Andy Hopkins Date: 12/19/2025
Budget Officer Comment/Exceptions: _____

ASSOCIATED APPROVALS:
IT Components included? ☐ Yes | ☒ No
Approval: _____ Title: _____ Date: _____
Comment/Exceptions: _____

Treasury/Point of Sale Components included? ☐ Yes | ☒ No
Approval: _____ Title: _____ Date: _____
Comment/Exceptions: _____

Vehicles included? ☐ Yes | ☒ No
Approval: _____ Title: _____ Date: _____
Comment/Exceptions: _____

Construction to City Facilities, Furniture, and/or Fixtures, included? ☒ Yes | ☐ No
Approval: _____ Title: _____ Date: _____
Comment/Exceptions: Timothy Farrell

Is this an externally funded purchase? ☐ Yes | ☒ No
If yes, what is the issuing agency: _____
Approval: _____ Title: _____ Date: _____
Comment/Exceptions: _____

Capital Asset or Project? ☐ Yes | ☒ No
Project Ledger Number _____
Approval: _____ Title: _____ Date: _____
Comment/Exceptions: _____

Item #: _____
Munis Contract #: 3260204
ITB No.: 25163

CITY OF SANTA FE

ON-CALL PRICE AGREEMENT

CONSTRUCTION CONTRACT

City-Wide Miscellaneous Construction Services

THIS CONTRACT is made and entered into by and between the City of Santa Fe, New Mexico, hereinafter referred to as the "City," and **B&D Industries, Inc.**, hereinafter referred to as the "Contractor," and is effective as of the date set forth below upon which it is executed by the Parties.

RECITALS

WHEREAS, the City, through its Governing Body, is authorized to enter into an On-Call Price Agreement for the project; and

WHEREAS, the City has procured this Contract according to the established State and Local Purchasing procedures for contracts of the type and amount; and

The City and the Contractor hereby agree as follows:

1. Scope of Work

A. The Contractor shall perform the following work in accordance with their Bid Pricing, attached hereto and made a part thereof, as Exhibit A:

1. This work shall include Miscellaneous General Contracting work for the City of Santa Fe.
2. The Contractor shall be required to provide On-Call Miscellaneous Construction Services for any number of the activities listed under this Scope of Work upon the request of the City. Once a need is identified, the City's Engineers, Project Managers, and Project Administrators (collectively "Project Manager") may issue Task Orders for items described herein. The terms and conditions shall be incorporated in each Task Order issued hereunder. Once a need is identified, the Project Manager will issue a written Task Order to the Contractor detailing the services required. Upon receiving the Task Order, the Contractor shall promptly provide the Project Manager with an estimate, based upon the rates included in their ITB, a cost summary, and a proposed schedule required to complete the assignment or task. Project schedules, negotiated price, and completion dates shall be determined on project-by-project basis and dependent upon the urgency of that task. The

Contractor may be required to do some of the work in phases. The City's Project Manager may issue a Notice to Proceed by signing the Notice after the task price and schedule are finalized by the Contractor, subject to the exception in Article 1(A)(3) below. The Contractor shall be required to provide the requested labor and all equipment and materials within one week of a request issuance of a Notice to Proceed unless otherwise arranged. The Contractor shall agree to provide required labor within 24 hours for emergency situations whenever possible. The Contractor shall not perform any work without a Notice to Proceed signed by the Project Manager, and the City shall not pay for any work performed without a signed Notice to Proceed.

3. If a Task Order does not specify which City division is issuing the Task Order, Contractor shall enquire before acting on a Notice to Proceed. For any City division other than the Public Works Facilities Division the Notice to Proceed is effective only if written approval of the scope of work from the Facilities Division Director is attached.

4. Contractor is responsible for all required permits, licenses, and inspections required to perform this work, and shall comply with applicable municipal, county, state, and federal requirements. Contractor shall be responsible for verification of all existing conditions, measurements, dimensions, adherence to the Contract Documents, Construction Documents, Specifications, and approved directives.

B. Distribution:

City:	Contractor:
Caryn Grosse, PMP Project Manager III City of Santa Fe Facilities Division 2651 Siringo Road, Building E Santa Fe, NM 87505-5229	Christopher Giovenco Director – Service B&D Industries Inc. 9720 Bell Ave SE Albuquerque, NM 87123

C. Price Adjustments:

The awarded vendor shall maintain fixed pricing for each year of this contract, defined as twelve (12) months starting on and including the Effective Date. Pricing may be adjusted no more than once annually to commercially reasonable rates through an amendment to the price list attached as Exhibit A signed by Contractor and the City's Director of Public Works. Amendments to Exhibit A do not alter Contractor's maximum total compensation pursuant to Article 2 (Compensation) below. The Contractor must submit all pricing increase requests in writing to the City of Santa Fe designated department contact, providing evidence that the request is based on demonstrable market changes impacting the cost of products and services. The request must itemize all proposed changes by line item and include supporting documentation deemed acceptable by the City of Santa Fe (such as a letter from a manufacturer indicating price increases, etc.). The City's decision on acceptable documentation in this context shall be final and binding upon all parties to the contract. No price increase shall result in a higher profit margin. Pricing changes will apply to orders entered on or after the effective date of the price change. Price increases will not be retroactive to purchase orders already issued. Orders will be filled at the price indicated in the purchase order issued by the City.

To facilitate prompt consideration, all requests for price increases must include the following information:

i. Contract Item Number
ii. Current Item Price
iii. Proposed New Price
iv. Percentage of Increase
v. Mill/Supplier Notification of price increase indicating percentage of increase and including the reason for the increase.

2. ITB Compensation

A. Payment. The City shall compensate the Contractor based on Task Orders and the itemized amounts specified in Exhibit A. For the services described in the scope of work, the City will pay the Contractor up to, but not to exceed, $10,000,000.00. The applicable gross receipts tax (8.1875%) shall be shown as a separate amount on each billing or request for payment made under the contract, consistent with NMSA 1978, Section 13-1-108.

B. The compensation represents a maximum amount. The Contractor must notify the City when the Services provided under this Contract approach 90% of compensation total. Services rendered beyond the maximum compensation amount will not be reimbursed unless the Contract is amended in writing prior to the provision of such services.

C. Invoicing and Payment Terms Payment will be made upon the City's acceptance of deliverables and receipt of a detailed, certified invoice from the Contractor. Payments will be sent to the Contractor's designated address. The City shall issue payment in accordance with the timelines required by law. Invoices must be submitted no later than fifteen (15) days after the Contract's termination. Late invoices will not be processed or paid.

D. Extended Payment Terms for Grant-Funded Contracts. For grant-funded agreements, the City may issue payment within forty-five (45) days following submission of an undisputed payment request.

3. Term

THIS CONTRACT SHALL NOT BECOME EFFECTIVE UNTIL APPROVED BY THE CITY. This Contract shall terminate ten (10) years from date of final signature unless terminated pursuant to Paragraph 4 (Termination) or Paragraph 5 (Appropriations). A contract for construction services may not exceed ten (10) years, including all extensions and renewals, except as otherwise provided by NMSA 1978, Section 13-1-150 through 13-1-152 or SFCC 1987, Section 11-13.

4. Termination

A. Grounds. The City may terminate this Contract for convenience or cause. For contracts within their authority, the City Manager or their designee is authorized to provide the notice of termination, otherwise such notice of termination shall be provided by the Mayor or their designee as authorized by the Governing Body. The Contractor may only terminate this Contract based upon

the City's uncured, material breach of this Contract.

i. Except as otherwise provided in Paragraphs 7.A and 17, the City shall give Contractor written notice of termination at least thirty (30) days prior to the intended date of termination.

ii. Contractor shall give City written notice of termination at least thirty (30) days prior to the intended date of termination, which notice shall (i) identify all the City's material breaches of this Contract upon which the termination is based and (ii) state what the City must do to cure such material breaches. Contractor's notice of termination shall only be effective (i) if the City does not cure all material breaches within the thirty (30) day notice period or (ii) in the case of material breaches that cannot be cured within thirty (30) days, the City does not, within the thirty (30) day notice period, notify the Contractor of its intent to cure and begin with due diligence to cure the material breach.

iii. Notwithstanding the foregoing, this Contract may be terminated immediately upon written notice to the Contractor (i) if the Contractor becomes unable to perform the services contracted for, as determined by the City; (ii) if, during the term of this Contract, the Contractor is suspended or debarred by the City; or (iii) the Contract is terminated pursuant to Paragraph 5, "Appropriations," of this Contract.

B. Liability. Except as otherwise expressly allowed or provided under this Contract, the City's sole liability upon termination shall be to pay for acceptable work performed prior to the Contractor's receipt or issuance of a notice of termination; provided, however, that a notice of termination shall not nullify or otherwise affect either party's liability for pre-termination defaults under or breaches of this Contract. The Contractor shall submit an invoice for such work within thirty (30) days of receiving or sending the notice of termination. *THIS PROVISION IS NOT EXCLUSIVE AND DOES NOT WAIVE THE CITY'S OTHER LEGAL RIGHTS AND REMEDIES CAUSED BY THE CONTRACTOR'S DEFAULT/BREACH OF THIS CONTRACT.*

5. Appropriations

The terms of this Contract are contingent upon sufficient appropriations and authorization being made by the Governing Body for the performance of this Contract. If sufficient appropriations and authorization are not made by the Governing Body, this Contract shall terminate immediately upon written notice being given by the City to the Contractor. The City's decision as to whether sufficient appropriations are available shall be accepted by the Contractor and shall be final. If the City proposes an amendment to the Contract to unilaterally reduce funding, the Contractor shall have the option to terminate the Contract or to agree to the reduced funding, within thirty (30) days of receipt of the proposed amendment.

6. Status of Contractor

The Contractor and its agents and employees are independent contractors performing construction services for the City and are not employees of the City. The Contractor and its agents and employees shall not accrue leave, retirement, insurance, bonding, use of City vehicles, or any other benefits afforded to employees of the City as a result of this Contract. The Contractor acknowledges that all sums received hereunder are reportable by the Contractor for tax purposes, including without limitation, self-employment

and business income tax. The Contractor agrees not to purport to bind the City unless the Contractor has express written authority to do so, and then only within the strict limits of that authority.

7. On-Call Price Agreement Performance and Payment Bond

A. When a Task Order is issued in excess of twenty-five thousand dollars ($25,000), the following bonds or security shall be delivered to the City and shall become binding on the parties upon the execution of the contract. If the Contractor fails to deliver the required performance and payment bonds, the Contractor's bid shall be rejected, its bid security shall be enforced to the extent of actual damages. Award of the Task Order via Notice to Proceed shall be made pursuant to the Procurement Code in the following manner:

i. a performance bond satisfactory to the City, executed by a surety company authorized to do business in this state and said surety to be approved in federal circular 570 as published by the United States treasury department or the state board of finance or the local governing authority, in an amount equal to one hundred percent of the price specified in the contract; and

ii. a payment bond satisfactory to the City, executed by a surety company authorized to do business in this state and said surety to be approved in federal circular 570 as published by the United States treasury department or the state board of finance or the local governing authority, in an amount equal to one hundred percent of the price specified in the contract, for the protection of all persons supplying labor and material to the contractor or its subcontractors for the performance of the work provided for in the contract.

B. A subcontractor shall provide a performance and payment bond on a public works building project if the subcontractor's contract for work to be performed on a project is one hundred twenty-five thousand dollars ($125,000) or more.

8. Assignment

The Contractor shall not assign or transfer any interest in this Contract or assign any claims for money due or to become due under this Contract without the prior written approval of the City.

9. Subcontracting

The Contractor shall not subcontract any portion of the services to be performed under this Contract without the prior written approval of the City. No such subcontract shall relieve the primary Contractor from its obligations and liabilities under this Contract, nor shall any subcontract obligate direct payment from the City.

10. Release

Final payment of the amounts due under this Contract shall operate as a release of the City, its officers and employees from all liabilities, claims and obligations whatsoever arising from or under this Contract.

11. Confidentiality

Any confidential information provided to or developed by the Contractor in the performance of this Contract shall be kept confidential and shall not be made available to any individual or organization by the Contractor without the prior written approval of the City.

12. Product of Service – Copyright

All materials developed or acquired by the Contractor under this Contract shall become the property of the City and shall be delivered to the City no later than the termination date of this Contract. Nothing developed or produced, in whole or in part, by the Contractor under this Contract shall be the subject of an application for copyright or other claim of ownership by or on behalf of the Contractor.

13. Conflict of Interest; Governmental Conduct Act

A. The Contractor represents and warrants that it presently has no interest and, during the term of this Contract, shall not acquire any interest, direct or indirect, which would conflict in any manner or degree with the performance or services required under the Contract.

B. The Contractor further represents and warrants that it has complied with, and, during the term of this Contract, will continue to comply with, and that this Contract complies with all applicable provisions of the Governmental Conduct Act, NMSA 1978, Chapter 10, Article 16.

C. Contractor's representations and warranties in Paragraphs A and B of this Article 12 are material representations of fact upon which the City relied when this Contract was entered into by the parties. Contractor shall provide immediate written notice to the City if, at any time during the term of this Contract, Contractor learns that Contractor's representations and warranties in Paragraphs A and B of this Article 12 were erroneous on the effective date of this Contract or have become erroneous by reason of new or changed circumstances. If it is later determined that Contractor's representations and warranties in Paragraphs A and B of this Article 12 were erroneous on the effective date of this Contract or have become erroneous by reason of new or changed circumstances, in addition to other remedies available to the City and notwithstanding anything in the Contract to the contrary, the City may immediately terminate the Contract.

D. All terms defined in the Governmental Conduct Act have the same meaning in this section.

14. Amendment

A. This Contract shall not be altered, changed or amended except by instrument in writing executed by the parties hereto and all other required signatories.

B. If the City proposes an amendment to the Contract to unilaterally reduce funding due to budget or other considerations, the Contractor shall, within thirty (30) days of receipt of the proposed Amendment, have the option to terminate the Contract, pursuant to the termination provisions as set forth in Article 4 herein, or to agree to the reduced funding.

15. Change Orders

A. Changes. The Contractor may only make changes or revisions within the Scope of Work as defined by Article 1 and/or Exhibit 1 after receipt of written approval by the City Manager or his/her designee. Such change may only be made to Tasks or Sub-Task as defined in the Scope of Work. Under no circumstance shall such change affect the:

i. Deliverable requirements, as outlined in the Scope of Work;
ii. Due date of any Deliverable, as outlined in the Scope of Work;
iii. Compensation of any Deliverable, as outlined in the Scope of Work;
iv. Contract compensation, as outlined in Article 2; or
v. Contract termination, as outlined in Article 4.

B. Change Request Process. In the event that circumstances warrant a change to accomplish the Scope of Work as described above, a Change Request shall be submitted that meets the following criteria:

i. The Project Manager shall draft a written Change Request for review and approval by the City Manager to include:
   (a) the name of the person requesting the change;
   (b) a summary of the required change;
   (c) the start date for the change;
   (d) the reason and necessity for change;
   (e) the elements to be altered; and
   (f) the impact of the change.

ii. The City Manager shall provide a written decision on the Change Request to the Contractor within a maximum of ten (10) Business Days of receipt of the Change Request. All decisions made by the City Manager are final. Change Requests, once approved, become a part of the Contract, and become binding as a part of the original Contract.

16. Merger

This Contract incorporates all the agreements, covenants, and understandings between the parties hereto concerning the subject matter hereof, and all such covenants, agreements and understandings have been merged into this written contract.

All terms and conditions of **ITB No. 25163** and the Contractor's response to such document(s) are incorporated herein by reference and included in the order of precedence.

No prior Agreement or understanding, oral or otherwise, of the parties or their agents shall be valid or enforceable unless embodied in this Contract.

17. Penalties for Violation of Law

NMSA 1978, Sections 13-1-28 through 13-1-199, imposes civil and criminal penalties for its violation. In addition, the New Mexico criminal statutes impose felony penalties for illegal bribes, gratuities and kickbacks.

18. Equal Opportunity Compliance

The Contractor agrees to abide by all federal and state laws and rules and regulations, and Santa Fe City Code, pertaining to equal employment opportunity. In accordance with all such laws of the State of New Mexico, the Contractor assures that no person in the United States shall, on the grounds of race, religion, color, national origin, ancestry, sex, age, physical or mental handicap, or serious medical condition, spousal affiliation, sexual orientation or gender identity, be excluded from employment with or participation in, be denied the benefits of, or be otherwise subjected to discrimination under any program or activity performed under this Contract. If Contractor is found not to be in compliance with these requirements during the life of this Contract, Contractor agrees to take appropriate steps to correct these deficiencies.

19. Applicable Law

The laws of the State of New Mexico shall govern this Contract, without giving effect to its choice of law provisions. Venue shall be proper only in a New Mexico court of competent jurisdiction in accordance with NMSA 1978, Section 38-3-2. By execution of this Contract, Contractor acknowledges and agrees to the jurisdiction of the courts of the State of New Mexico over any and all lawsuits arising under or out of any term of this Contract.

20. Workers' Compensation

The Contractor agrees to comply with state laws and rules applicable to workers compensation benefits for its employees. If the Contractor fails to comply with the Workers Compensation Act and applicable rules when required to do so, this Contract may be terminated by the City.

21. Other Insurance

If the services contemplated under this Contract will be performed on or in City facilities or property, Contractor shall maintain in force during the entire term of this Contract, the following insurance coverage(s), naming the City as additional insured.

A. **Commercial General Liability** insurance shall be written on an occurrence basis and be a broad as ISO Form CG 00 01 with limits not less than $2,000,000 per occurrence and $2,000,000 in the aggregate for claims against bodily injury, personal and advertising injury, and property damage. Said policy shall include broad form Contractual Liability coverage and be endorsed to name the City of Santa Fe their officials, officers, employees, and agents as additional insureds.

B. **Business Automobile Liability** insurance for all owned, non-owned automobiles, with a combined single limit not less than $1,000,000 per accident.

C. **Broader Coverage and Limits**. The insurance requirements under this Contract shall be the greater of (1) the minimum coverage and limits specified in this Contract, or (2) the broader coverage and maximum limits of coverage of any insurance policy or proceeds available to the Named Insured. It is agreed that these insurance requirements shall not in any way act to reduce coverage that is broader or that includes higher limits than the minimums required herein. No

representation is made that the minimum insurance requirements of this Contract are sufficient to cover the obligations of Contractor hereunder.

D. Contractor shall maintain the above insurance for the term of this Contract and name the City as an additional insured and provide for 30 days cancellation notice on any Certificate of Insurance form furnished by Contractor. Such certificate shall also specifically state the coverage provided under the policy is primary over any other valid and collectible insurance and provide a waiver of subrogation.

22. Records and Financial Audit

The Contractor shall maintain detailed time and expenditure records that indicate the date; time, nature and cost of services rendered during the Contract's term and effect and retain them for a period of three (3) years from the date of final payment under this Contract. The records shall be subject to inspection by the City. The City shall have the right to audit billings both before and after payment. Payment under this Contract shall not foreclose the right of the City to recover excessive or illegal payments

23. Indemnification

The Contractor shall indemnify, hold harmless, or insure the City, including its officers, employees or agents, against liability, claims, damages, losses or expenses, including attorney fees, only to the extent that the liability, damages, losses or costs are caused by, or arise out of, the acts or omissions of the indemnitor or its officers, employees or agents. In the event that any action, suit or proceeding related to the services performed by the Contractor or any officer, agent, employee, servant or subcontractor under this Contract is brought against the Contractor, the Contractor shall, as soon as practicable but no later than two (2) business days after it receives notice thereof, notify the legal counsel of the City.

24. New Mexico Tort Claims Act

Any liability incurred by the City of Santa Fe in connection with this Contract is subject to the immunities and limitations of the New Mexico Tort Claims Act, NMSA 1978, Section 41-4-1, et. seq., as amended. The City and its "public employees" as defined in the New Mexico Tort Claims Act, do not waive sovereign immunity, do not waive any defense and do not waive any limitation of liability pursuant to law. No provision in this Contract modifies or waives any provision of the New Mexico Tort Claims Act.

25. Invalid Term or Condition

If any term or condition of this Contract shall be held invalid or unenforceable, the remainder of this Contract shall not be affected and shall be valid and enforceable.

26. Enforcement of Contract

A party's failure to require strict performance of any provision of this Contract shall not waive or diminish that party's right thereafter to demand strict compliance with that or any other provision. No waiver by a party of any of its rights under this Contract shall be effective unless express and in writing,

and no effective waiver by a party of any of its rights shall be effective to waive any other rights.

27. Notices

Any notice required to be given to either party by this Contract shall be in writing and shall be delivered in person, by courier service or by U.S. mail, either first class or certified, return receipt requested, postage prepaid, as follows:

To the City:	**To the Contractor:**
Chief Procurement Officer purchasing@santafenm.gov PO Box 909 Santa Fe, NM 87504-0909 Caryn Grosse, PMP Project Manager III City of Santa Fe Public Works 2651 Siringo Road, Building E Santa Fe, NM 87505-5229 clgrosse@santafenm.gov (505) 955-5938	B&D Industries Inc. Christopher Giovenco Director – Service 9720 Bell Ave SE Albuquerque NM 87123 cgiovenco@banddindustries.com 505-933-1521

28. Authority

If Contractor is other than a natural person, the individual(s) signing this Contract on behalf of Contractor represents and warrants that he or she has the power and authority to bind Contractor, and that no further action, resolution, or approval from Contractor is necessary to enter into a binding contract.

29. Progress Payments

Based upon Application for Payment submitted to the City by the Contractor and Certificates for Payment issued by the City, the City shall make progress payments on account of the Contract sum to the Contractor as provided in the Contract documents for the period ending the last day of the month as follows:

Not later than twenty-one (21) days following the end of the period covered by the Application for Payment, one hundred percent (100%) of the portion of the Contract Sum properly allocable to labor, materials, and equipment incorporated in the work and one hundred percent (100%) of the portion of the Contract sum properly allocable to materials and equipment suitably stored at the site or some other location agreed upon in writing for the period covered by the Application for Payment, less the aggregate of previous payments made by the City; and upon substantial completion of the entire work, a sum sufficient to increase the total payments to one hundred percent (100%) of the Contract sum, less such amounts as the City shall determine for all incomplete work and unsettled claims as provided in the Contract documents.

30. Final Payment

Final payment, constituting the entire unpaid balance of the Contract sum, unless it is a disputed payment, shall be paid by the City to the Contractor within twenty-one (21) calendar days, after all deficiencies to the Contract document that were noted during the Substantial Completion Inspection and listed on the attachment to the Certificate of Substantial Completion have been corrected, and provided the Contract has been fully performed and a final Certificate for Payment has been issued by the City. In addition, the Contractor shall provide to the City a certified statement of Release of Lien (AIA Document G706A or approved form), Consent of Surety, Warranty from Prime Contractor, Warranties from Suppliers and Manufacturers, training sessions, equipment/operating manuals, and as-built drawings.

31. Schedule

The Contractor shall, within five (5) days after the effective date of Notice to Proceed, prepare and submit a progress schedule covering project operations for the 30-day Contract period. This progress schedule shall be of the type generally referred to as a Critical Path Method (CPM), Critical Path Schedule (CPS), and Critical Path Analysis (CPA), and other similar designations. The CPM shall be used to control the timing and sequences of the project. All work shall be done in accordance with the CPM Planning and Scheduling. A written statement of explanation shall be submitted with the progress schedule. All costs incurred by the contractor to implement the CPM shall be borne by the Contractor and are part of their Contract.

32. General and Special Provisions

A. Terms used in this Contract which are defined in the Conditions of the Contract shall have the meanings designated in those Conditions.

B. An enumeration of the Contractor's General Comprehensive Liability Insurance requirements.

C. Appears in the General Conditions of the Contract for construction. Insurance requirements are also described in the Instructions to the Bidder section of the Project Manual. Contractor shall maintain adequate insurance in at least the maximum amounts, which the City could be liable under the New Mexico Tort Claims Act and shall provide proof of such insurance coverage to the City. It is the sole responsibility of the Contractor to comply with the law.

D. This Contract shall not become effective until: (1) approved by the Governing Body; and (2) signed by all parties required to sign this Contract.

E. The Contractor shall maintain detailed time records which indicate the date, time and nature of services rendered. These records shall be subject to inspection by the City, the Department of Finance and Administration and the State Auditor. The City shall have the right to audit billings both before and after payment. Payment under this Contract shall not foreclose the right of the City to recover excessive illegal payments.

F. The Contractor warrants that the Contractor presently has no interest and shall not acquire any interest, direct or indirect, which would conflict in any manner or degree with the performance or services required under this Contract.

G. The Contractor hereby warrants that the Contractor complies with the Americans with Disabilities Act, 29 CFR 1630.

H. Gender, Singular/Plural. Words of any gender used in this Contract shall be held and construed to include any other gender, and words in the singular number shall be held to include the plural, unless the context otherwise requires.

I. Captions and Section Headings. The captions and section headings contained in this Contract are for convenience of reference only, and in no way limit, define, or enlarge the terms, scope, and conditions of this Contract.

J. Certificates and Documents Incorporated. All certificates and documentation required by the provisions of the Contract shall be attached to this Contract at the time of execution and are hereby incorporated by reference as though set forth in full in this Contract to the extent they are consistent with its conditions and terms.

K. Separability. If any clause or provision of this Contract is illegal, invalid or unenforceable under present or future laws effective during the term of this Contract, then and in that event, it is the intention of the parties hereto that the remainder of this Contract shall not be affected thereby.

L. Words and Phrases. Words, phrases, and abbreviations, which have well-known technical or trade meanings used in the Contract documents shall be used according to such recognized meaning. In the event of a conflict, the more stringent meaning shall govern.

M. Relationship of Contract Documents. The Contract Documents are complementary, and any requirement of one Contract Document shall be as binding as if required by all.

N. Pursuant to NMSA 1978, Section 13-1-191, reference is hereby made to the Criminal Laws of New Mexico (including NMSA 1978, Sections 30-14-1, 30-24-2, and 30-41-1 through 30-41-3) which prohibit bribes, kickbacks, and gratuities, violation of which constitutes a felony. Further, the Procurement Code (NMSA 1978, Sections 13-1-28 through 13-1-199) imposes civil and criminal penalties for its violation.

O. Pursuant to NMSA 1978, Section 13-4-11. Reference is hereby made to the Minimum Wage on Public Works; weekly payments; posting wage scale; withholding funds.

IN WITNESS WHEREOF, the Parties have executed this Contract as of the date of the signature by the required approval authorities below.

CITY OF SANTA FE:

ALAN WEBBER, MAYOR

DATE: _____

CONTRACTOR:
B&D Industries Inc.

Clinton Beall (Nov 25, 2025 14:42:22 MST)

CLINTON BEALL, PRESIDENT

DATE: Nov 25, 2025

NMBTIN: 01-716872-004

ATTEST:

ANDREA SALAZAR, CITY CLERK

Approved to form and legal sufficiency by:

Kevin L. Nault
Kevin L. Nault (Dec 2, 2025 15:42:00 MST)

ASSISTANT CITY ATTORNEY

APPROVED FOR FINANCES:

Emily K. Oster

EMILY OSTER, FINANCE DIRECTOR

Exhibit A

Item	Approx. Qty.	UOM	Article and Description	Unit Price	Comments
			Wage Rates for Projects Under $60,000.00		
1	1	HR - Hour	Superintendent - Regular Hourly Rate	$110.00	
2	1	HR - Hour	Superintendent - Overtime Hourly Rate	$145.00	
3	1	HR - Hour	Journeyman or Experienced Worker - Regular Hourly Rate	$105.00	
4	1	HR - Hour	Journeyman or Experienced Worker - Overtime Hourly Rate	$140.00	
5	1	HR - Hour	Laborer - Regular Hourly Rate	$80.00	
6	1	HR - Hour	Laborer - Overtime Hourly Rate	$105.00	
			Wage Rates for Projects Over $60,000.00		
7	1	HR - Hour	Superintendent - Regular Hourly Rate	$118.80	
8	1	HR - Hour	Superintendent - Overtime Hourly Rate	$156.60	
9	1	HR - Hour	Journeyman or Experienced Worker - Regular Hourly Rate	$113.40	
10	1	HR - Hour	Journeyman or Experienced Worker - Overtime Hourly Rate	$151.20	
11	1	HR - Hour	Laborer - Regular Hourly Rate	$86.40	
12	1	HR - Hour	Laborer - Overtime Hourly Rate	$113.40	
13	1	Daily	Temporary Site Office Trailer, rental rate	$25.00	
14	1	Daily	Temporary Fencing, rental rate	$15.00	Up to 250 linear feet of 6' x 12' panels for a month
15	1	Daily	Sanitary/toilet Facilities, rental rate	$10.00	
16		Percent	Discount off all materials. Enter zero if no discount is offered.	10%	Discount to be applied to MSRP price

On-Call Construction ITB 25163_BandD

Final Audit Report 2025-12-02

Created:	2025-11-25
By:	MATTHEW HARDING (mrharding@santafenm.gov)
Status:	Signed
Transaction ID:	CBJCHBCAABAAI00UhMTLZfvoN8LoB2YgZjIas2FRukcM

"On-Call Construction ITB 25163_BandD" History

Document created by MATTHEW HARDING (mrharding@santafenm.gov)
2025-11-25 - 8:59:06 PM GMT- IP address: 63.232.20.2

Document emailed to Clinton Beall (clinton@banddindustries.com) for signature
2025-11-25 - 8:59:43 PM GMT

Email viewed by Clinton Beall (clinton@banddindustries.com)
2025-11-25 - 9:01:59 PM GMT- IP address: 104.28.48.219

Document e-signed by Clinton Beall (clinton@banddindustries.com)
Signature Date: 2025-11-25 - 9:42:22 PM GMT - Time Source: server- IP address: 174.205.162.143

Document emailed to Kevin Nault (klnault@santafenm.gov) for signature
2025-11-25 - 9:42:24 PM GMT

Email viewed by Kevin Nault (klnault@santafenm.gov)
2025-12-02 - 10:41:33 PM GMT- IP address: 172.59.2.22

Signer Kevin Nault (klnault@santafenm.gov) entered name at signing as Kevin L. Nault
2025-12-02 - 10:41:58 PM GMT- IP address: 172.59.2.22

Document e-signed by Kevin L. Nault (klnault@santafenm.gov)
Signature Date: 2025-12-02 - 10:42:00 PM GMT - Time Source: server- IP address: 172.59.2.22

Agreement completed.
2025-12-02 - 10:42:00 PM GMT

Powered by Adobe Acrobat Sign

ACORD

CERTIFICATE OF LIABILITY INSURANCE

DATE (MM/DD/YYYY) 6/3/2025

THIS CERTIFICATE IS ISSUED AS A MATTER OF INFORMATION ONLY AND CONFERS NO RIGHTS UPON THE CERTIFICATE HOLDER. THIS CERTIFICATE DOES NOT AFFIRMATIVELY OR NEGATIVELY AMEND, EXTEND OR ALTER THE COVERAGE AFFORDED BY THE POLICIES BELOW. THIS CERTIFICATE OF INSURANCE DOES NOT CONSTITUTE A CONTRACT BETWEEN THE ISSUING INSURER(S), AUTHORIZED REPRESENTATIVE OR PRODUCER, AND THE CERTIFICATE HOLDER.

IMPORTANT: If the certificate holder is an ADDITIONAL INSURED, the policy(ies) must have ADDITIONAL INSURED provisions or be endorsed. If SUBROGATION IS WAIVED, subject to the terms and conditions of the policy, certain policies may require an endorsement. A statement on this certificate does not confer rights to the certificate holder in lieu of such endorsement(s).

PRODUCER License # 0757776 HUB International Insurance Services (SOW) 6565 Americas Parkway Suite 720 Albuquerque, NM 87110	CONTACT NAME: Carrie Butler PHONE (A/C, No, Ext): (505) 262-9412 9412 FAX (A/C, No): (866) 487-3972 E-MAIL ADDRESS: Carrie.Butler@hubinternational.com
INSURED B & D Industries, Inc. 9720 Bell Ave SE Albuquerque, NM 87123	INSURER A : Valley Forge Insurance Company 20508 INSURER B : National Fire Insurance Company of Hartford 20478 INSURER C : The Continental Insurance Company 35289 INSURER D : Builders Trust of New Mexico INSURER E : INSURER F :

COVERAGES **CERTIFICATE NUMBER:** **REVISION NUMBER:**

THIS IS TO CERTIFY THAT THE POLICIES OF INSURANCE LISTED BELOW HAVE BEEN ISSUED TO THE INSURED NAMED ABOVE FOR THE POLICY PERIOD INDICATED. NOTWITHSTANDING ANY REQUIREMENT, TERM OR CONDITION OF ANY CONTRACT OR OTHER DOCUMENT WITH RESPECT TO WHICH THIS CERTIFICATE MAY BE ISSUED OR MAY PERTAIN, THE INSURANCE AFFORDED BY THE POLICIES DESCRIBED HEREIN IS SUBJECT TO ALL THE TERMS, EXCLUSIONS AND CONDITIONS OF SUCH POLICIES. LIMITS SHOWN MAY HAVE BEEN REDUCED BY PAID CLAIMS.

INSR LTR	TYPE OF INSURANCE	ADDL INSD	SUBR WVD	POLICY NUMBER	POLICY EFF (MM/DD/YYYY)	POLICY EXP (MM/DD/YYYY)	LIMITS	
A	X COMMERCIAL GENERAL LIABILITY CLAIMS-MADE X OCCUR GEN'L AGGREGATE LIMIT APPLIES PER: POLICY X PRO-JECT LOC OTHER:	X	X	6016149399	12/31/2024	12/31/2025	EACH OCCURRENCE DAMAGE TO RENTED PREMISES (Ea occurrence) MED EXP (Any one person) PERSONAL & ADV INJURY GENERAL AGGREGATE PRODUCTS - COMP/OP AGG	$ 1,000,000 $ 1,000,000 $ 15,000 $ 1,000,000 $ 2,000,000 $ 2,000,000
B	AUTOMOBILE LIABILITY X ANY AUTO OWNED AUTOS ONLY SCHEDULED AUTOS HIRED AUTOS ONLY NON-OWNED AUTOS ONLY	X	X	6016149371	12/31/2024	12/31/2025	COMBINED SINGLE LIMIT (Ea accident) BODILY INJURY (Per person) BODILY INJURY (Per accident) PROPERTY DAMAGE (Per accident)	$ 1,000,000 $ $ $
C	X UMBRELLA LIAB X OCCUR EXCESS LIAB CLAIMS-MADE DED X RETENTION $ 10,000	X	X	6016149404	12/31/2024	12/31/2025	EACH OCCURRENCE AGGREGATE Aggregate	$ 5,000,000 $ $ 5,000,000
D	WORKERS COMPENSATION AND EMPLOYERS' LIABILITY ANY PROPRIETOR/PARTNER/EXECUTIVE OFFICER/MEMBER EXCLUDED? (Mandatory in NH) Y / N: N If yes, describe under DESCRIPTION OF OPERATIONS below	N / A	X	WC100-0005672-2025A	1/1/2025	1/1/2026	X PER STATUTE OTH-ER E.L. EACH ACCIDENT E.L. DISEASE - EA EMPLOYEE E.L. DISEASE - POLICY LIMIT	$ 2,000,000 $ 2,000,000 $ 2,000,000

DESCRIPTION OF OPERATIONS / LOCATIONS / VEHICLES (ACORD 101, Additional Remarks Schedule, may be attached if more space is required)
Umbrella is Form Following over General Liability, Auto Liability and Employers Liability. Additional Insured, Waiver of Subrogation and Primary Non-Contributory apply per attached policy forms.

CERTIFICATE HOLDER

City of Santa Fe
200 Lincoln Ave
Santa Fe, NM 87501

CANCELLATION

SHOULD ANY OF THE ABOVE DESCRIBED POLICIES BE CANCELLED BEFORE THE EXPIRATION DATE THEREOF, NOTICE WILL BE DELIVERED IN ACCORDANCE WITH THE POLICY PROVISIONS.

AUTHORIZED REPRESENTATIVE



© 1988-2015 ACORD CORPORATION. All rights reserved.
The ACORD name and logo are registered marks of ACORD

From: DUTTON-LEYDA, TRAVIS K.
To: KAHAHANE, ELIZABETH L.
Cc: Purchasing DET
Subject: Re: Determination Request – Miscellaneous General Contracting work for the City of Santa Fe
Date: Wednesday, August 20, 2025 9:05:00 AM
Attachments: image001.png

Hi, this is construction.

Thank you.

Regards,

Travis Dutton-Leyda
Chief Procurement Officer
City of Santa Fe
200 Lincoln Avenue
Santa Fe, NM 87501
505-629-8351
tkduttonleyda@santafenm.gov

https://santafenm.gov/finance-2/purchasing-1

CITY OF SANTA FE | FACILITIES

Vision without action is merely a dream.
Action without vision passes the time.
Vision with action can change the world. ~ Joel A. Barker

> On Aug 20, 2025, at 8:56 AM, KAHAHANE, ELIZABETH L. <elkahahane@santafenm.gov> wrote:
>
> Aloha Purchasing!
>
> Facilities Division is requesting a SOW determination for the following:
>
> > The Contractor shall perform the following work in accordance with their Bid Pricing, attached hereto and made a part thereof, as Exhibit A:
> > 1. This work shall include Miscellaneous General Contracting work for the City

of Santa Fe.

2. The Contractor shall be required to provide On-Call General Contracting Services for any number of the activities listed under this Scope of Work upon the request of the City. Once a need is identified, the City will issue a written Task Order to the Contractor detailing the services required. Upon receiving the City's request for services, the Contractor shall promptly provide the City with an estimate (based upon the rates submitted in the Bid Form), cost summary, and project schedule required to complete the assignment or task. Project schedules, negotiated price, and completion dates shall be determined on a project-by-project basis and dependent upon the urgency of that task. The Contractor may be required to do some of the work in phases. The Contractor shall be required to provide the requested labor and all equipment and materials within one week of a request issuance of a Notice to Proceed unless otherwise arranged. The Contractor shall agree to provide required labor within 24 hours for emergency situations whenever possible.

3. The City of Santa Fe Public Works Facilities Division shall be able to utilize this On-Call Contract as needed and as funding is available. All other City of Santa Fe staff will only be authorized to utilize this On-Call Contract with prior, written approval of the scope of work, from the Facilities Division Director, before commencing any work applicable to this On-Call Contract.

4. Contractor is responsible for all required permits and licenses required to perform this work. Contractor shall be responsible for adherence to the Contract Documents, Construction Documents, Specifications, and approved directives.

5. Contractor shall be responsible for any applicable Local, County, State and Federal requirements and permits.

6. Contractor shall be responsible for verifications of all existing conditions, measurements, and dimensions for bidding. Contractor shall be responsible for all permits, fees, and State and/or City inspections associated with their work.

Please let me know if additional information is required.
Thank you!

Best,
Elizabeth "Lisa" Kahahane, CPO
Contract Administrator | Facilities Division | Public Works Dept.
Email: elkahahane@santafenm.gov
M: (505) 795-2439
O: (505) 955-5934

CITY OF SANTA FE
FACILITIES

This e-mail and any attachments may contain confidential information and/or

information protected by intellectual property rights for the exclusive attention of the intended addressees. If you have received this transmission in error, please immediately notify the sender by return e-mail and delete this message and its attachments. Unauthorized use, copying or further full or partial distribution of this e-mail or its contents is prohibited.

Services Offered to the City of Santa Fe (FY26)

Approved:
These services have been approved by the New Mexico Council for Purchasing from Persons with Disabilities and are available through Horizons of New Mexico.

- ADA Accessibility Consulting Services
- Auctioneering Services
- Bulk Mailing and Sorting
- Call Center Services
- Computer Refurbishing
- Courier Services
- Decontamination, Sanitation and Sterilization Services
- Debris Removal
- Document Imaging
- Document Shredding
- Envelope Stuffing
- General Labor
- Hard Drive Destruction
- Janitorial and Housekeeping Services – Including Carpet Cleaning & Floor Care
- Landscape Irrigation
- Landscaping
- Mailing Services
- Management of an Assistive Technology Reuse and Recycling Program
- Medical Waste Disposal
- Meeting Minute Preparation Services
- Pest Control and Extermination Services
- Printing Services
- Rest Area Maintenance
- Screen Printing
- Snow Removal
- Temporary Staffing Services
- Yard, Grounds, and Lawn Maintenance

Permissive:
The services have been approved by the New Mexico Council for Purchasing from Persons with Disabilities as permissible for sale under the State Use Act through Horizons of New Mexico. While the Council recognizes that certain Horizons of New Mexico members are capable of performing the services listed below, said services are considered permissive and excluded from the mandatory aspect of the State Use Program. Any procurement of the below services through Horizons of New Mexico is at the discretion of the purchasing agent and will be considered by the Council on a case-by-case basis.

- Graphic Design
- Graphic Design - Logo Design
- IT – Enterprise Application
- IT – IV & V
- IT Network and Database Management
- IT Support
- IT Security Services
- IT – Web Design
- IT – Web Programmer
- Marketing
- Social Media Marketing

For the complete State Use service list, please go to: http://horizonsofnewmexico.org/services.html

GB Packet_BandD_On-Call GC ITB 25163

Final Audit Report 2025-12-08

Created:	2025-12-05
By:	Elizabeth Kahahane (elkahahane@santafenm.gov)
Status:	Signed
Transaction ID:	CBJCHBCAABAAPwqgJ-UShNsKbJh-bilk1sDoZBrzwCOi

"GB Packet_BandD_On-Call GC ITB 25163" History

Document created by Elizabeth Kahahane (elkahahane@santafenm.gov)
2025-12-05 - 5:19:28 PM GMT- IP address: 63.232.20.2

Document emailed to CARYN GROSSE (clgrosse@santafenm.gov) for signature
2025-12-05 - 5:56:49 PM GMT

Email viewed by CARYN GROSSE (clgrosse@santafenm.gov)
2025-12-05 - 5:59:48 PM GMT- IP address: 104.47.64.254

Document e-signed by CARYN GROSSE (clgrosse@santafenm.gov)
Signature Date: 2025-12-05 - 6:00:16 PM GMT - Time Source: server- IP address: 63.232.20.2

Document emailed to Timothy Farrell (tgfarrell@santafenm.gov) for signature
2025-12-05 - 6:00:18 PM GMT

Email viewed by Timothy Farrell (tgfarrell@santafenm.gov)
2025-12-05 - 6:46:24 PM GMT- IP address: 104.47.65.254

Document e-signed by Timothy Farrell (tgfarrell@santafenm.gov)
Signature Date: 2025-12-05 - 6:46:40 PM GMT - Time Source: server- IP address: 174.56.2.34

Document emailed to JOHN BURNETT (jsburnett@santafenm.gov) for signature
2025-12-05 - 6:46:42 PM GMT

Email viewed by JOHN BURNETT (jsburnett@santafenm.gov)
2025-12-08 - 2:52:07 PM GMT- IP address: 71.228.98.124

Document e-signed by JOHN BURNETT (jsburnett@santafenm.gov)
Signature Date: 2025-12-08 - 2:52:37 PM GMT - Time Source: server- IP address: 71.228.98.124

Agreement completed.
2025-12-08 - 2:52:37 PM GMT

Powered by Adobe Acrobat Sign

GB_Packet_BandD_On-Call_GC_ITB_25163_v3.0 e

Final Audit Report 2025-12-24

Created:	2025-12-19
By:	RACHEL GABALDON (rdgabaldon@santafenm.gov)
Status:	Signed
Transaction ID:	CBJCHBCAABAATNhwyhWaitJXmKx-p7bRpVaq0X6leGhW

"GB_Packet_BandD_On-Call_GC_ITB_25163_v3.0 e" History

Document created by RACHEL GABALDON (rdgabaldon@santafenm.gov)
2025-12-19 - 4:59:55 PM GMT- IP address: 63.232.20.2

Document emailed to ajhopkins@santafenm.gov ajhopkins@santafenm.gov (ajhopkins@santafenm.gov) for signature
2025-12-19 - 5:02:41 PM GMT

Email viewed by ajhopkins@santafenm.gov ajhopkins@santafenm.gov (ajhopkins@santafenm.gov)
2025-12-19 - 6:10:26 PM GMT- IP address: 104.47.64.254

Document e-signed by ajhopkins@santafenm.gov ajhopkins@santafenm.gov (ajhopkins@santafenm.gov)
Signature Date: 2025-12-19 - 6:10:49 PM GMT - Time Source: server- IP address: 63.232.20.2

Document sent to JoAnn Lovato (jdlovato@santafenm.gov) and Travis Dutton-Leyda (tkduttonleyda@santafenm.gov) for signature. One of them to sign
2025-12-19 - 6:10:52 PM GMT

Email viewed by Travis Dutton-Leyda (tkduttonleyda@santafenm.gov)
2025-12-19 - 6:24:57 PM GMT- IP address: 63.232.20.2

Email viewed by Travis Dutton-Leyda (tkduttonleyda@santafenm.gov)
2025-12-22 - 5:20:50 AM GMT- IP address: 146.75.203.1

Email viewed by JoAnn Lovato (jdlovato@santafenm.gov)
2025-12-23 - 10:59:46 PM GMT- IP address: 63.232.20.2

Document e-signed by JoAnn Lovato (jdlovato@santafenm.gov)
Signature Date: 2025-12-23 - 11:00:34 PM GMT - Time Source: server- IP address: 63.232.20.2

Document emailed to EMILY OSTER (ekoster@santafenm.gov) for signature
2025-12-23 - 11:00:37 PM GMT

Powered by Adobe Acrobat Sign

Email viewed by EMILY OSTER (ekoster@santafenm.gov)

2025-12-24 - 4:34:41 PM GMT- IP address: 174.218.241.65

Document e-signed by EMILY OSTER (ekoster@santafenm.gov)

Signature Date: 2025-12-24 - 4:44:36 PM GMT - Time Source: server- IP address: 174.218.241.65

Agreement completed.

2025-12-24 - 4:44:36 PM GMT

CITY OF SANTA FE

Date: December 3, 2025

To: Governing Body

From: Caryn Grosse, PMP, Public Works Project Manager III

Via: Sam Burnett, Interim Public Works Department Director JOHN BURNETT (Dec 8, 2025 07:53:17 MST)
Tim Farrell, Interim Facilities Division Director Timothy Farrell

Subject: On-Call Price Agreement for City-Wide Miscellaneous Construction Services

Vendor Name: AnchorBuilt Inc.

Vendor Number: 9672

ACTION:
Request for Approval of an On-Call Price Agreement with AnchorBuilt Inc. in the Total Amount of $10,000,000 Including NMGRT for City-Wide Miscellaneous Construction Services for a Term of 10 Years. (Caryn Grosse, Public Works Project Manager III, clgrosse@santafenm.gov)

CONTRACT NUMBER:
The FY26 Munis Contract Number is 3260203.

BACKGROUND AND SUMMARY:
The Public Works Department Facilities Division uses on-call services to augment the skills, licensure, and capacity of staff to address facility issues and emergencies in a timely, safe, and compliant manner. The Facilities Division typically maintains on-call contracts for general contracting, mechanical, electrical, plumbing, roofing, remediation, and landscaping services.

In accordance with the Invitation to Bid (ITB No. 25163) for On-Call City-Wide Miscellaneous Construction Services, multiple responsive vendors were selected for contracts based on lowest bidder and performance criteria: AnchorBuilt Inc., B&D Industries Inc., Davenport Construction Management LLC, Enviroworks LLC, JDR & Associates, LLR Construction LLC, and Unified Contractor, Inc. AnchorBuilt has provided services throughout the City and has proven to be cost-effective, reliable, and capable of consistently providing high quality results.

On-call contracts are not a guarantee of payment. These contracts are only used, and purchase orders issued, as needs arise and funding is available. The $10,000,000 (including 8.1875% NMGRT) maximum for this contract is based on the historical and anticipated needs across the City over the next ten years.

ATTACHMENTS:
On-Call Price Agreement for Construction Services
Proposal – Exhibit A
Certificate of Insurance
CPO Determination
Horizons Service List

PROCUREMENT METHOD:
The procurement method for this contract is the Invitation to Bid No. 25163, dated April 24, 2025.

Chief Procurement Officer (CPO)/Designee: JoAnn Lovato Montaño Date: 12/23/2025
CPO Comment/Exceptions: _____

FUNDING SOURCE:
Funding will be provided on a project-by-project basis.
Fund Name/Number: Various
Munis Org Name/Number: Various
Munis Object Name/Number: Various

Budget Officer/Designee: Andy Hopkins Date: 12/19/2025
Budget Officer Comment/Exceptions: _____

ASSOCIATED APPROVALS:
IT Components included? ☐ Yes | ☒ No
Approval: _____ Title: _____ Date: _____
Comment/Exceptions: _____

Treasury/Point of Sale Components included? ☐ Yes | ☒ No
Approval: _____ Title: _____ Date: _____
Comment/Exceptions: _____

Vehicles included? ☐ Yes | ☒ No
Approval: _____ Title: _____ Date: _____
Comment/Exceptions: _____

Construction to City Facilities, Furniture, and/or Fixtures, included? ☒ Yes | ☐ No
Approval: _____ Title: _____ Date: _____
Comment/Exceptions: Timothy Farrell

Is this an externally funded purchase? ☐ Yes | ☒ No
If yes, what is the issuing agency: _____
Approval: _____ Title: _____ Date: _____
Comment/Exceptions: _____

Capital Asset or Project? ☐ Yes | ☒ No
Project Ledger Number _____
Approval: _____ Title: _____ Date: _____
Comment/Exceptions: _____

Item #: _____
Munis Contract #: 3260203
ITB No.: 25163

CITY OF SANTA FE

ON-CALL PRICE AGREEMENT

CONSTRUCTION CONTRACT

City-Wide Miscellaneous Construction Services

THIS CONTRACT is made and entered into by and between the City of Santa Fe, New Mexico, hereinafter referred to as the "City," and **AnchorBuilt, Inc.**, hereinafter referred to as the "Contractor," and is effective as of the date set forth below upon which it is executed by the Parties.

RECITALS

WHEREAS, the City, through its Governing Body, is authorized to enter into an On-Call Price Agreement for the project; and

WHEREAS, the City has procured this Contract according to the established State and Local Purchasing procedures for contracts of the type and amount; and

The City and the Contractor hereby agree as follows:

1. Scope of Work

A. The Contractor shall perform the following work in accordance with their Bid Pricing, attached hereto and made a part thereof, as Exhibit A:

1. This work shall include Miscellaneous General Contracting work for the City of Santa Fe.
2. The Contractor shall be required to provide On-Call Miscellaneous Construction Services for any number of the activities listed under this Scope of Work upon the request of the City. Once a need is identified, the City's Engineers, Project Managers, and Project Administrators (collectively "Project Manager") may issue Task Orders for items described herein. The terms and conditions shall be incorporated in each Task Order issued hereunder. Once a need is identified, the Project Manager will issue a written Task Order to the Contractor detailing the services required. Upon receiving the Task Order, the Contractor shall promptly provide the Project Manager with an estimate, based upon the rates included in their ITB, a cost summary, and a proposed schedule required to complete the assignment or task. Project schedules, negotiated price, and completion dates shall be determined on project-by-project basis and dependent upon the urgency of that task. The Contractor may be required to do some of the work in phases. The City's Project Manager

may issue a Notice to Proceed by signing the Notice after the task price and schedule are finalized by the Contractor, subject to the exception in Article 1(A)(3) below. The Contractor shall be required to provide the requested labor and all equipment and materials within one week of a request issuance of a Notice to Proceed unless otherwise arranged. The Contractor shall agree to provide required labor within 24 hours for emergency situations whenever possible. The Contractor shall not perform any work without a Notice to Proceed signed by the Project Manager, and the City shall not pay for any work performed without a signed Notice to Proceed.

3. If a Task Order does not specify which City division is issuing the Task Order, Contractor shall enquire before acting on a Notice to Proceed. For any City division other than the Public Works Facilities Division the Notice to Proceed is effective only if written approval of the scope of work from the Facilities Division Director is attached.

4. Contractor is responsible for all required permits, licenses, and inspections required to perform this work, and shall comply with applicable municipal, county, state, and federal requirements. Contractor shall be responsible for verification of all existing conditions, measurements, dimensions, adherence to the Contract Documents, Construction Documents, Specifications, and approved directives.

B. Distribution:

City:	Contractor:
Caryn Grosse, PMP Project Manager III City of Santa Fe Facilities Division 2651 Siringo Road, Building E Santa Fe, NM 87505-5229	Ray Zamora President AnchorBuilt, Inc. PO Box 27688 Albuquerque, NM 87125

C. Price Adjustments:

The awarded vendor shall maintain fixed pricing for each year of this contract, defined as twelve (12) months starting on and including the Effective Date. Pricing may be adjusted no more than once annually to commercially reasonable rates through an amendment to the price list attached as Exhibit A signed by Contractor and the City's Director of Public Works. Amendments to Exhibit A do not alter Contractor's maximum total compensation pursuant to Article 2 (Compensation) below. The Contractor must submit all pricing increase requests in writing to the City of Santa Fe designated department contact, providing evidence that the request is based on demonstrable market changes impacting the cost of products and services. The request must itemize all proposed changes by line item and include supporting documentation deemed acceptable by the City of Santa Fe (such as a letter from a manufacturer indicating price increases, etc.). The City's decision on acceptable documentation in this context shall be final and binding upon all parties to the contract. No price increase shall result in a higher profit margin. Pricing changes will apply to orders entered on or after the effective date of the price change. Price increases will not be retroactive to purchase orders already issued. Orders will be filled at the price indicated in the purchase order issued by the City.

To facilitate prompt consideration, all requests for price increases must include the following information:

i. Contract Item Number

ii. Current Item Price
iii. Proposed New Price
iv. Percentage of Increase
v. Mill/Supplier Notification of price increase indicating percentage of increase and including the reason for the increase.

2. ITB Compensation

A. Payment. The City shall compensate the Contractor based on Task Orders and the itemized amounts specified in Exhibit A. For the services described in the scope of work, the City will pay the Contractor up to, but not to exceed, $10,000,000.00. The applicable gross receipts tax (8.1875%) shall be shown as a separate amount on each billing or request for payment made under the contract, consistent with NMSA 1978, Section 13-1-108.

B. The compensation represents a maximum amount. The Contractor must notify the City when the Services provided under this Contract approach 90% of compensation total. Services rendered beyond the maximum compensation amount will not be reimbursed unless the Contract is amended in writing prior to the provision of such services.

C. Invoicing and Payment Terms Payment will be made upon the City's acceptance of deliverables and receipt of a detailed, certified invoice from the Contractor. Payments will be sent to the Contractor's designated address. The City shall issue payment in accordance with the timelines required by law. Invoices must be submitted no later than fifteen (15) days after the Contract's termination. Late invoices will not be processed or paid.

D. Extended Payment Terms for Grant-Funded Contracts. For grant-funded agreements, the City may issue payment within forty-five (45) days following submission of an undisputed payment request.

3. Term

THIS CONTRACT SHALL NOT BECOME EFFECTIVE UNTIL APPROVED BY THE CITY. This Contract shall terminate ten (10) years from date of final signature unless terminated pursuant to Paragraph 4 (Termination) or Paragraph 5 (Appropriations). A contract for construction services may not exceed ten (10) years, including all extensions and renewals, except as otherwise provided by NMSA 1978, Section 13-1-150 through 13-1-152 or SFCC 1987, Section 11-13.

4. Termination

A. Grounds. The City may terminate this Contract for convenience or cause. For contracts within their authority, the City Manager or their designee is authorized to provide the notice of termination, otherwise such notice of termination shall be provided by the Mayor or their designee as authorized by the Governing Body. The Contractor may only terminate this Contract based upon the City's uncured, material breach of this Contract.

B. Except as otherwise provided in Paragraphs 7.A and 17, the City shall give Contractor

written notice of termination at least thirty (30) days prior to the intended date of termination.

ii. Contractor shall give City written notice of termination at least thirty (30) days prior to the intended date of termination, which notice shall (i) identify all the City's material breaches of this Contract upon which the termination is based and (ii) state what the City must do to cure such material breaches. Contractor's notice of termination shall only be effective (i) if the City does not cure all material breaches within the thirty (30) day notice period or (ii) in the case of material breaches that cannot be cured within thirty (30) days, the City does not, within the thirty (30) day notice period, notify the Contractor of its intent to cure and begin with due diligence to cure the material breach.

iii. Notwithstanding the foregoing, this Contract may be terminated immediately upon written notice to the Contractor (i) if the Contractor becomes unable to perform the services contracted for, as determined by the City; (ii) if, during the term of this Contract, the Contractor is suspended or debarred by the City; or (iii) the Contract is terminated pursuant to Paragraph 5, "Appropriations," of this Contract.

B. Liability. Except as otherwise expressly allowed or provided under this Contract, the City's sole liability upon termination shall be to pay for acceptable work performed prior to the Contractor's receipt or issuance of a notice of termination; provided, however, that a notice of termination shall not nullify or otherwise affect either party's liability for pre-termination defaults under or breaches of this Contract. The Contractor shall submit an invoice for such work within thirty (30) days of receiving or sending the notice of termination. *THIS PROVISION IS NOT EXCLUSIVE AND DOES NOT WAIVE THE CITY'S OTHER LEGAL RIGHTS AND REMEDIES CAUSED BY THE CONTRACTOR'S DEFAULT/BREACH OF THIS CONTRACT.*

5. Appropriations

The terms of this Contract are contingent upon sufficient appropriations and authorization being made by the Governing Body for the performance of this Contract. If sufficient appropriations and authorization are not made by the Governing Body, this Contract shall terminate immediately upon written notice being given by the City to the Contractor. The City's decision as to whether sufficient appropriations are available shall be accepted by the Contractor and shall be final. If the City proposes an amendment to the Contract to unilaterally reduce funding, the Contractor shall have the option to terminate the Contract or to agree to the reduced funding, within thirty (30) days of receipt of the proposed amendment.

6. Status of Contractor

The Contractor and its agents and employees are independent contractors performing construction services for the City and are not employees of the City. The Contractor and its agents and employees shall not accrue leave, retirement, insurance, bonding, use of City vehicles, or any other benefits afforded to employees of the City as a result of this Contract. The Contractor acknowledges that all sums received hereunder are reportable by the Contractor for tax purposes, including without limitation, self-employment and business income tax. The Contractor agrees not to purport to bind the City unless the Contractor has express written authority to do so, and then only within the strict limits of that authority.

7. On-Call Price Agreement Performance and Payment Bond

A. When a Task Order is issued in excess of twenty-five thousand dollars ($25,000), the following bonds or security shall be delivered to the City and shall become binding on the parties upon the execution of the contract. If the Contractor fails to deliver the required performance and payment bonds, the Contractor's bid shall be rejected, its bid security shall be enforced to the extent of actual damages. Award of the Task Order via Notice to Proceed shall be made pursuant to the Procurement Code in the following manner:

i. a performance bond satisfactory to the City, executed by a surety company authorized to do business in this state and said surety to be approved in federal circular 570 as published by the United States treasury department or the state board of finance or the local governing authority, in an amount equal to one hundred percent of the price specified in the contract; and

ii. a payment bond satisfactory to the City, executed by a surety company authorized to do business in this state and said surety to be approved in federal circular 570 as published by the United States treasury department or the state board of finance or the local governing authority, in an amount equal to one hundred percent of the price specified in the contract, for the protection of all persons supplying labor and material to the contractor or its subcontractors for the performance of the work provided for in the contract.

B. A subcontractor shall provide a performance and payment bond on a public works building project if the subcontractor's contract for work to be performed on a project is one hundred twenty-five thousand dollars ($125,000) or more.

8. Assignment

The Contractor shall not assign or transfer any interest in this Contract or assign any claims for money due or to become due under this Contract without the prior written approval of the City.

9. Subcontracting

The Contractor shall not subcontract any portion of the services to be performed under this Contract without the prior written approval of the City. No such subcontract shall relieve the primary Contractor from its obligations and liabilities under this Contract, nor shall any subcontract obligate direct payment from the City.

10. Release

Final payment of the amounts due under this Contract shall operate as a release of the City, its officers and employees from all liabilities, claims and obligations whatsoever arising from or under this Contract.

11. Confidentiality

Any confidential information provided to or developed by the Contractor in the performance of this Contract shall be kept confidential and shall not be made available to any individual or organization by the Contractor without the prior written approval of the City.

12. Product of Service – Copyright

All materials developed or acquired by the Contractor under this Contract shall become the property of the City and shall be delivered to the City no later than the termination date of this Contract. Nothing developed or produced, in whole or in part, by the Contractor under this Contract shall be the subject of an application for copyright or other claim of ownership by or on behalf of the Contractor.

13. Conflict of Interest; Governmental Conduct Act

A. The Contractor represents and warrants that it presently has no interest and, during the term of this Contract, shall not acquire any interest, direct or indirect, which would conflict in any manner or degree with the performance or services required under the Contract.

B. The Contractor further represents and warrants that it has complied with, and, during the term of this Contract, will continue to comply with, and that this Contract complies with all applicable provisions of the Governmental Conduct Act, NMSA 1978, Chapter 10, Article 16.

C. Contractor's representations and warranties in Paragraphs A and B of this Article 12 are material representations of fact upon which the City relied when this Contract was entered into by the parties. Contractor shall provide immediate written notice to the City if, at any time during the term of this Contract, Contractor learns that Contractor's representations and warranties in Paragraphs A and B of this Article 12 were erroneous on the effective date of this Contract or have become erroneous by reason of new or changed circumstances. If it is later determined that Contractor's representations and warranties in Paragraphs A and B of this Article 12 were erroneous on the effective date of this Contract or have become erroneous by reason of new or changed circumstances, in addition to other remedies available to the City and notwithstanding anything in the Contract to the contrary, the City may immediately terminate the Contract.

D. All terms defined in the Governmental Conduct Act have the same meaning in this section.

14. Amendment

A. This Contract shall not be altered, changed or amended except by instrument in writing executed by the parties hereto and all other required signatories.

B. If the City proposes an amendment to the Contract to unilaterally reduce funding due to budget or other considerations, the Contractor shall, within thirty (30) days of receipt of the proposed Amendment, have the option to terminate the Contract, pursuant to the termination provisions as set forth in Article 4 herein, or to agree to the reduced funding.

15. Change Orders

A. Changes. The Contractor may only make changes or revisions within the Scope of Work as defined by Article 1 and/or Exhibit 1 after receipt of written approval by the City Manager or his/her designee. Such change may only be made to Tasks or Sub-Task as defined in the Scope of Work. Under no circumstance shall such change affect the:

i. Deliverable requirements, as outlined in the Scope of Work;
ii. Due date of any Deliverable, as outlined in the Scope of Work;
iii. Compensation of any Deliverable, as outlined in the Scope of Work;
iv. Contract compensation, as outlined in Article 2; or
v. Contract termination, as outlined in Article 4.

B. Change Request Process. In the event that circumstances warrant a change to accomplish the Scope of Work as described above, a Change Request shall be submitted that meets the following criteria:

i. The Project Manager shall draft a written Change Request for review and approval by the City Manager to include:
   (a) the name of the person requesting the change;
   (b) a summary of the required change;
   (c) the start date for the change;
   (d) the reason and necessity for change;
   (e) the elements to be altered; and
   (f) the impact of the change.

ii. The City Manager shall provide a written decision on the Change Request to the Contractor within a maximum of ten (10) Business Days of receipt of the Change Request. All decisions made by the City Manager are final. Change Requests, once approved, become a part of the Contract, and become binding as a part of the original Contract.

16. Merger

This Contract incorporates all the agreements, covenants, and understandings between the parties hereto concerning the subject matter hereof, and all such covenants, agreements and understandings have been merged into this written contract.

All terms and conditions of **ITB No. 25163** and the Contractor's response to such document(s) are incorporated herein by reference and included in the order of precedence.

No prior Agreement or understanding, oral or otherwise, of the parties or their agents shall be valid or enforceable unless embodied in this Contract.

17. Penalties for Violation of Law

NMSA 1978, Sections 13-1-28 through 13-1-199, imposes civil and criminal penalties for its violation. In addition, the New Mexico criminal statutes impose felony penalties for illegal bribes, gratuities and kickbacks.

18. Equal Opportunity Compliance

The Contractor agrees to abide by all federal and state laws and rules and regulations, and Santa Fe City Code, pertaining to equal employment opportunity. In accordance with all such laws of the State of New Mexico, the Contractor assures that no person in the United States shall, on the grounds of race, religion, color, national origin, ancestry, sex, age, physical or mental handicap, or serious medical condition, spousal affiliation, sexual orientation or gender identity, be excluded from employment with or participation in, be denied the benefits of, or be otherwise subjected to discrimination under any program or activity performed under this Contract. If Contractor is found not to be in compliance with these requirements during the life of this Contract, Contractor agrees to take appropriate steps to correct these deficiencies.

19. Applicable Law

The laws of the State of New Mexico shall govern this Contract, without giving effect to its choice of law provisions. Venue shall be proper only in a New Mexico court of competent jurisdiction in accordance with NMSA 1978, Section 38-3-2. By execution of this Contract, Contractor acknowledges and agrees to the jurisdiction of the courts of the State of New Mexico over any and all lawsuits arising under or out of any term of this Contract.

20. Workers' Compensation

The Contractor agrees to comply with state laws and rules applicable to workers compensation benefits for its employees. If the Contractor fails to comply with the Workers Compensation Act and applicable rules when required to do so, this Contract may be terminated by the City.

21. Other Insurance

If the services contemplated under this Contract will be performed on or in City facilities or property, Contractor shall maintain in force during the entire term of this Contract, the following insurance coverage(s), naming the City as additional insured.

A. **Commercial General Liability** insurance shall be written on an occurrence basis and be a broad as ISO Form CG 00 01 with limits not less than $2,000,000 per occurrence and $2,000,000 in the aggregate for claims against bodily injury, personal and advertising injury, and property damage. Said policy shall include broad form Contractual Liability coverage and be endorsed to name the City of Santa Fe their officials, officers, employees, and agents as additional insureds.

B. **Business Automobile Liability** insurance for all owned, non-owned automobiles, with a combined single limit not less than $1,000,000 per accident.

C. **Broader Coverage and Limits**. The insurance requirements under this Contract shall be the greater of (1) the minimum coverage and limits specified in this Contract, or (2) the broader coverage and maximum limits of coverage of any insurance policy or proceeds available to the Named Insured. It is agreed that these insurance requirements shall not in any way act to reduce coverage that is broader or that includes higher limits than the minimums required herein. No

representation is made that the minimum insurance requirements of this Contract are sufficient to cover the obligations of Contractor hereunder.

D. Contractor shall maintain the above insurance for the term of this Contract and name the City as an additional insured and provide for 30 days cancellation notice on any Certificate of Insurance form furnished by Contractor. Such certificate shall also specifically state the coverage provided under the policy is primary over any other valid and collectible insurance and provide a waiver of subrogation.

22. Records and Financial Audit

The Contractor shall maintain detailed time and expenditure records that indicate the date; time, nature and cost of services rendered during the Contract's term and effect and retain them for a period of three (3) years from the date of final payment under this Contract. The records shall be subject to inspection by the City. The City shall have the right to audit billings both before and after payment. Payment under this Contract shall not foreclose the right of the City to recover excessive or illegal payments

23. Indemnification

The Contractor shall indemnify, hold harmless, or insure the City, including its officers, employees or agents, against liability, claims, damages, losses or expenses, including attorney fees, only to the extent that the liability, damages, losses or costs are caused by, or arise out of, the acts or omissions of the indemnitor or its officers, employees or agents. In the event that any action, suit or proceeding related to the services performed by the Contractor or any officer, agent, employee, servant or subcontractor under this Contract is brought against the Contractor, the Contractor shall, as soon as practicable but no later than two (2) business days after it receives notice thereof, notify the legal counsel of the City.

24. New Mexico Tort Claims Act

Any liability incurred by the City of Santa Fe in connection with this Contract is subject to the immunities and limitations of the New Mexico Tort Claims Act, NMSA 1978, Section 41-4-1, et. seq., as amended. The City and its "public employees" as defined in the New Mexico Tort Claims Act, do not waive sovereign immunity, do not waive any defense and do not waive any limitation of liability pursuant to law. No provision in this Contract modifies or waives any provision of the New Mexico Tort Claims Act.

25. Invalid Term or Condition

If any term or condition of this Contract shall be held invalid or unenforceable, the remainder of this Contract shall not be affected and shall be valid and enforceable.

26. Enforcement of Contract

A party's failure to require strict performance of any provision of this Contract shall not waive or diminish that party's right thereafter to demand strict compliance with that or any other provision. No waiver by a party of any of its rights under this Contract shall be effective unless express and in writing,

and no effective waiver by a party of any of its rights shall be effective to waive any other rights.

27. Notices

Any notice required to be given to either party by this Contract shall be in writing and shall be delivered in person, by courier service or by U.S. mail, either first class or certified, return receipt requested, postage prepaid, as follows:

To the City:	**To the Contractor:**
Chief Procurement Officer purchasing@santafenm.gov PO Box 909 Santa Fe, NM 87504-0909 Caryn Grosse, PMP Project Manager III City of Santa Fe Public Works 2651 Siringo Road, Building E Santa Fe, NM 87505-5229 clgrosse@santafenm.gov (505) 955-5938	AnchorBuilt Inc. Ray Zamora President PO Box 27688 Albuquerque, NM 87125 ray.zamora@anchorbuilt.com (505) 342-2452

28. Authority

If Contractor is other than a natural person, the individual(s) signing this Contract on behalf of Contractor represents and warrants that he or she has the power and authority to bind Contractor, and that no further action, resolution, or approval from Contractor is necessary to enter into a binding contract.

29. Progress Payments

Based upon Application for Payment submitted to the City by the Contractor and Certificates for Payment issued by the City, the City shall make progress payments on account of the Contract sum to the Contractor as provided in the Contract documents for the period ending the last day of the month as follows:

Not later than twenty-one (21) days following the end of the period covered by the Application for Payment, one hundred percent (100%) of the portion of the Contract Sum properly allocable to labor, materials, and equipment incorporated in the work and one hundred percent (100%) of the portion of the Contract sum properly allocable to materials and equipment suitably stored at the site or some other location agreed upon in writing for the period covered by the Application for Payment, less the aggregate of previous payments made by the City; and upon substantial completion of the entire work, a sum sufficient to increase the total payments to one hundred percent (100%) of the Contract sum, less such amounts as the City shall determine for all incomplete work and unsettled claims as provided in the Contract documents.

30. Final Payment

Final payment, constituting the entire unpaid balance of the Contract sum, unless it is a disputed payment, shall be paid by the City to the Contractor within twenty-one (21) calendar days, after all deficiencies to the Contract document that were noted during the Substantial Completion Inspection and listed on the attachment to the Certificate of Substantial Completion have been corrected, and provided the Contract has been fully performed and a final Certificate for Payment has been issued by the City. In addition, the Contractor shall provide to the City a certified statement of Release of Lien (AIA Document G706A or approved form), Consent of Surety, Warranty from Prime Contractor, Warranties from Suppliers and Manufacturers, training sessions, equipment/operating manuals, and as-built drawings.

31. Schedule

The Contractor shall, within five (5) days after the effective date of Notice to Proceed, prepare and submit a progress schedule covering project operations for the 30-day Contract period. This progress schedule shall be of the type generally referred to as a Critical Path Method (CPM), Critical Path Schedule (CPS), and Critical Path Analysis (CPA), and other similar designations. The CPM shall be used to control the timing and sequences of the project. All work shall be done in accordance with the CPM Planning and Scheduling. A written statement of explanation shall be submitted with the progress schedule. All costs incurred by the contractor to implement the CPM shall be borne by the Contractor and are part of their Contract.

32. General and Special Provisions

A. Terms used in this Contract which are defined in the Conditions of the Contract shall have the meanings designated in those Conditions.

B. An enumeration of the Contractor's General Comprehensive Liability Insurance requirements.

C. Appears in the General Conditions of the Contract for construction. Insurance requirements are also described in the Instructions to the Bidder section of the Project Manual. Contractor shall maintain adequate insurance in at least the maximum amounts, which the City could be liable under the New Mexico Tort Claims Act and shall provide proof of such insurance coverage to the City. It is the sole responsibility of the Contractor to comply with the law.

D. This Contract shall not become effective until: (1) approved by the Governing Body; and (2) signed by all parties required to sign this Contract.

E. The Contractor shall maintain detailed time records which indicate the date, time and nature of services rendered. These records shall be subject to inspection by the City, the Department of Finance and Administration and the State Auditor. The City shall have the right to audit billings both before and after payment. Payment under this Contract shall not foreclose the right of the City to recover excessive illegal payments.

F. The Contractor warrants that the Contractor presently has no interest and shall not acquire any interest, direct or indirect, which would conflict in any manner or degree with the performance or services required under this Contract.

G. The Contractor hereby warrants that the Contractor complies with the Americans with Disabilities Act, 29 CFR 1630.

H. Gender, Singular/Plural. Words of any gender used in this Contract shall be held and construed to include any other gender, and words in the singular number shall be held to include the plural, unless the context otherwise requires.

I. Captions and Section Headings. The captions and section headings contained in this Contract are for convenience of reference only, and in no way limit, define, or enlarge the terms, scope, and conditions of this Contract.

J. Certificates and Documents Incorporated. All certificates and documentation required by the provisions of the Contract shall be attached to this Contract at the time of execution and are hereby incorporated by reference as though set forth in full in this Contract to the extent they are consistent with its conditions and terms.

K. Separability. If any clause or provision of this Contract is illegal, invalid or unenforceable under present or future laws effective during the term of this Contract, then and in that event, it is the intention of the parties hereto that the remainder of this Contract shall not be affected thereby.

L. Words and Phrases. Words, phrases, and abbreviations, which have well-known technical or trade meanings used in the Contract documents shall be used according to such recognized meaning. In the event of a conflict, the more stringent meaning shall govern.

M. Relationship of Contract Documents. The Contract Documents are complementary, and any requirement of one Contract Document shall be as binding as if required by all.

N. Pursuant to NMSA 1978, Section 13-1-191, reference is hereby made to the Criminal Laws of New Mexico (including NMSA 1978, Sections 30-14-1, 30-24-2, and 30-41-1 through 30-41-3) which prohibit bribes, kickbacks, and gratuities, violation of which constitutes a felony. Further, the Procurement Code (NMSA 1978, Sections 13-1-28 through 13-1-199) imposes civil and criminal penalties for its violation.

O. Pursuant to NMSA 1978, Section 13-4-11. Reference is hereby made to the Minimum Wage on Public Works; weekly payments; posting wage scale; withholding funds.

IN WITNESS WHEREOF, the Parties have executed this Contract as of the date of the signature by the required approval authorities below.

CITY OF SANTA FE:

_____
ALAN WEBBER, MAYOR

DATE: _____

CONTRACTOR:
AnchorBuilt Inc.

Raymond Zamora
_____
RAY ZAMORA, PRESIDENT

DATE: Nov 24, 2025

NMBTIN: 02-387068-000

ATTEST:

_____
ANDREA SALAZAR, CITY CLERK

Approved to form and legal sufficiency by:

Kevin L. Nault
Kevin L. Nault (Nov 25, 2025 00:27:13 MST)
ASSISTANT CITY ATTORNEY

APPROVED FOR FINANCES:

Emily K. Oster
EMILY OSTER, FINANCE DIRECTOR

Exhibit A

Bidder Instructions:
Items - Bidders do not have the ability to add or delete items.

Approx. Qty. - Quantities provides are estimates, only, and do not establish a definite quantity contract. Actual qua ntities purchased under a resulting agreement may vary.
UOM (Unit of Measure) - Bidders do not have the ability to change the UOM. Any variation from the UOM identi fied may be provided in the Comments.
Article and Description - Bidder cannot change Article and Description. Any clarification, explanation, brand na me identification, etc. must be provided in the Comments.
Unit Price - Bidders must provide pricing that conforms with the identified Unit Price.
Comments - Bidders may only provide comments to explain or clarify an item, identify a brand name, or provide in formation as specifically stated in the corresponding ITB

Item	Approx. Qty.	UOM	Article and Description	Unit Price	Comments
			Wage Rates for Projects Under $60,000.00		
1	1	HR - Hour	Superintendent - Regular Hourly Rate	$ 85.00	
2	1	HR - Hour	Superintendent - Overtime Hourly Rate	$ 85.00	
3	1	HR - Hour	Journeyman or Experienced Worker - Regular Hourly Rate	$ 65.00	
4	1	HR - Hour	Journeyman or Experienced Worker - Overtime Hourly Rate	$ 97.50	
5	1	HR - Hour	Laborer - Regular Hourly Rate	$ 45.00	
6	1	HR - Hour	Laborer - Overtime Hourly Rate	$ 67.50	
			Wage Rates for Projects Over $60,000.00		
7	1	HR - Hour	Superintendent - Regular Hourly Rate	$ 85.00	
8	1	HR - Hour	Superintendent - Overtime Hourly Rate	$ 85.00	
9	1	HR - Hour	Journeyman or Experienced Worker - Regular Hourly Rate	$ 75.00	
10	1	HR - Hour	Journeyman or Experienced Worker - Overtime Hourly Rate	$ 112.50	
11	1	HR - Hour	Laborer - Regular Hourly Rate	$ 48.00	
12	1	HR - Hour	Laborer - Overtime Hourly Rate	$ 72.00	
13	1	Daily	Temporary Site Office Trailer, rental rate	$ 16.50	
14	1	Daily	Temporary Fencing, rental rate	$ 16.75	
15	1	Daily	Sanitary/toilet Facilities, rental rate	$ 6.75	
16		Percent	Discount off all materials. Enter zero if no discount is offered.	0%	Bid Item on Munis would not allo zero (0) as an entry.

Bid Submitted by: AnchorBuilt Inc. - May 28, 2025

On-Call Construction ITB 25163_AnchorBuilt

Final Audit Report 2025-11-25

Created:	2025-11-24
By:	MATTHEW HARDING (mrharding@santafenm.gov)
Status:	Signed
Transaction ID:	CBJCHBCAABAA2o90vGNZVN2-yx6IcRplrZx0SE2Ru0YT

"On-Call Construction ITB 25163_AnchorBuilt" History

Document created by MATTHEW HARDING (mrharding@santafenm.gov)
2025-11-24 - 8:01:30 PM GMT- IP address: 63.232.20.2

Document emailed to Ray Zamora (ray.zamora@anchorbuilt.com) for signature
2025-11-24 - 8:02:06 PM GMT

Email sent to clgroose@santafenm.gov bounced and could not be delivered
2025-11-24 - 8:02:15 PM GMT

Email viewed by Ray Zamora (ray.zamora@anchorbuilt.com)
2025-11-24 - 8:09:42 PM GMT- IP address: 172.225.199.15

Document e-signed by Ray Zamora (ray.zamora@anchorbuilt.com)
Signature Date: 2025-11-24 - 8:15:53 PM GMT - Time Source: server- IP address: 96.92.69.21

Document emailed to Kevin Nault (klnault@santafenm.gov) for signature
2025-11-24 - 8:15:55 PM GMT

Email sent to clgroose@santafenm.gov bounced and could not be delivered
2025-11-24 - 8:16:06 PM GMT

Email viewed by Kevin Nault (klnault@santafenm.gov)
2025-11-25 - 7:26:43 AM GMT- IP address: 172.59.2.22

Signer Kevin Nault (klnault@santafenm.gov) entered name at signing as Kevin L. Nault
2025-11-25 - 7:27:11 AM GMT- IP address: 172.59.2.22

Document e-signed by Kevin L. Nault (klnault@santafenm.gov)
Signature Date: 2025-11-25 - 7:27:13 AM GMT - Time Source: server- IP address: 172.59.2.22

Agreement completed.
2025-11-25 - 7:27:13 AM GMT

Powered by Adobe Acrobat Sign

Client#: 1144006 ANCHOINC1

ACORD™ CERTIFICATE OF LIABILITY INSURANCE

DATE (MM/DD/YYYY) 3/07/2025

THIS CERTIFICATE IS ISSUED AS A MATTER OF INFORMATION ONLY AND CONFERS NO RIGHTS UPON THE CERTIFICATE HOLDER. THIS CERTIFICATE DOES NOT AFFIRMATIVELY OR NEGATIVELY AMEND, EXTEND OR ALTER THE COVERAGE AFFORDED BY THE POLICIES BELOW. THIS CERTIFICATE OF INSURANCE DOES NOT CONSTITUTE A CONTRACT BETWEEN THE ISSUING INSURER(S), AUTHORIZED REPRESENTATIVE OR PRODUCER, AND THE CERTIFICATE HOLDER.

IMPORTANT: If the certificate holder is an ADDITIONAL INSURED, the policy(ies) must have ADDITIONAL INSURED provisions or be endorsed. If SUBROGATION IS WAIVED, subject to the terms and conditions of the policy, certain policies may require an endorsement. A statement on this certificate does not confer any rights to the certificate holder in lieu of such endorsement(s).

PRODUCER	CONTACT NAME: Bridget Brakeall
USI Insurance Services, LLC 4100 Osuna Road NE Suite 2-203 Albuquerque, NM 87109	PHONE (A/C, No, Ext): 602.374.1331 FAX (A/C, No): E-MAIL ADDRESS: bridget.brakeall@usi.com

INSURER(S) AFFORDING COVERAGE	NAIC #
INSURER A : Continental Casualty Company	20443
INSURER B : Builders Trust of New Mexico	99999
INSURER C : Valley Forge Insurance Company	20508
INSURER D :	
INSURER E :	
INSURER F :	

INSURED
AnchorBuilt, Inc.
P.O. Box 27688
Albuquerque, NM 87125-7688

COVERAGES **CERTIFICATE NUMBER:** **REVISION NUMBER:**

THIS IS TO CERTIFY THAT THE POLICIES OF INSURANCE LISTED BELOW HAVE BEEN ISSUED TO THE INSURED NAMED ABOVE FOR THE POLICY PERIOD INDICATED. NOTWITHSTANDING ANY REQUIREMENT, TERM OR CONDITION OF ANY CONTRACT OR OTHER DOCUMENT WITH RESPECT TO WHICH THIS CERTIFICATE MAY BE ISSUED OR MAY PERTAIN, THE INSURANCE AFFORDED BY THE POLICIES DESCRIBED HEREIN IS SUBJECT TO ALL THE TERMS, EXCLUSIONS AND CONDITIONS OF SUCH POLICIES. LIMITS SHOWN MAY HAVE BEEN REDUCED BY PAID CLAIMS.

INSR LTR	TYPE OF INSURANCE	ADDL INSR	SUBR WVD	POLICY NUMBER	POLICY EFF (MM/DD/YYYY)	POLICY EXP (MM/DD/YYYY)	LIMITS	
A	X COMMERCIAL GENERAL LIABILITY	X	X	6080684959	03/10/2025	03/10/2026	EACH OCCURRENCE	$1,000,000
	CLAIMS-MADE X OCCUR						DAMAGE TO RENTED PREMISES (Ea occurrence)	$100,000
							MED EXP (Any one person)	$15,000
							PERSONAL & ADV INJURY	$1,000,000
	GEN'L AGGREGATE LIMIT APPLIES PER:						GENERAL AGGREGATE	$2,000,000
	POLICY X PRO-JECT LOC						PRODUCTS - COMP/OP AGG	$2,000,000
	OTHER:							$
C	AUTOMOBILE LIABILITY	X	X	6080684962	03/10/2025	03/10/2026	COMBINED SINGLE LIMIT (Ea accident)	$1,000,000
	X ANY AUTO						BODILY INJURY (Per person)	$
	OWNED AUTOS ONLY / SCHEDULED AUTOS						BODILY INJURY (Per accident)	$
	X HIRED AUTOS ONLY / X NON-OWNED AUTOS ONLY						PROPERTY DAMAGE (Per accident)	$
								$
A	X UMBRELLA LIAB X OCCUR			6080684976	03/10/2025	03/10/2026	EACH OCCURRENCE	$5,000,000
	EXCESS LIAB CLAIMS-MADE						AGGREGATE	$5,000,000
	DED X RETENTION $10,000							$
B	WORKERS COMPENSATION AND EMPLOYERS' LIABILITY Y / N		X	WC1000003908	03/10/2025	03/10/2026	X PER STATUTE OTH-ER	
	ANY PROPRIETOR/PARTNER/EXECUTIVE OFFICER/MEMBER EXCLUDED? Y	N / A					E.L. EACH ACCIDENT	$2,000,000
	(Mandatory in NH)						E.L. DISEASE - EA EMPLOYEE	$2,000,000
	If yes, describe under DESCRIPTION OF OPERATIONS below						E.L. DISEASE - POLICY LIMIT	$2,000,000
A	Stored Material			6080684959	03/10/2025	03/10/2026	*See Desc Of Ops	
C	HAPD			6080684962	03/10/2025	03/10/2026	*See Desc Of Ops	
A	Leased/Rented Eq			6080684959	03/10/2025	03/10/2026	*See Desc Of Ops	

DESCRIPTION OF OPERATIONS / LOCATIONS / VEHICLES (ACORD 101, Additional Remarks Schedule, may be attached if more space is required)

Insurer A - Stored Material - Limit $750,000; Deductible $2,5000 - Temp Storage - Limit $300,000
Insurer C- HAPD - Limit $75,000 - Compensation Deductible $500; Collison Deductible $1,000
Insurer A - Leased and Rented Equipment - Limit $500,000; Deductible $1,0000

The General Liability and Automobile Liability policies include an automatic Additional Insured endorsement
(See Attached Descriptions)

CERTIFICATE HOLDER

City of Santa Fe
2651 Siringo Road, Building E
Santa Fe, NM 87505-0000

CANCELLATION

SHOULD ANY OF THE ABOVE DESCRIBED POLICIES BE CANCELLED BEFORE THE EXPIRATION DATE THEREOF, NOTICE WILL BE DELIVERED IN ACCORDANCE WITH THE POLICY PROVISIONS.

AUTHORIZED REPRESENTATIVE

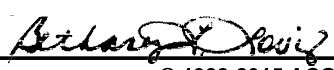

© 1988-2015 ACORD CORPORATION. All rights reserved.

From: DUTTON-LEYDA, TRAVIS K.
To: KAHAHANE, ELIZABETH L.
Cc: Purchasing DET
Subject: Re: Determination Request – Miscellaneous General Contracting work for the City of Santa Fe
Date: Wednesday, August 20, 2025 9:05:00 AM
Attachments: image001.png

Hi, this is construction.

Thank you.

Regards,

Travis Dutton-Leyda
Chief Procurement Officer
City of Santa Fe
200 Lincoln Avenue
Santa Fe, NM 87501
505-629-8351
tkduttonleyda@santafenm.gov

https://santafenm.gov/finance-2/purchasing-1

CITY OF SANTA FE
FACILITIES

Vision without action is merely a dream.
Action without vision passes the time.
Vision with action can change the world. ~ Joel A. Barker

> On Aug 20, 2025, at 8:56 AM, KAHAHANE, ELIZABETH L. <elkahahane@santafenm.gov> wrote:
>
> Aloha Purchasing!
>
> Facilities Division is requesting a SOW determination for the following:
>
> > The Contractor shall perform the following work in accordance with their Bid Pricing, attached hereto and made a part thereof, as Exhibit A:
> > 1. This work shall include Miscellaneous General Contracting work for the City

of Santa Fe.

2. The Contractor shall be required to provide On-Call General Contracting Services for any number of the activities listed under this Scope of Work upon the request of the City. Once a need is identified, the City will issue a written Task Order to the Contractor detailing the services required. Upon receiving the City's request for services, the Contractor shall promptly provide the City with an estimate (based upon the rates submitted in the Bid Form), cost summary, and project schedule required to complete the assignment or task. Project schedules, negotiated price, and completion dates shall be determined on a project-by-project basis and dependent upon the urgency of that task. The Contractor may be required to do some of the work in phases. The Contractor shall be required to provide the requested labor and all equipment and materials within one week of a request issuance of a Notice to Proceed unless otherwise arranged. The Contractor shall agree to provide required labor within 24 hours for emergency situations whenever possible.

3. The City of Santa Fe Public Works Facilities Division shall be able to utilize this On-Call Contract as needed and as funding is available. All other City of Santa Fe staff will only be authorized to utilize this On-Call Contract with prior, written approval of the scope of work, from the Facilities Division Director, before commencing any work applicable to this On-Call Contract.

4. Contractor is responsible for all required permits and licenses required to perform this work. Contractor shall be responsible for adherence to the Contract Documents, Construction Documents, Specifications, and approved directives.

5. Contractor shall be responsible for any applicable Local, County, State and Federal requirements and permits.

6. Contractor shall be responsible for verifications of all existing conditions, measurements, and dimensions for bidding. Contractor shall be responsible for all permits, fees, and State and/or City inspections associated with their work.

Please let me know if additional information is required.
Thank you!

Best,
Elizabeth "Lisa" Kahahane, CPO
Contract Administrator | Facilities Division | Public Works Dept.
Email: elkahahane@santafenm.gov
M: (505) 795-2439
O: (505) 955-5934

CITY OF SANTA FE
FACILITIES

This e-mail and any attachments may contain confidential information and/or

information protected by intellectual property rights for the exclusive attention of the intended addressees. If you have received this transmission in error, please immediately notify the sender by return e-mail and delete this message and its attachments. Unauthorized use, copying or further full or partial distribution of this e-mail or its contents is prohibited.

Services Offered to the City of Santa Fe (FY26)

Approved:
These services have been approved by the New Mexico Council for Purchasing from Persons with Disabilities and are available through Horizons of New Mexico.

- ADA Accessibility Consulting Services
- Auctioneering Services
- Bulk Mailing and Sorting
- Call Center Services
- Computer Refurbishing
- Courier Services
- Decontamination, Sanitation and Sterilization Services
- Debris Removal
- Document Imaging
- Document Shredding
- Envelope Stuffing
- General Labor
- Hard Drive Destruction
- Janitorial and Housekeeping Services – Including Carpet Cleaning & Floor Care
- Landscape Irrigation
- Landscaping
- Mailing Services
- Management of an Assistive Technology Reuse and Recycling Program
- Medical Waste Disposal
- Meeting Minute Preparation Services
- Pest Control and Extermination Services
- Printing Services
- Rest Area Maintenance
- Screen Printing
- Snow Removal
- Temporary Staffing Services
- Yard, Grounds, and Lawn Maintenance

Permissive:
The services have been approved by the New Mexico Council for Purchasing from Persons with Disabilities as permissible for sale under the State Use Act through Horizons of New Mexico. While the Council recognizes that certain Horizons of New Mexico members are capable of performing the services listed below, said services are considered permissive and excluded from the mandatory aspect of the State Use Program. Any procurement of the below services through Horizons of New Mexico is at the discretion of the purchasing agent and will be considered by the Council on a case-by-case basis.

- Graphic Design
- Graphic Design - Logo Design
- IT – Enterprise Application
- IT – IV & V
- IT Network and Database Management
- IT Support
- IT Security Services
- IT – Web Design
- IT – Web Programmer
- Marketing
- Social Media Marketing

For the complete State Use service list, please go to: http://horizonsofnewmexico.org/services.html

GB Packet_AnchorBuilt_On-Call GC ITB 25163

Final Audit Report 2025-12-08

Created:	2025-12-05
By:	Elizabeth Kahahane (elkahahane@santafenm.gov)
Status:	Signed
Transaction ID:	CBJCHBCAABAADEvx1XIgm-5diKJMB42beioCXhnv27G-

"GB Packet_AnchorBuilt_On-Call GC ITB 25163" History

Document created by Elizabeth Kahahane (elkahahane@santafenm.gov)
2025-12-05 - 5:03:43 PM GMT- IP address: 63.232.20.2

Document emailed to CARYN GROSSE (clgrosse@santafenm.gov) for signature
2025-12-05 - 5:06:34 PM GMT

Email viewed by CARYN GROSSE (clgrosse@santafenm.gov)
2025-12-05 - 5:44:20 PM GMT- IP address: 104.47.64.254

Document e-signed by CARYN GROSSE (clgrosse@santafenm.gov)
Signature Date: 2025-12-05 - 5:44:42 PM GMT - Time Source: server- IP address: 63.232.20.2

Document emailed to Timothy Farrell (tgfarrell@santafenm.gov) for signature
2025-12-05 - 5:44:44 PM GMT

Email viewed by Timothy Farrell (tgfarrell@santafenm.gov)
2025-12-05 - 5:44:49 PM GMT- IP address: 62.10.205.21

Document e-signed by Timothy Farrell (tgfarrell@santafenm.gov)
Signature Date: 2025-12-05 - 5:49:40 PM GMT - Time Source: server- IP address: 174.218.19.230

Document emailed to JOHN BURNETT (jsburnett@santafenm.gov) for signature
2025-12-05 - 5:49:42 PM GMT

Email viewed by JOHN BURNETT (jsburnett@santafenm.gov)
2025-12-08 - 2:52:58 PM GMT- IP address: 71.228.98.124

Document e-signed by JOHN BURNETT (jsburnett@santafenm.gov)
Signature Date: 2025-12-08 - 2:53:17 PM GMT - Time Source: server- IP address: 71.228.98.124

Agreement completed.
2025-12-08 - 2:53:17 PM GMT

Powered by Adobe Acrobat Sign

GB_Packet_AnchorBuilt_On-Call_GC_ITB_25163_v3.0 E

Final Audit Report 2025-12-24

Created:	2025-12-19
By:	RACHEL GABALDON (rdgabaldon@santafenm.gov)
Status:	Signed
Transaction ID:	CBJCHBCAABAAVyvqKdEqnuqVrRJGtVsmqG5hAZ8M1Jo7

"GB_Packet_AnchorBuilt_On-Call_GC_ITB_25163_v3.0 E" History

Document created by RACHEL GABALDON (rdgabaldon@santafenm.gov)
2025-12-19 - 5:05:46 PM GMT- IP address: 63.232.20.2

Document emailed to ajhopkins@santafenm.gov ajhopkins@santafenm.gov (ajhopkins@santafenm.gov) for signature
2025-12-19 - 5:07:22 PM GMT

Email viewed by ajhopkins@santafenm.gov ajhopkins@santafenm.gov (ajhopkins@santafenm.gov)
2025-12-19 - 6:11:03 PM GMT- IP address: 104.47.65.254

Document e-signed by ajhopkins@santafenm.gov ajhopkins@santafenm.gov (ajhopkins@santafenm.gov)
Signature Date: 2025-12-19 - 6:11:16 PM GMT - Time Source: server- IP address: 63.232.20.2

Document sent to JoAnn Lovato (jdlovato@santafenm.gov) and Travis Dutton-Leyda (tkduttonleyda@santafenm.gov) for signature. One of them to sign
2025-12-19 - 6:11:19 PM GMT

Email viewed by Travis Dutton-Leyda (tkduttonleyda@santafenm.gov)
2025-12-19 - 6:24:56 PM GMT- IP address: 63.232.20.2

Email viewed by Travis Dutton-Leyda (tkduttonleyda@santafenm.gov)
2025-12-22 - 5:20:50 AM GMT- IP address: 146.75.203.1

Email viewed by JoAnn Lovato (jdlovato@santafenm.gov)
2025-12-23 - 10:58:52 PM GMT- IP address: 63.232.20.2

Document e-signed by JoAnn Lovato (jdlovato@santafenm.gov)
Signature Date: 2025-12-23 - 10:59:45 PM GMT - Time Source: server- IP address: 63.232.20.2

Powered by Adobe Acrobat Sign

Document emailed to EMILY OSTER (ekoster@santafenm.gov) for signature

2025-12-23 - 10:59:48 PM GMT

Email viewed by EMILY OSTER (ekoster@santafenm.gov)

2025-12-24 - 4:44:49 PM GMT- IP address: 174.218.241.65

Document e-signed by EMILY OSTER (ekoster@santafenm.gov)

Signature Date: 2025-12-24 - 4:45:56 PM GMT - Time Source: server- IP address: 174.218.241.65

Agreement completed.

2025-12-24 - 4:45:56 PM GMT

CITY OF SANTA FE

Date: December 3, 2025

To: Governing Body

From: Caryn Grosse, PMP, Public Works Project Manager III

Via: Sam Burnett, Interim Public Works Department Director JOHN BURNETT (Dec 8, 2025 07:51:38 MST)
Tim Farrell, Interim Facilities Division Director Timothy Farrell

Subject: On-Call Price Agreement for City-Wide Miscellaneous Construction Services

Vendor Name: JDR & Associates

Vendor Number: 9248

ACTION:
Request for Approval of an On-Call Price Agreement with JDR & Associates in the Total Amount of $10,000,000 Including NMGRT for City-Wide Miscellaneous Construction Services for a Term of 10 Years. (Caryn Grosse, Public Works Project Manager III, clgrosse@santafenm.gov)

CONTRACT NUMBER:
The FY26 Munis Contract Number is 3260208.

BACKGROUND AND SUMMARY:
The Public Works Department Facilities Division uses on-call services to augment the skills, licensure, and capacity of staff to address facility issues and emergencies in a timely, safe, and compliant manner. The Facilities Division typically maintains on-call contracts for general contracting, mechanical, electrical, plumbing, roofing, remediation, and landscaping services.

In accordance with the Invitation to Bid (ITB No. 25163) for On-Call City-Wide Miscellaneous Construction Services, multiple responsive vendors were selected for contracts based on lowest bidder and performance criteria: AnchorBuilt Inc., B&D Industries Inc., Davenport Construction Management LLC, Enviroworks LLC, JDR & Associates, LLR Construction LLC, and Unified Contractor, Inc. JDR & Associates has provided services throughout the City and has proven to be cost-effective, reliable, and capable of consistently providing high quality results.

On-call contracts are not a guarantee of payment. These contracts are only used, and purchase orders issued, as needs arise and funding is available. The $10,000,000 (including 8.1875% NMGRT) maximum for this contract is based on the historical and anticipated needs across the City over the next ten years.

ATTACHMENTS:
On-Call Price Agreement for Construction Services
Proposal – Exhibit A
Certificate of Insurance
CPO Determination
Horizons Service List

PROCUREMENT METHOD:
The procurement method for this contract is the Invitation to Bid No. 25163, dated April 24, 2025.

Chief Procurement Officer (CPO)/Designee: JoAnn Lovato Montaño Date: 12/23/2025
CPO Comment/Exceptions: _____

FUNDING SOURCE:
Funding will be provided on a project-by-project basis.
Fund Name/Number: Various
Munis Org Name/Number: Various
Munis Object Name/Number: Various

Budget Officer/Designee: Andy Hopkins Date: 12/19/2025
Budget Officer Comment/Exceptions: _____

ASSOCIATED APPROVALS:
IT Components included? ☐ Yes | ☒ No
Approval: _____ Title: _____ Date: _____
Comment/Exceptions: _____

Treasury/Point of Sale Components included? ☐ Yes | ☒ No
Approval: _____ Title: _____ Date: _____
Comment/Exceptions: _____

Vehicles included? ☐ Yes | ☒ No
Approval: _____ Title: _____ Date: _____
Comment/Exceptions: _____

Construction to City Facilities, Furniture, and/or Fixtures, included? ☒ Yes | ☐ No
Approval: _____ Title: _____ Date: _____
Comment/Exceptions: Timothy Farrell

Is this an externally funded purchase? ☐ Yes | ☒ No
If yes, what is the issuing agency: _____
Approval: _____ Title: _____ Date: _____
Comment/Exceptions: _____

Capital Asset or Project? ☐ Yes | ☒ No
Project Ledger Number _____
Approval: _____ Title: _____ Date: _____
Comment/Exceptions: _____

Item #: _____
Munis Contract #: 3260208
ITB No.: 25163

CITY OF SANTA FE

ON-CALL PRICE AGREEMENT

CONSTRUCTION CONTRACT

City-Wide Miscellaneous Construction Services

THIS CONTRACT is made and entered into by and between the City of Santa Fe, New Mexico, hereinafter referred to as the "City," and **JDR & Associates**, hereinafter referred to as the "Contractor," and is effective as of the date set forth below upon which it is executed by the Parties.

RECITALS

WHEREAS, the City, through its Governing Body, is authorized to enter into an On-Call Price Agreement for the project; and

WHEREAS, the City has procured this Contract according to the established State and Local Purchasing procedures for contracts of the type and amount; and

The City and the Contractor hereby agree as follows:

1. Scope of Work

A. The Contractor shall perform the following work in accordance with their Bid Pricing, attached hereto and made a part thereof, as Exhibit A:

1. This work shall include Miscellaneous General Contracting work for the City of Santa Fe.
2. The Contractor shall be required to provide On-Call Miscellaneous Construction Services for any number of the activities listed under this Scope of Work upon the request of the City. Once a need is identified, the City's Engineers, Project Managers, and Project Administrators (collectively "Project Manager") may issue Task Orders for items described herein. The terms and conditions shall be incorporated in each Task Order issued hereunder. Once a need is identified, the Project Manager will issue a written Task Order to the Contractor detailing the services required. Upon receiving the Task Order, the Contractor shall promptly provide the Project Manager with an estimate, based upon the rates included in their ITB, a cost summary, and a proposed schedule required to complete the assignment or task. Project schedules, negotiated price, and completion dates shall be determined on project-by-project basis and dependent upon the urgency of that task. The Contractor may be required to do some of the work in phases. The City's Project Manager

may issue a Notice to Proceed by signing the Notice after the task price and schedule are finalized by the Contractor, subject to the exception in Article 1(A)(3) below. The Contractor shall be required to provide the requested labor and all equipment and materials within one week of a request issuance of a Notice to Proceed unless otherwise arranged. The Contractor shall agree to provide required labor within 24 hours for emergency situations whenever possible. The Contractor shall not perform any work without a Notice to Proceed signed by the Project Manager, and the City shall not pay for any work performed without a signed Notice to Proceed.

3. If a Task Order does not specify which City division is issuing the Task Order, Contractor shall enquire before acting on a Notice to Proceed. For any City division other than the Public Works Facilities Division the Notice to Proceed is effective only if written approval of the scope of work from the Facilities Division Director is attached.

4. Contractor is responsible for all required permits, licenses, and inspections required to perform this work, and shall comply with applicable municipal, county, state, and federal requirements. Contractor shall be responsible for verification of all existing conditions, measurements, dimensions, adherence to the Contract Documents, Construction Documents, Specifications, and approved directives.

B. Distribution:

City:	Contractor:
Caryn Grosse, PMP Project Manager III City of Santa Fe Facilities Division 2651 Siringo Road, Building E Santa Fe, NM 87505-5229	Davida Garcia Office Manager JDR & Associates 274 Dinosaur Trail Santa Fe, NM 87508

C. Price Adjustments:

The awarded vendor shall maintain fixed pricing for each year of this contract, defined as twelve (12) months starting on and including the Effective Date. Pricing may be adjusted no more than once annually to commercially reasonable rates through an amendment to the price list attached as Exhibit A signed by Contractor and the City's Director of Public Works. Amendments to Exhibit A do not alter Contractor's maximum total compensation pursuant to Article 2 (Compensation) below. The Contractor must submit all pricing increase requests in writing to the City of Santa Fe designated department contact, providing evidence that the request is based on demonstrable market changes impacting the cost of products and services. The request must itemize all proposed changes by line item and include supporting documentation deemed acceptable by the City of Santa Fe (such as a letter from a manufacturer indicating price increases, etc.). The City's decision on acceptable documentation in this context shall be final and binding upon all parties to the contract. No price increase shall result in a higher profit margin. Pricing changes will apply to orders entered on or after the effective date of the price change. Price increases will not be retroactive to purchase orders already issued. Orders will be filled at the price indicated in the purchase order issued by the City.

To facilitate prompt consideration, all requests for price increases must include the following information:

i. Contract Item Number

ii. Current Item Price
iii. Proposed New Price
iv. Percentage of Increase
v. Mill/Supplier Notification of price increase indicating percentage of increase and including the reason for the increase.

2. ITB Compensation

A. Payment. The City shall compensate the Contractor based on Task Orders and the itemized amounts specified in Exhibit A. For the services described in the scope of work, the City will pay the Contractor up to, but not to exceed, $10,000,000.00. The applicable gross receipts tax (8.1875%) shall be shown as a separate amount on each billing or request for payment made under the contract, consistent with NMSA 1978, Section 13-1-108.

B. The compensation represents a maximum amount. The Contractor must notify the City when the Services provided under this Contract approach 90% of compensation total. Services rendered beyond the maximum compensation amount will not be reimbursed unless the Contract is amended in writing prior to the provision of such services.

C. Invoicing and Payment Terms Payment will be made upon the City's acceptance of deliverables and receipt of a detailed, certified invoice from the Contractor. Payments will be sent to the Contractor's designated address. The City shall issue payment in accordance with the timelines required by law. Invoices must be submitted no later than fifteen (15) days after the Contract's termination. Late invoices will not be processed or paid.

D. Extended Payment Terms for Grant-Funded Contracts. For grant-funded agreements, the City may issue payment within forty-five (45) days following submission of an undisputed payment request.

3. Term

THIS CONTRACT SHALL NOT BECOME EFFECTIVE UNTIL APPROVED BY THE CITY. This Contract shall terminate ten (10) years from date of final signature unless terminated pursuant to Paragraph 4 (Termination) or Paragraph 5 (Appropriations). A contract for construction services may not exceed ten (10) years, including all extensions and renewals, except as otherwise provided by NMSA 1978, Section 13-1-150 through 13-1-152 or SFCC 1987, Section 11-13.

4. Termination

A. Grounds. The City may terminate this Contract for convenience or cause. For contracts within their authority, the City Manager or their designee is authorized to provide the notice of termination, otherwise such notice of termination shall be provided by the Mayor or their designee as authorized by the Governing Body. The Contractor may only terminate this Contract based upon the City's uncured, material breach of this Contract.

i. Except as otherwise provided in Paragraphs 7.A and 17, the City shall give Contractor written notice of termination at least thirty (30) days prior to the

intended date of termination.

ii. Contractor shall give City written notice of termination at least thirty (30) days prior to the intended date of termination, which notice shall (i) identify all the City's material breaches of this Contract upon which the termination is based and (ii) state what the City must do to cure such material breaches. Contractor's notice of termination shall only be effective (i) if the City does not cure all material breaches within the thirty (30) day notice period or (ii) in the case of material breaches that cannot be cured within thirty (30) days, the City does not, within the thirty (30) day notice period, notify the Contractor of its intent to cure and begin with due diligence to cure the material breach.

iii. Notwithstanding the foregoing, this Contract may be terminated immediately upon written notice to the Contractor (i) if the Contractor becomes unable to perform the services contracted for, as determined by the City; (ii) if, during the term of this Contract, the Contractor is suspended or debarred by the City; or (iii) the Contract is terminated pursuant to Paragraph 5, "Appropriations," of this Contract.

B. Liability. Except as otherwise expressly allowed or provided under this Contract, the City's sole liability upon termination shall be to pay for acceptable work performed prior to the Contractor's receipt or issuance of a notice of termination; provided, however, that a notice of termination shall not nullify or otherwise affect either party's liability for pre-termination defaults under or breaches of this Contract. The Contractor shall submit an invoice for such work within thirty (30) days of receiving or sending the notice of termination. *THIS PROVISION IS NOT EXCLUSIVE AND DOES NOT WAIVE THE CITY'S OTHER LEGAL RIGHTS AND REMEDIES CAUSED BY THE CONTRACTOR'S DEFAULT/BREACH OF THIS CONTRACT.*

5. Appropriations

The terms of this Contract are contingent upon sufficient appropriations and authorization being made by the Governing Body for the performance of this Contract. If sufficient appropriations and authorization are not made by the Governing Body, this Contract shall terminate immediately upon written notice being given by the City to the Contractor. The City's decision as to whether sufficient appropriations are available shall be accepted by the Contractor and shall be final. If the City proposes an amendment to the Contract to unilaterally reduce funding, the Contractor shall have the option to terminate the Contract or to agree to the reduced funding, within thirty (30) days of receipt of the proposed amendment.

6. Status of Contractor

The Contractor and its agents and employees are independent contractors performing construction services for the City and are not employees of the City. The Contractor and its agents and employees shall not accrue leave, retirement, insurance, bonding, use of City vehicles, or any other benefits afforded to employees of the City as a result of this Contract. The Contractor acknowledges that all sums received hereunder are reportable by the Contractor for tax purposes, including without limitation, self-employment and business income tax. The Contractor agrees not to purport to bind the City unless the Contractor has express written authority to do so, and then only within the strict limits of that authority.

7. On-Call Price Agreement Performance and Payment Bond

A. When a Task Order is issued in excess of twenty-five thousand dollars ($25,000), the following bonds or security shall be delivered to the City and shall become binding on the parties upon the execution of the contract. If the Contractor fails to deliver the required performance and payment bonds, the Contractor's bid shall be rejected, its bid security shall be enforced to the extent of actual damages. Award of the Task Order via Notice to Proceed shall be made pursuant to the Procurement Code in the following manner:

i. a performance bond satisfactory to the City, executed by a surety company authorized to do business in this state and said surety to be approved in federal circular 570 as published by the United States treasury department or the state board of finance or the local governing authority, in an amount equal to one hundred percent of the price specified in the contract; and

ii. a payment bond satisfactory to the City, executed by a surety company authorized to do business in this state and said surety to be approved in federal circular 570 as published by the United States treasury department or the state board of finance or the local governing authority, in an amount equal to one hundred percent of the price specified in the contract, for the protection of all persons supplying labor and material to the contractor or its subcontractors for the performance of the work provided for in the contract.

B. A subcontractor shall provide a performance and payment bond on a public works building project if the subcontractor's contract for work to be performed on a project is one hundred twenty-five thousand dollars ($125,000) or more.

8. Assignment

The Contractor shall not assign or transfer any interest in this Contract or assign any claims for money due or to become due under this Contract without the prior written approval of the City.

9. Subcontracting

The Contractor shall not subcontract any portion of the services to be performed under this Contract without the prior written approval of the City. No such subcontract shall relieve the primary Contractor from its obligations and liabilities under this Contract, nor shall any subcontract obligate direct payment from the City.

10. Release

Final payment of the amounts due under this Contract shall operate as a release of the City, its officers and employees from all liabilities, claims and obligations whatsoever arising from or under this Contract.

11. Confidentiality

Any confidential information provided to or developed by the Contractor in the performance of this Contract shall be kept confidential and shall not be made available to any individual or organization by the Contractor without the prior written approval of the City.

12. Product of Service – Copyright

All materials developed or acquired by the Contractor under this Contract shall become the property of the City and shall be delivered to the City no later than the termination date of this Contract. Nothing developed or produced, in whole or in part, by the Contractor under this Contract shall be the subject of an application for copyright or other claim of ownership by or on behalf of the Contractor.

13. Conflict of Interest; Governmental Conduct Act

A. The Contractor represents and warrants that it presently has no interest and, during the term of this Contract, shall not acquire any interest, direct or indirect, which would conflict in any manner or degree with the performance or services required under the Contract.

B. The Contractor further represents and warrants that it has complied with, and, during the term of this Contract, will continue to comply with, and that this Contract complies with all applicable provisions of the Governmental Conduct Act, NMSA 1978, Chapter 10, Article 16.

C. Contractor's representations and warranties in Paragraphs A and B of this Article 12 are material representations of fact upon which the City relied when this Contract was entered into by the parties. Contractor shall provide immediate written notice to the City if, at any time during the term of this Contract, Contractor learns that Contractor's representations and warranties in Paragraphs A and B of this Article 12 were erroneous on the effective date of this Contract or have become erroneous by reason of new or changed circumstances. If it is later determined that Contractor's representations and warranties in Paragraphs A and B of this Article 12 were erroneous on the effective date of this Contract or have become erroneous by reason of new or changed circumstances, in addition to other remedies available to the City and notwithstanding anything in the Contract to the contrary, the City may immediately terminate the Contract.

D. All terms defined in the Governmental Conduct Act have the same meaning in this section.

14. Amendment

A. This Contract shall not be altered, changed or amended except by instrument in writing executed by the parties hereto and all other required signatories.

B. If the City proposes an amendment to the Contract to unilaterally reduce funding due to budget or other considerations, the Contractor shall, within thirty (30) days of receipt of the proposed Amendment, have the option to terminate the Contract, pursuant to the termination provisions as set forth in Article 4 herein, or to agree to the reduced funding.

15. Change Orders

A. Changes. The Contractor may only make changes or revisions within the Scope of Work as defined by Article 1 and/or Exhibit 1 after receipt of written approval by the City Manager or his/her designee. Such change may only be made to Tasks or Sub-Task as defined in the Scope of Work. Under no circumstance shall such change affect the:

i. Deliverable requirements, as outlined in the Scope of Work;
ii. Due date of any Deliverable, as outlined in the Scope of Work;
iii. Compensation of any Deliverable, as outlined in the Scope of Work;
iv. Contract compensation, as outlined in Article 2; or
v. Contract termination, as outlined in Article 4.

B. Change Request Process. In the event that circumstances warrant a change to accomplish the Scope of Work as described above, a Change Request shall be submitted that meets the following criteria:

i. The Project Manager shall draft a written Change Request for review and approval by the City Manager to include:
   (a) the name of the person requesting the change;
   (b) a summary of the required change;
   (c) the start date for the change;
   (d) the reason and necessity for change;
   (e) the elements to be altered; and
   (f) the impact of the change.

ii. The City Manager shall provide a written decision on the Change Request to the Contractor within a maximum of ten (10) Business Days of receipt of the Change Request. All decisions made by the City Manager are final. Change Requests, once approved, become a part of the Contract, and become binding as a part of the original Contract.

16. Merger

This Contract incorporates all the agreements, covenants, and understandings between the parties hereto concerning the subject matter hereof, and all such covenants, agreements and understandings have been merged into this written contract.

All terms and conditions of **ITB No. 25163** and the Contractor's response to such document(s) are incorporated herein by reference and included in the order of precedence.

No prior Agreement or understanding, oral or otherwise, of the parties or their agents shall be valid or enforceable unless embodied in this Contract.

17. Penalties for Violation of Law

NMSA 1978, Sections 13-1-28 through 13-1-199, imposes civil and criminal penalties for its violation. In addition, the New Mexico criminal statutes impose felony penalties for illegal bribes, gratuities and kickbacks.

18. Equal Opportunity Compliance

The Contractor agrees to abide by all federal and state laws and rules and regulations, and Santa Fe City Code, pertaining to equal employment opportunity. In accordance with all such laws of the State of New Mexico, the Contractor assures that no person in the United States shall, on the grounds of race, religion, color, national origin, ancestry, sex, age, physical or mental handicap, or serious medical condition, spousal affiliation, sexual orientation or gender identity, be excluded from employment with or participation in, be denied the benefits of, or be otherwise subjected to discrimination under any program or activity performed under this Contract. If Contractor is found not to be in compliance with these requirements during the life of this Contract, Contractor agrees to take appropriate steps to correct these deficiencies.

19. Applicable Law

The laws of the State of New Mexico shall govern this Contract, without giving effect to its choice of law provisions. Venue shall be proper only in a New Mexico court of competent jurisdiction in accordance with NMSA 1978, Section 38-3-2. By execution of this Contract, Contractor acknowledges and agrees to the jurisdiction of the courts of the State of New Mexico over any and all lawsuits arising under or out of any term of this Contract.

20. Workers' Compensation

The Contractor agrees to comply with state laws and rules applicable to workers compensation benefits for its employees. If the Contractor fails to comply with the Workers Compensation Act and applicable rules when required to do so, this Contract may be terminated by the City.

21. Other Insurance

If the services contemplated under this Contract will be performed on or in City facilities or property, Contractor shall maintain in force during the entire term of this Contract, the following insurance coverage(s), naming the City as additional insured.

A. **Commercial General Liability** insurance shall be written on an occurrence basis and be a broad as ISO Form CG 00 01 with limits not less than $2,000,000 per occurrence and $2,000,000 in the aggregate for claims against bodily injury, personal and advertising injury, and property damage. Said policy shall include broad form Contractual Liability coverage and be endorsed to name the City of Santa Fe their officials, officers, employees, and agents as additional insureds.

B. **Business Automobile Liability** insurance for all owned, non-owned automobiles, with a combined single limit not less than $1,000,000 per accident.

C. **Broader Coverage and Limits**. The insurance requirements under this Contract shall be the greater of (1) the minimum coverage and limits specified in this Contract, or (2) the broader coverage and maximum limits of coverage of any insurance policy or proceeds available to the Named Insured. It is agreed that these insurance requirements shall not in any way act to reduce coverage that is broader or that includes higher limits than the minimums required herein. No

representation is made that the minimum insurance requirements of this Contract are sufficient to cover the obligations of Contractor hereunder.

D. Contractor shall maintain the above insurance for the term of this Contract and name the City as an additional insured and provide for 30 days cancellation notice on any Certificate of Insurance form furnished by Contractor. Such certificate shall also specifically state the coverage provided under the policy is primary over any other valid and collectible insurance and provide a waiver of subrogation.

22. Records and Financial Audit

The Contractor shall maintain detailed time and expenditure records that indicate the date; time, nature and cost of services rendered during the Contract's term and effect and retain them for a period of three (3) years from the date of final payment under this Contract. The records shall be subject to inspection by the City. The City shall have the right to audit billings both before and after payment. Payment under this Contract shall not foreclose the right of the City to recover excessive or illegal payments

23. Indemnification

The Contractor shall indemnify, hold harmless, or insure the City, including its officers, employees or agents, against liability, claims, damages, losses or expenses, including attorney fees, only to the extent that the liability, damages, losses or costs are caused by, or arise out of, the acts or omissions of the indemnitor or its officers, employees or agents. In the event that any action, suit or proceeding related to the services performed by the Contractor or any officer, agent, employee, servant or subcontractor under this Contract is brought against the Contractor, the Contractor shall, as soon as practicable but no later than two (2) business days after it receives notice thereof, notify the legal counsel of the City.

24. New Mexico Tort Claims Act

Any liability incurred by the City of Santa Fe in connection with this Contract is subject to the immunities and limitations of the New Mexico Tort Claims Act, NMSA 1978, Section 41-4-1, et. seq., as amended. The City and its "public employees" as defined in the New Mexico Tort Claims Act, do not waive sovereign immunity, do not waive any defense and do not waive any limitation of liability pursuant to law. No provision in this Contract modifies or waives any provision of the New Mexico Tort Claims Act.

25. Invalid Term or Condition

If any term or condition of this Contract shall be held invalid or unenforceable, the remainder of this Contract shall not be affected and shall be valid and enforceable.

26. Enforcement of Contract

A party's failure to require strict performance of any provision of this Contract shall not waive or diminish that party's right thereafter to demand strict compliance with that or any other provision. No waiver by a party of any of its rights under this Contract shall be effective unless express and in writing,

and no effective waiver by a party of any of its rights shall be effective to waive any other rights.

27. Notices

Any notice required to be given to either party by this Contract shall be in writing and shall be delivered in person, by courier service or by U.S. mail, either first class or certified, return receipt requested, postage prepaid, as follows:

To the City:	**To the Contractor:**
Chief Procurement Officer purchasing@santafenm.gov PO Box 909 Santa Fe, NM 87504-0909 Caryn Grosse, PMP Project Manager III City of Santa Fe Public Works 2651 Siringo Road, Building E Santa Fe, NM 87505-5229 clgrosse@santafenm.gov (505) 955-5938	Davida Garcia Office Manager JDR & Associates 274 Dinosaur Trail Santa Fe, NM 87508 davida.jdr@gmail.com (505) 471-5901

28. Authority

If Contractor is other than a natural person, the individual(s) signing this Contract on behalf of Contractor represents and warrants that he or she has the power and authority to bind Contractor, and that no further action, resolution, or approval from Contractor is necessary to enter into a binding contract.

29. Progress Payments

Based upon Application for Payment submitted to the City by the Contractor and Certificates for Payment issued by the City, the City shall make progress payments on account of the Contract sum to the Contractor as provided in the Contract documents for the period ending the last day of the month as follows:

Not later than twenty-one (21) days following the end of the period covered by the Application for Payment, one hundred percent (100%) of the portion of the Contract Sum properly allocable to labor, materials, and equipment incorporated in the work and one hundred percent (100%) of the portion of the Contract sum properly allocable to materials and equipment suitably stored at the site or some other location agreed upon in writing for the period covered by the Application for Payment, less the aggregate of previous payments made by the City; and upon substantial completion of the entire work, a sum sufficient to increase the total payments to one hundred percent (100%) of the Contract sum, less such amounts as the City shall determine for all incomplete work and unsettled claims as provided in the Contract documents.

30. Final Payment

Final payment, constituting the entire unpaid balance of the Contract sum, unless it is a disputed payment, shall be paid by the City to the Contractor within twenty-one (21) calendar days, after all deficiencies to the Contract document that were noted during the Substantial Completion Inspection and listed on the attachment to the Certificate of Substantial Completion have been corrected, and provided the Contract has been fully performed and a final Certificate for Payment has been issued by the City. In addition, the Contractor shall provide to the City a certified statement of Release of Lien (AIA Document G706A or approved form), Consent of Surety, Warranty from Prime Contractor, Warranties from Suppliers and Manufacturers, training sessions, equipment/operating manuals, and as-built drawings.

31. Schedule

The Contractor shall, within five (5) days after the effective date of Notice to Proceed, prepare and submit a progress schedule covering project operations for the 30-day Contract period. This progress schedule shall be of the type generally referred to as a Critical Path Method (CPM), Critical Path Schedule (CPS), and Critical Path Analysis (CPA), and other similar designations. The CPM shall be used to control the timing and sequences of the project. All work shall be done in accordance with the CPM Planning and Scheduling. A written statement of explanation shall be submitted with the progress schedule. All costs incurred by the contractor to implement the CPM shall be borne by the Contractor and are part of their Contract.

32. General and Special Provisions

A. Terms used in this Contract which are defined in the Conditions of the Contract shall have the meanings designated in those Conditions.

B. An enumeration of the Contractor's General Comprehensive Liability Insurance requirements.

C. Appears in the General Conditions of the Contract for construction. Insurance requirements are also described in the Instructions to the Bidder section of the Project Manual. Contractor shall maintain adequate insurance in at least the maximum amounts, which the City could be liable under the New Mexico Tort Claims Act and shall provide proof of such insurance coverage to the City. It is the sole responsibility of the Contractor to comply with the law.

D. This Contract shall not become effective until: (1) approved by the Governing Body; and (2) signed by all parties required to sign this Contract.

E. The Contractor shall maintain detailed time records which indicate the date, time and nature of services rendered. These records shall be subject to inspection by the City, the Department of Finance and Administration and the State Auditor. The City shall have the right to audit billings both before and after payment. Payment under this Contract shall not foreclose the right of the City to recover excessive illegal payments.

F. The Contractor warrants that the Contractor presently has no interest and shall not acquire any interest, direct or indirect, which would conflict in any manner or degree with the performance or services required under this Contract.

G. The Contractor hereby warrants that the Contractor complies with the Americans with Disabilities Act, 29 CFR 1630.

H. Gender, Singular/Plural. Words of any gender used in this Contract shall be held and construed to include any other gender, and words in the singular number shall be held to include the plural, unless the context otherwise requires.

I. Captions and Section Headings. The captions and section headings contained in this Contract are for convenience of reference only, and in no way limit, define, or enlarge the terms, scope, and conditions of this Contract.

J. Certificates and Documents Incorporated. All certificates and documentation required by the provisions of the Contract shall be attached to this Contract at the time of execution and are hereby incorporated by reference as though set forth in full in this Contract to the extent they are consistent with its conditions and terms.

K. Separability. If any clause or provision of this Contract is illegal, invalid or unenforceable under present or future laws effective during the term of this Contract, then and in that event, it is the intention of the parties hereto that the remainder of this Contract shall not be affected thereby.

L. Words and Phrases. Words, phrases, and abbreviations, which have well-known technical or trade meanings used in the Contract documents shall be used according to such recognized meaning. In the event of a conflict, the more stringent meaning shall govern.

M. Relationship of Contract Documents. The Contract Documents are complementary, and any requirement of one Contract Document shall be as binding as if required by all.

N. Pursuant to NMSA 1978, Section 13-1-191, reference is hereby made to the Criminal Laws of New Mexico (including NMSA 1978, Sections 30-14-1, 30-24-2, and 30-41-1 through 30-41-3) which prohibit bribes, kickbacks, and gratuities, violation of which constitutes a felony. Further, the Procurement Code (NMSA 1978, Sections 13-1-28 through 13-1-199) imposes civil and criminal penalties for its violation.

O. Pursuant to NMSA 1978, Section 13-4-11. Reference is hereby made to the Minimum Wage on Public Works; weekly payments; posting wage scale; withholding funds.

IN WITNESS WHEREOF, the Parties have executed this Contract as of the date of the signature by the required approval authorities below.

CITY OF SANTA FE:

ALAN WEBBER, MAYOR

DATE: _____

CONTRACTOR:
JDR & Associates

Donald R. Garcia
DONALD R. GARCIA, PRESIDENT

DATE: Nov 26, 2025

NMBTIN: 03-541213-005

ATTEST:

ANDREA SALAZAR, CITY CLERK

Approved to form and legal sufficiency by:

Kevin L. Nault
Kevin L. Nault (Dec 2, 2025 15:29:18 MST)
ASSISTANT CITY ATTORNEY

APPROVED FOR FINANCES:

Emily K. Oster
EMILY OSTER, FINANCE DIRECTOR

Exhibit A

Bidder Instructions:

Items - Bidders do not have the ability to add or delete items.

Approx. Qty. - Quantities provides are estimates, only, and do not establish a definite quantity contract. Actual quantities purchased under a resulting agreement may vary.
UOM (Unit of Measure) - Bidders do not have the ability to change the UOM. Any variation from the UOM identified may be provided in the Comments.
Article and Description - Bidder cannot change Article and Description. Any clarification, explanation, brand name identification, etc. must be provided in the Comments.
Unit Price - Bidders must provide pricing that conforms with the identified Unit Price.
Comments - Bidders may only provide comments to explain or clarify an item, identify a brand name, or provide information as specifically stated in the corresponding ITB

Item	Approx. Qty.	UOM	Article and Description	Unit Price	Comments
			Wage Rates for Projects Under $60,000.00		
1	1	HR - Hour	Superintendent - Regular Hourly Rate	90	
2	1	HR - Hour	Superintendent - Overtime Hourly Rate	135	
3	1	HR - Hour	Journeyman or Experienced Worker - Regular Hourly Rate	75	
4	1	HR - Hour	Journeyman or Experienced Worker - Overtime Hourly Rate	112.5	
5	1	HR - Hour	Laborer - Regular Hourly Rate	65	
6	1	HR - Hour	Laborer - Overtime Hourly Rate	98	
			Wage Rates for Projects Over $60,000.00		
7	1	HR - Hour	Superintendent - Regular Hourly Rate	100	
8	1	HR - Hour	Superintendent - Overtime Hourly Rate	150	
9	1	HR - Hour	Journeyman or Experienced Worker - Regular Hourly Rate	85	
10	1	HR - Hour	Journeyman or Experienced Worker - Overtime Hourly Rate	128	
11	1	HR - Hour	Laborer - Regular Hourly Rate	75	
12	1	HR - Hour	Laborer - Overtime Hourly Rate	113	
13	1	Daily	Temporary Site Office Trailer, rental rate	1500	Trailer Rate per Month
14	1	Daily	Temporary Fencing, rental rate	1000	Fencing Rate Per Month= 1000 sqft
15	1	Daily	Sanitary/toilet Facilities, rental rate	200	Toilet Fac Rate Per Week = $200.00
16		Percent	Discount off all materials. Enter zero if no discount is offered.	0	

On-Call Construction ITB 25163_JDR

Final Audit Report 2025-12-02

Created:	2025-11-25
By:	MATTHEW HARDING (mrharding@santafenm.gov)
Status:	Signed
Transaction ID:	CBJCHBCAABAAQ3WAMdwREwR2_Kt-YSJxEWxX54TnH6oH

"On-Call Construction ITB 25163_JDR" History

Document created by MATTHEW HARDING (mrharding@santafenm.gov)
2025-11-25 - 9:22:27 PM GMT- IP address: 63.232.20.2

Document emailed to Donald Garcia (donald.jdr@gmail.com) for signature
2025-11-25 - 9:23:14 PM GMT

Email viewed by Donald Garcia (donald.jdr@gmail.com)
2025-11-25 - 9:23:21 PM GMT- IP address: 66.249.84.225

Document e-signed by Donald Garcia (donald.jdr@gmail.com)
Signature Date: 2025-11-26 - 9:32:03 PM GMT - Time Source: server- IP address: 104.255.17.44

Document emailed to Kevin Nault (klnault@santafenm.gov) for signature
2025-11-26 - 9:32:04 PM GMT

Email viewed by Kevin Nault (klnault@santafenm.gov)
2025-12-02 - 10:28:43 PM GMT- IP address: 172.59.2.22

Signer Kevin Nault (klnault@santafenm.gov) entered name at signing as Kevin L. Nault
2025-12-02 - 10:29:16 PM GMT- IP address: 172.59.2.22

Document e-signed by Kevin L. Nault (klnault@santafenm.gov)
Signature Date: 2025-12-02 - 10:29:18 PM GMT - Time Source: server- IP address: 172.59.2.22

Agreement completed.
2025-12-02 - 10:29:18 PM GMT

Powered by Adobe Acrobat Sign

ACORD

CERTIFICATE OF LIABILITY INSURANCE

DATE (MM/DD/YYYY) 9/15/2025

THIS CERTIFICATE IS ISSUED AS A MATTER OF INFORMATION ONLY AND CONFERS NO RIGHTS UPON THE CERTIFICATE HOLDER. THIS CERTIFICATE DOES NOT AFFIRMATIVELY OR NEGATIVELY AMEND, EXTEND OR ALTER THE COVERAGE AFFORDED BY THE POLICIES BELOW. THIS CERTIFICATE OF INSURANCE DOES NOT CONSTITUTE A CONTRACT BETWEEN THE ISSUING INSURER(S), AUTHORIZED REPRESENTATIVE OR PRODUCER, AND THE CERTIFICATE HOLDER.

IMPORTANT: If the certificate holder is an ADDITIONAL INSURED, the policy(ies) must have ADDITIONAL INSURED provisions or be endorsed. If SUBROGATION IS WAIVED, subject to the terms and conditions of the policy, certain policies may require an endorsement. A statement on this certificate does not confer rights to the certificate holder in lieu of such endorsement(s).

PRODUCER License # 0757776 HUB International Insurance Services (SOW) 2905 Rodeo Park Drive East Building 6, Suite 100 Santa Fe, NM 87505	CONTACT NAME: PHONE (A/C, No, Ext): (505) 982-4296 FAX (A/C, No): (866) 621-0427 E-MAIL ADDRESS: julia.bland@hubinternational.com
INSURED JDR & Associates, LLC 274 Dinosaur Trail Santa Fe, NM 87508	INSURER(S) AFFORDING COVERAGE — NAIC # INSURER A : Selective Insurance Company of America — 12572 INSURER B : Builders Trust of New Mexico INSURER C : INSURER D : INSURER E : INSURER F :

COVERAGES **CERTIFICATE NUMBER:** **REVISION NUMBER:**

THIS IS TO CERTIFY THAT THE POLICIES OF INSURANCE LISTED BELOW HAVE BEEN ISSUED TO THE INSURED NAMED ABOVE FOR THE POLICY PERIOD INDICATED. NOTWITHSTANDING ANY REQUIREMENT, TERM OR CONDITION OF ANY CONTRACT OR OTHER DOCUMENT WITH RESPECT TO WHICH THIS CERTIFICATE MAY BE ISSUED OR MAY PERTAIN, THE INSURANCE AFFORDED BY THE POLICIES DESCRIBED HEREIN IS SUBJECT TO ALL THE TERMS, EXCLUSIONS AND CONDITIONS OF SUCH POLICIES. LIMITS SHOWN MAY HAVE BEEN REDUCED BY PAID CLAIMS.

INSR LTR	TYPE OF INSURANCE	ADDL INSD	SUBR WVD	POLICY NUMBER	POLICY EFF (MM/DD/YYYY)	POLICY EXP (MM/DD/YYYY)	LIMITS	
A	X COMMERCIAL GENERAL LIABILITY CLAIMS-MADE X OCCUR X PD Ded: $1,000 GEN'L AGGREGATE LIMIT APPLIES PER: POLICY X PRO-JECT LOC OTHER:	X	X	S 2567990	1/1/2025	1/1/2026	EACH OCCURRENCE DAMAGE TO RENTED PREMISES (Ea occurrence) MED EXP (Any one person) PERSONAL & ADV INJURY GENERAL AGGREGATE PRODUCTS - COMP/OP AGG	$ 1,000,000 $ 500,000 $ 15,000 $ 1,000,000 $ 3,000,000 $ 3,000,000
A	AUTOMOBILE LIABILITY X ANY AUTO OWNED AUTOS ONLY SCHEDULED AUTOS X HIRED AUTOS ONLY X NON-OWNED AUTOS ONLY	X	X	S 2567990	1/1/2025	1/1/2026	COMBINED SINGLE LIMIT (Ea accident) BODILY INJURY (Per person) BODILY INJURY (Per accident) PROPERTY DAMAGE (Per accident)	$ 1,000,000 $ $ $
A	X UMBRELLA LIAB X OCCUR EXCESS LIAB CLAIMS-MADE DED X RETENTION $ 0	X	X	S 2567990	1/1/2025	1/1/2026	EACH OCCURRENCE AGGREGATE	$ 3,000,000 $ 3,000,000
B	WORKERS COMPENSATION AND EMPLOYERS' LIABILITY ANY PROPRIETOR/PARTNER/EXECUTIVE OFFICER/MEMBER EXCLUDED? (Mandatory in NH) Y / N: Y If yes, describe under DESCRIPTION OF OPERATIONS below	N / A	X	6533	1/1/2025	1/1/2026	X PER STATUTE OTH-ER E.L. EACH ACCIDENT E.L. DISEASE - EA EMPLOYEE E.L. DISEASE - POLICY LIMIT	$ 2,000,000 $ 2,000,000 $ 2,000,000

DESCRIPTION OF OPERATIONS / LOCATIONS / VEHICLES (ACORD 101, Additional Remarks Schedule, may be attached if more space is required)

City of Santa Fe and owner are named as Additional Insured per Additional Insured Endorsement for ongoing and completed operation for General Liability as required by written contact. City of Santa Fe and owner are named Additional Insured on all policies except Workers' Compensation per written contact. A waiver of subrogation exists in favor of City of Santa Fe and owner as to the general liability, auto, umbrella, and workers' compensation policies per written contract. The general liability, auto, and umbrella policies are primary and non-contributory.

CERTIFICATE HOLDER

City of Santa Fe
PO Box 909
Santa Fe, NM 87504

CANCELLATION

SHOULD ANY OF THE ABOVE DESCRIBED POLICIES BE CANCELLED BEFORE THE EXPIRATION DATE THEREOF, NOTICE WILL BE DELIVERED IN ACCORDANCE WITH THE POLICY PROVISIONS.

AUTHORIZED REPRESENTATIVE



© 1988-2015 ACORD CORPORATION. All rights reserved.
The ACORD name and logo are registered marks of ACORD

From: DUTTON-LEYDA, TRAVIS K.
To: KAHAHANE, ELIZABETH L.
Cc: Purchasing DET
Subject: Re: Determination Request – Miscellaneous General Contracting work for the City of Santa Fe
Date: Wednesday, August 20, 2025 9:05:00 AM
Attachments: image001.png

Hi, this is construction.

Thank you.

Regards,

Travis Dutton-Leyda
Chief Procurement Officer
City of Santa Fe
200 Lincoln Avenue
Santa Fe, NM 87501
505-629-8351
tkduttonleyda@santafenm.gov

https://santafenm.gov/finance-2/purchasing-1

CITY OF SANTA FE
FACILITIES

Vision without action is merely a dream.
Action without vision passes the time.
Vision with action can change the world. ~ Joel A. Barker

> On Aug 20, 2025, at 8:56 AM, KAHAHANE, ELIZABETH L. <elkahahane@santafenm.gov> wrote:
>
> Aloha Purchasing!
>
> Facilities Division is requesting a SOW determination for the following:
>
> > The Contractor shall perform the following work in accordance with their Bid Pricing, attached hereto and made a part thereof, as Exhibit A:
> > 1. This work shall include Miscellaneous General Contracting work for the City

of Santa Fe.

2. The Contractor shall be required to provide On-Call General Contracting Services for any number of the activities listed under this Scope of Work upon the request of the City. Once a need is identified, the City will issue a written Task Order to the Contractor detailing the services required. Upon receiving the City's request for services, the Contractor shall promptly provide the City with an estimate (based upon the rates submitted in the Bid Form), cost summary, and project schedule required to complete the assignment or task. Project schedules, negotiated price, and completion dates shall be determined on a project-by-project basis and dependent upon the urgency of that task. The Contractor may be required to do some of the work in phases. The Contractor shall be required to provide the requested labor and all equipment and materials within one week of a request issuance of a Notice to Proceed unless otherwise arranged. The Contractor shall agree to provide required labor within 24 hours for emergency situations whenever possible.

3. The City of Santa Fe Public Works Facilities Division shall be able to utilize this On-Call Contract as needed and as funding is available. All other City of Santa Fe staff will only be authorized to utilize this On-Call Contract with prior, written approval of the scope of work, from the Facilities Division Director, before commencing any work applicable to this On-Call Contract.

4. Contractor is responsible for all required permits and licenses required to perform this work. Contractor shall be responsible for adherence to the Contract Documents, Construction Documents, Specifications, and approved directives.

5. Contractor shall be responsible for any applicable Local, County, State and Federal requirements and permits.

6. Contractor shall be responsible for verifications of all existing conditions, measurements, and dimensions for bidding. Contractor shall be responsible for all permits, fees, and State and/or City inspections associated with their work.

Please let me know if additional information is required.
Thank you!

Best,
Elizabeth "Lisa" Kahahane, CPO
Contract Administrator | Facilities Division | Public Works Dept.
Email: elkahahane@santafenm.gov
M: (505) 795-2439
O: (505) 955-5934

CITY OF SANTA FE
FACILITIES

This e-mail and any attachments may contain confidential information and/or

information protected by intellectual property rights for the exclusive attention of the intended addressees. If you have received this transmission in error, please immediately notify the sender by return e-mail and delete this message and its attachments. Unauthorized use, copying or further full or partial distribution of this e-mail or its contents is prohibited.

Services Offered to the City of Santa Fe (FY26)

Approved:
These services have been approved by the New Mexico Council for Purchasing from Persons with Disabilities and are available through Horizons of New Mexico.

- ADA Accessibility Consulting Services
- Auctioneering Services
- Bulk Mailing and Sorting
- Call Center Services
- Computer Refurbishing
- Courier Services
- Decontamination, Sanitation and Sterilization Services
- Debris Removal
- Document Imaging
- Document Shredding
- Envelope Stuffing
- General Labor
- Hard Drive Destruction
- Janitorial and Housekeeping Services – Including Carpet Cleaning & Floor Care
- Landscape Irrigation
- Landscaping
- Mailing Services
- Management of an Assistive Technology Reuse and Recycling Program
- Medical Waste Disposal
- Meeting Minute Preparation Services
- Pest Control and Extermination Services
- Printing Services
- Rest Area Maintenance
- Screen Printing
- Snow Removal
- Temporary Staffing Services
- Yard, Grounds, and Lawn Maintenance

Permissive:
The services have been approved by the New Mexico Council for Purchasing from Persons with Disabilities as permissible for sale under the State Use Act through Horizons of New Mexico. While the Council recognizes that certain Horizons of New Mexico members are capable of performing the services listed below, said services are considered permissive and excluded from the mandatory aspect of the State Use Program. Any procurement of the below services through Horizons of New Mexico is at the discretion of the purchasing agent and will be considered by the Council on a case-by-case basis.

- Graphic Design
- Graphic Design - Logo Design
- IT – Enterprise Application
- IT – IV & V
- IT Network and Database Management
- IT Support
- IT Security Services
- IT – Web Design
- IT – Web Programmer
- Marketing
- Social Media Marketing

For the complete State Use service list, please go to: http://horizonsofnewmexico.org/services.html

GB Packet_JDR & Assoc._On-Call GC ITB 25163

Final Audit Report 2025-12-08

Created:	2025-12-05
By:	Elizabeth Kahahane (elkahahane@santafenm.gov)
Status:	Signed
Transaction ID:	CBJCHBCAABAAgXj_Zt1964A4_kJSxvIPL2sb6VAh_ene

"GB Packet_JDR & Assoc._On-Call GC ITB 25163" History

Document created by Elizabeth Kahahane (elkahahane@santafenm.gov)
2025-12-05 - 6:25:41 PM GMT- IP address: 63.232.20.2

Document emailed to CARYN GROSSE (clgrosse@santafenm.gov) for signature
2025-12-05 - 6:32:28 PM GMT

Email viewed by CARYN GROSSE (clgrosse@santafenm.gov)
2025-12-05 - 6:47:31 PM GMT- IP address: 104.47.64.254

Document e-signed by CARYN GROSSE (clgrosse@santafenm.gov)
Signature Date: 2025-12-05 - 6:47:45 PM GMT - Time Source: server- IP address: 63.232.20.2

Document emailed to Timothy Farrell (tgfarrell@santafenm.gov) for signature
2025-12-05 - 6:47:47 PM GMT

Email viewed by Timothy Farrell (tgfarrell@santafenm.gov)
2025-12-05 - 6:55:56 PM GMT- IP address: 104.47.64.254

Document e-signed by Timothy Farrell (tgfarrell@santafenm.gov)
Signature Date: 2025-12-05 - 6:56:50 PM GMT - Time Source: server- IP address: 174.56.2.34

Document emailed to JOHN BURNETT (jsburnett@santafenm.gov) for signature
2025-12-05 - 6:56:52 PM GMT

Email viewed by JOHN BURNETT (jsburnett@santafenm.gov)
2025-12-08 - 2:51:26 PM GMT- IP address: 71.228.98.124

Document e-signed by JOHN BURNETT (jsburnett@santafenm.gov)
Signature Date: 2025-12-08 - 2:51:38 PM GMT - Time Source: server- IP address: 71.228.98.124

Powered by Adobe Acrobat Sign

Agreement completed.

2025-12-08 - 2:51:38 PM GMT

GB_Packet_JDR_&_Assoc._On-Call_GC_ITB_25163_v3.0 (1)

Final Audit Report 2025-12-24

Created:	2025-12-19
By:	RACHEL GABALDON (rdgabaldon@santafenm.gov)
Status:	Signed
Transaction ID:	CBJCHBCAABAA-fyJ0L2CBa9j0spreX1bm8bm0OguYJUV

"GB_Packet_JDR_&_Assoc._On-Call_GC_ITB_25163_v3.0 (1)" History

Document created by RACHEL GABALDON (rdgabaldon@santafenm.gov)
2025-12-19 - 5:10:37 PM GMT- IP address: 63.232.20.2

Document emailed to ajhopkins@santafenm.gov ajhopkins@santafenm.gov (ajhopkins@santafenm.gov) for signature
2025-12-19 - 5:12:36 PM GMT

Email viewed by ajhopkins@santafenm.gov ajhopkins@santafenm.gov (ajhopkins@santafenm.gov)
2025-12-19 - 6:11:23 PM GMT- IP address: 104.47.65.254

Document e-signed by ajhopkins@santafenm.gov ajhopkins@santafenm.gov (ajhopkins@santafenm.gov)
Signature Date: 2025-12-19 - 6:11:46 PM GMT - Time Source: server- IP address: 63.232.20.2

Document sent to JoAnn Lovato (jdlovato@santafenm.gov) and Travis Dutton-Leyda (tkduttonleyda@santafenm.gov) for signature. One of them to sign
2025-12-19 - 6:11:49 PM GMT

Email viewed by Travis Dutton-Leyda (tkduttonleyda@santafenm.gov)
2025-12-19 - 6:24:54 PM GMT- IP address: 63.232.20.2

Email viewed by Travis Dutton-Leyda (tkduttonleyda@santafenm.gov)
2025-12-22 - 5:20:50 AM GMT- IP address: 146.75.203.1

Email viewed by JoAnn Lovato (jdlovato@santafenm.gov)
2025-12-23 - 10:52:25 PM GMT- IP address: 63.232.20.2

Document e-signed by JoAnn Lovato (jdlovato@santafenm.gov)
Signature Date: 2025-12-23 - 10:53:08 PM GMT - Time Source: server- IP address: 63.232.20.2

Powered by Adobe Acrobat Sign

Document emailed to EMILY OSTER (ekoster@santafenm.gov) for signature

2025-12-23 - 10:53:10 PM GMT

Email viewed by EMILY OSTER (ekoster@santafenm.gov)

2025-12-24 - 4:46:39 PM GMT- IP address: 174.218.241.65

Document e-signed by EMILY OSTER (ekoster@santafenm.gov)

Signature Date: 2025-12-24 - 4:47:27 PM GMT - Time Source: server- IP address: 174.218.241.65

Agreement completed.

2025-12-24 - 4:47:27 PM GMT

ACORD

CERTIFICATE OF LIABILITY INSURANCE

DATE (MM/DD/YYYY) 12/18/2025

THIS CERTIFICATE IS ISSUED AS A MATTER OF INFORMATION ONLY AND CONFERS NO RIGHTS UPON THE CERTIFICATE HOLDER. THIS CERTIFICATE DOES NOT AFFIRMATIVELY OR NEGATIVELY AMEND, EXTEND OR ALTER THE COVERAGE AFFORDED BY THE POLICIES BELOW. THIS CERTIFICATE OF INSURANCE DOES NOT CONSTITUTE A CONTRACT BETWEEN THE ISSUING INSURER(S), AUTHORIZED REPRESENTATIVE OR PRODUCER, AND THE CERTIFICATE HOLDER.

IMPORTANT: If the certificate holder is an ADDITIONAL INSURED, the policy(ies) must have ADDITIONAL INSURED provisions or be endorsed. If SUBROGATION IS WAIVED, subject to the terms and conditions of the policy, certain policies may require an endorsement. A statement on this certificate does not confer rights to the certificate holder in lieu of such endorsement(s).

PRODUCER License # 0757776 HUB International Insurance Services (SOW) 2905 Rodeo Park Drive East Building 6, Suite 100 Santa Fe, NM 87505	CONTACT NAME: Michelle Vialpando PHONE (A/C, No, Ext): (505) 992-1873 FAX (A/C, No): (866) 487-3972 E-MAIL ADDRESS: michelle.vialpando@hubinternational.com
INSURED JDR & Associates, LLC 274 Dinosaur Trail Santa Fe, NM 87508	INSURER(S) AFFORDING COVERAGE — NAIC # INSURER A : Selective Insurance Company of America — 12572 INSURER B : Builders Trust of New Mexico INSURER C : INSURER D : INSURER E : INSURER F :

COVERAGES **CERTIFICATE NUMBER:** **REVISION NUMBER:**

THIS IS TO CERTIFY THAT THE POLICIES OF INSURANCE LISTED BELOW HAVE BEEN ISSUED TO THE INSURED NAMED ABOVE FOR THE POLICY PERIOD INDICATED. NOTWITHSTANDING ANY REQUIREMENT, TERM OR CONDITION OF ANY CONTRACT OR OTHER DOCUMENT WITH RESPECT TO WHICH THIS CERTIFICATE MAY BE ISSUED OR MAY PERTAIN, THE INSURANCE AFFORDED BY THE POLICIES DESCRIBED HEREIN IS SUBJECT TO ALL THE TERMS, EXCLUSIONS AND CONDITIONS OF SUCH POLICIES. LIMITS SHOWN MAY HAVE BEEN REDUCED BY PAID CLAIMS.

INSR LTR	TYPE OF INSURANCE	ADDL INSD	SUBR WVD	POLICY NUMBER	POLICY EFF (MM/DD/YYYY)	POLICY EXP (MM/DD/YYYY)	LIMITS	
A	X COMMERCIAL GENERAL LIABILITY CLAIMS-MADE [X] OCCUR X PD Ded: $1,000 GEN'L AGGREGATE LIMIT APPLIES PER: POLICY [X] PRO-JECT [ ] LOC OTHER:	X	X	S 2567990	1/1/2026	1/1/2027	EACH OCCURRENCE DAMAGE TO RENTED PREMISES (Ea occurrence) MED EXP (Any one person) PERSONAL & ADV INJURY GENERAL AGGREGATE PRODUCTS - COMP/OP AGG	$ 1,000,000 $ 500,000 $ 15,000 $ 1,000,000 $ 3,000,000 $ 3,000,000
A	AUTOMOBILE LIABILITY X ANY AUTO OWNED AUTOS ONLY [ ] SCHEDULED AUTOS X HIRED AUTOS ONLY [X] NON-OWNED AUTOS ONLY	X	X	S 2567990	1/1/2026	1/1/2027	COMBINED SINGLE LIMIT (Ea accident) BODILY INJURY (Per person) BODILY INJURY (Per accident) PROPERTY DAMAGE (Per accident)	$ 1,000,000 $ $ $
A	X UMBRELLA LIAB [X] OCCUR EXCESS LIAB [ ] CLAIMS-MADE DED [X] RETENTION $ 0	X	X	S 2567990	1/1/2026	1/1/2027	EACH OCCURRENCE AGGREGATE	$ 3,000,000 $ 3,000,000
B	WORKERS COMPENSATION AND EMPLOYERS' LIABILITY ANY PROPRIETOR/PARTNER/EXECUTIVE OFFICER/MEMBER EXCLUDED? (Mandatory in NH) Y/N [Y] If yes, describe under DESCRIPTION OF OPERATIONS below	N / A	X	6533	1/1/2026	1/1/2027	X PER STATUTE [ ] OTH-ER E.L. EACH ACCIDENT E.L. DISEASE - EA EMPLOYEE E.L. DISEASE - POLICY LIMIT	$ 2,000,000 $ 2,000,000 $ 2,000,000

DESCRIPTION OF OPERATIONS / LOCATIONS / VEHICLES (ACORD 101, Additional Remarks Schedule, may be attached if more space is required)

City of Santa Fe and owner are named as Additional Insured per Additional Insured Endorsement for ongoing and completed operation for General Liability as required by written contact. City of Santa Fe and owner are named Additional Insured on all policies except Workers' Compensation per written contact. A waiver of subrogation exists in favor of City of Santa Fe and owner as to the general liability, auto, umbrella, and workers' compensation policies per written contract. The general liability, auto, and umbrella policies are primary and non-contributory.

CERTIFICATE HOLDER

City of Santa Fe
PO Box 909
Santa Fe, NM 87504

CANCELLATION

SHOULD ANY OF THE ABOVE DESCRIBED POLICIES BE CANCELLED BEFORE THE EXPIRATION DATE THEREOF, NOTICE WILL BE DELIVERED IN ACCORDANCE WITH THE POLICY PROVISIONS.

AUTHORIZED REPRESENTATIVE

© 1988-2015 ACORD CORPORATION. All rights reserved.
The ACORD name and logo are registered marks of ACORD

BUILDERS TRUST®
OF NEW MEXICO

WAIVER OF SUBROGATION

Insured Name: JDR & Associates LLC
Insured Policy Number: WC100-0006533-2026A

Builders Trust of New Mexico waives any right of recovery of subrogation against the certificate holder named on this certificate of insurance, but only to the extent that the employers to whom we provide coverage performs work under a written contract with the certificate holder that requires this waiver.

Name of Person	Name of Organization
	Blanket Waiver of Subrogation

Date: 12/5/2025

Countersigned by Randy L. Akin

Agency Number: 13 – 15
Agency Name: HUB International Insurance Services, Inc. (SF)

(505) 345-3477 ■ 1-800-640-3369 ■ FAX (505) 344-7245
5931 OFFICE BOULEVARD, NE SUITE 3 ALBUQUERQUE, NM 87109 ■ P.O. BOX 91330 ALBUQUERQUE, NM 87199-1330
www.builderstrust.com

CITY OF SANTA FE

Date: December 17, 2025

To: Governing Body

From: Caryn Grosse, PMP, Public Works Project Manager III

Via: Sam Burnett, Interim Public Works Department Director JOHN BURNETT (Dec 22, 2025 08:28:04 MST)
Tim Farrel, Interim Facilities Division Director Timothy Farrell

Subject: On-Call City-Wide Elevator Services

Vendor Name: US Electrical Corp.

Vendor Number: 10782

ACTION:
Request for Approval of a General Services Contract with US Electrical Corp. in the Total Amount of $540,938 Including NMGRT for City-Wide Elevator Services with a Two-Year Term. (Caryn Grosse, PMP, Public Works Project Manager III, clgrosse@santafenm.gov)

CONTRACT NUMBER:
The Munis Contract Number is 3260244.

BACKGROUND AND SUMMARY:
The Public Works Department Facilities Division uses on-call services to augment the skills, licensure, and capacity of staff to address facility issues and emergencies in a timely, safe, and compliant manner. The Facilities Division typically maintains on-call contracts for general contracting, mechanical, electrical, plumbing, roofing, remediation, and landscaping services.

This contract will provide for on-call elevator services including but not limited to monthly inspections and maintenance, modernization, maintenance, and repairs of 15 elevators at various City facilities as needed.

On-call contracts are not a guarantee of payment. These contracts are only used, and purchase orders issued, as needs arise and funding is available. The $540,937.50 (including 8.1875% NMGRT) maximum for this contract is based on the historical and anticipated needs across the City over the next two years.

ATTACHMENTS:
General Services Contract
Proposal
Statewide Price Agreement
Certificate of Insurance
Horizons Service List
CPO Determination

PRIOR APPROVALS AND SUPPORTING INFORMATION:

FUNDING SOURCE:
Funding will be provided on a project-by-project basis.
Fund Name/Number: various
Munis Org Name/Number: various
Munis Object Name/Number: various

Budget Officer/Designee: Andy Hopkins Date: 01/05/2026
Budget Officer Comment/Exceptions: _____

PROCUREMENT METHOD:
The procurement method is NMSA 1978, Section 13-1-129, Statewide Price Agreement No. 40-00000-24-00074, which expires on June 19, 2026.

Chief Procurement Officer (CPO)/Designee: JoAnn Lovato Montaño Date: 01/05/2026
CPO Comment/Exceptions: _____

ASSOCIATED APPROVALS:

IT Components included? ☐ Yes | ☒ No
Approval: _____ Title: _____ Date: _____
Comment/Exceptions: _____

Treasury/Point of Sale Components included? ☐ Yes | ☒ No
Approval: _____ Title: _____ Date: _____
Comment/Exceptions: _____

Vehicles included? ☐ Yes | ☒ No
Approval: _____ Title: _____ Date: _____
Comment/Exceptions: _____

Construction to City Facilities, Furniture, and/or Fixtures, included? ☐ Yes | ☒ No
Approval: _____ Title: _____ Date: _____
Comment/Exceptions: _____

Is this an externally funded purchase? ☐ Yes | ☒ No
If yes, what is the issuing agency: _____
Approval: _____ Title: _____ Date: _____
Comment/Exceptions: _____

Capital Asset or Project? ☐ Yes | ☒ No
Project Ledger Number _____
Approval: _____ Title: _____ Date: _____
Comment/Exceptions: _____

Item No.: _____
Munis Contract No.: 3260244
SWPA No.: 40-00000-24-00074

CITY OF SANTA FE
GENERAL SERVICES CONTRACT

ON-CALL PRICE AGREEMENT

City-Wide Miscellaneous Elevator Services

THIS CONTRACT is made and entered into by and between the City of Santa Fe, herein after referred to as the "City," and **US Electrical Corp.** herein after referred to as the "Contractor."

IT IS MUTUALLY AGREED BETWEEN THE PARTIES:

1. Definitions

A. "Products and Services Schedule" refers to the complete list of products and services offered under this Contract and the price for each. Product and service descriptions may be amended with the prior approval of the Project Manager. New products and services shall not be added to the Products and Services Schedule.

B. "Business Hours" means 8:00 a.m. to 5:00 p.m. Mountain Time.

C. "Fiscal Year" means the twelve-month period beginning on July 1 and ending on June 30 of the following calendar year.

D. "Fiscal Year Quarters" means the four three-month periods within the City's fiscal year, defined as follows: Quarter 1 is July 1 through September 30; Quarter 2 is October 1 through December 31; Quarter 3 is January 1 through March 31; and Quarter 4 is April 1 through June 30.

2. Scope of Work

The Contractor shall perform the following work which shall include but is not limited to:

The Contractor shall provide Miscellaneous On-Call Elevator services including but not limited to modernizing, maintaining, installing, assembling, or replacing, elevator equipment specific to the elevator system. Once a need is identified, the City's Facilities Director, Project Manager, or Project Administrator ("Project Manager") will issue a written Task Order to the Contractor detailing the services required. Any Task Order not issued by a Project Manager from the City's Facilities Division is only valid if the Facilities Director's written approval is attached to the Task Order. Contractor shall be responsible to inquire which City division a Project Manager is from if the Project Manager is unknown to Contractor.

Upon receiving the City's request for services, the Contractor shall promptly provide the Project Manager with an estimate based upon the rates in their contract, cost summary, and project schedule required to complete the assignment or task. Project schedules, negotiated prices, and completion dates shall be determined on a project-by-project basis and dependent upon the urgency of that task. The Contractor may be required to do some of the work in phases. The Contractor shall be required to provide the requested labor and all equipment and materials within one week of a request issuance of a Notice to Proceed unless otherwise arranged. The Contractor shall agree to provide required labor within 24 hours for emergency situations whenever possible. The Contractor shall not be authorized to commence any work unless and until Contractor receives a Notice to Proceed from the Project Manager. The parties agree that the City is not responsible to pay for any parts purchased or work done without a Notice to Proceed.

Contractor shall be responsible for any applicable Local, County, State, and Federal requirements and permits.

This may include, but is not limited to, the Contractor/Consultant certification by the National Association of Elevator Contractors (NAEC) as a Certified Elevator Technician (CET), a Certified Accessibility and Private Residence Lift Technician (CAT), or a Qualified Elevator Inspector (QEI). The responsibility shall include, but is not limited to, adherence to the International Building Code (IBC), National Electrical Code (NEC) Article 620, ASME A17-Elevator Safety Standards (current adopted year), NFPA 101-Life Safety Code (NFP1), and Local Building Regulations including but not limited to the New Mexico Commercial Building Code (current adopted year), New Mexico Residential Building Code (current adopted year), Santa Fe Green Building Code, New Mexico Existing Building Code (current adopted year) for all projects.

Contractor shall be responsible for adherence to the Contract Documents, Construction Documents, Specifications, and approved directives.

3. Compensation

A. Payment. The City shall compensate the Contractor based on the itemized amounts and/or rates specified in State of New Mexico Master Agreement SPA 40-00000-24-00074.

For the services described in the scope of work, the City agrees to pay the Contractor:	$ 500,000.00
The services in the contract include NMGRT (at 8.1875%) equaling:	+ $ 40,937.50
The total compensation for the contract, including NMGRT, is:	= $ 540,937.50

B. The compensation represents a maximum amount. The Contractor must notify the City when the Services provided under this Contract approach 90% of compensation total. Services rendered beyond the maximum compensation amount will not be reimbursed unless the Contract is amended in writing prior to the provision of such services.

C. Invoicing and Payment Terms Payment will be made upon the City's acceptance of deliverables and receipt of a detailed, certified invoice from the Contractor. Payments will be sent to the Contractor's designated address. The City shall issue payment in accordance with the timelines required by law. Invoices must be submitted no later than fifteen (15) days after the Contract's termination. Late invoices will not be processed or paid.

D. Extended Payment Terms for Grant-Funded Contracts For grant-funded agreements, the City may issue payment within forty-five (45) days following submission of an undisputed payment request.

4. Term

A. THIS CONTRACT SHALL NOT BECOME EFFECTIVE UNTIL APPROVED BY THE CITY. This Contract shall terminate two (2) years from the date of final signature unless terminated pursuant to Paragraph 6 (Termination) or Paragraph 16 (Appropriations).

B. Term of Statewide Price Agreement No. 40-00000-24-00074 states: The term of this agreement shall be for one (1) year from date of award with the option to extend for a period (s) of two (2) additional years, on a year-by-year basis, by mutual agreement of all parties and approval of the New Mexico State Purchasing Director at the same price, terms and conditions. This agreement shall not exceed three (3) years.

5. Default and Force Majeure

The City reserves the right to cancel all, or any part of any orders placed under this contract without cost to the City, if the Contractor fails to meet the provisions of this contract and, except as otherwise provided herein, to hold the Contractor liable for any excess cost occasioned by the City due to the Contractor's default. The Contractor shall not be liable for any excess costs if failure to perform the order arises out of causes beyond the control and without the fault or negligence of the Contractor; such causes include, but are not restricted to, acts of God or the public enemy, acts of the State or Federal Government, fires, floods, epidemics, quarantine restrictions, strikes, freight embargoes, unusually severe weather and defaults of sub-contractors due to any of the above, unless the City shall determine that the supplies or services to be furnished by the sub-contractor were obtainable from other sources in sufficient time to permit the Contractor to meet the required delivery scheduled. The rights and remedies of the City provided in this paragraph shall not be exclusive and are in addition to any other rights now being provided by law or under this contract.

6. Termination

A. Grounds. The City may terminate this Contract for convenience or cause. For contracts within their authority, the City Manager or their designee is authorized to provide the notice of termination, otherwise such notice of termination shall be provided by the Mayor, or their designee as authorized by the Governing Body. The Contractor may only terminate this Contract based upon the City's uncured, material breach of this Contract.

B. Notice: City Opportunity to Cure.

i. The City shall give the Contractor written notice of termination at least thirty (30) days prior to the intended date of termination.

ii. Contractor shall give City written notice of termination at least thirty (30) days prior to the intended date of termination, which notice shall (i) identify all the City's material breaches of this Contract upon which the termination is based and (ii) state what the City must do to cure such material breaches. Contractor's notice of termination shall only be effective (i) if the City does not cure all material breaches within the thirty (30) day notice period or (ii) in the case of material breaches that cannot be cured within thirty (30) days, the City does not, within the thirty (30) day notice period, notify the Contractor of its intent to cure and begin with due diligence to cure the material breach.

iii. Notwithstanding the foregoing, this Contract may be terminated immediately upon written notice to the Contractor (i) if the Contractor becomes unable to perform the services contracted for, as determined by the City; (ii) if, during the term of this Contract, the Contractor is suspended or debarred by the City; or (iii) the Contract is terminated pursuant to Paragraph 17, "Appropriations", of this Contract.

C. Liability. Except as otherwise expressly allowed or provided under this Contract, the City's sole liability upon termination shall be to pay for acceptable work performed prior to the Contractor's receipt or issuance of a notice of termination; provided, however, that a notice of termination shall not nullify or otherwise affect either party's liability for pre-termination defaults under or breaches of this Contract. The Contractor shall submit an invoice for such work within thirty (30) days of receiving or sending the notice of termination. THIS PROVISION IS NOT EXCLUSIVE AND DOES NOT WAIVE THE CITY'S OTHER LEGAL RIGHTS AND REMEDIES CAUSED BY THE CONTRACTOR'S DEFAULT/BREACH OF THIS CONTRACT.

7. Amendment

A. This Contract shall not be altered, changed, or amended except by instrument in writing executed by the parties hereto and all other required signatories.

B. If the City proposes an amendment to the Contract to unilaterally reduce funding due to budget or other considerations, the Contractor shall, within thirty (30) days of receipt of the proposed Amendment, have the option to terminate the Contract, pursuant to the termination provisions as set forth in Paragraph 7 herein, or to agree to the reduced funding.

8. Status of Contractor

The Contractor, and Contractor's agents and employees, are independent Contractors for the City and are not employees of the City. The Contractor, and Contractor's agents and employees, shall not accrue leave, retirement, insurance, bonding, use of City vehicles, or any other benefits afforded to employees of the City because of this Contract. The Contractor acknowledges that all sums received hereunder are personally reportable by the Contractor for income tax purposes, including without limitation, self-

employment tax and business income tax. The Contractor agrees not to purport to bind the City unless the Contractor has written authority to do so, and then only within the strict limits of that authority.

9. Assignment

The Contractor shall not assign or transfer any interest in this Contract or assign any claims for money due or to become due under this Contract without the prior written approval of the City.

10. Subcontracting

The Contractor shall not subcontract any portion of the services to be performed under this Contract without the prior written approval of the City. No such subcontract shall relieve the primary Contractor from its obligations and liabilities under this Contract, nor shall any subcontract obligate direct payment from the City.

11. Non-Collusion

In signing this Contract, the Contractor certifies the Contractor has not, either directly or indirectly, entered into action in restraint of free competitive bidding in connection with this offer submitted to the City.

12. Inspection of Plant

The City may inspect, at any reasonable time during Contractor's regular business hours and upon prior written notice, the Contractor's plant or place of business, or any subcontractor's plant or place of business, which is related to the performance of this contract.

13. Commercial Warranty

The Contractor agrees that the tangible personal property or services furnished under this Contract shall be covered by the most favorable commercial warranties the Contractor gives to any customer for such tangible personal property or services, and that the rights and remedies provided herein shall extend to the City and are in addition to and do not limit any rights afforded to the City by any other clause of this order. The contractor agrees not to disclaim warranties of fitness for a particular purpose or merchantability.

14. Condition of Proposed Items

Where tangible personal property is a part of this Contract, all proposed items are to be NEW and of most current production, unless otherwise specified.

15. Records and Audit

During the term of this Contract and for three years thereafter, the Contractor shall maintain detailed records pertaining to the services rendered and products delivered. These records shall be subject to inspection by the City, the State Auditor and other appropriate state and federal authorities. The City

shall have the right to audit billings both before and after payment. Payment under this Contract shall not foreclose the right of the City to recover excessive or illegal payments.

16. Appropriations

The terms of this Contract, and any orders placed under it, are contingent upon sufficient appropriations and authorization being made by the Governing Body for the performance of this Contract. If sufficient appropriations and authorization are not made by the Governing Body, this Contract, and any orders placed under it, shall terminate upon written notice being given by the City to the Contractor. The City's decision as to whether sufficient appropriations are available shall be accepted by the Contractor and shall be final. If the City proposes an amendment to the Contract to unilaterally reduce funding, the Contractor shall have the option to terminate the Contract or to agree to the reduced funding, within thirty (30) days of receipt of the proposed amendment.

17. Release

The Contractor, upon final payment of the amount due under this Contract, releases the City, its officers, and employees, from all liabilities, claims and obligations whatsoever arising from or under this Contract. The Contractor agrees not to purport to bind the City, unless the Contractor has express written authority to do so, and then only within the strict limits of that authority.

18. Confidentiality

Any confidential information provided to or developed by the Contractor in the performance of this Contract shall be kept confidential and shall not be made available to any individual or organization by the Contractor without prior written approval by the City.

19. Conflict of Interest

A. The Contractor represents and warrants that it presently has no interest and, during the term of this Contract, shall not acquire any interest, direct or indirect, which would conflict in any manner or degree with the performance or services required under the Contract. The Contractor shall comply with any applicable provisions of the New Mexico Governmental Conduct Act and the New Mexico Financial Disclosures Act.

B. The Contractor further represents and warrants that it has complied with, and, during the term of this Contract, will continue to comply with, and that this Contract complies with all applicable provisions of the Governmental Conduct Act, NMSA 1978, Chapter 10, Article 16.

C. Contractor's representations and warranties in Paragraphs A and B of this Paragraph are material representations of fact upon which the City relied when this Contract was entered into by the parties. Contractor shall provide immediate written notice to the City if, at any time during the term of this Contract, Contractor learns that Contractor's representations and warranties in Paragraphs A and B of this Paragraph 20 were erroneous on the effective date of this Contract or have become erroneous by reason of new or changed circumstances. If it is later determined that

Contractor's representations and warranties in Paragraphs A and B of this Paragraph 20 were erroneous on the effective date of this Contract or have become erroneous by reason of new or changed circumstances, in addition to other remedies available to the City and notwithstanding anything in the Contract to the contrary, the City may immediately terminate the Contract.

All terms defined in the Governmental Conduct Act have the same meaning in this section.

20. Approval of Contractor Representatives

The City reserves the right to require a change in the Contractor's assigned representatives if they are not adequately serving the City's needs.

21. Scope of Contract; Merger

This Contract incorporates all the agreements, covenants, and understandings between the parties hereto concerning the subject matter hereof, and all such covenants, agreements, and understandings have been merged into this written contract.

This Contract is issued against the state or agency Master Agreement, established, and maintained by the New Mexico General Services Department, Statewide Price Agreement 40-00000-24-00074 for Electrical Services On-Call, and through this language hereby incorporates this Contract by reference and is included in the order of precedence.

22. Notice

The Procurement Code, NMSA 1978, Sections 13-1-28 through 13-1-199, imposes civil and criminal penalties for its violation. In addition, the New Mexico criminal statutes impose felony penalties for bribes, gratuities, and kickbacks.

23. Equal Opportunity Compliance

The Contractor agrees to abide by all federal and state laws, and local Ordinances, pertaining to equal employment opportunity. In accordance with all such laws, rules, and regulations, the Contractor agrees to assure that no person in the United States shall on the grounds of race, religion, color, national origin, ancestry, sex, age, physical or mental handicap, or serious medical condition, spousal affiliation, sexual orientation or gender identity, be excluded from employment with or participation in, be denied the benefits of, or be otherwise subjected to discrimination under any program or activity performed under this Contract. If Contractor is found not to be in compliance with these requirements during the life of this Contract, Contractor agrees to take appropriate steps to correct these deficiencies.

24. Indemnification

The Contractor shall hold the City and its employees harmless and shall indemnify the City and its employees against any and all claims, suits, actions, liabilities and costs of any kind, including attorney's fees for personal injury or damage to property arising from the acts or omissions of the Contractor, its agents, officers, employees or subcontractors. The Contractor shall not be liable for any

injury or damage as a result of any negligent act or omission committed by the City, its officers or employees.

25. New Mexico Tort Claims Act

Any liability incurred by the City of Santa Fe in connection with this Contract is subject to the immunities and limitations of the New Mexico Tort Claims Act, NMSA 1978, Section 41-4-1, et. seq., as amended. The City and its "public employees" as defined in the New Mexico Tort Claims Act, do not waive sovereign immunity, do not waive any defense and do not waive any limitation of liability pursuant to law. No provision in this Contract modifies or waives any provision of the New Mexico Tort Claims Act.

26. Applicable Law

The laws of the State of New Mexico shall govern this Contract, without giving effect to its choice of law provisions. Venue shall be proper only in a New Mexico court of competent jurisdiction in accordance with NMSA 1978, Section 38-3-2. By execution of this Contract, Contractor acknowledges and agrees to the jurisdiction of the courts of the State of New Mexico over any and all lawsuits arising under or out of any term of this Contract.

27. Limitation of Liability

The Contractor's liability to the City, for any cause whatsoever shall be limited to the purchase price paid to the Contractor for the products and services that are the subject of the City's, claim. The foregoing limitation does not apply to paragraph 25 of this Contract or to damages resulting from personal injury caused by the Contractor's negligence.

28. Incorporation by Reference and Precedence

If this Contract has been procured pursuant to a request for proposals, this Contract is derived from (1) the request for proposal, (including any written clarifications to the request for proposals and any City response to questions); (2) the Contractor's best and final offer; and (3) the Contractor's response to the request for proposals.

In the event of a dispute under this Contract, applicable documents will be referred to for the purpose of clarification or for additional detail in the following order of precedence: (1) amendments to the Contract in reverse chronological order; (2) the Contract, including the scope of work and all terms and conditions thereof; (3) the request for proposals, including attachments thereto and written responses to questions and written clarifications; (4) the Contractor's best and final offer if such has been made and accepted by the City; and (5) the Contractor's response to the request for proposals.

29. Workers' Compensation

The Contractor agrees to comply with state laws and rules applicable to workers' compensation benefits for its employees. If the Contractor fails to comply with the Workers' Compensation Act and applicable rules when required to do so, this Contract may be terminated by the City.

30. Inspection

If this contract is for the purchase of tangible personal property (goods), final inspection and acceptance shall be made at Destination. Tangible personal property rejected at Destination for non-conformance to specifications shall be removed at Contractor's risk and expense promptly after notice of rejection and shall not be allowable as billable items for payment.

31. Inspection of Services

If this contract is for the purchase of services, the following terms shall apply.

A. Services, as used in this Article, include services performed, workmanship, and material furnished or utilized in the performance of services.

B. The Contractor shall provide and maintain an inspection system acceptable to the City covering the services under this Contract. Complete records of all inspection work performed by the Contractor shall sent to the City promptly upon completion as well as maintained by Contractor and made available to the City upon request. The City has the right to inspect and test all services contemplated under this Contract to the extent practicable at all times and places during the term of the Contract. The City shall perform inspections and tests in a manner that will not unduly delay or interfere with Contractor's performance.

C. If the City performs inspections or tests on the premises of the Contractor or a subcontractor, the Contractor shall furnish, and shall require subcontractors to furnish, at no increase in contract price, all reasonable facilities and assistance for the safe and convenient performance of such inspections or tests.

D. If any part of the services do not conform with the requirements of this Contract, the City may require the Contractor to re-perform the services in conformity with the requirements of this Contract at no increase in contract amount. When the defects in services cannot be corrected by re-performance, the City may:

i. require the Contractor to take necessary action(s) to ensure that future performance conforms to the requirements of this Contract; and
ii. reduce the contract price to reflect the reduced value of the services performed.

E. If the Contractor fails to promptly re-perform the services or to take the necessary action(s) to ensure future performance in conformity with the requirements of this Contract, the City may:

i. by contract or otherwise, perform the services and charge to the Contractor any cost incurred by the City that is directly related to the performance of such service; or
ii. terminate the contract for default.

32. Insurance

If the services contemplated under this Contract will be performed on or in City facilities or property, Contractor shall maintain in force during the entire term of this Contract, the following insurance coverage(s), naming the City as additional insured.

A. **Commercial General Liability** insurance shall be written on an occurrence basis and be a broad as ISO Form CG 00 01 with limits not less than $2,000,000 per occurrence and $2,000,000 in the aggregate for claims against bodily injury, personal and advertising injury, and property damage. Said policy shall include broad form Contractual Liability coverage and be endorsed to name the City of Santa Fe their officials, officers, employees, and agents as additional insureds.

B. **Business Automobile Liability** insurance for all owned, non-owned automobiles, with a combined single limit not less than $1,000,000 per accident.

C. **Broader Coverage and Limits**. The insurance requirements under this Contract shall be the greater of (1) the minimum coverage and limits specified in this Contract, or (2) the broader coverage and maximum limits of coverage of any insurance policy or proceeds available to the Named Insured. It is agreed that these insurance requirements shall not in any way act to reduce coverage that is broader or that includes higher limits than the minimums required herein. No representation is made that the minimum insurance requirements of this Contract are sufficient to cover the obligations of Contractor hereunder.

D. Contractor shall maintain the above insurance for the term of this Contract and name the City as an additional insured and provide for 30 days cancellation notice on any Certificate of Insurance form furnished by Contractor. Such certificate shall also specifically state the coverage provided under the policy is primary over any other valid and collectible insurance and provide a waiver of subrogation.

33. Impracticality of Performance

A party shall be excused from performance under this Contract for any period that the party is prevented from performing as a result of an act of God, strike, war, civil disturbance, epidemic, or court order, provided that the party has prudently and promptly acted to take any and all steps that are within the party's control to ensure performance. Subject to this provision, such non-performance shall not be deemed a default or a ground for termination.

34. Invalid Term or Condition

If any term or condition of this Contract shall be held invalid or unenforceable, the remainder of this Contract shall not be affected and shall be valid and enforceable.

35. Enforcement of Contract

A party's failure to require strict performance of any provision of this Contract shall not waive or diminish that party's right thereafter to demand strict compliance with that or any other provision. No waiver by a party of any of its rights under this Contract shall be effective unless express and in writing, and no effective waiver by a party of any of its rights shall be effective to waive any other rights.

36. Patent, Copyright and Trade Secret Indemnification

A. The Contractor shall defend, at its own expense, the City against any claim that any product or service provided under this Contract infringes any patent, copyright to trademark in the United States or Puerto Rico, and shall pay all costs, damages and attorneys' fees that a court finally awards as a result of any such claim. In addition, if any third party obtains a judgment against the City based upon Contractor's trade secret infringement relating to any product or services provided under this Contract, the Contractor agrees to reimburse the City for all costs, attorneys' fees and amount of the judgment. To qualify for such defense and or payment, the City shall:

i. give the Contractor prompt written notice within 48 hours of any claim;
ii. allow the Contractor to control the defense of settlement of the claim; and
iii. cooperate with the Contractor in a reasonable way to facilitate the defense or settlement of the claim.

B. If any product or service becomes, or in the Contractor's opinion is likely to become the subject of a claim of infringement, the Contractor shall at its option and expense:

i. provide the City the right to continue using the product or service and fully indemnify the City against all claims that may arise out of the City's use of the product or service;
ii. replace or modify the product or service so that it becomes non-infringing; or,
iii. accept the return of the product or service and refund an amount equal to the value of the returned product or service, less the unpaid portion of the purchase price and any other amounts, which are due to the Contractor. The Contractor's obligation will be void as to any product or service modified by the City to the extent such modification is the cause of the claim.

37. Survival

The Contract paragraphs titled "Patent, Copyright, Trademark, and Trade Secret Indemnification; Indemnification; and Limit of Liability" shall survive the expiration of this Contract. Software licenses, leases, maintenance and any other unexpired Agreements that were entered into under the terms and conditions of this Contract shall survive this Contract.

38. Disclosure Regarding Responsibility

A. Any prospective Contractor and any of its Principals who enter into a contract greater than sixty thousand dollars ($60,000.00) with any City for professional services, tangible personal property, services or construction agrees to disclose whether the Contractor, or any principal of the Contractor's company is presently debarred, suspended, proposed for debarment, or declared

ineligible for award of contract by any federal entity, state agency or local public body.

B. Principal, for the purpose of this disclosure, means an officer, director, owner, partner, or a person having primary management or supervisory responsibilities within a business entity or related entities.

C. The Contractor shall provide immediate written notice to the City if, at any time during the term of this Contract, the Contractor learns that the Contractor's disclosure was at any time erroneous or became erroneous by reason of changed circumstances.

D. A disclosure that any of the items in this requirement exist will not necessarily result in termination of this Contract. However, the disclosure will be considered in the determination of the Contractor's responsibility and ability to perform under this Contract. Failure of the Contractor to furnish a disclosure or provide additional information as requested will be grounds for immediate termination of this Contract pursuant to the conditions set forth in Paragraph 7 of this Contract.

E. Nothing contained in the foregoing shall be construed to require establishment of a system of records in order to render, in good faith, the disclosure required by this document. The knowledge and information of a Contractor is not required to exceed that which is the normally possessed by a prudent person in the ordinary course of business dealings.

F. The disclosure requirement provided is a material representation of fact upon which reliance was placed when making an award and is a continuing material representation of the facts during the term of this Contract. If during the performance of the contract, the Contractor is indicted for or otherwise criminally or civilly charged by any government entity (federal, state or local) with commission of any offenses named in this document the Contractor must provide immediate written notice to the City. If it is later determined that the Contractor knowingly rendered an erroneous disclosure, in addition to other remedies available to the Government, the City may terminate the involved contract for cause. Still further the City may suspend or debar the Contractor from eligibility for future solicitations until such time as the matter is resolved to the satisfaction of the City.

39. Suspension, Delay or Interruption of Work

The City may, without cause, order the Contractor, in writing, to suspend, delay or interrupt the work in whole or in part for such period of time as the City may determine. The contract sum and contract time shall be adjusted for increases in cost and/or time associated with Contractor's compliance therewith. Upon receipt of such notice, Contractor shall leave the jobsite and any equipment in a safe condition prior to departing. Contractor must assert rights to additional compensation within thirty (30) days after suspension of work is lifted and return to work is authorized. Any compensation requested for which entitlement is granted and the contract sum adjusted, shall have profit included (for work completed) and for cost only (not profit) for Contractor costs incurred directly tied to the suspension itself and not otherwise covered by Contract remedy. Any change in Total Compensation must be reflected in an Amendment executed pursuant to Section 8 of this Contract.

40. Notification

Either party may give written notice to the other party in accordance with the terms of this Paragraph. Any written notice required or permitted to be given hereunder shall be deemed to have been given on the date of delivery if delivered by personal service or hand delivery or three (3) business days after being mailed.

To the City:	**To the Contractor:**
Chief Procurement Officer purchasing@santafenm.gov PO Box 909 Santa Fe, NM 87504-0909 Caryn Grosse Facilities Project Manager III City of Santa Fe Public Works Facilities Management Division 2651 Siringo Road, Building E PO Box 909 Santa Fe, NM 87504-0909 clgrosse@santafenm.gov 505-795-2471	Elijah Murphy, Director US Electrical Corp 301 California St SE Albuquerque, NM 87108 elijahm@uselectricalcorp.com (505) 401-6004

Either party may change its representative or address above by written notice to the other in accordance with the terms of this Paragraph. The carrier for mail delivery and notices shall be the agent of the sender.

41. Succession

This Contract shall extend to and be binding upon the successors and assigns of the parties.

[THIS SPACE INTENTIONALLY LEFT BLANK]

IN WITNESS WHEREOF, the Parties have executed this Contract as of the date of the signature by the required approval authorities below.

City of Santa Fe:

_____

_____, MAYOR

DATE: _____

Contractor:
US Electrical Corp.

Elijah Murphy
_____
ELIJAH MURPHY, DIRECTOR

DATE: Dec 12, 2025

NMBTIN: 02-199167-00-7

ATTEST:

_____

_____, CITY CLERK

Approved to form and legal sufficiency by:

Kevin L. Nault
Kevin L. Nault (Dec 12, 2025 08:54:19 MST)
_____
KEVIN NAULT, ASSISTANT CITY ATTORNEY

APPROVED FOR FINANCES:

BRIAN MOYA
_____

BRIAN MOYA
_____, FINANCE DIRECTOR
Interim City Manager

GS Contract_CityWide OnCall Elevator Agreement - US Electrical Corp

Final Audit Report 2025-12-12

Created:	2025-12-11
By:	MATTHEW HARDING (mrharding@santafenm.gov)
Status:	Signed
Transaction ID:	CBJCHBCAABAAsWklLkFU1YyRD2IPIT4LR2mbZ1BMXJsM

"GS Contract_CityWide OnCall Elevator Agreement - US Electrical Corp" History

Document created by MATTHEW HARDING (mrharding@santafenm.gov)
2025-12-11 - 8:59:33 PM GMT- IP address: 63.232.20.2

Document emailed to Elijah Murphy (elijahm@uselectricalcorp.com) for signature
2025-12-11 - 9:00:30 PM GMT

Email viewed by Elijah Murphy (elijahm@uselectricalcorp.com)
2025-12-11 - 9:37:31 PM GMT- IP address: 96.88.2.73

Document e-signed by Elijah Murphy (elijahm@uselectricalcorp.com)
Signature Date: 2025-12-12 - 2:18:45 PM GMT - Time Source: server- IP address: 96.88.2.73

Document emailed to Kevin Nault (knault@santafenm.gov) for signature
2025-12-12 - 2:18:47 PM GMT

Email viewed by Kevin Nault (knault@santafenm.gov)
2025-12-12 - 3:52:17 PM GMT- IP address: 172.59.2.22

Signer Kevin Nault (knault@santafenm.gov) entered name at signing as Kevin L. Nault
2025-12-12 - 3:54:17 PM GMT- IP address: 172.59.2.22

Document e-signed by Kevin L. Nault (knault@santafenm.gov)
Signature Date: 2025-12-12 - 3:54:19 PM GMT - Time Source: server- IP address: 172.59.2.22

Agreement completed.
2025-12-12 - 3:54:19 PM GMT

Powered by Adobe Acrobat Sign

CHARGED WITH SOMETHING GREATER

11/21/25

Reference: RFQ – On-Call Elevator Services

By: US Electrical Corp
301 California St SE
Albuquerque, NM 87108

The scope and pricing below reflect on call services provided in RFQ On-Call Elevator Services dated 10/10/25 for the City of Santa Fe and is attached as addendum A to this response. All work in this scope will take place during regular working hours. Any service requests outside of working hours will be subject to the overtime billing rates listed below.

Base model pricing (Does not include applicable GRT)

- Hydraulic Elevators: $200.00/mo/unit
- Traction Elevators: $370.00/mo/unit
- Traction Elevators >5 stops: $650.00/mo/unit
- Cellular signals for ADA phones in lieu of customer provided land line: $50.00/mo/unit
- Billable rates for out-of-scope services
  - Regular time: $225.00/hr
  - Overtime: $382.00/hr
- If annual inspections from 3rd party inspector are desired, USE can outsource that work to a third party inspector. 3rd party inspection rates:
  - Hydraulic Elevators: $230.00/mo/unit
  - Traction Elevators: $370.00/mo/unit
  - Traction Elevators >5 stops: $650.00/mo/unit
  - Trip Charge of $150.00

Each pricing model above may be subject up to a 3.5% annual escalation rate.

Scope of work and terms and conditions of base contract:

US Electrical Corp agrees to maintain Purchaser's elevator equipment described below under this agreement. We will strive to provide a comprehensive maintenance program designed to protect Purchaser's investment and maximize the safety, performance, and life span of the elevator equipment to be maintained.

US Electrical Corp will service each elevator listed in this agreement monthly. These service visits will be performed during normal business working days and hours, which are defined as Monday through Friday, 7:00 AM to 4:30 PM (except scheduled holidays, including IUEC holidays). All work performed before or after normal business working days and hours shall be

considered "Overtime". Response times will meet or exceed the times listed in section 4 and 5 of the scope of services section of the RFQ.

US Electrical Corp will perform the following services:

Examine and service Purchaser's elevator equipment as outlined per applicable code adopted by the authority having jurisdiction. Throughout the year, our examination, cleaning, and lubrication will cover the following components of Purchaser's elevator system:

- Controller
- Machine (if applicable) and associated components including ropes, sheave(s), bearings, and gears.
- Power Unit assembly including pump, motor, and valve
- Safety mechanisms
- Lubricate rails
- Car door and hoistway door devices for operation
- Seals and check valves (if applicable)
- Adjust and replace parts as needed to ensure safe and proper operation
- ADA phone monitoring
    - US Electrical Corp will monitor the ADA phones and reprogram them at the request of the Purchaser. If the ADA phone fails a proposal will be provided to the Purchaser for the ADA phone to be replaced.
    - If the ADA phone number changes, Purchaser will notify US Electrical Corp of the change within 24 hours. US Electrical Corp will reprogram the phone within 24 hours.

This contract is cancellable with cause for performance-related issues. If the Purchaser wishes to cancel the contract for performance-related issues, US Electrical Corp will have 30 days to address the listed item(s) for curing. The Purchaser must provide, in writing, a list of the items that are not meeting expectations and what expectations are needed. If the items cannot be cured, the contract will be canceled 30 days after the deadline to cure the item(s).

Safety Testing

US Electrical Corp is committed to testing Purchaser's equipment in accordance with the required periodic testing requirements outlined in the American National Safety Code for Elevators and Escalators, ASME A 17.1, as well as any different requirements adopted by the state, city or local governing authority in which the equipment is located. Unless otherwise noted, Purchaser agrees to cover any costs of the inspector and/or inspection fees. Special considerations regarding periodic safety testing are detailed below.

- Equipment-specific wiring diagrams, per the serial number of the controller, must be provided by the Purchaser and are specific to the equipment on site.
- Annual Testing is covered by this contract.
- US Electrical Corp will coordinate testing on behalf of purchaser, between inspector and mechanic.

- If any corrections are noted, US Electrical Corp will correct items within 30 days (or sooner if required by the inspector) unless those items are not covered by this maintenance agreement. Those items will be proposed to Purchaser and a signed proposal will be needed before US Electrical Corp can proceed with the required work.

Service Requests

Service requests during normal working days and hours are defined as any request for dispatch of our technician to the location of the equipment covered in this agreement. This request can come from Purchaser or Purchaser's representative, the building or building's representative, emergency personnel, or passengers through the elevator's communication device. It includes minor adjustments and responses to emergency entrapments that can be completed within two hours (excluding travel time) but does not include regularly scheduled maintenance visits. US Electrical Corp commits to responding to Purchaser's service requests during normal business working days and hours, and Purchaser is responsible for the costs of any necessary replacement parts and all labor costs including travel time, travel expenses, and time spent on the job for non-equipment related failures, which will be invoiced at US Electrical Corp's standard billing rates. Equipment-related failures are covered by the maintenance contract and are not billable to Purchaser unless those failures have an obsolete part. If a part is obsolete, US Electrical Corp will provide a quote to the Purchaser, along with an explanation of the obsolescence, before proceeding with the work.

Overtime Service Requests

US Electrical Corp will respond to overtime service requests, and Purchaser is accountable for the overtime portion of labor costs including travel time, and time spent on the job, invoiced at US Electrical Corp's overtime standard billing rates if the request is the result of a non-equipment failure or requests for overtime testing. Overtime service requests refer to those performed before or after normal business working days and hours as outlined in this agreement. For this contract, the overtime time billable rate is $382.00/hour. The regular time billable rate is $225.00/hour.

Maintenance Control Program

US Electrical Corp conducts service in line with ASME A17.1 – 2016. Section 8.6 of the code requires the Purchaser to have a Maintenance Control Program (MCP), and US Electrical Corp's MCP meets or exceeds all requirements outlined in Section 8.6. The Maintenance Control Program includes US Electrical Corp's documentation of Maintenance Tasks & Records, which is used to document all maintenance, repairs, replacements, and tests performed on the equipment and is provided with each unit as mandated by code.

Agreement Conditions

As a condition precedent to US Electrical Corp's placement of calls to the Purchaser's Authorized Contacts, the Purchaser must first complete Sections 1 and 2 below. It is the Purchaser's responsibility to inform US Electrical Corp in writing immediately of any changes to the information included in those sections during the term of this Agreement. In scenarios where US Electrical Corp is unable to reach the Purchaser's Authorized Contacts as outlined in

Section 2, the Purchaser gives US Electrical Corp permission to dispatch a technician to the location at the Purchaser's expense per applicable billing rates.

Contact 1:	Phone:
Contact 2:	Phone:

Equipment Maintenance

The Purchaser agrees to report any condition that may require the need for correction before the next regular examination. Immediate verbal and written notice is required after any occurrence or accident in or about the elevator. Additionally, the Purchaser must provide a safe place for our personnel to work and a suitable machine room with proper ventilation and appropriate air temperature control. Temperatures in the machine room must be kept between 50-90 degrees Fahrenheit.

In the event of water or other liquids present in the elevator hoistway, excluding any liquids related to the operation of the elevator system, the Purchaser will arrange for their removal and appropriate handling. US Electrical Corp reserves the right to discontinue work in the building when our personnel do not have a safe place to work. If an operational problem jeopardizing public safety is detected during equipment inspection, US Electrical Corp may shut down the equipment, informing the Purchaser in writing of the action taken and the reason for it.

Alterations and Maintenance

Purchaser agrees not to authorize any alterations, additions, adjustments, or repairs to the equipment during the term of this agreement unless notification has been given ahead of time to US Electrical Corp. Should Purchaser have concerns about the maintenance or repair methods for the covered equipment, Purchaser agrees to notify US Electrical in writing and provide us with thirty (30) days to respond or take appropriate action to address the concern.

Indemnification

In consideration of the services provided by US Electrical Corp, Purchaser agrees to indemnify and hold harmless US Electrical Corp, its employees, officers, agents, affiliates, and subsidiaries from any claims, suits, or proceedings for loss, property damage, personal injury, or death alleged to have been caused by the Purchaser or its affiliates, except for negligence by US Electrical Corp and its employees.

Insurance

US Electrical will name the Purchaser and its affiliates as additional insured with waiver of subrogation with respect to any claims arising out of contractors work on premises as defined in this agreement.

Items Not Covered

Construction, or ancillary elevator system components, and/or cosmetic items including finishes, cab enclosures (including walls, panels, ceilings, and lights), sills, flooring, main electrical panel components, below-ground pipes, jack cylinders, pistons, repairs, guide rail alignments, any heat, smoke, or fire sensor, any communication devices and/or signal lines powering these devices, any security systems that were installed by a third party, batteries, HVAC equipment or other components not related to the elevator but are in the elevator machine room or elevator hoistway, are not covered under this agreement.

Other Conditions

As Purchaser’s equipment ages, the technology, availability, and designs of equipment will evolve. If any part or component of Purchaser’s equipment covered by this agreement cannot be safely repaired and is no longer stocked or available from the original equipment manufacturer or an aftermarket source, that part or component will be deemed obsolete. Purchaser will be responsible for all charges associated with replacing the obsolete part or component, as well as all charges required to ensure that the rest of the equipment is functionally compatible with the replacement. A proposal for the work to be completed will be provided to the Purchaser. The proposal must be signed before work commences.

Additionally, any request to service, renew, replace, or repair the equipment due to abuse, misuse, vandalism, negligence, loss of power, power fluctuations, power failure, power surges, fire, smoke, explosions, water damage, storms, wind, lightning, acts of civil or military authorities, strikes, lockouts, labor disputes, theft, riot, civil commotion, war, malicious mischief, acts of God, or any other reason or cause beyond US Electrical Corp' control that affects the use or operation of the equipment will be considered non-equipment related failures and a proposal for the work to be completed will be provided to the Purchaser. The proposal must be signed before work commences.

Purchasers expressly agrees to release and discharge us and our employees from any and all claims and/or losses associated with or caused by the events listed in the prior paragraph, including personal injury, death, and property damage. US Electrical Corp shall also automatically receive an extension of time commensurate with any delay in performance caused by or related to the aforementioned, and Purchaser expressly agrees to release and discharge US Electrical Corp from any and all claims for consequential, special, or indirect damages arising from the

performance of this agreement. In no event shall US Electrical Corp's liability for damages arising from the aforementioned exceed the remaining unpaid installments of the current, unexpired term of this agreement.

Price Adjustments

Price adjustments will be communicated to purchaser before taking place. As our costs for providing the services outlined in this agreement may increase, we retain the right to adjust the price accordingly. If there is an adjustment, Purchaser's monthly price will be determined by the percentage change in the average rate paid to elevator examiners, encompassing hourly rates, fringe benefits, and union welfare. Any adjustments will be communicated to the Purchaser in writing. Notwithstanding the foregoing provision, price increases shall not occur more often than once per year and shall be subject to Purchaser accepting the increase. In the event of a price increase Purchaser does not accept, Purchaser shall have the option to terminate this agreement upon the effective date of the price increase, and written notice of Purchaser's intent to terminate shall be given not more than thirty (30) days after receiving notice of the price increase.

Once this agreement has been accepted and approved by an authorized manager of US Electrical Corp, it will exclusively and entirely constitute the agreement for the specified services. No changes or additions to this contract will be acknowledged unless made in writing and executed by both parties. In the event of a conflict, this agreement will take precedence if Purchaser's acceptance is in the form of a purchase order or similar document. This proposal is hereby fully accepted and will constitute the entire agreement between you and US Electrical Corp. The proposal is submitted for acceptance within 60 days from the Date Submitted by the US Electrical Corp representative indicated below. No agent or employee has the authority to waive or modify any terms of this agreement without the prior written approval of an authorized US Electrical Corp representative.

US Electrical Corp	Purchaser
By:_____ (signature of Authorized Individual) _____ (Print name)	By:_____ (Signature of authorized individual) _____ (Print name)

(Title) Date:_____	(Title) Date:_____

Task Orders

Task Orders will be considered on a per project basis and are considered items outside of service work scope. Task orders may include new installation, modernization, or larger repairs.

Base model pricing for modernizations

Hydraulic Elevators	Base Scope	Base Price*
2-3 Landings	Replace door equipment, fixtures, and controller. Interface with electrical and fire alarm system	$70,000.000
3-4 Landings	Same as above	Add $7,000 per landing
Other	Some applications will require power unit to be changed.	Add $15,000.00 to project
Other items	Items customer requests such as security features, cosmetic upgrades, jack replacement, door replacements, or other customer requests	Quoted on a per project basis
Base price may increase year over year consistent with labor rate increases and CPI increases.		

New Construction: Will be quoted on a per project basis depending on scope from architect.

Larger Repairs: Larger repairs would be considered upgrades but not modernization. Upgrades could be considered a cab Interior upgrade, a door operator upgrade, or work to replace misuse/abuse or failure due to acts of God such as water damage. Larger repairs will be quoted on a per project/Instant basis.

Docusign Envelope ID: 7C9092A3-AA71-45A6-8468-5527054D7D94

State of New Mexico
General Services Department
Purchasing Division

Statewide Price Agreement Amendment

Awarded Vendor:
18 Vendors

Ship To:
All State of New Mexico agencies, commissions, institutions, political subdivisions and local public bodies allowed by law.

Invoice:
As requested at time of service

Number**: 40-00000-24-00074**

Amendment No.**: One**

Term**: June 20, 2024 – June 19, 2026**

JO

Procurement Specialist**: James Ortega**

Telephone No.**: (505) 795-2516**

Email: **james.ortega@gsd.nm.gov**

Title**: ELECTRICAL SERVICES ON-CALL**

This amendment is to be attached to the respective Price Agreement and become a part thereof.

In accordance with Price Agreement provisions, and by mutual agreement of all parties, this Price Agreement is extended from June 19, 2025 to June 19, 2026 at the same price, terms and conditions.

Except as modified by this amendment, the provisions of the Price Agreement shall remain in full force and effect.

Accepted for the State of New Mexico

Dorothy Mendonca

Date: 6/24/2025

Dorothy Mendonca
New Mexico State Purchasing Agent

Certificate Of Completion

Envelope Id: 7C9092A3-AA71-45A6-8468-5527054D7D94
Status: Completed
Subject: Please DocuSign: 40-00000-24-00074 Electrical Services On-Call A001
Source Envelope:
Document Pages: 1
Signatures: 1
Envelope Originator:
Certificate Pages: 5
Initials: 2
James Ortega
AutoNav: Enabled
1100 S Saint Francis Dr
EnvelopeId Stamping: Enabled
Santa Fe, NM 87502
Time Zone: (UTC-07:00) Mountain Time (US & Canada)
james.ortega@gsd.nm.gov
IP Address: 164.64.62.10

Record Tracking

Status: Original
6/23/2025 12:14:57 PM
Holder: James Ortega
james.ortega@gsd.nm.gov
Location: DocuSign
Security Appliance Status: Connected
Pool: StateLocal
Storage Appliance Status: Connected
Pool: General Services Department
Location: Docusign

Signer Events	Signature	Timestamp
Johnny DeSha johnny.desha@gsd.nm.gov Procurement Specialist Manager Security Level: Email, Account Authentication (None)	 Signature Adoption: Pre-selected Style Using IP Address: 164.64.62.10	Sent: 6/23/2025 12:16:38 PM Viewed: 6/23/2025 1:10:11 PM Signed: 6/23/2025 1:10:37 PM
Electronic Record and Signature Disclosure: Accepted: 3/25/2025 7:13:20 AM ID: d1ec4280-451a-42ce-b36b-a39ed00bc76f		
James Ortega james.ortega@gsd.nm.gov Security Level: Email, Account Authentication (None)	 Signature Adoption: Pre-selected Style Using IP Address: 164.64.62.10	Sent: 6/23/2025 1:10:39 PM Viewed: 6/23/2025 1:11:08 PM Signed: 6/23/2025 1:11:21 PM
Electronic Record and Signature Disclosure: Accepted: 10/24/2022 4:00:52 PM ID: b93eca54-15f4-4d91-9a9f-2dee3ce43c35		
Dorothy Mendonca dorothy.mendonca@gsd.nm.gov SPD Division Director / State Purchasing Agent General Services Department Signing Group: 35000 - State Purchasing Agent Security Level: Email, Account Authentication (None)	 Signature Adoption: Pre-selected Style Using IP Address: 164.64.62.10	Sent: 6/23/2025 1:11:22 PM Viewed: 6/24/2025 10:35:04 AM Signed: 6/24/2025 10:35:12 AM
Electronic Record and Signature Disclosure: Accepted: 4/14/2023 7:24:59 AM ID: 51f6380f-50f7-4227-afb5-572b373dfb7c		

In Person Signer Events	Signature	Timestamp

Editor Delivery Events	Status	Timestamp

Agent Delivery Events	Status	Timestamp

Intermediary Delivery Events	Status	Timestamp

Certified Delivery Events	Status	Timestamp

Carbon Copy Events	Status	Timestamp

Witness Events	Signature	Timestamp

Notary Events	Signature	Timestamp

Envelope Summary Events	Status	Timestamps
Envelope Sent	Hashed/Encrypted	6/23/2025 12:16:38 PM
Certified Delivered	Security Checked	6/24/2025 10:35:04 AM
Signing Complete	Security Checked	6/24/2025 10:35:12 AM
Completed	Security Checked	6/24/2025 10:35:12 AM

Payment Events	Status	Timestamps

Electronic Record and Signature Disclosure

ELECTRONIC RECORD AND SIGNATURE DISCLOSURE

A. ELECTRONIC RECORD AND SIGNATURE DISCLOSURE (ERSD)

From time to time, New Mexico General Services Department (GSD), on behalf of the State of New Mexico (SONM), may be required by law to provide you with certain written notices or disclosures. Stated below are the terms and conditions for GSD's providing you such notices and disclosures electronically through the DocuSign system. Please read this information carefully. If you are able to access this information electronically and agree to **this Electronic Record and Signature Disclosure (ERSD)**, please confirm your agreement by selecting the check-box next to "I agree to use electronic records and signatures" before clicking "CONTINUE" within the DocuSign system.

B. Obtaining paper copies

At any time up to twenty (20) calendar days following your use of DocuSign to electronically sign a document, you may request a paper copy of any record provided or made available electronically to you by GSD. You will have the ability to download and print documents SONM sends you through the DocuSign system during and immediately after the signing session and, if you elect to create a DocuSign account, you may access the documents for a twenty (20) calendar day period after such documents are first sent to you. Following the twenty (20) day period, if you want GSD to send you paper copies of any such documents from GSD's office, you will be charged a $1.00 per-page fee plus postage. You may request delivery of such paper copies from GSD by following the procedure stated in Section H, below.

C. Withdrawing your consent

If you decide to receive notices and disclosures from GSD electronically, you may at any time change your mind and inform GSD you want to receive required notices and disclosures only in paper format. The procedure concerning how you may inform GSD of your decision to receive future notices and disclosures in paper format as well as withdraw your consent to receive notices and disclosures electronically is stated in Section D, immediately below.

D. Consequences of changing your mind

If you elect to receive required notices and disclosures only in paper format, it will slow the speed with which GSD will be able to complete certain steps in specific transactions and deliver paper copies to you. GSD will need: (1) to send the required notices or disclosures to you in paper format; and (2) wait until GSD receives your acknowledgment of your receipt of such paper notices or disclosures. Further, you will no longer be able to use the DocuSign system to receive required notices and consents electronically from SONM or to electronically sign documents generated and sent to you from SONM.

E. All notices and disclosures will be sent to you electronically

Unless you inform GSD otherwise according to these procedures, GSD will electronically provide you through the DocuSign system all required notices, disclosures, authorizations, acknowledgements and other documents that are required to be provided or made available to you during the course of your electronic signature relationship with SONM. To reduce the possibility of inadvertent non-receipt, GSD prefers to provide all required notices and disclosures by the same method and to the same email or physical address that you furnish to GSD. Thus, you may receive the disclosures and notices electronically or in paper form. If you do not agree with this procedure, please inform GSD according to the procedures stated in Section I, below. Please also refer to Section D, immediately above, which states the consequences resulting from your declination of electronic delivery of notices and disclosures.

F. How to contact GSD:

You may inform General Services Department (GSD) of any changes you select regarding State Purchasing Division's (SPD) electronic communications with you, to request paper copies of certain information from SPD, and to withdraw your prior consent to receive notices and disclosures electronically by emailing your request(s) to SPD at: *GSD.SPDinfo@state.nm.us*

G. To advise SPD of your new email address

To inform SPD of a change in the email address to which SPD sends you notices and disclosures electronically, you must send an email to SPD at *GSD.SPDinfo@state.nm.us* and in the body of such request you must include your previous and new email addresses.

H. To request paper copies from SPD

To request delivery of paper copies of electronic notices and disclosures that DocuSign and/or SPD have previously provided to you, you must send an email to SPD at *GSD.SPDinfo@state.nm.us* and in the body of your email request state your email address, full name, mailing address, and telephone number. SPD will charge you a $1.00 per page copy fee plus postage.

I. To withdraw your consent with SPD

To inform SPD that you no longer wish to receive notices and disclosures in electronic format you may:

(1) Decline to sign a document from within a signing session, and on the subsequent page, select the check-box indicating you wish to withdraw your consent, or you may:

(2) Send SPD an email to *GSD.SPDinfo@state.nm.us* and in the body of your request state your email address, full name, mailing address, and telephone number.

J. Required hardware and software

The minimum system requirements for using the DocuSign system may change over time. The current DocuSign system requirements may be found at:
https://support.docusign.com/guides/signer-guide-signing-system-requirements

K. Acknowledging your access and consent to receive and sign documents electronically

To confirm that you are able to electronically access the information contained in this Electronic Record and Signature Disclosure (ERSD), please confirm that you have: (1) read this ERSD, and either: (2) you are able to print on paper or electronically save this ERSD for your future reference and access; or (3) you are able to email this ERSD to an email address where you will be able to print this ERSD on paper and/or save this ERSD for your future reference and access. Further, if you consent to receiving notices and disclosures from DocuSign and/or SPD exclusively in electronic format, then select the check-box next to "I agree to use electronic records and signatures," before you click "CONTINUE" within the DocuSign system.

By selecting the check-box next to "I agree to use electronic records and signatures," you confirm that:

- You have read this Electronic Record and Signature Disclosure (ERSD); and
- You can print this ERSD on paper, or you can save and/ or send this ERSD to a location where you can print this ERSD, for your future reference and access; and
- Until or unless you notify SPD as stated in this ERSD, you consent to exclusively receive through electronic means all notices, disclosures, authorizations, acknowledgements, and other documents that are required to be provided or made available to you by SPD during the course of your electronic signature relationship with SPD.

DocuSign Envelope ID: EDCD97EE-B020-479E-BF6A-7058AE6341AF

State of New Mexico
General Services Department

Statewide Price Agreement

Awarded Vendor:
19 Vendors – See pages 6-9

Ship To:
All State of New Mexico agencies, commissions, institutions, political subdivisions and local public bodies allowed by law.

Invoice:
As Requested at Time of Order

Price Agreement Number**:** **40-00000-24-00074**

Payment Terms**:** **Net 30**

F.O.B.**:** **Destination**

Delivery**:** **As Requested**

JO

Procurement Specialist**:** **James Ortega**

Telephone No.**:** **(505) 795-2516**

Email: **james.ortega@gsd.nm.gov**

Title**:** **Electrical Services On-Call**

Term**:** **June 20, 2024 – June 19, 2025**

This Statewide Price Agreement is made subject to the "terms and conditions" as indicated on subsequent pages.

Accepted for the State of New Mexico

Dorothy Mendonca

Date: 6/20/2024

Dorothy Mendonca
New Mexico State Purchasing Agent

DocuSign Envelope ID: EDCD97EE-B020-479E-BF6A-7058AE6341AF

Terms and Conditions

(Unless otherwise specified)

1. **General:** When the State Purchasing Agent or his/her designee issues a purchase document in response to the Vendor's bid, a binding contract is created.

2. **Variation in Quantity:** No variation in the quantity of any item called for by this order will be accepted unless such variation has been caused by conditions of loading, shipping, packing or allowances in manufacturing process and then only to the extent, if any, specified in this order.

3. **Assignment:**

a. Neither the order, nor any interest therein, nor any claim thereunder, shall be assigned or transferred by the Vendor, except as set forth in Subparagraph 3b or as expressly authorized in writing by the State Purchasing Agent or his/her designee. No such assignment or transfer shall relieve the Vendor from the obligations and liabilities under this order.

b. Vendor agrees that any and all claims for overcharge resulting from antitrust violations which are borne by the State as to goods, services, and materials purchased in connection with this bid are hereby assigned to the State.

4. **State Furnished Property:** State furnished property shall be returned to the State upon request in the same condition as received except for ordinary wear, tear and modifications ordered hereunder.

5. **Discounts:** Prompt payment discounts will not be considered in computing the low bid.

6. **Inspection:** Final inspection and acceptance will be made at the destination. Supplies rejected at the destination for nonconformance with specifications shall be removed at the Vendor's risk and expense, promptly after notice of rejection.

7. **Inspection of Plant:** The State Purchasing Agent or his/her designee may inspect, at any reasonable time, the part of the Contractor's, or any subcontractor's plant or place of business, which is related to the performance of this contract.

8. **Commercial Warranty:** The Vendor agrees that the supplies or services furnished under this order shall be covered by the most favorable commercial warranties the Vendor gives for such to any customer for such supplies or services. The rights and remedies provided herein shall extend to the State and are in addition to and do not limit any rights afforded to the State by any other clause of this order. **Vendor agrees not to disclaim warranties of fitness for a particular purpose of merchantability.**

9. **Taxes:** The unit price shall exclude all state taxes.

10. **Packing, Shipping and Invoicing:**

a. The State's purchasing document number and the Vendor's name, user's name and location shall be shown on each packing and delivery ticket, package, bill of lading and other correspondence in connection with the shipments. The user's count will be accepted by the Vendor as final and conclusive on all shipments not accompanied by a packing ticket.

b. The Vendor's invoice shall be submitted duly certified and shall contain the following information: order number, description of supplies or services, quantities, unit price and extended totals. Separate invoices shall be rendered for each and every complete shipment.

c. Invoices must be submitted to the using agency and NOT the State Purchasing Agent.

11. **Default:** The State reserves the right to cancel all or any part of this order without cost to the State, if the Vendor fails to meet the provisions of this order and, except as otherwise provided herein, to hold the Vendor liable for any excess cost occasioned by the State due to the Vendor's default. The Vendor shall not be liable for any excess costs if failure to perform the order arises out of causes beyond the control and without the fault or negligence of the Vendor, such causes include but are not restricted to, acts of God or the public enemy, acts of the State or Federal Government, fires, floods, epidemics, quarantine restrictions, strikes, freight embargoes, unusually severe weather and defaults of subcontractors due to any of the above, unless the State shall determine that the supplies or services to be furnished by

DocuSign Envelope ID: EDCD97EE-B020-479E-BF6A-7058AE6341AF

the subcontractor were obtainable from other sources in sufficient time to permit the Vendor to meet the required delivery scheduled. The rights of the State provided in this paragraph shall not be exclusive and are in addition to any other rights now being provided by law or under this order.

12. **Non-Collusion:** In signing this bid the Vendor certifies he/she has not, either directly or indirectly, entered into action in restraint of free competitive bidding in connection with this offer submitted to the State Purchasing Agent or his/her designee.

13. **Nondiscrimination:** Vendor doing business with the State of New Mexico must be in compliance with the Federal Civil Rights Act of 1964 and Title VII of the Act (Rev. 1979) and the Americans with Disabilities Act of 1990 (Public Law 101-336).

14. **The Procurement Code:** Sections 13-1-28 through 13-1-199 NMSA 1978, imposes civil and criminal penalties for its violation. In addition the New Mexico criminal statutes impose felony penalties for bribes, gratuities and kickbacks.

15. **Items:** All bid items are to be NEW and of most current production, unless otherwise specified.

16. **Payment for Purchases:** Except as otherwise agreed to: late payment charges may be assessed against the user state agency in the amount and under the conditions set forth in Section 13-1-158 NMSA 1978.

17. **Workers' Compensation:** The Contractor agrees to comply with state laws and rules pertaining to Workers' Compensation benefits for its employees. If the Contractor fails to comply with Workers' Compensation Act and applicable rules when required to do so, this Agreement may be terminated by the contracting agency.

18. **Submission of Bid:** Bids must be submitted in a sealed envelope with the bid number and opening date clearly indicated on the bottom left hand side of the front of the envelope. Failure to label bid envelope will necessitate the premature opening of the bid in order to identify the bid number.

19. **Contractor Personnel**: Personnel proposed in the Contractor's written bid to the Procuring Agency are considered material to any work performed under this Price Agreement. Once a Purchase Order or contract has been executed, no changes of personnel will be made by the Contractor without prior written consent of the Procuring Agency. Replacement of any Contractor personnel, if approved, shall be with personnel of equal ability, experience, and qualifications. The Contractor will be responsible for any expenses incurred in familiarizing the replacement personnel to insure their being productive to the project immediately upon receiving assignments. Approval of replacement personnel shall not be unreasonably withheld. The Procuring Agency shall retain the right to request the removal of any of the Contractor's personnel at any time.

20. **Subcontracting:** The Contractor shall not subcontract any portion of the Price Agreement without the prior written approval of the Procuring Agency. No such subcontracting shall relieve the Contractor from its obligations and liabilities under this Price Agreement, nor shall any subcontracting obligate payment from the Agency.

21. **Records and Audit:** The Contractor shall maintain detailed time and expenditure records that indicate the date, time, nature, and cost of services rendered during this Price Agreement's term and effect, and retain them for a period of three (3) years from the date of final payment under this Price Agreement. The records shall be subject to inspection by the Agency, State Purchasing Division, Department of Finance and Administration, and for Information Technology contracts, State Chief Information Officer. The Agency shall have the right to audit billings, both before and after payment. Payment for services under this Price Agreement shall not foreclose the right of the Agency to recover excessive or illegal payments.

22. **Subcontracts:** The foregoing requirements for Contractor Personnel, Subcontracting, and Audit shall be inserted into all subcontracts from the prime contractor to the subcontractor.

New Mexico Employees Health Coverage

A. If Contractor has, or grows to, six (6) or more employees who work, or who are expected to work, an average of at least 20 hours per week over a six (6) month period during the term of the contract, Contractor certifies, by signing this agreement, to have in place, and agrees to maintain for the term of the contract, health insurance for its New Mexico

DocuSign Envelope ID: EDCD97EE-B020-479E-BF6A-7058AE6341AF

Employees and offer that health insurance to its New Mexico Employees if the expected annual value in the aggregate of any and all contracts between Contractor and the State exceeds $250,000 dollars.

B. Contractor agrees to maintain a record of the number of its New Mexico Employees who have (a) accepted health insurance; (b) declined health insurance due to other health insurance coverage already in place; or (c) declined health insurance for other reasons. These records are subject to review and audit by a representative of the state.

C. Contractor agrees to advise all of its New Mexico Employees of the availability of State publicly financed health care coverage programs by providing each of its New Mexico Employees with, as a minimum, the following web site link to additional information: https://bewellnm.com.

D. For purposes of this Paragraph, the following terms have the following meanings:

(1) "New Mexico Employee" means any resident of the State of New Mexico employed by Contractor who performs the majority of the employee's work for Contractor within the State of New Mexico, regardless of the location of Contractor's office or offices; and

(2) "offer" means to make available, without unreasonable restriction, enrollment in one or more health coverage plans and to actively seek and encourage participation in order to achieve the goals of Executive Order 2007-049. This could include State publicly financed public health coverage programs such as *Insure New Mexico!*

Statewide Price Agreement

Article I – Statement of Work
Under the terms and conditions of this Price Agreement all State of New Mexico agencies, commissions, institutions, political subdivisions and local public bodies allowed by law may issue orders for items and/or services described herein. The terms and conditions of this Price Agreement shall form a part of each order issued hereunder.

The items and/or services to be ordered shall be as listed under Article IX - Price Schedule. All orders issued hereunder will bear both an order number and this Price Agreement number. It is understood that no guarantee or warranty is made or implied by the New Mexico State Purchasing Agent, his/her designee or the user that any order for any definite quantity will be issued under this Price Agreement. The Contractor is required to accept the order and furnish the items and/or services in accordance with the articles contained hereunder for the quantity of each order.

Article II – Term
The term of this Price Agreement, for issuance of orders, shall be as indicated in the specifications.

Article III – Specifications
Items and/or services furnished hereunder shall conform to the requirements of specifications and/or drawings applicable to items listed under Article IX-Price Schedule. Orders issued against this schedule will show the applicable Price Agreement item(s), number(s), and price(s); however they may not describe the item(s) fully.

Article IV – Shipping and Billing Instructions
Contractor shall ship in accordance with the following instructions: Shipment shall be made only against specific orders which the user may place with the Contractor during the term; The Contractor shall enclose a packing list with each shipment listing the order number, price agreement number and the commercial parts number (if any) for each item; Delivery shall be made as indicated on page1. If vendor is unable to meet stated delivery the State Purchasing Agent or his/her designee must be notified.

Article V – Termination
The Agency may terminate this Agreement for convenience or cause. The Contractor may only terminate this Agreement based upon the Agency's uncured, material breach of this Agreement. Contractor shall give Agency written notice of termination at least thirty (30) days prior to the intended date of termination, which notice shall (i) identify all the Agency's material breaches of this Agreement upon which the termination is based and (ii) state what the Agency must do to cure such material breaches. Contractor's notice of termination shall only be effective (i) if the Agency does not cure all material breaches within the thirty (30) day notice period or (ii) in the case of material breaches that cannot be cured within thirty (30) days, the Agency does not, within the thirty (30) day notice period, notify the Contractor of its intent to cure and begin with

DocuSign Envelope ID: EDCD97EE-B020-479E-BF6A-7058AE6341AF

due diligence to cure the material breach. Termination of this Contract, however, shall not affect any outstanding orders. This provision is not exclusive and shall not waive other rights and remedies afforded either party in the event of breach of contract or default. In such instances the contract may be cancelled effective immediately.

Article VI – Amendment
This Price Agreement may be amended by mutual agreement of the New Mexico State Purchasing Agent or his/her designee and the Contractor upon written notice by either party to the other. An amendment to this Price Agreement shall not affect any outstanding orders issued prior to the effective date of the amendment as mutually agreed upon, and as published by the New Mexico State Purchasing Agent or his/her designee. Amendments affecting price adjustments and/or the extension of a price agreement expiration date are not allowed unless specifically provided in the bid and price agreement specifications.

Article VII – Indemnity Clause
Contractor shall indemnify and hold harmless the State, its officers and employees, against liability, claims, damages, losses or expenses arising out of bodily injury to persons or damage to properties caused by, or resulting from Contractor's, and/or its employees, own negligent act or omission while Contractor, and/or its employees, perform or fails to perform its obligations and duties under the Terms and Conditions of this agreement. This save harmless and indemnification clause is subject to the immunities, provisions, and limitations of the Tort Claims Act (Section 41-4-1, et seq., N.M.S.A. 1978 comp. and Section 57-7-1 N.M.S.A. 1878 comp. and any amendments thereto.

It is specifically agreed between the parties executing this agreement that it is not intended by any of the provisions of any part of the agreement to create in the public or any member thereof a third party beneficiary or to authorize anyone not a party to the agreement to maintain a suit(s) for wrongful death(s), bodily and/ or personal injury(s) to person(s), damage(s) to property(ies) and/or any other claim(s) whatsoever pursuant to the provisions of this agreement.
Vendor shall provide all insurance necessary to employees on the work site, including but not limited to Worker's Compensation.

Article VIII – Issuance or Orders
Only written signed orders are valid under this Price Agreement.

Article IX – Packing (if applicable)
Packing shall be in conformance with standard commercial practices.

Article X – Price Schedule
Prices as listed in the price schedule hereto attached are firm.

DocuSign Envelope ID: EDCD97EE-B020-479E-BF6A-7058AE6341AF

Awarded Vendors:

(AA) 0000165669
A and S Enterprises Inc.
106 Roehl Rd NW
Albuquerque, NM 87107
Bryan Abeyta, 505-916-7470
Bryan@asenm.com

Payment Term: Net 30
Delivery: 106 Roehl Rd NW Albuquerque, NM 87107
Public Works: 1758420150713
License: #380956, EE98

(AB) 0000097177
APIC Solutions, Inc.
5550 Midway Park Place NE
Albuquerque, NM 87109
Steve Foster, 505-345-1381
service@apicnm.com

Payment Term: Net 30
Delivery: Destination, unless otherwise indicated by NM State Purchasing Agent
Public Works: 2431920120420
License: #373987, EE98, GB98, GS24

(AC) 0000133362
Alpha & Omega Electric, LLC
1301 Alcazar St. NE
Albuquerque, NM 87110
Elizabeth Kinkade, 505-554-3313
elizabeth@electrical.team

Payment Term: Net 30
Delivery: As Requested
Public Works: 24753773182017
License: #387077, EE98

(AD) 0000046277
B&D Industries, Inc.
9720 Bell Avenue SE
Albuquerque, NM 87123
Jamie Westerfield, 505-299-4464
newwojobs@banddindustries.com

Payment Term: Net 30
Delivery: F.O.B. Destination
Public Works: 0191702011629
License: #1426, EE98, EL01, GA98, GB98, EL01, GF09, MM98

(AE) 0000049380
Bixby Electric Inc.
521 Wheeler SE
Albuquerque, NM 87102
Bob 505-350-1098
Bob@Bixbyelectric.com

Payment Term: Net 30
Delivery: As Needed
Public Works: 190612011621
License: #28568, EE98, EL01, GA03, GA98, GB98, GF98,

(AF) 0000145462
Cypress Communication Systems, LLC
2469 Corrales Rd Ste B3
Corrales, NM 87048
Joshua Fenlason, 505-796-5664
info@cypressnm.com

Payment Term: Net 30
Delivery: As Requested
Public Works: 2427820120330
License: #359124, EE98, ES03

DocuSign Envelope ID: EDCD97EE-B020-479E-BF6A-7058AE6341AF

(AG) 0000049571
Enterprise Electrical Services, Inc.
PO Box 53248
Albuquerque, NM 87153
505-480-4293, Chris Gutierrez
cgutierrez@entelcomm.com

Payment Term: Net 30
Delivery: F.O.B. Destination
Public Works: 187062011526
License: #29455, EE98, EL01, GB98

(AH) 0000086357
Four Winds Mechanical HTC/AC
8915 ADAMS ST NE
ALBUQUERQUE, NM 87113
Chauling "Lynn" Armijo, 505-908-0090
lynn@4windsmechanical.com

Payment Term: Net 30
Delivery: 24 HOURS
Public Works: 02885820130507
License: #82333, GB89, EE98, MM98

(AI) 0000049954
Great Western Electrical Inc.
3310 Girard Blvd NE
Albuquerque, NM 87107
Scott Burson, 505-881-6525
sburson@nmgwe.com

Payment Term: Net 30
Delivery: 3310 Girard Blvd NE
Albuquerque, NM 87107
Public Works: 0214120070215
License: #93237, EE98, EL01

(AJ) 0000052470
HEI, Inc.
P.O. Box 31310
Albuquerque, NM 87190
Will Humbard, 505-880-1819
whumbard@heinm.com

Payment Term: Net 30
Delivery: F.O.B Destination
Public Works: 002495720120723
License: #61439, EE98, EL01, GB98, MM02, MM03

(AK) 0000046144
J and G Electric Co.
512 S. Main St.
Roswell, NM 88203
Brad Fuchs, 575-622-0146
brad@jandgelectricco.com

Payment Term: Net 30
Delivery: As Requested
Public Works: 0951920090512
License: #7408, EE98, GB98

(AL) 0000046795
Lynco Electric Co Inc
1520 West Amador Ave.
Las Cruces, New Mexico, 88005
Nathan Wilcox (575) 523-9066
lyncoelecnathan@comcast.net

Payment Term: Net 30
Delivery: F.O.B. Destination
Public Works: 0101432009071
License: #10715, EE98, EL01, GB98

DocuSign Envelope ID: EDCD97EE-B020-479E-BF6A-7058AE6341AF

(AM) 0000047584
McDade-Woodcock,Inc.
2404 Claremont Ave. NE
Albuquerque, NM 87107
Randall Dupuy, 505-884-0155
randyd@mwieic.com

Payment Term: Net 30
Delivery: As Requested
Public Works: 0188122011604
License: #17754, EE98, EL01, GA01

(AN) 0000114869
Pluma, LLC
6301 4th St. NW, Suite 1
Albuquerque, NM 87017
Timothy Everett, (505) 345-0755
tim@plucys.com

Payment Term: Net 30
Delivery: 6301 4th St. NW, Suite 1
Albuquerque, NM 87017
Public Works: 1755520150602
License: #387286, EE98, GB98

(AO) 0000142264
Red Seven Electric LLC
1322 Frontage Rd
Belen, NM 87002
Manuel Medina, 505-859-5414
mmedina@redsevenelectric.com

Payment Term: Net 30
Delivery: As Requested
Public Works: 282111398962018
License: #391745, EE98

(AP) Not in SHARE
Spier Electric LLC
9528 Big Rock Dr
Albuquerque NM 87114
John Spier, 505-420-7729
John@spierelectric.com

Payment Term: Net 30
Delivery: Spier Electric LLC 9528 Big Rock Dr
Albuquerque NM 87114
Public Works: 029340758382023
License: #414474, EE98

(AQ) 0000173937
SRC Electrical LLC
20 Alamotero Lane
Alamogordo NM 88310
Luis Morales, 575-921-4478
luismorales954@gmail.com

Payment Term: Net 30
Delivery: 20 Alamotero Lane,
Alamogordo NM 88310
Public Works: 28811931752024
License: #387778, EE98

(AR) 0000050920
TLC Company, LLC
5000 Edith Blvd. NE
Albuquerque, NM 87107
Nick Rodriguez, 505-761-9696
nrodriguez@tlcplumbing.com

Payment Term: Net 30
Delivery: As requested.
Public Works: 28806888172024
License: #414079, EE98, GA98, GB98, GF98, MM98

DocuSign Envelope ID: EDCD97EE-B020-479E-BF6A-7058AE6341AF

(AS) 0000147945
US Electrical Corp
301 California Street SE
Albuquerque, NM 87108
Brock Darnell, 505-260-1000
brockd@uselectricalcorp.com

Payment Term:	Net 30
Delivery:	301 California Street SE Albuquerque, NM 87108
Public Works:	01954020110720
License:	#57043, EE98, EL01, GB98

DocuSign Envelope ID: EDCD97EE-B020-479E-BF6A-7058AE6341AF

Specifications:
The State of New Mexico, General Services Department (GSD) wishes to establish a Statewide Price Agreement for Electrical Services On-Call and work related to these systems. Under the terms and conditions of this Price Agreement all State of New Mexico Agencies, Commissions, Institutions, Political Sub-divisions, and Local Bodies allowed may issue orders for items and/or services described herein. The terms and conditions of this Price Agreement shall form a part of each other issued hereunder.

Procurement will be based on bidders supplying pricing through an established cost schedule. The Price Agreement will reflect the awarded contractor's willingness to respond to contract vendor requests when such requests are originated by authorized procuring agencies.

Legislation Affecting Price Agreement:
If future legislation affects any terms or conditions of the Price Agreement the Price Agreement may be amended to comply with the legislation.

Term:
The term of this agreement shall be for one (1) year from date of award with the option to extend for a period (s) of two (2) additional years, on a year-by-year basis, by mutual agreement of all parties and approval of the New Mexico State Purchasing Director at the same price, terms and conditions. This agreement shall not exceed three (3) years.

Compensation Cap:
Per NMSA 1978 Section 13-1-154.1, the cap of four million dollars ($4,000,000) is effective for every Project. The cap of twelve million five hundred thousand dollars ($12,500,000) is effective for each Contractor's contract Price Agreement.

Federal Funds:
Projects or Services rendered using this Price Agreement *may* involve Federal Funds, therefore; New Mexico Resident Preference, Resident Veterans Preference and Resident Native Preferences shall not apply to the evaluation or award of this Price Agreement.

Multiple Awards:
Pursuant to the Procurement Code, Sections 13-1-153 and 13-1-154, the State reserves the right to issue multiple awards to obtain the items listed. Multiple awards are recommended to ensure availability and timely delivery. Awards will be made to meet the best interests of the State of New Mexico.

Escalation / Reduction Clause:
Contractor shall keep pricing fixed for each year of this Agreement. Thereafter, in the event of a Department of Workforce Solutions wage rate decision increase or a Union required increase, an escalation request will be reviewed by NM State Purchasing Division on an individual basis. SPD and the Contractor may adjust pricing no more than once annually through an amendment to the Agreement at the time of Agreement renewal. The Contractor shall submit all pricing increase requests to SPD directly or through the agency contact in writing and provide substantiating evidence that each request is based on demonstrable market changes impacting the cost of products. The request must show all proposed increases by line item and include supporting documentation acceptable to SPD (such as a letter from a manufacturer indicating price increases, etc.) SPD's decision on what is acceptable in this context is final and shall be accepted by all parties to the Agreement.

Requested price increases that exceed 10% will not be accepted. No price increase may result in a higher profit margin for the Contractor than at the beginning of the initial term of this Agreement. Pricing changes will apply to Agreements and amendments to Agreements entered on and after the effective date of the price change. Price decreases as well as increases shall apply in the same manner. If vendor's prices are reduced for any reason, users shall receive the benefit of such reductions, immediately. Price increases will not be retroactive to orders already in house or backorders. Orders will be filled at the price in effect on the date of receipt of the order by the vendor.

DocuSign Envelope ID: EDCD97EE-B020-479E-BF6A-7058AE6341AF

To facilitate prompt consideration, all requests for price increase must include all information listed below:

1. Agreement Item Number
2. Current Item Price
3. Proposed New Price
4. Percentage of Increase
5. Mill/Supplier Notification of price increase indicating percentage of increase including reason for increase.
6. Department of Workforce Solutions Wage Rate documentation of old and new rate schedules.

Insurance:
The contractor shall provide all insurance necessary for its employees on the project, including, but not limited to, workman's compensation insurance. The contractor agrees to comply with state laws and rules pertaining to workers' compensation insurance coverage for its employees. If the contractor fails to comply with the workers' compensation act and applicable rules, when required to do so, this contract will be cancelled immediately.

Contractor shall indemnify and hold harmless the state, its officers and employees against liability claims, damages, losses, or expenses arising out of bodily injury to persons or damage to property caused by or resulting from the contractors, and/or its employees, own negligent act(s) or omissions while the contractor, and/or its employees, perform(s) or fails to perform its obligations and duties under the

Terms and Conditions of this agreement. This "save harmless and indemnification" clause is subject to the immunities, provisions, and limitations of the tort claims act (41-4-1, et seq., N.M.S.A. 1978 comp), section 57-7-1 N.M.S.A. 1978 comp. and any amendments thereto.

It is specifically agreed between the parties executing this agreement that it is not intended by any of the provisions of the agreement to create the public or any member thereof a third party beneficiary or to authorize anyone not a party to the agreement to maintain a suit(s) for wrongful death(s), bodily and/or personal injury(ies) to person(s), damages to property(ies) and/or any other claim(s) whatsoever, pursuant to the provisions of this agreement.

The contractor shall provide public liability insurance for the minimum amount of $300,000 for damage to or destruction of property arising out of each occurrence; the amount of $300,000 to any person for any number of claims arising out of each occurrence for all damages other than property damage as permitted under the New Mexico tort claims act; and the amount of $1,000,000 for all claims arising out of each occurrence.

Builder's Risk Insurance:
Before commencing the Work for a project under this Price Agreement, the Contractor shall secure and maintain a Builder's Risk Policy upon the entire project for the full cost of replacement at the time of loss. This insurance shall also name the Owner, Contractor, and Subcontractors of all tiers, as named insureds. The Owner and Contractor shall be named as loss payee(s).
This insurance shall be written as a Builder's Risk Policy or equivalent form to cover all risks of physical loss to property except those specifically excluded by the policy. The policy, at a minimum unless otherwise agreed to in writing, shall insure against the perils of: fire, lightning, explosion, windstorm, hail, smoke, water from any source, aircraft (except aircraft, including helicopters, operated by or on behalf of the Contractor), vehicles, riot and civil commotion, terrorism, theft, vandalism, malicious mischief, earthquake, collapse, defective design, defective workmanship, defective materials, and earth movement including mudslide.

This insurance shall also include, at a minimum, additional coverages for:

a. damage to land excavation, footings, and/or temporary structures.
b. property in transit or in temporary storage.
c. engineering, testing, applicable design, and related soft costs.

DocuSign Envelope ID: EDCD97EE-B020-479E-BF6A-7058AE6341AF

d. loss of use, delays in occupancy resulting from a covered cause of loss.
e. fencing and signage.
f. demolition and debris removal including pollutants.
g. Fire department service charges and refill of fire protection devices.

The Contractor shall be solely responsible for any deductible amounts or coinsurance penalties.

This policy shall provide for a waiver of subrogation in favor of the Owner, Contractor, and Subcontractors of all tiers. This insurance shall remain in effect until the project is accepted by the Owner or occupied in whole or in part. Partial occupancy or use of the work shall not commence until the Owner has secured the consent of the insurance company or companies providing the coverage required in this subsection. Should any partial occupancy or use of the work occur prior to the foregoing consent being obtained, such partial occupancy or use does not create an automatic right of cancellation of the coverage required in this subsection.

The Builder's Risk Policy shall be provided by an insurance company with an A.M. Best rating of A VI, or better, acceptable to the Owner, and authorized to conduct business in the State of New Mexico.

Before commencing a project, the contractor shall provide a copy of the Builder's Risk Policy or coverage binder with endorsements obtained in compliance with this subsection.

If the Contractor does not maintain Builder's Risk insurance as required by this Price Agreement, including all the endorsements, coverages, and deductibles described herein, the Contractor shall give written notice to the Owner before commencing the Work or immediately upon notice by the insurance company. The Owner may elect to provide insurance options to the Contractor or secure insurance to protect its interests, including the coverage of deductibles in consultation with the Contractor.
The cost difference, if any, of the force-placed insurance shall be the sole responsibility of the Contractor and will not be considered a change order to the Price Agreement. In any event, no work shall commence pursuant to the Price Agreement until a Builder's Risk Policy is in place to the satisfaction and protection of the Owner.
The coverages afforded to the Owner by the State of New Mexico General Services Department/Risk Management Division (GSD/RMD) under their Certificate of Coverage including property in course of construction shall be excess over the Builder's Risk policy secured by the Contractor. The State's Certificate of Coverage will not indemnify any private sector contractor, entity, business, person, or organization.

Wage rates:
All work covered by this invitation to bid shall be in accordance with applicable state laws and is subject to the minimum wage rate determination issued by the Department of Workforce Solutions if applicable.

A wage rate decision is ***required*** by the public works minimum wage act for construction, demolition or renovation purposes on projects costing $60,000 or more and funded in part by state or local funding. When a specific project is anticipated that will exceed $60,000, the agency will make a written request to the New Mexico Department of Workforce Solutions for a Wage Rate Determination decision at least three (3) weeks before they solicit quotes from the contractor. The contractor must agree to comply with that current wage decision for the project. The subcontractors, if applicable, will also be subject to the Wage Decision.

For the purposes of bidding the 'wage decision project' wage rate items, use the current effective DWS Wage Rates as the guideline since increases in wage rates will be handled under the escalation clause.

Performance, Payment, and Material Bonding:
A 100% performance bond and a 100% payment and material bond executed by a surety company authorized to do business in the State of New Mexico will be required of the successful bidder(s) prior to each project of $60,000.00 or more. Said bonds must be provided to the requesting agency and are to be filed with the agency's purchasing office BEFORE any work begins. Failure to comply shall result in order being issued to another vendor and difference being

DocuSign Envelope ID: EDCD97EE-B020-479E-BF6A-7058AE6341AF

charged back to the awarded contractor(s). Bond cost shall be billed as an actual cost with no markup. A copy of the bond is required to be sent to the Agency BEFORE any work begins.

Tax Note:
Bid shall not include New Mexico Gross Receipts Tax or local option tax(es). Such tax or taxes shall be added by the Contractor to its invoice at the current tax rate at each project's location, as a separate item to be paid.

Travel:
Contractors will be allowed to quote anticipated travel mileage based on one way trip from vendor's place of business to jobsite in excess of fifty (50) miles. The rate used for travel costs will be the current rate allowed by the Federal Government.

Mileage Reimbursement:
Any request for mileage reimbursement under this agreement shall be approved by the Procuring Agency prior to incurring mileage expense, and in accordance with Procuring Agency funding requirements, regulations, policies, and procedures. Mileage will be added and itemized separately at time of invoicing, unless otherwise required by the Procuring Agency.

Mileage:
"Mileage Rate" means vendors will be reimbursed based only on the mileage from the dispatch to the customer site for repair orders for each mile traveled by vehicle in excess of 50 miles as referenced in IRS standard mileage rates using link https://www.irs.gov/tax-professionals/standard-mileage-rates/ at the travel rate for that period/year travel was performed. This is pursuant to the Vendor providing the procuring entity approved work orders containing the following information:

a. Actual mileage reading that is certified as true and correct by the traveler based on the destination mileage chart of the official state map published by the Rand McNally Mileage Calculator. Reference Rand McNally mileage calculator using link: Rand McNally Maps & Driving Directions
b. If the actual mileage reading is not available on the Rand McNally mileage calculator, the procuring entity may use Google Maps - Driving Directions to calculate for reimbursement for mileage in excess of 50 miles from the dispatch to the customer site.

General:
All work shall be performed in accordance with the New Mexico building codes and electrical industry standards.

The awarded contractor shall be responsible for all permits associated with this work as required by the State of New Mexico, Construction Industries Division. The Construction Industries Division will issue permits for work performed at state owned buildings. Permit costs shall be billed as an actual cost with no markup.

The contractor will be contacted on an as needed basis to perform work associated with this contract. The user agency may solicit quotes from more than one vendor listed in this price agreement. The contractor may lower his rates on any of the bid items to submit a more competitive quote. The user agency may issue a purchase order to the contractor with the lowest quote that meets all the requirements of the scope of work. The user agency reserves the right to accept offers from contractors that desire to submit quotes which better meet the hours and identified costs to obtain a fair and reasonable price based on the level of effort and mix of labor proposed to perform the specific project.

Failure to respond to the state's requests without reasonable cause shall be grounds for termination of this contract.

The contractor and the subcontractors' employees agree to cooperate with and to abide by the rules and requirements of the requesting state agency to not interfere with the daily operations of the agency or to jeopardize the health, safety or welfare of the user agency's employees or general public conducting business with the state.

The using agency reserves the right to purchase materials directly from existing statewide price agreement sources, and to provide these materials to the contractor.

DocuSign Envelope ID: EDCD97EE-B020-479E-BF6A-7058AE6341AF

Debarred or Suspended Contractors:
A business (Contractor, Subcontractor, or Supplier) that has either been debarred or suspended pursuant to the requirements of Sections 13-1-177 through 13-1-180, and 13-4-11 through 13-4-17, NMSA 1978, shall not be permitted to do business with the State and shall not be considered for award of contract during the period for which it is debarred or suspended.

Bribes, Gratuities and Kickbacks:
It is illegal in the State of New Mexico for any public employee to solicit or accept anything of value in connection with award of contract for this Bid and for any person to offer or pay anything of value to any such public employee (30-24-1 and 30-24-2, NMSA 1978).

Pursuant to Section 13-1-191, NMSA 1978, reference is hereby made to the Criminal Laws of New Mexico (including Sections 30-24-1 through 30-24-3, NMSA 1978, and 30-41-1 through 30-41-3, NMSA 1978), which prohibit bribes, kickbacks, and gratuities, violations of which constitutes a felony. Further, the Procurement Code (Sections 13-1-28 through 13-1-199, NMSA 1978) imposes civil and criminal penalties for its violation.

Assignment of Antitrust Claims:
The Contractor agrees that any and all claims that the Contractor may have or that may inure to the Contractor for overcharges resulting from antitrust violations as to goods, services, and materials purchased in connection with this Bid are hereby assigned to the State of New Mexico, but only to the extent that such overcharges are passed on to the State. The Contractor further agrees to require each of its Suppliers, Subcontractors, and Sub subcontractors to assign any and all such claims for overcharges to the State by executing an assignment on the form provided by the Owner for such purpose. The executed form (see Section 00600-7) shall be submitted prior to the commencement of the Work or the supplying of any materials by the Supplier, Subcontractor, or Sub subcontractor. The submission of this executed form may be waived by the Owner upon a showing of a good-faith effort by the Contractor to obtain agreement in writing from his Supplier, Subcontractor, or Sub subcontractor. Waiver by the Owner may not unreasonably be denied.

It is agreed that the Contractor retains all rights to any such antitrust claims to the extent of any overcharges not passed on to the State, including the right to any treble damages attributable thereto.

Subcontractors:
Subcontractors are allowed to work on this contract *only* with written prior approval by the agency contracting for the work. Subcontractors' activities must be defined, and the cost of their work broken out on a separate line(s) on the quote. *The subcontractor's quote must follow the price agreement item breakdown and have materials itemized.* If a subcontractor's quote is included in the accepted primary contractor's quote, then subcontractor approval is implied. If a contractor desires to change the subcontractor after contract award, written approval must be obtained from user agency.

The Primary contractor will be wholly responsible for the entire performance of the subcontractor and must adequately supervise the work of the subcontractor to ensure that the quality of their work meets the State's standards. Subcontractors are subject to the same applicable licensing and insurance coverage as the primary contractor. Subcontractors who have been suspended or debarred from doing state or federal work may not be used by the Primary Contractor.

The awarded contractor is prohibited from adding markups for subcontracted work.

Payment Provisions:
Within fifteen (15) days after the date the Department receives written notice from the Contractor that payment is requested for services, construction or items of tangible personal property delivered on site and received, the Department shall issue a written certification of complete or partial acceptance or rejection of the services, construction, or items of tangible personal property. If the Department finds that the services, construction, or items of tangible personal property are not acceptable, it shall, within thirty (30) days after the date of receipt of written notice from the Contractor that payment is requested, provide to the Contractor, a letter of exception explaining the defect or objection to the services,

DocuSign Envelope ID: EDCD97EE-B020-479E-BF6A-7058AE6341AF

construction, or delivered tangible personal property along with the details of how the Contractor may proceed to provide remedial action.

Upon certification by the Department that the services, construction, or delivered tangible personal property have been received and accepted, payment shall be tendered to the Contractor within twenty-one (21) days after the date of certification. If payment is made by mail, the payment shall be deemed tendered on the date it is postmarked. After the twenty-first (21st) day from the date that written certification of acceptance is issued, late payment charges shall be paid on the unpaid balance due on the contract to the Contractor at the rate of one- and one-half percent (1-1/2%) per month. For purchases funded by state or federal grants to local public bodies, if the local public body has not received the funds from the federal or state funding agency but has already certified that the services or items of tangible personal property have been received and accepted, payments shall be tendered to the Contractor within five (5) working days of receipt of funds from that funding agency. Final payment shall be made within twenty-one (21) days after the work has been approved and accepted by the Department's Secretary or his duly authorized representative.

The Contractor agrees to comply with state laws and rules pertaining to Workers' Compensation Insurance coverage for its employees. If Contractor fails to comply with the Workers' Compensation Act and applicable rules when required to do so, the Price Agreement may be cancelled effective immediately.

Scope of Work:
The contractor for this work shall provide all materials, labor, tools, and equipment, and pay for any permits and fees necessary to perform the work. All work shall be in strict compliance with the national and state electrical code.

The owner shall provide, at a minimum, a detailed scope of work and/or drawings, generally defining the electrical work required for the project.

This contractor shall be capable of providing all new or upgrades to the existing electrical service and systems, diagnostic services, perform trouble shooting services for the owner and to prepare proposals for all costs and services needed to perform the work required, in compliance with the national and state electrical codes.

The work shall include the repair, replacement, or extension of electrical systems within, attached to or servicing buildings or sites above ground or underground. The work shall include, but not be limited to: installation of new power and lighting circuits; new power services; new electrical devices, equipment and lighting fixtures; and any other related electrical work. Work shall also include the removal and disposal of existing power circuits, lighting fixtures and equipment, and the termination of associated circuits and services. Any related work required to accomplish the requested electrical work is included. Low voltage work could be included.

All work shall be performed in a neat and workmanlike manner, while maintaining the work area(s) in a clean condition. All work shall be completed in strict compliance with industry standards, by workers trained and certified to perform the work. All materials shall be new and of the highest quality available for the type of work being performed.

The contractor shall provide all protective coverings necessary to protect existing finishes and improvements which are in the area where the new work will occur.

The contractor shall restore any damage to existing finishes. Restoration work shall be inconspicuous with existing finishes.

The contractor shall provide all clean-up for its operations. All hazardous and non-hazardous construction debris shall be removed from the work areas and disposed of at an approved waste disposal site. The owner's trash container for the building shall not be used for disposal of construction debris.

DocuSign Envelope ID: EDCD97EE-B020-479E-BF6A-7058AE6341AF

Labor:
Personnel working on the project and providing these services shall be experienced in all areas related to this work and required by this contract. Journeymen level personnel shall have the ability and necessary skills to diagnosis problems and to make the appropriate decisions needed to provide these services.

Work is to be warrantied against defects in materials and workmanship for a period of one year from the date of completion and acceptance by the owner or using agency.

Hourly rates are requested for the three levels of personnel as follows.

- Journeyman: a person licensed by the State of New Mexico as a journeyman in the specialized field of work required and being performed on this project.
- Apprentice: a person with substantial experience in this field of work, but not yet licensed as a journeyman.
- Laborer: a person with minimal experience, performing simple tasks such as clean-up and other minor forms of labor.
- Other Labor: Hourly rates for other direct personnel that may be anticipated during the course of this contract should be added under other labor categories listed in the bid documents.

Materials, Subcontracts and Other Associated Costs:
Materials, subcontracts, and other associated costs necessary to perform the work stipulated in the scope of work shall be itemized with pricing. After acceptance of the costs identified in this section by the Agency, those costs shall be treated as provided in the section on Firm Lump Sum Fixed Price. If there is to be a discount on the retail materials, the quote must show the discount.

All material specified in the quote regardless of whether incorporated in the work shall be deemed included as paid for by the Owner or Agency. As such, any unused materials shall be turned over to the owner or agency for whom the work was provided. The State of New Mexico requires that all materials shall be new and of the highest quality and at the best attainable price available for the type of work being performed.

Awarded contractors are ***prohibited*** from adding markups for materials, subcontractors, equipment rental or any associated costs. Profit and overhead markups are not permitted.

Equipment Rental:
If special equipment is required to perform the work required, the Contractor may quote the cost of said equipment with no markup.

Quote Request:
When a service is needed, the using agency shall provide, at a minimum, a detailed scope of work and/or drawings defining the work required.

The contractor shall visit the site and compare the owner's scope of work and/or drawings to the existing conditions and provide all services called for in addition to the requirements set forth in this price agreement.

The contractor will be required to provide a written quote at no cost to the State, to include the work to be performed as well as the number of days required for the completion of the project and submit it to the using agency or local public body.

Change Orders:
Change Orders are lump sum amounts which are added to the Purchase Order as a line item or put into a new Purchase Order. They are to be used for unforeseen conditions or Agency identified but un-estimated work. When they are quantified and identified, the resultant cost must be submitted to the Agency with subcontractor quotes. No extra work can be started until the Change Order is approved in writing and the Purchase Order is approved.

DocuSign Envelope ID: EDCD97EE-B020-479E-BF6A-7058AE6341AF

Written justification shall accompany the request. The justification shall include the reason, the scope, the history of the issue, the place of the work and any other relevant details.

Work Commencement:
Prior to commencement of any work performed the User Agency will issue a notice to proceed for the work upon receipt of a purchase order, based on the prices set forth by vendor's quote. The contractor is required to submit a work schedule which will indicate the approximate completion date of the project. It should be updated with any changes as the work proceeds. The contractor shall begin the work based on the priority identified by the using agency. Any delay beyond the stated completion date shall be upon agreement by the owner and the contractor. If submittals or shop drawings are required, then they must be approved before the relevant work is started.

The Contractor shall supervise and direct the work. He shall be solely responsible for all construction means, methods, techniques, sequences, and procedures and for coordinating all portions of the work under the project. The contractor shall be responsible to the user agency for the acts and omissions of his employees and, if prior approved, Subcontractors and their agents and employees and other persons performing any of the work under a contract with the Contractor.

Where work is to be conducted in a state correctional or secured facility, security clearances and background checks that may be required by the facility for the contractor and its employees must be obtained prior to commencement of any work at that facility. The using agency reserves the right to deny any employee of the contractor access to the facility should the employee be in violation of any criteria required for the security clearance.

The user agency or local public body reserves the right to provide an escort and/or full-time supervision of the contractor and its employees during any or all phases of a project, should the user agency feel it is in its best interest to provide these extraordinary security services.

The user agency or local public body reserves the right to escort any or all employees of the contractor off its property, for any inappropriate conduct or actions that jeopardize the safety, security or well-being of the facility. Inappropriate behavior by the contractor, its employees or subcontractors shall immediately cancel this contract. Any employee of the contractor found in violation of any law, while on the user agency's property, will be prosecuted.

The user agency or local public body may order the Contractor to stop the work or a portion of it if the contractor fails to correct defective work or persistently fails to carry out the work. The user agency would do so in writing with justifications with the knowledge that if the 'stop work' was not sufficiently justified, the contractor may be owed for demobilizing and remobilizing.

Review of Project Documents:
The contractor shall carefully study and compare the project documents and shall report at once to the user agency any error, inconsistency, or omission he may discover. If this occurs during the work, the contractor shall not continue the related work until the issue is resolved.

Safety:
The Contractor is responsible for initiating, maintaining, and supervising all safety precautions and programs in connection with the work. This includes precautions to prevent damage, injury or loss to: 1) all employees on the work and all other persons who may be affected thereby, 2) all the work an all materials and equipment to be incorporated therein, whether in storage on or off site, under the care, custody or control of the Contractor or any of his Subcontractors or sub-Subcontractors, 3) other property at the site or adjacent thereto, including trees, shrubs, lawns, walks, pavements, roadways, structures and utilities not designated for removal, relocation or replacement in the course of construction.

The contactor shall erect and maintain, as required by existing conditions and progress of work all reasonable safeguards for safety and protection, including posting danger signs and other warnings against hazards, promulgating safety

DocuSign Envelope ID: EDCD97EE-B020-479E-BF6A-7058AE6341AF

regulations, and notifying agencies and users of adjacent utilities. All OSHA regulations shall be followed as well as any other Codes which pertain to safety procedures.

Payments:
Contractors shall submit invoices or pay requests at regular intervals but not less than once a month. Pay requests will be based on Lump Sum Fixed Price and percent of project completion. If there are anticipated to be more than several pay applications for the project, then a schedule of values must be submitted and approved after the Notice to Proceed is issued.

Close-out Documents:
Substantial completion will occur when the contractor considers the work to be substantially complete and the agency concurs. Substantial completion means that the user agency can occupy or utilize the work/area. The contractor is responsible for creating a list of items still to be completed or corrected. The user agency must approve the list. When the work is finally complete and inspected and accepted by the user agency, the final pay application may be submitted along with any required close-out documents. Such documents might include the certificate of occupancy, the permit signed off by CID, Lien releases, Consent of Surety, as-built drawings, warranty certificates, maintenance & Operations manuals, and verification of user training.

Warranties:
The Contractor warrants to the user agency that all work and all materials and equipment furnished under this price agreement will be of good quality, free from defects and faults and in conformance with the Project documents. All work not conforming to these requirements, including substitutions not properly approved and authorized, may be considered defective. If required by the user agency, the contractor shall furnish satisfactory evidence as to the kind and quality of the materials and equipment. Unless otherwise specified, the contractor's workmanship, materials and equipment will be warranted for a period of one year beginning at the agreed upon date of substantial completion.

Contractor Required Information:
No person shall act as a contractor without a license issued by the Construction Industries Division, classified to cover the type of work to be performed. No bid on a contract shall be submitted unless the contractor has the appropriate valid contractor's license issued by the Construction Industries Division to bid and to perform the type of work to be undertaken, as set forth in § 60-13-12, NMSA 1978. *

New Mexico Public Works Registration No **: _____

Contractor's New Mexico License No.*: _____

Contractor Classification No.: _____

State Tax ID No.: _____

Federal Taxpayer ID No.: _____

****Pursuant to: 13-4-13.1 Public Works Contracts; Registration of Contractors and Subcontractors**

When submitting a quote for a specific project valued at more than sixty thousand dollars ($60,000) for any portion of a public works project greater than sixty thousand dollars ($60,000) that is subject to the New Mexico Public Works Act, the Contractor is required to be registered with the Labor and Industrial Division of the Department of Workforce Solutions prior to submitting its quote. The using agency may reject any quote that fails to provide a Public Works Registration Number for the prime Contractor and all other listed Contractors or subcontractors. In order to submit a bid for this invitation to bid the bidder must have an Active registration for the Public Works Act.

DocuSign Envelope ID: EDCD97EE-B020-479E-BF6A-7058AE6341AF

The Contractor will be contacted on an as needed, on-call basis to perform work associated with this Price Agreement. A Price Agreement award is without assurance of quantity or dollar amount of work to be performed. Failure to respond to the Using Agency's requests may be grounds for termination of this Price Agreement. Awards for these services will be made on a statewide basis. If the awarded contractor does not wish to travel to other parts of the State, it is acceptable to decline work.

Regular Working Hours and After Hours Defined:
Regular Working Hours are defined as Monday through Friday 8 am through 5 pm local time.
After hours are defined as hours outside of Regular Working Hours.

*****End of Specifications*****

DocuSign Envelope ID: EDCD97EE-B020-479E-BF6A-7058AE6341AF

Items:

Item	Approx. Qty.	UOM	Article and Description	Unit Price	Awarded Vendor
1	**1**	**Hourly**	**Hourly Labor Rate, Certified, Licensed Journeyman, Regular Hours Worked, Non-Wage Decision Project.**		
				$70.00	**AA**
				$110.00	**AB**
				$86.00	**AC**
				$88.00	**AD**
				$171.00	**AE**
				$75.00	**AG**
				$90.00	**AF**
				$125.00	**AH**
				$95.00	**AI**
				$85.00	**AJ**
				$105.00	**AK**
				$84.09	**AL**
				$125.66	**AM**
				$125.00	**AN**
				$75.00	**AO**
				$78.54	**AP**
				$85.00	**AQ**
				$97.00	**AR**
				$83.50	**AS**
2	**1**	**Hourly**	**Hourly Labor Rate, Certified, Licensed Journeyman, Regular Hours Worked, Wage Decision Project.**		
				$80.00	**AA**
				$110.00	**AB**
				$88.00	**AC**
				$88.00	**AD**
				$199.00	**AE**
				$85.00	**AG**
				$90.00	**AF**
				$150.00	**AH**
				$105.00	**AI**
				$90.00	**AJ**
				$105.00	**AK**
				$92.93	**AL**
				$125.66	**AM**
				$125.00	**AN**
				$85.00	**AO**
				$94.62	**AP**
				$95.00	**AQ**
				$97.00	**AR**
				$82.00	**AS**

DocuSign Envelope ID: EDCD97EE-B020-479E-BF6A-7058AE6341AF

Item	Approx. Qty.	UOM	Article and Description	Unit Price	Awarded Vendor
3	**1**	**Hourly**	**Hourly Labor Rate, Certified, Licensed Journeyman, After Hours Worked, Non-Wage Decision Project.**		
				$105.00	**AA**
				$115.00	**AB**
				$129.00	**AC**
				$120.00	**AD**
				$276.00	**AE**
				$95.00	**AG**
				$124.00	**AF**
				$225.00	**AH**
				$135.00	**AI**
				$85.00	**AJ**
				$145.00	**AK**
				$126.17	**AL**
				$168.82	**AM**
				$250.00	**AN**
				$95.00	**AO**
				$102.10	**AP**
				$85.00	**AQ**
				$146.00	**AR**
			Not including Holiday or Sundays	**$125.25**	**AS**
4	**1**	**Hourly**	**Hourly Labor Rate, Certified, Licensed Journeyman, After Hours Worked, Wage Decision Project.**		
				$120.00	**AA**
				$115.00	**AB**
				$131.00	**AC**
				$120.00	**AD**
				$294.00	**AE**
				$100.00	**AG**
				$124.00	**AF**
				$250.00	**AH**
				$150.00	**AI**
				$95.00	**AJ**
				$145.00	**AK**
				$139.40	**AL**
				$168.82	**AM**
				$250.00	**AN**
				$110.00	**AO**
				$118.18	**AP**
				$95.00	**AQ**
				$146.00	**AR**
			Not including Holiday or Sundays	**$123.00**	**AS**

DocuSign Envelope ID: EDCD97EE-B020-479E-BF6A-7058AE6341AF

Item	Approx. Qty.	UOM	Article and Description	Unit Price	Awarded Vendor
5	**1**	**Hourly**	**Hourly Labor Rate, Experienced Apprentice, Regular Hours Worked, Non-Wage Decision Project.**		
				$60.00	**AA**
				$40.00	**AB**
				$69.50	**AC**
				$61.00	**AD**
				$129.00	**AE**
				$48.00	**AG**
				$70.00	**AF**
				$100.00	**AH**
				$70.00	**AI**
				$70.00	**AJ**
				$70.00	**AK**
				$72.08	**AL**
				$73.63	**AM**
				$78.64	**AN**
				$45.00	**AO**
				$48.70	**AP**
				$40.00	**AQ**
				$88.00	**AR**
				$66.00	**AS**
6	**1**	**Hourly**	**Hourly Labor Rate, Experienced Apprentice, Regular Hours Worked, Wage Decision Project.**		
				$65.00	**AA**
				$40.00	**AB**
				$69.50	**AC**
				$61.00	**AD**
				$149.00	**AE**
				$54.00	**AG**
				$70.00	**AF**
				$100.00	**AH**
				$75.00	**AI**
				$80.00	**AJ**
				$70.00	**AK**
				$79.65	**AL**
				$73.63	**AM**
				$86.30	**AN**
				$55.00	**AO**
				$64.78	**AP**
				$50.00	**AQ**
				$88.00	**AR**
				$65.00	**AS**

DocuSign Envelope ID: EDCD97EE-B020-479E-BF6A-7058AE6341AF

Item	Approx. Qty.	UOM	Article and Description	Unit Price	Awarded Vendor
7	**1**	**Hourly**	**Hourly Labor Rate, Experienced Apprentice, After Hours Worked, Non-Wage Decision Project.**		
				$70.00	**AA**
				$45.00	**AB**
				$104.80	**AC**
				$85.00	**AD**
				$207.00	**AE**
				$62.00	**AG**
				$97.00	**AF**
				$150.00	**AH**
				$90.00	**AI**
				$75.00	**AJ**
				$100.00	**AK**
				$73.17	**AL**
				$102.36	**AM**
				$157.28	**AN**
				$65.00	**AO**
				$64.71	**AP**
				$40.00	**AQ**
				$118.00	**AR**
			Not including Holiday or Sundays	**$99.00**	**AS**
8	**1**	**Hourly**	**Hourly Labor Rate, Experienced Apprentice, After Hours Worked, Wage Decision Project.**		
				$70.00	**AA**
				$45.00	**AB**
				$104.80	**AC**
				$85.00	**AD**
				$221.00	**AE**
				$72.00	**AG**
				$97.00	**AF**
				$150.00	**AH**
				$95.00	**AI**
				$85.00	**AJ**
				$100.00	**AK**
				$119.49	**AL**
				$102.36	**AM**
				$157.28	**AN**
				$85.00	**AO**
				$80.49	**AP**
				$50.00	**AQ**
				$118.00	**AR**
			Not including Holiday or Sundays	**$97.50**	**AS**

DocuSign Envelope ID: EDCD97EE-B020-479E-BF6A-7058AE6341AF

Item	Approx. Qty.	UOM	Article and Description	Unit Price	Awarded Vendor
9	**1**	**Hourly**	**Hourly Labor Rate, Laborer, Regular Hours Worked, Non-Wage Decision Project.**		
				$40.00	**AA**
				$25.00	**AB**
				$61.70	**AC**
				$53.00	**AD**
				$103.00	**AE**
				$38.00	**AG**
				$20.00	**AF**
				$75.00	**AH**
				$48.00	**AI**
				$70.00	**AJ**
				$65.00	**AK**
				$63.65	**AL**
				$15.00	**AM**
				$65.00	**AN**
				$35.00	**AO**
				$39.27	**AP**
				$25.00	**AQ**
				$88.00	**AR**
				$45.00	**AS**
10	**1**	**Hourly**	**Hourly Labor Rate, Laborer, Regular Hours Worked, Wage Decision Project.**		
				$45.00	**AA**
				$25.00	**AB**
				$61.70	**AC**
				$53.00	**AD**
				$119.00	**AE**
				$45.00	**AG**
				$30.00	**AF**
				$75.00	**AH**
				$50.00	**AI**
				$70.00	**AJ**
				$65.00	**AK**
				$70.32	**AL**
				$32.00	**AM**
				$70.00	**AN**
				$45.00	**AO**
				$54.12	**AP**
				$30.00	**AQ**
				$88.00	**AR**
				$42.00	**AS**

DocuSign Envelope ID: EDCD97EE-B020-479E-BF6A-7058AE6341AF

Item	Approx. Qty.	UOM	Article and Description	Unit Price	Awarded Vendor
11	**1**	**Hourly**	**Hourly Labor Rate, Laborer, After Hours Worked, Non-wage Decision Project.**		
				$60.00	**AA**
				$30.00	**AB**
				$92.50	**AC**
				$73.00	**AD**
				$166.00	**AE**
				$46.00	**AG**
				$35.00	**AF**
				$100.00	**AH**
				$65.00	**AI**
				$70.00	**AJ**
				$95.00	**AK**
				$64.57	**AL**
				$22.50	**AM**
				$130.00	**AN**
				$55.00	**AO**
				$47.13	**AP**
				$25.00	**AQ**
				$109.00	**AR**
			Not including Holiday or Sundays	**$67.50**	**AS**
12	**1**	**Hourly**	**Hourly Labor Rate, Laborer, After Hours Worked, Wage Decision Project.**		
				$65.00	**AA**
				$30.00	**AB**
				$92.50	**AC**
				$73.00	**AD**
				$177.00	**AE**
				$54.00	**AG**
				$45.00	**AF**
				$125.00	**AH**
				$68.00	**AI**
				$70.00	**AJ**
				$95.00	**AK**
				$70.32	**AL**
				$42.22	**AM**
				$140.00	**AN**
				$75.00	**AO**
				$61.97	**AP**
				$30.00	**AQ**
				$109.00	**AR**
			Not including Holiday or Sundays	**$63.00**	**AS**

DocuSign Envelope ID: EDCD97EE-B020-479E-BF6A-7058AE6341AF

Item	Approx. Qty.	UOM	Article and Description	Unit Price	Awarded Vendor
13	**1**	**Hourly**	**Hourly Labor Rate, Project Manager/ Supervisor.**		
				$85.00	**AA**
				$25.00	**AB**
				$95.00	**AC**
				$85.00	**AD**
				$191.00	**AE**
				$95.00	**AG**
				$100.00	**AF**
				$250.00	**AH**
				$115.00	**AI**
				$95.00	**AJ**
				$103.00	**AK**
				$100.00	**AL**
				$133.63	**AM**
				$85.00	**AN**
				$110.00	**AO**
				$102.10	**AP**
				$75.00	**AQ**
				$103.00	**AR**
				$95.00	**AS**
14	**1**	**% Disc**	**Percentage Discount Off Retail - Catalog List Price For All Parts And Materials.**	**%**	
				5%	**AA**
				5%	**AB**
				0%	**AC**
				0%	**AD**
				0%	**AE**
				10%	**AG**
			Our material pricing will always be discounted below retail. The discount will vary depending on the price given to us by our suppliers. You as our customer will always pay below retail/catalog price. Since the discount percentage will vary, we thought it was best not to lock in a certain discount percentage. This guarantees you will always get the best available discount given to us and not be limited to the percent discount listed in this spreadsheet.	**0%**	**AF**
				10%	**AH**
				10%	**AI**
				5%	**AJ**
				19%	**AK**
				0%	**AL**
				15%	**AM**
				0%	**AN**
				3%	**AO**
				0%	**AP**

DocuSign Envelope ID: EDCD97EE-B020-479E-BF6A-7058AE6341AF

Item	Approx. Qty.	UOM	Article and Description	Unit Price	Awarded Vendor
			Item 14 Continued		
				10%	**AQ**
				0%	**AR**
				28%	**AS**

***** 14 Awarded Items Total *****

DocuSign

Certificate Of Completion

Envelope Id: EDCD97EEB020479EBF6A7058AE6341AF
Status: Completed
Subject: GSD/SPD Procurement#: 40-00000-24-00074 Electrical Services Award
Source Envelope:
Document Pages: 27
Signatures: 1
Certificate Pages: 5
Initials: 2
AutoNav: Enabled
EnvelopeId Stamping: Enabled
Time Zone: (UTC-07:00) Mountain Time (US & Canada)

Envelope Originator:
James Ortega
1100 S Saint Francis Dr
Santa Fe, NM 87502
james.ortega@gsd.nm.gov
IP Address: 164.64.63.2

Record Tracking

Status: Original
6/20/2024 9:36:33 AM
Holder: James Ortega
james.ortega@gsd.nm.gov
Location: DocuSign

Security Appliance Status: Connected
Pool: StateLocal

Storage Appliance Status: Connected
Pool: GSD
Location: DocuSign

Signer Events	Signature	Timestamp
Tami Concha Tami.Concha@gsd.nm.gov Const. Supervisor New Mexico General Services, State Purchasing Division Security Level: Email, Account Authentication (None), Login with SSO **Electronic Record and Signature Disclosure:** Not Offered via DocuSign	TC Signature Adoption: Pre-selected Style Using IP Address: 164.64.62.10	Sent: 6/20/2024 9:39:34 AM Viewed: 6/20/2024 9:41:12 AM Signed: 6/20/2024 9:41:46 AM
James Ortega james.ortega@gsd.nm.gov Security Level: Email, Account Authentication (None) **Electronic Record and Signature Disclosure:** Accepted: 10/24/2022 4:00:52 PM ID: b93eca54-15f4-4d91-9a9f-2dee3ce43c35	JO Signature Adoption: Pre-selected Style Using IP Address: 164.64.62.10	Sent: 6/20/2024 9:41:49 AM Viewed: 6/20/2024 9:58:27 AM Signed: 6/20/2024 9:58:31 AM
Dorothy Mendonca dorothy.mendonca@gsd.nm.gov SPD Division Director / State Purchasing Agent General Services Department Signing Group: 35000 - State Purchasing Agent Security Level: Email, Account Authentication (None) **Electronic Record and Signature Disclosure:** Accepted: 4/14/2023 7:24:59 AM ID: 51f6380f-50f7-4227-afb5-572b373dfb7c	Dorothy Mendonca Signature Adoption: Pre-selected Style Using IP Address: 164.64.62.10	Sent: 6/20/2024 9:58:34 AM Viewed: 6/20/2024 10:03:29 AM Signed: 6/20/2024 10:03:35 AM

In Person Signer Events	Signature	Timestamp

Editor Delivery Events	Status	Timestamp

Agent Delivery Events	Status	Timestamp

Intermediary Delivery Events	Status	Timestamp

Certified Delivery Events	Status	Timestamp

Carbon Copy Events	Status	Timestamp

Witness Events	Signature	Timestamp

Notary Events	Signature	Timestamp

Envelope Summary Events	Status	Timestamps
Envelope Sent	Hashed/Encrypted	6/20/2024 9:39:34 AM
Certified Delivered	Security Checked	6/20/2024 10:03:29 AM
Signing Complete	Security Checked	6/20/2024 10:03:35 AM
Completed	Security Checked	6/20/2024 10:03:35 AM

Payment Events	Status	Timestamps

Electronic Record and Signature Disclosure

ELECTRONIC RECORD AND SIGNATURE DISCLOSURE

A. ELECTRONIC RECORD AND SIGNATURE DISCLOSURE (ERSD)

From time to time, New Mexico General Services Department (GSD), on behalf of the State of New Mexico (SONM), may be required by law to provide you with certain written notices or disclosures. Stated below are the terms and conditions for GSD's providing you such notices and disclosures electronically through the DocuSign system. Please read this information carefully. If you are able to access this information electronically and agree to **this Electronic Record and Signature Disclosure (ERSD)**, please confirm your agreement by selecting the check-box next to "I agree to use electronic records and signatures" before clicking "CONTINUE" within the DocuSign system.

B. Obtaining paper copies

At any time up to twenty (20) calendar days following your use of DocuSign to electronically sign a document, you may request a paper copy of any record provided or made available electronically to you by GSD. You will have the ability to download and print documents SONM sends you through the DocuSign system during and immediately after the signing session and, if you elect to create a DocuSign account, you may access the documents for a twenty (20) calendar day period after such documents are first sent to you. Following the twenty (20) day period, if you want GSD to send you paper copies of any such documents from GSD's office, you will be charged a $1.00 per-page fee plus postage. You may request delivery of such paper copies from GSD by following the procedure stated in Section H, below.

C. Withdrawing your consent

If you decide to receive notices and disclosures from GSD electronically, you may at any time change your mind and inform GSD you want to receive required notices and disclosures only in paper format. The procedure concerning how you may inform GSD of your decision to receive future notices and disclosures in paper format as well as withdraw your consent to receive notices and disclosures electronically is stated in Section D, immediately below.

D. Consequences of changing your mind

If you elect to receive required notices and disclosures only in paper format, it will slow the speed with which GSD will be able to complete certain steps in specific transactions and deliver paper copies to you. GSD will need: (1) to send the required notices or disclosures to you in paper format; and (2) wait until GSD receives your acknowledgment of your receipt of such paper notices or disclosures. Further, you will no longer be able to use the DocuSign system to receive required notices and consents electronically from SONM or to electronically sign documents generated and sent to you from SONM.

E. All notices and disclosures will be sent to you electronically

Unless you inform GSD otherwise according to these procedures, GSD will electronically provide you through the DocuSign system all required notices, disclosures, authorizations, acknowledgements and other documents that are required to be provided or made available to you during the course of your electronic signature relationship with SONM. To reduce the possibility of inadvertent non-receipt, GSD prefers to provide all required notices and disclosures by the same method and to the same email or physical address that you furnish to GSD. Thus, you may receive the disclosures and notices electronically or in paper form. If you do not agree with this procedure, please inform GSD according to the procedures stated in Section I, below. Please also refer to Section D, immediately above, which states the consequences resulting from your declination of electronic delivery of notices and disclosures.

F. How to contact GSD:

You may inform General Services Department (GSD) of any changes you select regarding State Purchasing Division's (SPD) electronic communications with you, to request paper copies of certain information from SPD, and to withdraw your prior consent to receive notices and disclosures electronically by emailing your request(s) to SPD at: *GSD.SPDinfo@state.nm.us*

G. To advise SPD of your new email address

To inform SPD of a change in the email address to which SPD sends you notices and disclosures electronically, you must send an email to SPD at *GSD.SPDinfo@state.nm.us* and in the body of such request you must include your previous and new email addresses.

H. To request paper copies from SPD

To request delivery of paper copies of electronic notices and disclosures that DocuSign and/or SPD have previously provided to you, you must send an email to SPD at *GSD.SPDinfo@state.nm.us* and in the body of your email request state your email address, full name, mailing address, and telephone number. SPD will charge you a $1.00 per page copy fee plus postage.

I. To withdraw your consent with SPD

To inform SPD that you no longer wish to receive notices and disclosures in electronic format you may:

(1) Decline to sign a document from within a signing session, and on the subsequent page, select the check-box indicating you wish to withdraw your consent, or you may:

(2) Send SPD an email to *GSD.SPDinfo@state.nm.us* and in the body of your request state your email address, full name, mailing address, and telephone number.

J. Required hardware and software

The minimum system requirements for using the DocuSign system may change over time. The current DocuSign system requirements may be found at:
https://support.docusign.com/guides/signer-guide-signing-system-requirements

K. Acknowledging your access and consent to receive and sign documents electronically

To confirm that you are able to electronically access the information contained in this Electronic Record and Signature Disclosure (ERSD), please confirm that you have: (1) read this ERSD, and either: (2) you are able to print on paper or electronically save this ERSD for your future reference and access; or (3) you are able to email this ERSD to an email address where you will be able to print this ERSD on paper and/or save this ERSD for your future reference and access. Further, if you consent to receiving notices and disclosures from DocuSign and/or SPD exclusively in electronic format, then select the check-box next to "I agree to use electronic records and signatures," before you click "CONTINUE" within the DocuSign system.

By selecting the check-box next to "I agree to use electronic records and signatures," you confirm that:

- You have read this Electronic Record and Signature Disclosure (ERSD); and
- You can print this ERSD on paper, or you can save and/ or send this ERSD to a location where you can print this ERSD, for your future reference and access; and
- Until or unless you notify SPD as stated in this ERSD, you consent to exclusively receive through electronic means all notices, disclosures, authorizations, acknowledgements, and other documents that are required to be provided or made available to you by SPD during the course of your electronic signature relationship with SPD.

CERTIFICATE OF LIABILITY INSURANCE

DATE (MM/DD/YYYY): 07/14/2025

THIS CERTIFICATE IS ISSUED AS A MATTER OF INFORMATION ONLY AND CONFERS NO RIGHTS UPON THE CERTIFICATE HOLDER. THIS CERTIFICATE DOES NOT AFFIRMATIVELY OR NEGATIVELY AMEND, EXTEND OR ALTER THE COVERAGE AFFORDED BY THE POLICIES BELOW. THIS CERTIFICATE OF INSURANCE DOES NOT CONSTITUTE A CONTRACT BETWEEN THE ISSUING INSURER(S), AUTHORIZED REPRESENTATIVE OR PRODUCER, AND THE CERTIFICATE HOLDER.

IMPORTANT: If the certificate holder is an ADDITIONAL INSURED, the policy(ies) must have ADDITIONAL INSURED provisions or be endorsed. If SUBROGATION IS WAIVED, subject to the terms and conditions of the policy, certain policies may require an endorsement. A statement on this certificate does not confer rights to the certificate holder in lieu of such endorsement(s).

PRODUCER	CONTACT NAME: Susan Grant	
Downey & Company 6565 AMERICAS PARKWAY NE SUITE 750 ALBUQUERQUE NM 87110	PHONE (A/C, No, Ext): (505) 980-9177	FAX (A/C, No):
	E-MAIL ADDRESS: sgrant@downeyandco.com	

INSURED	INSURER(S) AFFORDING COVERAGE	NAIC #
U.S. Electrical Corporation 301 California St. SE Albuquerque NM 87108	INSURER A : Hartford Fire Insurance Company	19682
	INSURER B : Trumbull Insurance Company	27120
	INSURER C : Hartford Casualty Insurance Company	29424
	INSURER D : Pacific Insurance Company Ltd	10046
	INSURER E :	
	INSURER F :	

COVERAGES **CERTIFICATE NUMBER:** 25/26 Master **REVISION NUMBER:**

THIS IS TO CERTIFY THAT THE POLICIES OF INSURANCE LISTED BELOW HAVE BEEN ISSUED TO THE INSURED NAMED ABOVE FOR THE POLICY PERIOD INDICATED. NOTWITHSTANDING ANY REQUIREMENT, TERM OR CONDITION OF ANY CONTRACT OR OTHER DOCUMENT WITH RESPECT TO WHICH THIS CERTIFICATE MAY BE ISSUED OR MAY PERTAIN, THE INSURANCE AFFORDED BY THE POLICIES DESCRIBED HEREIN IS SUBJECT TO ALL THE TERMS, EXCLUSIONS AND CONDITIONS OF SUCH POLICIES. LIMITS SHOWN MAY HAVE BEEN REDUCED BY PAID CLAIMS.

INSR LTR	TYPE OF INSURANCE	ADDL INSD	SUBR WVD	POLICY NUMBER	POLICY EFF (MM/DD/YYYY)	POLICY EXP (MM/DD/YYYY)	LIMITS	
A	[X] COMMERCIAL GENERAL LIABILITY [ ] CLAIMS-MADE [X] OCCUR GEN'L AGGREGATE LIMIT APPLIES PER: [ ] POLICY [X] PRO-JECT [ ] LOC [ ] OTHER:	Y		34UEABB5YT1	01/01/2025	01/01/2026	EACH OCCURRENCE DAMAGE TO RENTED PREMISES (Ea occurrence) MED EXP (Any one person) PERSONAL & ADV INJURY GENERAL AGGREGATE PRODUCTS - COMP/OP AGG	$ 1,000,000 $ 100,000 $ 5,000 $ 1,000,000 $ 2,000,000 $ 2,000,000
B	AUTOMOBILE LIABILITY [X] ANY AUTO [ ] OWNED AUTOS ONLY [ ] SCHEDULED AUTOS [ ] HIRED AUTOS ONLY [ ] NON-OWNED AUTOS ONLY			34UEABB5YTT	01/01/2025	01/01/2026	COMBINED SINGLE LIMIT (Ea accident) BODILY INJURY (Per person) BODILY INJURY (Per accident) PROPERTY DAMAGE (Per accident)	$ 1,000,000 $ $ $
C	[X] UMBRELLA LIAB [X] OCCUR [ ] EXCESS LIAB [ ] CLAIMS-MADE [ ] DED [X] RETENTION $ 10,000			34XHABB6CMM	01/01/2025	01/01/2026	EACH OCCURRENCE AGGREGATE	$ 5,000,000 $ 5,000,000
A	WORKERS COMPENSATION AND EMPLOYERS' LIABILITY ANY PROPRIETOR/PARTNER/EXECUTIVE OFFICER/MEMBER EXCLUDED? (Mandatory in NH) Y / N: N If yes, describe under DESCRIPTION OF OPERATIONS below	N / A		34WEABB5YS9	01/01/2025	01/01/2026	[X] PER STATUTE [ ] OTH-ER E.L. EACH ACCIDENT E.L. DISEASE - EA EMPLOYEE E.L. DISEASE - POLICY LIMIT	 $ 1,000,000 $ 1,000,000 $ 1,000,000
D	Professional / Pollution Liability			34CPIAC9488	01/01/2025	01/01/2026	Policy Aggregate Each Incident	$2,000,000 $1,000,000

DESCRIPTION OF OPERATIONS / LOCATIONS / VEHICLES (ACORD 101, Additional Remarks Schedule, may be attached if more space is required)

Re: Santa Fe City Hall - Elevator modernization

CERTIFICATE HOLDER

City of Santa Fe
200 Lincoln Avenue
Santa Fe NM 87501

CANCELLATION

SHOULD ANY OF THE ABOVE DESCRIBED POLICIES BE CANCELLED BEFORE THE EXPIRATION DATE THEREOF, NOTICE WILL BE DELIVERED IN ACCORDANCE WITH THE POLICY PROVISIONS.

AUTHORIZED REPRESENTATIVE

Christian B Downey

© 1988-2015 ACORD CORPORATION. All rights reserved.

Services Offered to the City of Santa Fe (FY26)

Approved:
These services have been approved by the New Mexico Council for Purchasing from Persons with Disabilities and are available through Horizons of New Mexico.

- ADA Accessibility Consulting Services
- Auctioneering Services
- Bulk Mailing and Sorting
- Call Center Services
- Computer Refurbishing
- Courier Services
- Decontamination, Sanitation and Sterilization Services
- Debris Removal
- Document Imaging
- Document Shredding
- Envelope Stuffing
- General Labor
- Hard Drive Destruction
- Janitorial and Housekeeping Services – Including Carpet Cleaning & Floor Care
- Landscape Irrigation
- Landscaping
- Mailing Services
- Management of an Assistive Technology Reuse and Recycling Program
- Medical Waste Disposal
- Meeting Minute Preparation Services
- Pest Control and Extermination Services
- Printing Services
- Rest Area Maintenance
- Screen Printing
- Snow Removal
- Temporary Staffing Services
- Yard, Grounds, and Lawn Maintenance

Permissive:
The services have been approved by the New Mexico Council for Purchasing from Persons with Disabilities as permissible for sale under the State Use Act through Horizons of New Mexico. While the Council recognizes that certain Horizons of New Mexico members are capable of performing the services listed below, said services are considered permissive and excluded from the mandatory aspect of the State Use Program. Any procurement of the below services through Horizons of New Mexico is at the discretion of the purchasing agent and will be considered by the Council on a case-by-case basis.

- Graphic Design
- Graphic Design - Logo Design
- IT – Enterprise Application
- IT – IV & V
- IT Network and Database Management
- IT Support
- IT Security Services
- IT – Web Design
- IT – Web Programmer
- Marketing
- Social Media Marketing

For the complete State Use service list, please go to: http://horizonsofnewmexico.org/services.html

From: DUTTON-LEYDA, TRAVIS K.
To: KAHAHANE, ELIZABETH L.; Purchasing DET
Subject: RE: Determination Request – On-call Electrical and Elevator Maintenance Services
Date: Monday, October 27, 2025 4:34:52 PM
Attachments: image002.png
image004.png

Hi Lisa, Yes.

Based on the provided scope of work, it has been classified as General Services. This determination is solely focused on that classification and does not address whether the scope of work or procurement method complies with all relevant legal requirements. I reserve the right to modify this determination should the scope of work differ from what was originally submitted. The procurement must follow the processes and procedures established by the City of Santa Fe, Central Purchasing, the Procurement Manual, and applicable state statutes. Please note:

- Save this email as a PDF and upload it into the corresponding packet and Munis records.
- Check with WorkQuest dba Horizons of New Mexico (vendor # 8673) (mloehman@horizonsofnewmexico.org) ***if*** this service appears on their approved list.
- If your request includes anything that needs to be reviewed and preapproved by another City Department/Division, please send the same SOW to the corresponding email address and include their response in your packet/Munis.
- If your request includes anything that needs to be reviewed and preapproved by another City Department/Division, please send the same SOW to the corresponding email address and include their response in your packet/Munis.
    - Treasury (Point of Sale Systems) – questions: drsena@santafenm.gov; clromero@santafenm.gov. Request signature from: clromero@santafenm.gov
    - IT components (everything IT) – questions: ereview@santafenm.gov. Request signature from: edcandelaria@santafenm.gov;
      Copy: zxdushdurova@santafenm.gov; lenobes@santafenm.gov; lfworstell@santafenm.gov
    - Vehicles – questions: fleet@santafenm.gov. Request signature from: dmjaramillo@santafenm.gov
    - Grants – questions: grants@santafenm.gov. Request signature from: evlujan@santafenm.gov
    - Construction, Facilities, Furniture, Fixtures, Equipment, etc. – questions: fmdreview@santafenm.gov. Request signature from: jsburnett@santafenm.gov
    - Emergency Related Purchases – questions oem@santafenm.govand. Request signature from: klmorgan@santafenm.gov
    - Asset over $5k – questions: accountspayable@santafenm.gov. Request signature from: jxbolden@santafenm.gov

- Ensure that the current and appropriate templates and forms are used, they can be found on the intranet https://intranet.santafenm.gov/finance_1 and OpenGov https://procurement.opengov.com/governments/1784201/projects and documented procedures/laws/rules are followed.
- > $20k per year, when processing this procurement, please ensure the procurement number issued by Munis and the procurement name are used in the appropriate documents and the subject of emails.
- If you are processing a procurement where the forecasted amount is =/> $60k, per NMSA 1978, Section 13-1-102, the procurement method must be ITB (if you choose not to use a cooperative or an existing contract). If you feel you need to process an RFP, you must get an Authorization and Plan approved before you process.
- < $20k per year, one quote is acceptable.
- From $20k to $60k per year, if you aren't using a cooperative or existing contract, you must provide 3 quotes in your req. Must use the Munis Bid Module, OpenGov, or Pavilion.
- **Identify your funding source and notify Purchasing.**
  It's essential to determine the funding source early, as it impacts the required documentation and contract language. For example, if federal funds are being used, specific federal provisions must be included in both the procurement request and the resulting contract. Notifying Purchasing of the funding source upfront ensures compliance and avoids delays.
- Follow the link below to review existing price agreements, contracts, or cooperative agreements that might be applicable to this request. You might be able to use an existing price agreement/contract to save time and money.
- Pavilion: Free Cooperative Contract Search for Governments (please work with Purchasing if you think you found an existing or cooperative contract that might work)
- Submit via **Submit Purchase Requests** or the appropriate email address:
- Determination requests to purchasing_det@santafenm.gov
- All other requests to purchasing@santafenm.gov

Thank you for submitting this scope of work for my review.

Book time to meet with me

Regards,
Travis Dutton-Leyda, City of Santa Fe Chief Procurement Officer
200 Lincoln Avenue
Santa Fe, NM 87501
505-629-8351
tkduttonleyda@santafenm.gov

Vendor Registration Sites and Current Procurement Opportunities:
[Current for Finances Only] https://santafenm.munisselfservice.com/vss/

[We Are Live With OpenGov] https://procurement.opengov.com/portal/santafenm
[Current] https://www.withpavilion.com/
Internal Link: https://intranet.santafenm.gov/central_purchasing_division_cpd

CITY OF SANTA FE
FINANCE

"A journey of a thousand miles begins with a single step" ~ Lao Tzu

---

From: KAHAHANE, ELIZABETH L. <elkahahane@santafenm.gov>
Sent: Monday, October 27, 2025 12:40 PM
To: Purchasing DET <purchasing_det@santafenm.gov>
Subject: RE: Determination Request – On-call Electrical and Elevator Maintenance Services

Good afternoon,

I'm following up on this determination request…

After searching the blanket determination for 'elevator' and coming up empty, I noticed this is listed under General Services:

- Equipment installation, preventive maintenance, inspection, calibration, and repair

Would this be appropriate per the SOW below?
Thank you!

Best,
Elizabeth "Lisa" Kahahane, CPO
Contract Administrator | Facilities Division | Public Works Dept.
Email: elkahahane@santafenm.gov
M: (505) 795-2439
O: (505) 955-5934

This e-mail and any attachments may contain confidential information and/or information protected by intellectual property rights for the exclusive attention of the intended addressees. If you have received this transmission in error, please immediately notify the sender by return e-mail and delete this message and its attachments. Unauthorized use, copying or further full or partial distribution of this e-mail or its contents is prohibited.

From: KAHAHANE, ELIZABETH L.
Sent: Tuesday, October 21, 2025 9:16 AM
To: Purchasing DET <purchasing_det@santafenm.gov>

Subject: Determination Request – On-call Electrical and Elevator Maintenance Services

Aloha!

Facilities Division is requesting a SOW determination for the following:

- This Scope of Work establishes requirements for a qualified service provider to perform on-call electrical and elevator maintenance services for City of Santa Fe facilities. Work includes inspections, repairs, certifications, preventive maintenance, and emergency response.

Please let me know if additional information is required.
Thank you!

Best,
Elizabeth "Lisa" Kahahane, CPO
Contract Administrator | Facilities Division | Public Works Dept.
Email: elkahahane@santafenm.gov
M: (505) 795-2439
O: (505) 955-5934

CITY OF SANTA FE
FACILITIES

This e-mail and any attachments may contain confidential information and/or information protected by intellectual property rights for the exclusive attention of the intended addressees. If you have received this transmission in error, please immediately notify the sender by return e-mail and delete this message and its attachments. Unauthorized use, copying or further full or partial distribution of this e-mail or its contents is prohibited.

GB Packet_US Electrical_On-Call Elevators_ $541k_v2.0

Final Audit Report 2025-12-22

Created:	2025-12-17
By:	Elizabeth Kahahane (elkahahane@santafenm.gov)
Status:	Signed
Transaction ID:	CBJCHBCAABAArrEwXZnC2qFlJBQz-WQHJpE2OBXheEKc

"GB Packet_US Electrical_On-Call Elevators_$541k_v2.0" Histor y

Document created by Elizabeth Kahahane (elkahahane@santafenm.gov)
2025-12-17 - 9:45:55 PM GMT- IP address: 63.232.20.2

Document emailed to CARYN GROSSE (clgrosse@santafenm.gov) for signature
2025-12-17 - 9:48:18 PM GMT

Email viewed by CARYN GROSSE (clgrosse@santafenm.gov)
2025-12-17 - 10:22:26 PM GMT- IP address: 104.47.65.254

Document e-signed by CARYN GROSSE (clgrosse@santafenm.gov)
Signature Date: 2025-12-17 - 10:27:25 PM GMT - Time Source: server- IP address: 63.232.20.2

Document emailed to Timothy Farrell (tgfarrell@santafenm.gov) for signature
2025-12-17 - 10:27:27 PM GMT

Email viewed by Timothy Farrell (tgfarrell@santafenm.gov)
2025-12-17 - 11:43:23 PM GMT- IP address: 104.47.64.254

Document e-signed by Timothy Farrell (tgfarrell@santafenm.gov)
Signature Date: 2025-12-17 - 11:43:40 PM GMT - Time Source: server- IP address: 174.56.2.34

Document emailed to JOHN BURNETT (jsburnett@santafenm.gov) for signature
2025-12-17 - 11:43:42 PM GMT

Email viewed by JOHN BURNETT (jsburnett@santafenm.gov)
2025-12-22 - 3:16:13 PM GMT- IP address: 71.228.98.124

Document e-signed by JOHN BURNETT (jsburnett@santafenm.gov)
Signature Date: 2025-12-22 - 3:28:04 PM GMT - Time Source: server- IP address: 71.228.98.124

Powered by Adobe Acrobat Sign

Agreement completed.

2025-12-22 - 3:28:04 PM GMT

Powered by
Adobe
Acrobat Sign

GB_Packet_US_Electrical_On-Call_Elevators_$541k_v2.0

Interim Agreement Report 2026-01-05

Created:	2025-12-29
By:	RACHEL GABALDON (rdgabaldon@santafenm.gov)
Status:	Out for Signature
Transaction ID:	CBJCHBCAABAAiT6SPbl3dIKxlT9MOWlyM0ShzvjV1LJZ

Agreement History

Agreement history is the list of the events that have impacted the status of the agreement prior to the final signature. A final audit report will be generated when the agreement is complete.

"GB_Packet_US_Electrical_On-Call_Elevators_$541k_v2.0" History

Document created by RACHEL GABALDON (rdgabaldon@santafenm.gov)
2025-12-29 - 8:50:52 PM GMT- IP address: 63.232.20.2

Document emailed to ajhopkins@santafenm.gov ajhopkins@santafenm.gov (ajhopkins@santafenm.gov) for signature
2025-12-29 - 8:52:50 PM GMT

Email viewed by ajhopkins@santafenm.gov ajhopkins@santafenm.gov (ajhopkins@santafenm.gov)
2026-01-05 - 7:36:58 PM GMT- IP address: 104.47.65.254

Document e-signed by ajhopkins@santafenm.gov ajhopkins@santafenm.gov (ajhopkins@santafenm.gov)
Signature Date: 2026-01-05 - 7:37:17 PM GMT - Time Source: server- IP address: 63.232.20.2

Document sent to JoAnn Lovato (jdlovato@santafenm.gov) and Travis Dutton-Leyda (tkduttonleyda@santafenm.gov) for signature. One of them to sign
2026-01-05 - 7:37:20 PM GMT

Email viewed by Travis Dutton-Leyda (tkduttonleyda@santafenm.gov)
2026-01-05 - 8:46:35 PM GMT- IP address: 63.232.20.2

CITY OF SANTA FE

The Purchasing Memo

Date: December 12, 2025

To: Governing Body, Finance Committee, and Public Works & Utilities Committee

From: Romella Glorioso-Moss, PhD, CPM, AICP, Capital Projects Manager RGM

Via: Sam Burnett, Public Works Interim Department Director JOHN BURNETT (Dec 22, 2025 08:40:53 MST)

Marcos Esquibel, Acting Complete Streets Division Director Marcos Esquibel

Subject: Amendment No. 1 to On-Call Professional Services Agreement

Vendor Name: Wilson & Company, Inc. Engineers & Architects

Munis Vendor Number: 2574

ITEM AND ISSUE:

Request for Approval of Amendment No. 1 to Professional Services Agreement Item #24-0483 with Wilson & Company, Inc. Engineers & Architects to Increase the Compensation by $5,000,000 for a New Total Amount of $10,000,000 Excluding NMGRT (Romella Glorioso-Moss, rsglorioso-moss@santafenm.gov, (505) 955-6623).

CONTRACT NUMBER:

The FY25 Munis contract number is 3250096.

BACKGROUND AND SUMMARY:

Wilson & Company, Inc., Engineers & Architects, has nearly exhausted the original contract amount of $5,000,000 (excluding NMGRT), while approximately 2.5 years remain in the contract term. During this period, Public Works Capital Projects is managing a significant increase in federally funded projects that require expanded engineering design and construction management support.

To ensure continuity of services and to meet the demands of these new projects, it is necessary to increase the contract amount by an additional $5,000,000 (excluding tax). This amendment will allow the department to assign additional work to Wilson & Company as project needs arise.

Execution of this amendment does not constitute a commitment to purchasing any specific amount of services. Funding for all work authorized under this agreement will be identified and budgeted, as appropriate, for each individual capital improvement project.

PRIOR APPROVALS AND SUPPORTING INFORMATION:

FUNDING SOURCE:

Fund Name/Number: Various

Munis Org Name/Number: Various

Munis Object Name/Number: Various

Budget Officer / Designee: Andy Hopkins **Date:** 01/05/2026

Budget Officer Comment/Exceptions: _____

PROCUREMENT METHOD:

The procurement method used was NMSA 1978, Section 13-1-111, RFP

This is just an amendment but the original procurement method was via RFP #24001.

Chief Procurement Officer (CPO)/Designee: JoAnn Lovato Montaño **Date:** 01/08/2026

CPO Comment/Exceptions: _____

ASSOCIATED APPROVALS:

IT Components included? ☐ Yes | ☒ No

Approval: _____ **Title:** _____ **Date:** _____

Comment/Exceptions: _____

Treasury/Point of Sale Components included? ☐ Yes | ☒ No

Approval: _____ **Title:** _____ **Date:** _____

Comment/Exceptions: _____

Vehicles included? ☐ Yes | ☒ No

Approval: _____ **Title:** _____ **Date:** _____

Comment/Exceptions: _____

Construction to City Facilities, Furniture, and/or Fixtures included? ☐ Yes | ☒ No

Approval: _____ **Title:** _____ **Date:** _____

Comment/Exceptions: _____

Is this an externally funded purchase? ☐ Yes | ☐ No

If yes, what is the issuing agency: _____

Approval: _____ **Title:** _____ **Date:** _____

Comment/Exceptions: _____

Is this a Capital Asset or Project? ☐ Yes | ☐ No

Project Ledger Number: _____

Approval: _____ **Title:** _____ **Date:** _____

Comment/Exceptions: _____

Item #: _____
Munis Contract #: _____
Original Contract Item #: 24-0483
RFP#: 24001

CITY OF SANTA FE, PUBLIC WORKS DEPARTMENT
AMENDMENT No. 1 TO
Contract # 24-0483

PROFESSIONAL SERVICES CONTRACT

This AMENDMENT No. 1 (the "Amendment") amends the CITY OF SANTA FE CONTRACT, dated August 1, 2024 (the "Contract"), between the City of Santa Fe (the "City") and **Wilson & Company, Inc., Engineers & Architects** (the "Contractor"). The date of this Amendment shall be the date when it is executed by the City and the Contractor whichever occurs last.

RECITALS:

A. Under the terms of the Contract, Contractor has agreed to provide professional engineering services.

B. Pursuant to Article 14 of the Contract, and for good and valuable consideration, the receipt and sufficiency of which are acknowledged by the parties, the City and the Contractor agree as follows:

1. COMPENSATION.

Article 3, paragraph A of the Contract is amended to increase the amount of compensation by a total of $5,000,000 so that Article 3, paragraph A reads in its entirety as follows:

A. The City shall pay to the Contractor in full payment for services satisfactorily performed as per Task Order, such compensation not to exceed ten million dollars ($10,000,000), excluding gross receipts tax. The New Mexico gross receipts tax levied at the rate of 8.1875% on the amounts payable under this Contract totaling eight hundred eighteen thousand seven hundred fifty dollars ($818,750) shall be paid by the City to the Contractor. The total amount payable to the Contractor under this Agreement, including gross receipts tax and

expenses, shall not exceed ten million eight hundred eighteen thousand seven hundred fifty dollars ($10,818,750). This amount is a maximum and not a guarantee that the work assigned to be performed by Contractor under this Contract shall equal the amount stated herein.

B. The compensation represents a maximum amount. The Contractor must notify the City when the Services provided under this Contract approach 90% of compensation total. Services rendered beyond the maximum compensation amount will not be reimbursed unless the Contract is amended in writing prior to the provision of such services.

C. Invoicing and Payment Terms Payment will be made upon the City's acceptance of deliverables and receipt of a detailed, certified invoice from the Contractor. Payments will be sent to the Contractor's designated address. The City shall issue payment in accordance with the timelines required by law. Invoices must be submitted no later than fifteen (15) days after the Contract's termination. Late invoices will not be processed or paid.

D. Extended Payment Terms for Grant-Funded Contracts For grant-funded agreements, the City may issue payment within forty-five (45) days following submission of an undisputed payment request.

CONTRACT IN FULL FORCE.

Except as specifically provided in this Amendment, the Contract remains and shall remain in full force and effect, in accordance with its terms.

[REMAINDER OF PAGE INTENTIONALLY LEFT BLANK]

[SIGNATURE PAGE TO FOLLOW]

IN WITNESS WHEREOF, the parties have executed this Amendment No. 1 to the Contract as of the dates set forth below.

CITY OF SANTA FE:

ALAN WEBBER, MAYOR

DATE:

CONTRACTOR:
Wilson and Company, Inc. Engineers and Architects

DANIEL AGUIRRE, PE
SENIOR VICE PRESIDENT

DATE: Nov 19, 2025

NMBTIN:

ATTEST:

CITY CLERK

CITY ATTORNEY'S OFFICE:

Kevin L. Nault
Kevin L. Nault (Nov 19, 2025 14:19:54 MST)

ASSISTANT CITY ATTORNEY

APPROVED FOR FINANCES:

BRIAN MOYA

FINANCE DIRECTOR 01/08/2026

Item #: 24-0483
Munis Contract #: _____
RFP#: 24001

CITY OF SANTA FE

PROFESSIONAL SERVICES CONTRACT

THIS CONTRACT is made and entered into by and between the City of Santa Fe, New Mexico, hereinafter referred to as the "City," and **Wilson & Company, Inc., Engineers & Architects**, hereinafter referred to as the "Contractor," and is effective as of the date set forth below upon which it is executed by the Parties.

RECITALS

WHEREAS, the Chief Procurement Officer of the City has made the determination that this Agreement is in accordance with the provisions of the New Mexico Procurement Code (NMSA 1978, 13-1-28 et seq.) pursuant to NMSA 1978, section 13-1-111; and

WHEREAS, the Contractor is one of such requisite knowledge and qualifications and is willing to engage with the City for professional services, in accordance with the terms and conditions hereinafter set out, and the Contractor understanding and consenting to the foregoing is willing to render such professional services as outlined in the Agreement; and

The City and the Contractor hereby agree as follows:

1. Scope of Work

The Contractor shall provide the following services for the City:

The Professional Engineer (PE) shall provide On-Call General Engineering Services and Construction Management Services for the design and construction of roadway, trail, drainage, facility, utility and traffic design. Once the City identifies a need, the City will issue a written task order to the PE that will detail required services. Upon receiving the City's request for services, the PE shall provide the City with an estimate of man-hours required to do the work and the parties will negotiate the tasks for each project on a project-by-project basis. The PE may be required to do the project work in phases. Where a project proceeds in phases based on the development model used by the City, the PE shall provide the work estimate for each phase.

Work estimates shall be based on producing the deliverables described in the development model below for the tasks or phase(s) in the task order.

1. PROJECT DEVELOPMENT PHASES

a. Phase 1 - Project Scoping

The PE will review available data, define project scope, conduct scoping field review, and write scoping report in accordance with guidelines of the New Mexico Department of Transportation.

1. Phase 1 Activities:

i. Understanding and documenting existing conditions, environmental, and right-of way needs
ii. Identifying design parameters for the project
iii. Documenting safety considerations
iv. Describing proposed improvements
v. Conducting a preliminary field review meeting
vi. Developing a preliminary engineer's estimate

2. Phase 1 Deliverables
   a. Scoping Report
   The following defines the required contents of the Scoping Report. The PE should evaluate all items listed below but some elements may not apply based on the project type.

      i. Project Summary/General Description
         a) Project data
            - Control number
            - Type of work
            - Project purpose and need
            - Location description
            - Posted route
            - Milepost (coordinates and/or intersections)
            - Project length
            - NMDOT district
            - County
            - Roadway functional classification
            - Terrain type
            - Fiscal year (study, design, construction) and project Termination Date
            - Program (funding category)
         b) Site description (beginning of project to end of project)
         c) Survey requirements (location and/or property survey)
         d) Right-of-way requirements
         e) Environmental Level of Effort (ELOE)
         f) Estimated project development time (from scoping to letting) all within agreement contract time
         g) Estimated project construction schedule and budget

      ii. Existing Conditions (where applicable)
         a) Typical road section
            - Driving lanes per direction
            - Auxiliary lanes (acceleration, deceleration, and turning lanes) and medians
            - Shoulders (including rumble strips/stripes) and/or curb and gutter
            - Surfacing tapers
            - Multi-modal facilities (including transit, pedestrian and bicycle facilities)
         b) Roadside slopes

c) Geotechnical conditions
d) Surfacing type and condition
e) Horizontal alignment
f) Vertical alignment
g) Major and minor roadway intersections
h) Right-of-way width
i) Major structures (> 20-foot span)
j) Other structures (< 20-foot span, may include fencing, retaining walls, cattle guards, concrete box culverts, safety barriers, etc.)
k) Roadway lighting
l) Traffic control and management devices (traffic signals, intelligent transportation system (ITS) equipment, special traffic signs, etc.)
m) Utilities (inventory and owners)
n) Environmental factors
o) Posted speed limit and design speed
p) Driveway and entrances (inventory)
q) Level of service (traffic volume and fleet characteristics)
r) Facilities and compliance with the Americans with Disabilities Act (ADA)
s) Railroad facilities (identify, should include railroad right-of-way, crossings, etc.)
t) Erosion control and landscaping installations
u) School crossings
v) Safety considerations

iii. Proposed Improvements
a) Typical section (including surfacing type and thickness)
b) Major structures
c) Other structures
d) Horizontal alignment
e) Vertical alignment
f) Intersections
g) Turnouts
h) Safety
i) Drainage and erosion control
j) Design exceptions/ variances
k) Detours and traffic control
l) Warrants and signalization
m) Landscaping and irrigation
n) ADA/ pedestrian/ bicycle
o) Special issues or unique project elements

iv. Factors Affecting Project Development and Schedule
a) Survey requirements
b) Environmental requirements and certification
- Archaeological requirements
- Historic preservation requirements (include the State Historic Preservation Officer (SHPO) or Tribal Historic Preservation Officer (THPO)

- Hazardous materials investigations
- Right-of-way (ROW) considerations and certification
- Utility relocations and/or hookups and utility certification
- Outside agency involvement and coordination
- Railroad facilities and certification
- ITS facilities and certification

b. Conceptual Design
Contractor shall inquire with the Director of Public Works to determine whether an Early Neighborhood Notification ("ENN") Meeting will be held for the project. If an ENN is to be held, Contractor shall develop a conceptual design based on the Project Scoping Report, and may be directed to present the conceptual design to the Public via the ENN Meeting described below. Conceptual design can be simply a series of sketches, ideas and explorations, or it can go to considerable depth, including design illustrations, indicative plans, sections and elevations and 3D models of a development approach.

c. ENN Meeting
An ENN is required for certain types of city capital improvement projects requiring review by the governing body as follows:

i. Facility plans for municipal facilities or services, including wastewater, solid waste, potable water and airport facilities.
ii. New projects or projects to expand or extend service to new service areas included in the capital improvement plan or general plan.
iii. Any new road construction or reconstruction of an existing road that materially expands capacity.
iv. Projects funded out of capital impact fee funds.
v. Any new park or reconstruction or expansion of an existing park that exceeds one acre in size or one hundred and fifty thousand dollars ($150,000) in cost.
vi. Construction of a new building or structure at a park or placement of new lighting at a park that exceeds one hundred and fifty thousand dollars ($150,000) in cost.

See APPENDIX A for the ENN Requirements.

b. Phase II – Preliminary Design (30% Design)

Preliminary design defines the general project location and design concepts. It includes, but is not limited to, preliminary engineering and other activities and analyses, such as environmental assessments, topographic surveys, metes and bounds surveys, geotechnical investigations, hydrologic analysis, hydraulic analysis, utility engineering, traffic studies, financial plans, revenue estimates, hazardous materials assessments, general estimates of the types and quantities of materials, and other work needed to establish parameters for the final design. Preliminary design should focus on establishing the horizontal and vertical alignments, typical section, and drainage and structural needs to a level sufficient to establish the project footprint. Contractor shall develop a preliminary design to the standard of the NMDOT for a 30% level of completion.

1. Phase 2 Activities

The following activities should be initiated, if applicable, or required by the Scoping Report:

i. Complete Drainage Report
ii. Development of typical sections, grading plans, geometric alignments
iii. Bridge type/size/location studies, temporary structure requirements, staged bridge construction requirements
iv. Structural design, retaining wall design, noise wall design
v. Guardrail length/layout
vi. Existing property lines
vii. Title and deed research
viii. Soil borings
ix. Cross sections with flow line elevations
x. Ditch designs
xi. Intersection design/configuration
xii. Interchange design/configurations
xiii. Pavement design
xiv. Storm/sanitary sewer design
xv. Culvert design, identification of removal items
xvi. Quantity estimates
xvii. Pavement details/elevation tables
xviii. Preliminary traffic control plans to be maintained during construction
xix. Coordinate railroad impacts
xx. Coordinate ITS impacts and improvements
xxi. Identify utility owners, records research, and begin utility coordination for Subsurface Utility Engineering (SUE)
xxii. Continue documentation for environmental, cultural resource, and hazardous materials investigations, and obtain approvals
xxiii. Hold ENN meeting (APPENDIX A)

If additional right-of-way is needed, the following additional activities need to occur in order during Preliminary Design.

i. Complete property survey
ii. Based on the project footprint, identify cultural and biological resource impacts and prepare plans for avoidance or mitigation .
iii. If there are right-of-way impacts, the PE will schedule a meeting with the NMDOT's Right of Way Bureau and the Tribal/Local Public Agency Coordinator of North Region Design.
iv. Begin Title Search and Title Reports

2. Phase 2 Deliverables

Typically, preliminary design would require a final geotechnical report, a final drainage report, utility location and mapping, right-of-way design and legal descriptions, roadway plan and profiles, bridge and structure types and criteria, plan and profile sheets, a preliminary traffic control plan, a National Pollution Discharge Elimination System (NPDES) permit, and an engineer's construction cost estimate.

The PE shall use the NMDOT format for plan sets with standard information to be completed to a level consistent with the design stage. For NMDOT series sheets standards please refer to the "Tribal/Local Public Agency Handbook", 2019 or most current edition.

c. Phase III – Grade and Drain (60% Design)

The engineer shall address all comments on the 30% complete Preliminary Design by City Staff, including but not limited to Complete Streets, Parks and Open Spaces, Land Use, Public Utilities, and SFMPO, as well as comments by the Bicycle and Pedestrian Advisory Committee and comments from the NMDOT review meeting. All of the components in the 30% Preliminary Design phase are further developed and designed to a greater level of detail.

1. Phase III Activities
   - i. Design drainage improvements
   - ii. Finalize project footprint
   - iii. Complete quantity schedules (if not included in the preliminary plans) and ensure they reflect computed design quantities
   - iv. Prepare and submit design variance and/or exceptions (if applicable)
   - v. Continue with environmental approvals
   - vi. Continue right-of-way process
   - vii. Develop preliminary traffic control plans including a suggested sequence of construction.
   - viii. Submit engineer's estimate
   - ix. Prepare and submit draft contract book, including specifications, special provisions and Notice to Contractor (NTC)
   - x. Incorporate ITS sheets, if necessary
   - xi. Incorporate rail design or mitigation and coordinate rail agreements and special provisions, as required
   - xii. Submit all Public Interest Findings (PIF) requests, if applicable
   - xiii. Coordinate the Storm Water Pollution Prevention Plan (SWPPP) sheets and Temporary Erosion and Sediment Control Plan (TESCP) sheets with the City's River and Watershed Manager (if the project's disturbed area is greater than one acre)
   - xiv. Begin Utility Relocation documentation (if applicable) for utility certification

2. Phase III Deliverables
   Submit to the City's Project Manager the 60% design plan set for review at least 2 weeks in advance of review meeting.

d. Phase 1V - Plan-in-Hand (90% Design)

Comments from the 60% Design review meeting and Constructability Review, when applicable, are incorporated during the 90% Design phase. At 90% Design, the plans, quantities, and engineer's estimate should be nearly complete. Only minor design changes should be occurring at (or after) this design phase. During the 90% Design phase, construction phasing layouts and construction signing, and striping plans are finalized, and project

certification requests are completed and requested from NMDOT's North Region Design Coordinator or T/LPA Coordinator.

1. Phase IV Activities
   i. Finalize plans
   ii. Finalize right-of-way coordination/certification
   iii. Finalize utilities coordination/certification
   iv. Finalize ITS coordination/certification
   v. Finalize railroad coordination/certification
   vi. Finalize environmental certification
   vii. Complete work zone checklist
   viii. Start plans, specifications, and estimates (PS&E) checklist
   ix. Finalize project cost estimate, including testing, construction management, and utility relocation when applicable
   x. Request Disadvantaged Business Enterprise Program (DBE) goal from the Region Coordinator, if applicable
   xi. Finalize project specifications and contract book, including all federal requirements
   xii. If project-specific special provisions are required, those must be submitted to the NMDOT's North Region Design Coordinator or T/LPA Coordinator for review and approval
   xiii. If project-specific Notice to Contractors (NTCs) are required, those must be submitted to the NMDOT's North Region Design Coordinator or T/LPA Coordinator for review and approval

2. Phase IV Deliverables
   The 90% design plans shall include as appropriate: cover sheet, title sheet, typical roadway sections, quantity sheets, general notes, SWPPP Information sheet, TESCP sheets, plan and profile sheets, roadway, trail, interchange and intersection plans, structure placement sheets, special details, bridge plans and foundation recommendations, traffic control and detour plans, permanent signing and striping, signalization, lighting plans, grading plans, earthwork computations, landscape details and/or plans, incorporation of standard plans and those prepared by others, final detail estimate and proposal, supplemental specifications, notice to contractors, and special provisions as required and all other plans/specifications as may be required.

   The 90% design plan set shall further include five (5) required NMDOT certifications. Environmental, ROW, Utility, Railroad, and Intelligent Transportation System (ITS) certifications must be submitted to City's Project Administrator at least two (2) weeks prior the review meeting.

e. Phase V - Plans, Specifications, and Estimate (PS&E)

The PS&E phase incorporates the comments from the 90% Design review meeting and finalizes the plans, quantities, and engineer's estimate. The contract book and specifications are complete, and all certifications are obtained prior to holding the PS&E review.

1. PS&E Deliverables
   a. PS&E package (to be submitted to City Project Administrator at least one week before NMDOT's annual deadline of June 1st)
      i. 100% construction plans
      ii. Engineer's opinion of probable cost
      iii. Contract book
      iv. Environmental clearance and certification documentation
      v. SHPO's concurrence
      vi. Right-of-way certification documentation
      vii. Utility certification documentation
      viii. ITS certification documentation
      ix. Railroad certification documentation
      x. Work zone checklist
      xi. All other applicable maintenance agreements
      xii. PS&E checklist
      xiii. Approved Public Interest Findings (PIFs) and/or variances if applicable

   b. Project Production Package (to be submitted to City Project Administrator at least one week before NMDOT's annual deadline of June 15th)
      i. Stamped and sealed construction plans
      ii. Engineer's opinion of probable cost (including Construction Management if using federal funding to cover these expenses and utility relocation when applicable)
      iii. Contract book (may leave out wage decisions until ready to bid because they can change over time)
      iv. Environmental clearance and certification documentation, including signed environmental commitments sheet in the construction plans
      v. SHPO's or THPO's concurrence
      vi. Right-of-way certification documentation
      vii. Utility certification documentation
      viii. ITS certification documentation
      ix. Railroad certification documentation
      x. Work zone checklist
      xi. All other applicable maintenance agreements
      xii. Signed PS&E checklist
      xiii. Approved PIFs and/or variances if applicable

f. Phase VI - Construction Engineering and Management Services

Construction Engineering and Management Services begins when the City advertises, bids and awards the project.

Upon request, the PE shall review bids and/or offers and provide an opinion to the City's Central Purchasing Office as to whether the bids and/or offers fully address the Invitation to Bid and/or Request for Proposals, and shall recommend selection of a bidder or offeror with written justification for that recommendation.

When a contract is awarded by the City in relation to the project, the PE shall fully execute and participate in the following tasks to implement the construction of the Project in conformance with the plans and specifications:

1. Hold Transition Meeting with City Project Administrator and NMDOT/FHWA Staff to discuss the required project documentation, format for submittals, and procedures to be used to ensure adequate management of a federally-funded construction project.
2. Hold Preconstruction Conference.
3. Duties during construction:
    i. Daily documentation and maintain a project management diary
    ii. Verify all construction activities and documentation meet NMDOT and federal standards and policies
    iii. Supervise activities for government and third-party inspectors and office personnel
    iv. Administer change orders in compliance with the change order provisions stated in the Tribal/Local Public Agency Handbook (current edition).
    v. Coordinate all project activities
    vi. Maintain public relations
    vii. Address all problems and/or concerns related to project designs and plans.
    viii. Approve all project documentation and submittals (including source books, certificates of complianceNPDES permit, payrolls, subcontracts, traffic control diary, quality control plan, and testing reports).
    ix. Enforce contractor's compliance with contract requirements (i.e., Buy America, Disadvantaged Business Enterprise (DBE), EEO, traffic control/safety, etc.)
    x. Administer monthly progress payments
    xi. Reject defective and/or non-compliant material and workmanship, in accordance with the contract
    xii. Interpret the plans and specifications
    xiii. Verify construction activities meet contractor schedule
    xiv. Designate a person familiar with Storm Water Pollution (SWPP) Plan Preparation and Maintenance to review the work of contractors and provide an opinion on compliance to the Public Works Director, when applicable. In order to be considered "familiar," that person would need to have attended the Associated Contractors of New Mexico (ACNM) class "Storm Water Qualified Person" or equivalent.
    xv. Approve the contractor's Quality Control Plan per Section 902, Quality Control, of the NMDOT Standard Specifications at least two weeks prior to the start of any work being performed that requires QC testing for acceptance. Once the Quality Control Plan is approved, PE shall verify that it is on file.
    xvi. Review and approve any proposed changes to the traffic control plan at least two weeks prior to implementation. Ensure the revisions have been designed in accordance with 23 CFR § 630 Subpart J – Work Zone Safety and Mobility and 23 CFR § 630 Subpart K – Temporary Traffic Control Devices and are stamped by a current New Mexico Licensed Professional Engineer. If any part of the revised traffic control will be located on an NMDOT roadway, concurrence from the District Traffic Engineer is required prior to approval by the City project manager. Unapproved changes shall not be allowed in the field.

xvii. Ensure proper B2Gnow and LCPtracker reporting.
xviii. Review and approve progress payments.
xix. Prepare for Project Closure and Final Inspection.

4. Duties after construction

Prepare and submit the Final Package to NMDOT.

In all cases where the PE is responsible for acceptance of a deliverable, payment of invoices remains subject to acceptance by city staff pursuant to Section 3(D) above.

2. Standard of Performance; Licenses

A. The Contractor does hereby accept its designation as a professional service, rendering services related to general engineering and construction management services for the City, as set forth in this Agreement. The Contractor represents that Contractor possesses the personnel, experience, and knowledge necessary to perform the services described under this Contract.

B. The Contractor agrees to obtain and maintain throughout the term of this Contract, all applicable professional and business licenses required by law, for itself, its employees, agents, representatives, and subcontractors.

3. Compensation

A. The City shall pay to the Contractor in full payment for services satisfactorily performed as per Task Order, such compensation not to exceed five million dollars ($5,000,000), excluding gross receipts tax. The New Mexico gross receipts tax levied on the amounts payable under this Contract totaling four hundred nine thousand three hundred seventy-five dollars ($409,375) shall be paid by the City to the Contractor. **The total amount payable to the Contractor under this Agreement, including gross receipts tax and expenses, shall not exceed five million four hundred nine thousand three hundred seventy-five dollars ($5,409,375). This amount is a maximum and not a guarantee that the work assigned to be performed by Contractor under this Contract shall equal the amount stated herein. The parties do not intend for the Contractor to continue to provide services without compensation when the total compensation amount is reached. Contractor is responsible for notifying the City when the services provided under this Contract reach the total compensation amount. In no event will the Contractor be paid for services provided in excess of the total compensation amount without this Contract being amended in writing prior to those services in excess of the total compensation amount being provided.**

B. Payment is subject to availability of funds pursuant to the Appropriations Paragraph set forth below and to any negotiations between the parties from year to year pursuant to Paragraph 1, Scope of Work, and to approval by the City. All invoices MUST BE received by the City no later than thirty 30) days after the termination of the Fiscal Year in which the services were delivered. Invoices received after such date WILL NOT BE PAID.

C. Payment in future fiscal years is subject to availability of funds pursuant to the Appropriations Paragraph set forth below and to any negotiations between the parties from year to year pursuant to Paragraph 1, Scope of Work, and to approval by the City. All invoices MUST BE received by the City no later than fifteen (15) days after the termination of the Fiscal Year in which the services were delivered.

Invoices received after such date WILL NOT BE PAID.)

D. Contractor must submit a detailed statement accounting for all services performed and expenses incurred. If the City finds that the services are not acceptable, within thirty days after the date of receipt of written notice from the Contractor that payment is requested, it shall provide the Contractor a letter of exception explaining the defect or objection to the services, and outlining steps the Contractor may take to provide remedial action. Upon certification by the City that the services have been received and accepted, payment shall be tendered to the Contractor within thirty days after the date of acceptance. If payment is made by mail, the payment shall be deemed tendered on the date it is postmarked.

E. If the City fails to pay the contractor within twenty-one days after receipt of an undisputed request for payment, the City shall pay interest to the contractor beginning on the twenty-second day after payment was due, computed at one and one-half percent of the undisputed amount per month or fraction of a month until the payment is issued. If the City receives an improperly completed invoice, the City shall notify the sender of the invoice within seven days of receipt in what way the invoice is improperly completed, and the owner has no further duty to pay on the improperly completed invoice until it is resubmitted as complete.

F. **Notice of Extended Payment Provision For Grant Funded Contracts**. This contract allows the owner to make payment within 45 days after submission of an undisputed request for payment.

4. Term

THIS CONTRACT SHALL NOT BECOME EFFECTIVE UNTIL APPROVED BY THE CITY. This Contract shall terminate **four (4) years from date of final signature** unless terminated pursuant to paragraph 5 (Termination) and paragraph 6 (Appropriations) in accordance with NMSA 1978, Sections 13-1-150 through 152.

5. Termination

A. Grounds. The City may terminate this Agreement for convenience or cause. For contracts within their authority, the City Manager or their designee is authorized to provide the notice of termination, otherwise such notice of termination shall be provided by the Mayor or their designee as authorized by the Governing Body. The Contractor may only terminate this Agreement based upon the City's uncured, material breach of this Agreement.

B. Notice; City Opportunity to Cure.

1) The City shall give Contractor written notice of termination at least thirty (30) days prior to the intended date of termination.

2) Contractor shall give City written notice of termination at least thirty (30) days prior to the intended date of termination, which notice shall (i) identify all the City's material breaches of this Agreement upon which the termination is based and (ii) state what the City must do to cure such material breaches. Contractor's notice of termination shall only be effective (i) if the City does not cure all material breaches within the thirty (30) day notice period or (ii) in the case of material breaches that cannot be cured within thirty (30) days, the City does not, within the thirty (30) day notice period, notify the Contractor of its intent to cure and begin with due diligence to cure the material breach.

3) Notwithstanding the foregoing, this Agreement may be terminated immediately upon written notice to the Contractor (i) if the Contractor becomes unable to perform the services contracted for, as determined by the City; (ii) if, during the term of this Agreement, the Contractor is suspended or debarred by the City; or (iii) the Agreement is terminated pursuant to

Paragraph 6, "Appropriations", of this Agreement.

C. Liability. Except as otherwise expressly allowed or provided under this Agreement, the City's sole liability upon termination shall be to pay for acceptable work performed prior to the Contractor's receipt or issuance of a notice of termination; provided, however, that a notice of termination shall not nullify or otherwise affect either party's liability for pre-termination defaults under or breaches of this Agreement. The Contractor shall submit an invoice for such work within thirty (30) days of receiving or sending the notice of termination. *THIS PROVISION IS NOT EXCLUSIVE AND DOES NOT WAIVE THE CITY'S OTHER LEGAL RIGHTS AND REMEDIES CAUSED BY THE CONTRACTOR'S DEFAULT/BREACH OF THIS AGREEMENT.*

6. Appropriations

The terms of this Contract are contingent upon sufficient appropriations and authorization being made by the Governing Body for the performance of this Contract. If sufficient appropriations and authorization are not made by the Governing Body, this Contract shall terminate immediately upon written notice being given by the City to the Contractor. The City's decision as to whether sufficient appropriations are available shall be accepted by the Contractor and shall be final. If the City proposes an amendment to the Contract to unilaterally reduce funding, the Contractor shall have the option to terminate the Contract or to agree to the reduced funding, within thirty (30) days of receipt of the proposed amendment.

7. Status of Contractor

The Contractor and its agents and employees are independent contractors performing professional services for the City and are not employees of the City. The Contractor and its agents and employees shall not accrue leave, retirement, insurance, bonding, use of City vehicles, or any other benefits afforded to employees of the City as a result of this Contract. The Contractor acknowledges that all sums received hereunder are reportable by the Contractor for tax purposes, including without limitation, self-employment and business income tax. The Contractor agrees not to purport to bind the City unless the Contractor has express written authority to do so, and then only within the strict limits of that authority.

8. Assignment

The Contractor shall not assign or transfer any interest in this Contract or assign any claims for money due or to become due under this Contract without the prior written approval of the City.

9. Subcontracting

The Contractor shall not subcontract any portion of the services to be performed under this Contract without the prior written approval of the City. No such subcontract shall relieve the primary Contractor from its obligations and liabilities under this Contract, nor shall any subcontract obligate direct payment from the City.

10. Release

Final payment of the amounts due under this Contract shall operate as a release of the City, its officers and employees from all liabilities, claims and obligations whatsoever arising from or under this Contract.

11. Confidentiality

Any confidential information provided to or developed by the Contractor in the performance of this Contract shall be kept confidential and shall not be made available to any individual or organization by the Contractor without the prior written approval of the City.

12. Product of Service -- Copyright

All materials developed or acquired by the Contractor under this Contract shall become the property of the City and shall be delivered to the City no later than the termination date of this Contract. Nothing developed or produced, in whole or in part, by the Contractor under this Contract shall be the subject of an application for copyright or other claim of ownership by or on behalf of the Contractor.

13. Conflict of Interest; Governmental Conduct Act

A. The Contractor represents and warrants that it presently has no interest and, during the term of this Contract, shall not acquire any interest, direct or indirect, which would conflict in any manner or degree with the performance or services required under the Contract.

B. The Contractor further represents and warrants that it has complied with, and, during the term of this Contract, will continue to comply with, and that this Contract complies with all applicable provisions of the Governmental Conduct Act, Chapter 10, Article 16 NMSA 1978.

C. Contractor's representations and warranties in Paragraphs A and B of this Article are material representations of fact upon which the City relied when this Contract was entered into by the parties. Contractor shall provide immediate written notice to the City if, at any time during the term of this Contract, Contractor learns that Contractor's representations and warranties in Paragraphs A and B of this Article were erroneous on the effective date of this Contract or have become erroneous by reason of new or changed circumstances. If it is later determined that Contractor's representations and warranties in Paragraphs A and B of this Article were erroneous on the effective date of this Contract or have become erroneous by reason of new or changed circumstances, in addition to other remedies available to the City and notwithstanding anything in the Contract to the contrary, the City may immediately terminate the Contract.

D. All terms defined in the Governmental Conduct Act have the same meaning in this section.

14. Amendment

A. This Agreement shall not be altered, changed, or amended except by instrument in writing executed by the parties hereto and all other required signatories.

B. If the City proposes an amendment to the Contract to unilaterally reduce funding due to budget or other considerations, the Contractor shall, within thirty (30) days of receipt of the proposed Amendment, have the option to terminate the Contract, pursuant to the termination provisions as set forth in Article 4 herein, or to agree to the reduced funding.

15. Entire Agreement.

This Agreement, together with any other documents incorporated herein by reference and all related Exhibits and Schedules constitutes the sole and entire agreement of the Parties with respect to the subject matter of this Agreement, and supersedes all prior and contemporaneous understandings, agreements, representations, and warranties, both written and oral, with respect to the subject matter. In the event of any inconsistency between the statements in the body of this Agreement, and the related Exhibits and Schedules, the statements in the body of this Agreement shall control.

16. Merger

This Contract incorporates all the Agreements, covenants and understandings between the parties hereto concerning the subject matter hereof, and all such covenants, agreements, and understandings have been merged into this written contract.

All terms and conditions of the **RFP #24001 On-Call General Engineering Services for Roadway, Trail, Bridge, Drainage, Facility, Utility and Traffic Design** and the Contractor's response to such document(s) are incorporated herein by reference and is included in the order of precedence.

No prior Agreement or understanding, oral or otherwise, of the parties or their agents shall be valid or enforceable unless embodied in this Contract.

17. Penalties for violation of law

NMSA 1978, sections 13-1-28 through 13-1-199, imposes civil and criminal penalties for its violation. In addition, the New Mexico criminal statutes impose felony penalties for illegal bribes, gratuities, and kickbacks.

18. Equal Opportunity Compliance

The Contractor agrees to abide by all federal and state laws and rules and regulations, and Santa Fe City Code, pertaining to equal employment opportunity. In accordance with all such laws of the State of New Mexico, the Contractor assures that no person in the United States shall, on the grounds of race, religion, color, national origin, ancestry, sex, age, physical or mental handicap, or serious medical condition, spousal affiliation, sexual orientation or gender identity, be excluded from employment with or participation in, be denied the benefits of, or be otherwise subjected to discrimination under any program or activity performed under this Contract. If Contractor is found not to be in compliance with these requirements during the life of this Contract, Contractor agrees to take appropriate steps to correct these deficiencies.

19. Applicable Law

The laws of the State of New Mexico shall govern this Contract, without giving effect to its choice of law provisions. Venue shall be proper only in a New Mexico court of competent jurisdiction in accordance with NMSA 1978, section 38-3-2. By execution of this Contract, Contractor acknowledges and agrees to the jurisdiction of the courts of the State of New Mexico over any and all lawsuits arising under or out of any term of this Contract.

20. Workers Compensation

The Contractor agrees to comply with state laws and rules applicable to workers compensation benefits for its employees. If the Contractor fails to comply with the Workers Compensation Act and applicable rules when required to do so, this Contract may be terminated by the City.

21. Professional Liability Insurance

Contractor shall maintain professional liability insurance throughout the term of this Contract providing a minimum coverage in the amount required under the New Mexico Tort Claims Act. The Contractor shall furnish the City with proof of insurance of Contractor's compliance with the provisions of this section as a condition prior to performing services under this Contract.

22. Other Insurance

If the services contemplated under this Contract will be performed on or in City facilities or property, Contractor shall maintain in force during the entire term of this Contract, the following insurance coverage(s), naming the City as additional insured.

A. **Commercial General Liability** insurance shall be written on an occurrence basis and be a broad as ISO Form CG 00 01 with limits not less than $2,000,000 per occurrence and $2,000,000 in the aggregate for claims against bodily injury, personal and advertising injury, and property damage. Said policy shall include broad form Contractual Liability coverage and be endorsed to name the City of Santa Fe their officials, officers, employees, and agents as additional insureds.

B. **Business Automobile Liability** insurance for all owned, non-owned automobiles, with a combined single limit not less than $1,000,000 per accident.

C. **Broader Coverage and Limits**. The insurance requirements under this Contract shall be the greater of (1) the minimum coverage and limits specified in this Contract, or (2) the broader coverage and maximum limits of coverage of any insurance policy or proceeds available to the Named Insured. It is agreed that these insurance requirements shall not in any way act to reduce coverage that is broader or that includes higher limits than the minimums required herein. No representation is made that the minimum insurance requirements of this Contract are sufficient to cover the obligations of Contractor hereunder.

D. Contractor shall maintain the above insurance for the term of this Contract and name the City as an additional insured and provide for 30 days cancellation notice on any Certificate of Insurance form furnished by Contractor. Such certificate shall also specifically state the coverage provided under the policy is primary over any other valid and collectible insurance and provide a waiver of subrogation.

23. Records and Financial Audit

The Contractor shall maintain detailed time and expenditure records that indicate the date; time, nature and cost of services rendered during the Contract's term and effect and retain them for a period of three (3) years from the date of final payment under this Contract. The records shall be subject to inspection by the City. The City shall have the right to audit billings both before and after payment. Payment under this Contract shall not foreclose the right of the City to recover excessive or illegal payments.

24. Indemnification

The Contractor shall defend, indemnify and hold harmless the City from all actions, proceeding, claims, demands, costs, damages, attorneys' fees and all other liabilities and expenses of any kind from any source which may arise out of the performance of this Contract, caused by the negligent act or failure to act of the Contractor, its officers, employees, servants, subcontractors or agents, or if caused by the actions of any client of the Contractor resulting in injury or damage to persons or property during the time when the Contractor or any officer, agent, employee, servant or subcontractor thereof has or is performing services pursuant to this Contract. If any action, suit or proceeding related to the services performed by the Contractor or any officer, agent, employee, servant or subcontractor under this Contract is brought against the Contractor, the Contractor shall, as soon as practicable but no later than two (2) days after it receives notice thereof, notify the legal counsel of the City.

25. New Mexico Tort Claims Act

Any liability incurred by the City of Santa Fe in connection with this Contract is subject to the immunities

and limitations of the New Mexico Tort Claims Act, Section 41-4-1, et. seq. NMSA 1978, as amended. The City and its "public employees" as defined in the New Mexico Tort Claims Act, do not waive sovereign immunity, do not waive any defense and do not waive any limitation of liability pursuant to law. No provision in this Contract modifies or waives any provision of the New Mexico Tort Claims Act.

26. Invalid Term or Condition

If any term or condition of this Contract shall be held invalid or unenforceable, the remainder of this Contract shall not be affected and shall be valid and enforceable.

27. Enforcement of Contract

A party's failure to require strict performance of any provision of this Contract shall not waive or diminish that party's right thereafter to demand strict compliance with that or any other provision. No waiver by a party of any of its rights under this Contract shall be effective unless express and in writing, and no effective waiver by a party of any of its rights shall be effective to waive any other rights.

28. Notices

Any notice required to be given to either party by this Contract shall be in writing and shall be delivered in person, by courier service or by U.S. mail, either first class or certified, return receipt requested, postage prepaid, as follows:

To the City: Regina Wheeler, Public Works Department Director, City of Santa Fe, P.O. Box 909 Santa Fe, NM 87504-0909, rawheeler@santafenm.gov.

To the Contractor: Daniel Aguirre, PE, Senior Vice President, Wilson & Company, Inc., Engineers & Architects, 4401 Masthead Street NE, Suite 150, Albuquerque, NM 87109, daniel.aguirre@wilsonco.com.

29. Authority

If Contractor is other than a natural person, the individual(s) signing this Contract on behalf of Contractor represents and warrants that he or she has the power and authority to bind Contractor, and that no further action, resolution, or approval from Contractor is necessary to enter a binding contract.

30. Non-Collusion

In signing this Agreement, the Contractor certifies the Contractor has not, either directly or indirectly, entered into action in restraint of free competitive bidding in connection with this offer submitted to the City's Chief Procurement Officer.

31. Default/Breach

In case of Default and/or Breach by the Contractor, for any reason whatsoever, the City may procure the goods or services from another source and hold the Contractor responsible for any resulting excess costs and/or damages, including but not limited to, direct damages, indirect damages, consequential damages, special damages, and the City may also seek all other remedies under the terms of this Agreement and under law or equity.

32. Equitable Remedies

The Contractor acknowledges that its failure to comply with any provision of this Agreement will cause the City irrevocable harm and that a remedy at law for such a failure would be an inadequate remedy for the City, and the Contractor consents to the City 's obtaining from a court of competent jurisdiction, specific performance,

or injunction, or any other equitable relief in order to enforce such compliance. The City's rights to obtain equitable relief pursuant to this Agreement shall be in addition to, and not in lieu of, any other remedy that the City may have under applicable law, including, but not limited to, monetary damages.

33. Default and Force Majeure

The City reserves the right to cancel all, or any part of any orders placed under this Agreement without cost to the City, if the Contractor fails to meet the provisions of this Agreement and, except as otherwise provided herein, to hold the Contractor liable for any excess cost occasioned by the City due to the Contractor's default. The Contractor shall not be liable for any excess costs if failure to perform the order arises out of causes beyond the control and without the fault or negligence of the Contractor; such causes include, but are not restricted to, acts of God or the public enemy, acts of the State or Federal Government, fires, floods, epidemics, quarantine restrictions, strikes, freight embargoes, unusually severe weather and defaults of subcontractors due to any of the above, unless the City shall determine that the supplies or services to be furnished by the subcontractor were obtainable from other sources in sufficient time to permit the Contractor to meet the required delivery scheduled. The rights and remedies of the City provided in this Clause shall not be exclusive and are in addition to any other rights now being provided by law or under this Agreement.

IN WITNESS WHEREOF, the Parties have executed this Contract as of the date of the signature by the required approval authorities below.

CITY OF SANTA FE:

Alan Webber (Aug 1, 2024 18:26 MDT)

ALAN WEBBER, CITY MAYOR

DATE: Aug 1, 2024

CONTRACTOR:
Wilson & Company, Inc., Engineers & Architects

DANIEL AGUIRRE, PE
SENIOR VICE PRESIDENT

DATE: Jul 3, 2024

CRS#: 02-357658-00-8

Registration #: NM 11955

ATTEST:

GERALYN CARDENAS XIV
INTERIM CITY CLERK
GB MTG 07/31/2024

CITY ATTORNEY'S OFFICE:

Marcos Martinez
Marcos Martinez (Jul 3, 2024 13:49 MDT)

MARCOS MARTINEZ
SENIOR ASSISTANT CITY ATTORNEY

APPROVED FOR FINANCES:

Emily K. Oster

EMILY OSTER, FINANCE DIRECTOR

CERTIFICATE OF LIABILITY INSURANCE

DATE (MM/DD/YYYY) 5/22/2025

6/1/2026

THIS CERTIFICATE IS ISSUED AS A MATTER OF INFORMATION ONLY AND CONFERS NO RIGHTS UPON THE CERTIFICATE HOLDER. THIS CERTIFICATE DOES NOT AFFIRMATIVELY OR NEGATIVELY AMEND, EXTEND OR ALTER THE COVERAGE AFFORDED BY THE POLICIES BELOW. THIS CERTIFICATE OF INSURANCE DOES NOT CONSTITUTE A CONTRACT BETWEEN THE ISSUING INSURER(S), AUTHORIZED REPRESENTATIVE OR PRODUCER, AND THE CERTIFICATE HOLDER.

IMPORTANT: If the certificate holder is an ADDITIONAL INSURED, the policy(ies) must have ADDITIONAL INSURED provisions or be endorsed. If SUBROGATION IS WAIVED, subject to the terms and conditions of the policy, certain policies may require an endorsement. A statement on this certificate does not confer rights to the certificate holder in lieu of such endorsement(s).

PRODUCER Lockton Companies, LLC DBA Lockton Insurance Brokers, LLC in CA CA license #0F15767 444 W. 47th St., Ste. 900 Kansas City MO 64112-1906 (816) 960-9000 kcasu@lockton.com	**CONTACT NAME:** **PHONE (A/C, No, Ext):** **FAX (A/C, No):** **E-MAIL ADDRESS:**
INSURED 3491 WILSON & COMPANY, INC., ENGINEERS & ARCHITECTS 4401 MASTHEAD STREET NE, SUITE 150 ALBUQUERQUE, NM 87109	**INSURER(S) AFFORDING COVERAGE** — **NAIC #** **INSURER A :** Valley Forge Insurance Company — 20508 **INSURER B :** National Fire Insurance Co of Hartford — 20478 **INSURER C :** The Continental Insurance Company — 35289 **INSURER D :** American Casualty Company of Reading, PA — 20427 **INSURER E :** Transportation Insurance Company — 20494 **INSURER F :**

COVERAGES **CERTIFICATE NUMBER:** 17564808 **REVISION NUMBER:** XXXXXXX

THIS IS TO CERTIFY THAT THE POLICIES OF INSURANCE LISTED BELOW HAVE BEEN ISSUED TO THE INSURED NAMED ABOVE FOR THE POLICY PERIOD INDICATED. NOTWITHSTANDING ANY REQUIREMENT, TERM OR CONDITION OF ANY CONTRACT OR OTHER DOCUMENT WITH RESPECT TO WHICH THIS CERTIFICATE MAY BE ISSUED OR MAY PERTAIN, THE INSURANCE AFFORDED BY THE POLICIES DESCRIBED HEREIN IS SUBJECT TO ALL THE TERMS, EXCLUSIONS AND CONDITIONS OF SUCH POLICIES. LIMITS SHOWN MAY HAVE BEEN REDUCED BY PAID CLAIMS.

INSR LTR	TYPE OF INSURANCE	ADDL INSD	SUBR WVD	POLICY NUMBER	POLICY EFF (MM/DD/YYYY)	POLICY EXP (MM/DD/YYYY)	LIMITS	
A	X **COMMERCIAL GENERAL LIABILITY** [ ] CLAIMS-MADE [X] OCCUR GEN'L AGGREGATE LIMIT APPLIES PER: X POLICY [ ] PRO-JECT [ ] LOC [ ] OTHER:	Y	Y	7091833236	6/1/2025	6/1/2026	EACH OCCURRENCE DAMAGE TO RENTED PREMISES (Ea occurrence) MED EXP (Any one person) PERSONAL & ADV INJURY GENERAL AGGREGATE PRODUCTS - COMP/OP AGG 	$ 1,000,000 $ 1,000,000 $ 10,000 $ 1,000,000 $ 2,000,000 $ 2,000,000 $
B	**AUTOMOBILE LIABILITY** X ANY AUTO [ ] OWNED AUTOS ONLY [ ] SCHEDULED AUTOS [ ] HIRED AUTOS ONLY [ ] NON-OWNED AUTOS ONLY	Y	Y	7091833222	6/1/2025	6/1/2026	COMBINED SINGLE LIMIT (Ea accident) BODILY INJURY (Per person) BODILY INJURY (Per accident) PROPERTY DAMAGE (Per accident) 	$ 1,000,000 $ XXXXXXX $ XXXXXXX $ XXXXXXX $ XXXXXXX
C	X **UMBRELLA LIAB** [X] OCCUR **EXCESS LIAB** [ ] CLAIMS-MADE [ ] DED [ ] RETENTION $	Y	Y	7091833219	6/1/2025	6/1/2026	EACH OCCURRENCE AGGREGATE 	$ 1,000,000 $ 1,000,000 $ XXXXXXX
D E	**WORKERS COMPENSATION AND EMPLOYERS' LIABILITY** ANY PROPRIETOR/PARTNER/EXECUTIVE OFFICER/MEMBER EXCLUDED? Y / N: N **(Mandatory in NH)** If yes, describe under DESCRIPTION OF OPERATIONS below	N / A	Y	7091833186 7091833205	6/1/2025 6/1/2025	6/1/2026 6/1/2026	X PER STATUTE [ ] OTH-ER E.L. EACH ACCIDENT E.L. DISEASE - EA EMPLOYEE E.L. DISEASE - POLICY LIMIT	 $ 1,000,000 $ 1,000,000 $ 1,000,000

DESCRIPTION OF OPERATIONS / LOCATIONS / VEHICLES (ACORD 101, Additional Remarks Schedule, may be attached if more space is required)

RE: PROJECT NAME: CITY OF SANTA FE PROFESSIONAL SERVICES AGREEMENT. CITY OF SANTA FE IS AN ADDITIONAL INSURED AS RESPECTS GENERAL LIABILITY, AUTO LIABILITY AND UMBRELLA/EXCESS LIABILITY, IF REQUIRED BY WRITTEN CONTRACT. WAIVER OF SUBROGATION APPLIES TO GENERAL LIABILITY, AUTO LIABILITY, EXCESS/UMBRELLA LIABILITY, AND WORKERS COMPENSATION/EMPLOYER'S LIABILITY, WHERE ALLOWED BY STATE LAW AND IF REQUIRED BY WRITTEN CONTRACT.

CERTIFICATE HOLDER

17564808
CITY OF SANTA FE
PUBLIC WORKS DEPARTMENT – ENGINEERING DIVISION
PO BOX 909
SANTA FE NM 87504-0909

CANCELLATION

SHOULD ANY OF THE ABOVE DESCRIBED POLICIES BE CANCELLED BEFORE THE EXPIRATION DATE THEREOF, NOTICE WILL BE DELIVERED IN ACCORDANCE WITH THE POLICY PROVISIONS.

AUTHORIZED REPRESENTATIVE

Joseph M Agnello

© 1988-2015 ACORD CORPORATION. All rights reserved.

City of Santa Fe, New Mexico
Memorandum

DATE: July 5, 2024

TO: Governing Body

VIA: Regina Wheeler
Regina Wheeler (Jul 8, 2024 14:55 MDT)
Regina Wheeler, Public Works Department Director

FROM: Romella Glorioso-Moss, PhD, CPM, Complete Streets Capital Projects Manager RGM

ACTION:
Request for Approval of Professional Services Agreement with Wilson & Co., Inc. Engineers and Architects to Provide On-Call General Engineering Services in an Amount Not to Exceed $5,409,375 including NMGRT for Four Years. (Romella Glorioso-Moss, Capital Projects Manager: rsglorioso-moss@santafenm.gov)

BACKGROUND AND SUMMARY:
Pursuant to New Mexico Procurement Code Section 1.4.1.31, RFP 24001 was issued with the purpose of establishing multiple on call contracts for professional general engineering services to support infrastructure projects including roadway, trail, drainage, bridge, facility, parks, utility, transit and others. The RFP process determined that awarding an on-call contract to Wilson & Co., Inc. Engineers and Architects is in the best interest and is advantageous to the City of Santa Fe. A total of 7 contracts are recommended for award as a result of this RFP. Having multiple professional service firms under contract provides capacity and expertise to deploy the City's extensive state and federal infrastructure funding. Having multiple vendors under on-call contract also facilitates the solicitation of multiple quotations on any particular piece of work and selection of best value provider for a particular task.

The total amount payable to the Contractor under this Agreement, including gross receipts tax and expenses, shall not exceed $5,409,375 over 4 years. Execution of this agreement does not constitute any promise to purchase any amount of work. Funds for these services will be identified and budgeted, as needed, for each individual capital improvement project.

PROCUREMENT METHOD:
The procurement method is via RFP 24001.

FUNDING SOURCE:
Fund Name/Number: Various
Munis Org Name/Number: Various
Munis Object Name/Number: Various
Project ID / String: various

ATTACHMENTS
Professional Services Agreement
Procurement Checklist
Summary of Contract
Business Registration
Coverage of Insurance

Halona Crowe
Reviewed by Halona Crowe

Item #: 24-0483
Munis Contract #: _____
RFP#: 24001

CITY OF SANTA FE

PROFESSIONAL SERVICES CONTRACT

THIS CONTRACT is made and entered into by and between the City of Santa Fe, New Mexico, hereinafter referred to as the "City," and **Wilson & Company, Inc., Engineers & Architects**, hereinafter referred to as the "Contractor," and is effective as of the date set forth below upon which it is executed by the Parties.

RECITALS

WHEREAS, the Chief Procurement Officer of the City has made the determination that this Agreement is in accordance with the provisions of the New Mexico Procurement Code (NMSA 1978, 13-1-28 et seq.) pursuant to NMSA 1978, section 13-1-111; and

WHEREAS, the Contractor is one of such requisite knowledge and qualifications and is willing to engage with the City for professional services, in accordance with the terms and conditions hereinafter set out, and the Contractor understanding and consenting to the foregoing is willing to render such professional services as outlined in the Agreement; and

The City and the Contractor hereby agree as follows:

1. Scope of Work

The Contractor shall provide the following services for the City:

The Professional Engineer (PE) shall provide On-Call General Engineering Services and Construction Management Services for the design and construction of roadway, trail, drainage, facility, utility and traffic design. Once the City identifies a need, the City will issue a written task order to the PE that will detail required services. Upon receiving the City's request for services, the PE shall provide the City with an estimate of man-hours required to do the work and the parties will negotiate the tasks for each project on a project-by-project basis. The PE may be required to do the project work in phases. Where a project proceeds in phases based on the development model used by the City, the PE shall provide the work estimate for each phase.

Work estimates shall be based on producing the deliverables described in the development model below for the tasks or phase(s) in the task order.

1. PROJECT DEVELOPMENT PHASES

a. Phase 1 - Project Scoping

The PE will review available data, define project scope, conduct scoping field review, and write scoping report in accordance with guidelines of the New Mexico Department of Transportation.

1. Phase 1 Activities:

i. Understanding and documenting existing conditions, environmental, and right-of way needs
ii. Identifying design parameters for the project
iii. Documenting safety considerations
iv. Describing proposed improvements
v. Conducting a preliminary field review meeting
vi. Developing a preliminary engineer's estimate

2. Phase 1 Deliverables
   a. Scoping Report
   The following defines the required contents of the Scoping Report. The PE should evaluate all items listed below but some elements may not apply based on the project type.

      i. Project Summary/General Description
         a) Project data
            - Control number
            - Type of work
            - Project purpose and need
            - Location description
            - Posted route
            - Milepost (coordinates and/or intersections)
            - Project length
            - NMDOT district
            - County
            - Roadway functional classification
            - Terrain type
            - Fiscal year (study, design, construction) and project Termination Date
            - Program (funding category)
         b) Site description (beginning of project to end of project)
         c) Survey requirements (location and/or property survey)
         d) Right-of-way requirements
         e) Environmental Level of Effort (ELOE)
         f) Estimated project development time (from scoping to letting) all within agreement contract time
         g) Estimated project construction schedule and budget

      ii. Existing Conditions (where applicable)
         a) Typical road section
            - Driving lanes per direction
            - Auxiliary lanes (acceleration, deceleration, and turning lanes) and medians
            - Shoulders (including rumble strips/stripes) and/or curb and gutter
            - Surfacing tapers
            - Multi-modal facilities (including transit, pedestrian and bicycle facilities)
         b) Roadside slopes

c) Geotechnical conditions
d) Surfacing type and condition
e) Horizontal alignment
f) Vertical alignment
g) Major and minor roadway intersections
h) Right-of-way width
i) Major structures (> 20-foot span)
j) Other structures (< 20-foot span, may include fencing, retaining walls, cattle guards, concrete box culverts, safety barriers, etc.)
k) Roadway lighting
l) Traffic control and management devices (traffic signals, intelligent transportation system (ITS) equipment, special traffic signs, etc.)
m) Utilities (inventory and owners)
n) Environmental factors
o) Posted speed limit and design speed
p) Driveway and entrances (inventory)
q) Level of service (traffic volume and fleet characteristics)
r) Facilities and compliance with the Americans with Disabilities Act (ADA)
s) Railroad facilities (identify, should include railroad right-of-way, crossings, etc.)
t) Erosion control and landscaping installations
u) School crossings
v) Safety considerations

iii. Proposed Improvements
a) Typical section (including surfacing type and thickness)
b) Major structures
c) Other structures
d) Horizontal alignment
e) Vertical alignment
f) Intersections
g) Turnouts
h) Safety
i) Drainage and erosion control
j) Design exceptions/ variances
k) Detours and traffic control
l) Warrants and signalization
m) Landscaping and irrigation
n) ADA/ pedestrian/ bicycle
o) Special issues or unique project elements

iv. Factors Affecting Project Development and Schedule
a) Survey requirements
b) Environmental requirements and certification
- Archaeological requirements
- Historic preservation requirements (include the State Historic Preservation Officer (SHPO) or Tribal Historic Preservation Officer (THPO)

- Hazardous materials investigations
- Right-of-way (ROW) considerations and certification
- Utility relocations and/or hookups and utility certification
- Outside agency involvement and coordination
- Railroad facilities and certification
- ITS facilities and certification

b. Conceptual Design
Contractor shall inquire with the Director of Public Works to determine whether an Early Neighborhood Notification ("ENN") Meeting will be held for the project. If an ENN is to be held, Contractor shall develop a conceptual design based on the Project Scoping Report, and may be directed to present the conceptual design to the Public via the ENN Meeting described below. Conceptual design can be simply a series of sketches, ideas and explorations, or it can go to considerable depth, including design illustrations, indicative plans, sections and elevations and 3D models of a development approach.

c. ENN Meeting
An ENN is required for certain types of city capital improvement projects requiring review by the governing body as follows:

i. Facility plans for municipal facilities or services, including wastewater, solid waste, potable water and airport facilities.
ii. New projects or projects to expand or extend service to new service areas included in the capital improvement plan or general plan.
iii. Any new road construction or reconstruction of an existing road that materially expands capacity.
iv. Projects funded out of capital impact fee funds.
v. Any new park or reconstruction or expansion of an existing park that exceeds one acre in size or one hundred and fifty thousand dollars ($150,000) in cost.
vi. Construction of a new building or structure at a park or placement of new lighting at a park that exceeds one hundred and fifty thousand dollars ($150,000) in cost.

See APPENDIX A for the ENN Requirements.

b. Phase II – Preliminary Design (30% Design)

Preliminary design defines the general project location and design concepts. It includes, but is not limited to, preliminary engineering and other activities and analyses, such as environmental assessments, topographic surveys, metes and bounds surveys, geotechnical investigations, hydrologic analysis, hydraulic analysis, utility engineering, traffic studies, financial plans, revenue estimates, hazardous materials assessments, general estimates of the types and quantities of materials, and other work needed to establish parameters for the final design. Preliminary design should focus on establishing the horizontal and vertical alignments, typical section, and drainage and structural needs to a level sufficient to establish the project footprint. Contractor shall develop a preliminary design to the standard of the NMDOT for a 30% level of completion.

1. Phase 2 Activities

The following activities should be initiated, if applicable, or required by the Scoping Report:

i. Complete Drainage Report
ii. Development of typical sections, grading plans, geometric alignments
iii. Bridge type/size/location studies, temporary structure requirements, staged bridge construction requirements
iv. Structural design, retaining wall design, noise wall design
v. Guardrail length/layout
vi. Existing property lines
vii. Title and deed research
viii. Soil borings
ix. Cross sections with flow line elevations
x. Ditch designs
xi. Intersection design/configuration
xii. Interchange design/configurations
xiii. Pavement design
xiv. Storm/sanitary sewer design
xv. Culvert design, identification of removal items
xvi. Quantity estimates
xvii. Pavement details/elevation tables
xviii. Preliminary traffic control plans to be maintained during construction
xix. Coordinate railroad impacts
xx. Coordinate ITS impacts and improvements
xxi. Identify utility owners, records research, and begin utility coordination for Subsurface Utility Engineering (SUE)
xxii. Continue documentation for environmental, cultural resource, and hazardous materials investigations, and obtain approvals
xxiii. Hold ENN meeting (APPENDIX A)

If additional right-of-way is needed, the following additional activities need to occur in order during Preliminary Design.

i. Complete property survey
ii. Based on the project footprint, identify cultural and biological resource impacts and prepare plans for avoidance or mitigation .
iii. If there are right-of-way impacts, the PE will schedule a meeting with the NMDOT's Right of Way Bureau and the Tribal/Local Public Agency Coordinator of North Region Design.
iv. Begin Title Search and Title Reports

2. Phase 2 Deliverables

Typically, preliminary design would require a final geotechnical report, a final drainage report, utility location and mapping, right-of-way design and legal descriptions, roadway plan and profiles, bridge and structure types and criteria, plan and profile sheets, a preliminary traffic control plan, a National Pollution Discharge Elimination System (NPDES) permit, and an engineer's construction cost estimate.

The PE shall use the NMDOT format for plan sets with standard information to be completed to a level consistent with the design stage. For NMDOT series sheets standards please refer to the "Tribal/Local Public Agency Handbook", 2019 or most current edition.

c. Phase III – Grade and Drain (60% Design)

The engineer shall address all comments on the 30% complete Preliminary Design by City Staff, including but not limited to Complete Streets, Parks and Open Spaces, Land Use, Public Utilities, and SFMPO, as well as comments by the Bicycle and Pedestrian Advisory Committee and comments from the NMDOT review meeting. All of the components in the 30% Preliminary Design phase are further developed and designed to a greater level of detail.

1. Phase III Activities
   - i. Design drainage improvements
   - ii. Finalize project footprint
   - iii. Complete quantity schedules (if not included in the preliminary plans) and ensure they reflect computed design quantities
   - iv. Prepare and submit design variance and/or exceptions (if applicable)
   - v. Continue with environmental approvals
   - vi. Continue right-of-way process
   - vii. Develop preliminary traffic control plans including a suggested sequence of construction.
   - viii. Submit engineer's estimate
   - ix. Prepare and submit draft contract book, including specifications, special provisions and Notice to Contractor (NTC)
   - x. Incorporate ITS sheets, if necessary
   - xi. Incorporate rail design or mitigation and coordinate rail agreements and special provisions, as required
   - xii. Submit all Public Interest Findings (PIF) requests, if applicable
   - xiii. Coordinate the Storm Water Pollution Prevention Plan (SWPPP) sheets and Temporary Erosion and Sediment Control Plan (TESCP) sheets with the City's River and Watershed Manager (if the project's disturbed area is greater than one acre)
   - xiv. Begin Utility Relocation documentation (if applicable) for utility certification

2. Phase III Deliverables
   Submit to the City's Project Manager the 60% design plan set for review at least 2 weeks in advance of review meeting.

d. Phase 1V - Plan-in-Hand (90% Design)

Comments from the 60% Design review meeting and Constructability Review, when applicable, are incorporated during the 90% Design phase. At 90% Design, the plans, quantities, and engineer's estimate should be nearly complete. Only minor design changes should be occurring at (or after) this design phase. During the 90% Design phase, construction phasing layouts and construction signing, and striping plans are finalized, and project

certification requests are completed and requested from NMDOT's North Region Design Coordinator or T/LPA Coordinator.

1. Phase IV Activities
   i. Finalize plans
   ii. Finalize right-of-way coordination/certification
   iii. Finalize utilities coordination/certification
   iv. Finalize ITS coordination/certification
   v. Finalize railroad coordination/certification
   vi. Finalize environmental certification
   vii. Complete work zone checklist
   viii. Start plans, specifications, and estimates (PS&E) checklist
   ix. Finalize project cost estimate, including testing, construction management, and utility relocation when applicable
   x. Request Disadvantaged Business Enterprise Program (DBE) goal from the Region Coordinator, if applicable
   xi. Finalize project specifications and contract book, including all federal requirements
   xii. If project-specific special provisions are required, those must be submitted to the NMDOT's North Region Design Coordinator or T/LPA Coordinator for review and approval
   xiii. If project-specific Notice to Contractors (NTCs) are required, those must be submitted to the NMDOT's North Region Design Coordinator or T/LPA Coordinator for review and approval

2. Phase IV Deliverables
   The 90% design plans shall include as appropriate: cover sheet, title sheet, typical roadway sections, quantity sheets, general notes, SWPPP Information sheet, TESCP sheets, plan and profile sheets, roadway, trail, interchange and intersection plans, structure placement sheets, special details, bridge plans and foundation recommendations, traffic control and detour plans, permanent signing and striping, signalization, lighting plans, grading plans, earthwork computations, landscape details and/or plans, incorporation of standard plans and those prepared by others, final detail estimate and proposal, supplemental specifications, notice to contractors, and special provisions as required and all other plans/specifications as may be required.

   The 90% design plan set shall further include five (5) required NMDOT certifications. Environmental, ROW, Utility, Railroad, and Intelligent Transportation System (ITS) certifications must be submitted to City's Project Administrator at least two (2) weeks prior the review meeting.

e. Phase V - Plans, Specifications, and Estimate (PS&E)

The PS&E phase incorporates the comments from the 90% Design review meeting and finalizes the plans, quantities, and engineer's estimate. The contract book and specifications are complete, and all certifications are obtained prior to holding the PS&E review.

1. PS&E Deliverables
   a. PS&E package (to be submitted to City Project Administrator at least one week before NMDOT's annual deadline of June 1st)
      i. 100% construction plans
      ii. Engineer's opinion of probable cost
      iii. Contract book
      iv. Environmental clearance and certification documentation
      v. SHPO's concurrence
      vi. Right-of-way certification documentation
      vii. Utility certification documentation
      viii. ITS certification documentation
      ix. Railroad certification documentation
      x. Work zone checklist
      xi. All other applicable maintenance agreements
      xii. PS&E checklist
      xiii. Approved Public Interest Findings (PIFs) and/or variances if applicable

   b. Project Production Package (to be submitted to City Project Administrator at least one week before NMDOT's annual deadline of June 15th)
      i. Stamped and sealed construction plans
      ii. Engineer's opinion of probable cost (including Construction Management if using federal funding to cover these expenses and utility relocation when applicable)
      iii. Contract book (may leave out wage decisions until ready to bid because they can change over time)
      iv. Environmental clearance and certification documentation, including signed environmental commitments sheet in the construction plans
      v. SHPO's or THPO's concurrence
      vi. Right-of-way certification documentation
      vii. Utility certification documentation
      viii. ITS certification documentation
      ix. Railroad certification documentation
      x. Work zone checklist
      xi. All other applicable maintenance agreements
      xii. Signed PS&E checklist
      xiii. Approved PIFs and/or variances if applicable

f. Phase VI - Construction Engineering and Management Services

Construction Engineering and Management Services begins when the City advertises, bids and awards the project.

Upon request, the PE shall review bids and/or offers and provide an opinion to the City's Central Purchasing Office as to whether the bids and/or offers fully address the Invitation to Bid and/or Request for Proposals, and shall recommend selection of a bidder or offeror with written justification for that recommendation.

When a contract is awarded by the City in relation to the project, the PE shall fully execute and participate in the following tasks to implement the construction of the Project in conformance with the plans and specifications:

1. Hold Transition Meeting with City Project Administrator and NMDOT/FHWA Staff to discuss the required project documentation, format for submittals, and procedures to be used to ensure adequate management of a federally-funded construction project.
2. Hold Preconstruction Conference.
3. Duties during construction:
   i. Daily documentation and maintain a project management diary
   ii. Verify all construction activities and documentation meet NMDOT and federal standards and policies
   iii. Supervise activities for government and third-party inspectors and office personnel
   iv. Administer change orders in compliance with the change order provisions stated in the Tribal/Local Public Agency Handbook (current edition).
   v. Coordinate all project activities
   vi. Maintain public relations
   vii. Address all problems and/or concerns related to project designs and plans.
   viii. Approve all project documentation and submittals (including source books, certificates of complianceNPDES permit, payrolls, subcontracts, traffic control diary, quality control plan, and testing reports).
   ix. Enforce contractor's compliance with contract requirements (i.e., Buy America, Disadvantaged Business Enterprise (DBE), EEO, traffic control/safety, etc.)
   x. Administer monthly progress payments
   xi. Reject defective and/or non-compliant material and workmanship, in accordance with the contract
   xii. Interpret the plans and specifications
   xiii. Verify construction activities meet contractor schedule
   xiv. Designate a person familiar with Storm Water Pollution (SWPP) Plan Preparation and Maintenance to review the work of contractors and provide an opinion on compliance to the Public Works Director, when applicable. In order to be considered "familiar," that person would need to have attended the Associated Contractors of New Mexico (ACNM) class "Storm Water Qualified Person" or equivalent.
   xv. Approve the contractor's Quality Control Plan per Section 902, Quality Control, of the NMDOT Standard Specifications at least two weeks prior to the start of any work being performed that requires QC testing for acceptance. Once the Quality Control Plan is approved, PE shall verify that it is on file.
   xvi. Review and approve any proposed changes to the traffic control plan at least two weeks prior to implementation. Ensure the revisions have been designed in accordance with 23 CFR § 630 Subpart J – Work Zone Safety and Mobility and 23 CFR § 630 Subpart K – Temporary Traffic Control Devices and are stamped by a current New Mexico Licensed Professional Engineer. If any part of the revised traffic control will be located on an NMDOT roadway, concurrence from the District Traffic Engineer is required prior to approval by the City project manager. Unapproved changes shall not be allowed in the field.

xvii. Ensure proper B2Gnow and LCPtracker reporting.
xviii. Review and approve progress payments.
xix. Prepare for Project Closure and Final Inspection.

4. Duties after construction

Prepare and submit the Final Package to NMDOT.

In all cases where the PE is responsible for acceptance of a deliverable, payment of invoices remains subject to acceptance by city staff pursuant to Section 3(D) above.

2. Standard of Performance; Licenses

A. The Contractor does hereby accept its designation as a professional service, rendering services related to general engineering and construction management services for the City, as set forth in this Agreement. The Contractor represents that Contractor possesses the personnel, experience, and knowledge necessary to perform the services described under this Contract.

B. The Contractor agrees to obtain and maintain throughout the term of this Contract, all applicable professional and business licenses required by law, for itself, its employees, agents, representatives, and subcontractors.

3. Compensation

A. The City shall pay to the Contractor in full payment for services satisfactorily performed as per Task Order, such compensation not to exceed five million dollars ($5,000,000), excluding gross receipts tax. The New Mexico gross receipts tax levied on the amounts payable under this Contract totaling four hundred nine thousand three hundred seventy-five dollars ($409,375) shall be paid by the City to the Contractor. **The total amount payable to the Contractor under this Agreement, including gross receipts tax and expenses, shall not exceed five million four hundred nine thousand three hundred seventy-five dollars ($5,409,375). This amount is a maximum and not a guarantee that the work assigned to be performed by Contractor under this Contract shall equal the amount stated herein. The parties do not intend for the Contractor to continue to provide services without compensation when the total compensation amount is reached. Contractor is responsible for notifying the City when the services provided under this Contract reach the total compensation amount. In no event will the Contractor be paid for services provided in excess of the total compensation amount without this Contract being amended in writing prior to those services in excess of the total compensation amount being provided.**

B. Payment is subject to availability of funds pursuant to the Appropriations Paragraph set forth below and to any negotiations between the parties from year to year pursuant to Paragraph 1, Scope of Work, and to approval by the City. All invoices MUST BE received by the City no later than thirty 30) days after the termination of the Fiscal Year in which the services were delivered. Invoices received after such date WILL NOT BE PAID.

C. Payment in future fiscal years is subject to availability of funds pursuant to the Appropriations Paragraph set forth below and to any negotiations between the parties from year to year pursuant to Paragraph 1, Scope of Work, and to approval by the City. All invoices MUST BE received by the City no later than fifteen (15) days after the termination of the Fiscal Year in which the services were delivered.

Invoices received after such date WILL NOT BE PAID.)

D. Contractor must submit a detailed statement accounting for all services performed and expenses incurred. If the City finds that the services are not acceptable, within thirty days after the date of receipt of written notice from the Contractor that payment is requested, it shall provide the Contractor a letter of exception explaining the defect or objection to the services, and outlining steps the Contractor may take to provide remedial action. Upon certification by the City that the services have been received and accepted, payment shall be tendered to the Contractor within thirty days after the date of acceptance. If payment is made by mail, the payment shall be deemed tendered on the date it is postmarked.

E. If the City fails to pay the contractor within twenty-one days after receipt of an undisputed request for payment, the City shall pay interest to the contractor beginning on the twenty-second day after payment was due, computed at one and one-half percent of the undisputed amount per month or fraction of a month until the payment is issued. If the City receives an improperly completed invoice, the City shall notify the sender of the invoice within seven days of receipt in what way the invoice is improperly completed, and the owner has no further duty to pay on the improperly completed invoice until it is resubmitted as complete.

F. **Notice of Extended Payment Provision For Grant Funded Contracts**. This contract allows the owner to make payment within 45 days after submission of an undisputed request for payment.

4. Term

THIS CONTRACT SHALL NOT BECOME EFFECTIVE UNTIL APPROVED BY THE CITY. This Contract shall terminate **four (4) years from date of final signature** unless terminated pursuant to paragraph 5 (Termination) and paragraph 6 (Appropriations) in accordance with NMSA 1978, Sections 13-1-150 through 152.

5. Termination

A. Grounds. The City may terminate this Agreement for convenience or cause. For contracts within their authority, the City Manager or their designee is authorized to provide the notice of termination, otherwise such notice of termination shall be provided by the Mayor or their designee as authorized by the Governing Body. The Contractor may only terminate this Agreement based upon the City's uncured, material breach of this Agreement.

B. Notice; City Opportunity to Cure.

1) The City shall give Contractor written notice of termination at least thirty (30) days prior to the intended date of termination.

2) Contractor shall give City written notice of termination at least thirty (30) days prior to the intended date of termination, which notice shall (i) identify all the City's material breaches of this Agreement upon which the termination is based and (ii) state what the City must do to cure such material breaches. Contractor's notice of termination shall only be effective (i) if the City does not cure all material breaches within the thirty (30) day notice period or (ii) in the case of material breaches that cannot be cured within thirty (30) days, the City does not, within the thirty (30) day notice period, notify the Contractor of its intent to cure and begin with due diligence to cure the material breach.

3) Notwithstanding the foregoing, this Agreement may be terminated immediately upon written notice to the Contractor (i) if the Contractor becomes unable to perform the services contracted for, as determined by the City; (ii) if, during the term of this Agreement, the Contractor is suspended or debarred by the City; or (iii) the Agreement is terminated pursuant to

Paragraph 6, "Appropriations", of this Agreement.

C. Liability. Except as otherwise expressly allowed or provided under this Agreement, the City's sole liability upon termination shall be to pay for acceptable work performed prior to the Contractor's receipt or issuance of a notice of termination; provided, however, that a notice of termination shall not nullify or otherwise affect either party's liability for pre-termination defaults under or breaches of this Agreement. The Contractor shall submit an invoice for such work within thirty (30) days of receiving or sending the notice of termination. *THIS PROVISION IS NOT EXCLUSIVE AND DOES NOT WAIVE THE CITY'S OTHER LEGAL RIGHTS AND REMEDIES CAUSED BY THE CONTRACTOR'S DEFAULT/BREACH OF THIS AGREEMENT.*

6. Appropriations

The terms of this Contract are contingent upon sufficient appropriations and authorization being made by the Governing Body for the performance of this Contract. If sufficient appropriations and authorization are not made by the Governing Body, this Contract shall terminate immediately upon written notice being given by the City to the Contractor. The City's decision as to whether sufficient appropriations are available shall be accepted by the Contractor and shall be final. If the City proposes an amendment to the Contract to unilaterally reduce funding, the Contractor shall have the option to terminate the Contract or to agree to the reduced funding, within thirty (30) days of receipt of the proposed amendment.

7. Status of Contractor

The Contractor and its agents and employees are independent contractors performing professional services for the City and are not employees of the City. The Contractor and its agents and employees shall not accrue leave, retirement, insurance, bonding, use of City vehicles, or any other benefits afforded to employees of the City as a result of this Contract. The Contractor acknowledges that all sums received hereunder are reportable by the Contractor for tax purposes, including without limitation, self-employment and business income tax. The Contractor agrees not to purport to bind the City unless the Contractor has express written authority to do so, and then only within the strict limits of that authority.

8. Assignment

The Contractor shall not assign or transfer any interest in this Contract or assign any claims for money due or to become due under this Contract without the prior written approval of the City.

9. Subcontracting

The Contractor shall not subcontract any portion of the services to be performed under this Contract without the prior written approval of the City. No such subcontract shall relieve the primary Contractor from its obligations and liabilities under this Contract, nor shall any subcontract obligate direct payment from the City.

10. Release

Final payment of the amounts due under this Contract shall operate as a release of the City, its officers and employees from all liabilities, claims and obligations whatsoever arising from or under this Contract.

11. Confidentiality

Any confidential information provided to or developed by the Contractor in the performance of this Contract shall be kept confidential and shall not be made available to any individual or organization by the Contractor without the prior written approval of the City.

12. Product of Service -- Copyright

All materials developed or acquired by the Contractor under this Contract shall become the property of the City and shall be delivered to the City no later than the termination date of this Contract. Nothing developed or produced, in whole or in part, by the Contractor under this Contract shall be the subject of an application for copyright or other claim of ownership by or on behalf of the Contractor.

13. Conflict of Interest; Governmental Conduct Act

A. The Contractor represents and warrants that it presently has no interest and, during the term of this Contract, shall not acquire any interest, direct or indirect, which would conflict in any manner or degree with the performance or services required under the Contract.

B. The Contractor further represents and warrants that it has complied with, and, during the term of this Contract, will continue to comply with, and that this Contract complies with all applicable provisions of the Governmental Conduct Act, Chapter 10, Article 16 NMSA 1978.

C. Contractor's representations and warranties in Paragraphs A and B of this Article are material representations of fact upon which the City relied when this Contract was entered into by the parties. Contractor shall provide immediate written notice to the City if, at any time during the term of this Contract, Contractor learns that Contractor's representations and warranties in Paragraphs A and B of this Article were erroneous on the effective date of this Contract or have become erroneous by reason of new or changed circumstances. If it is later determined that Contractor's representations and warranties in Paragraphs A and B of this Article were erroneous on the effective date of this Contract or have become erroneous by reason of new or changed circumstances, in addition to other remedies available to the City and notwithstanding anything in the Contract to the contrary, the City may immediately terminate the Contract.

D. All terms defined in the Governmental Conduct Act have the same meaning in this section.

14. Amendment

A. This Agreement shall not be altered, changed, or amended except by instrument in writing executed by the parties hereto and all other required signatories.

B. If the City proposes an amendment to the Contract to unilaterally reduce funding due to budget or other considerations, the Contractor shall, within thirty (30) days of receipt of the proposed Amendment, have the option to terminate the Contract, pursuant to the termination provisions as set forth in Article 4 herein, or to agree to the reduced funding.

15. Entire Agreement.

This Agreement, together with any other documents incorporated herein by reference and all related Exhibits and Schedules constitutes the sole and entire agreement of the Parties with respect to the subject matter of this Agreement, and supersedes all prior and contemporaneous understandings, agreements, representations, and warranties, both written and oral, with respect to the subject matter. In the event of any inconsistency between the statements in the body of this Agreement, and the related Exhibits and Schedules, the statements in the body of this Agreement shall control.

16. Merger

This Contract incorporates all the Agreements, covenants and understandings between the parties hereto concerning the subject matter hereof, and all such covenants, agreements, and understandings have been merged into this written contract.

All terms and conditions of the **RFP #24001 On-Call General Engineering Services for Roadway, Trail, Bridge, Drainage, Facility, Utility and Traffic Design** and the Contractor's response to such document(s) are incorporated herein by reference and is included in the order of precedence.

No prior Agreement or understanding, oral or otherwise, of the parties or their agents shall be valid or enforceable unless embodied in this Contract.

17. Penalties for violation of law

NMSA 1978, sections 13-1-28 through 13-1-199, imposes civil and criminal penalties for its violation. In addition, the New Mexico criminal statutes impose felony penalties for illegal bribes, gratuities, and kickbacks.

18. Equal Opportunity Compliance

The Contractor agrees to abide by all federal and state laws and rules and regulations, and Santa Fe City Code, pertaining to equal employment opportunity. In accordance with all such laws of the State of New Mexico, the Contractor assures that no person in the United States shall, on the grounds of race, religion, color, national origin, ancestry, sex, age, physical or mental handicap, or serious medical condition, spousal affiliation, sexual orientation or gender identity, be excluded from employment with or participation in, be denied the benefits of, or be otherwise subjected to discrimination under any program or activity performed under this Contract. If Contractor is found not to be in compliance with these requirements during the life of this Contract, Contractor agrees to take appropriate steps to correct these deficiencies.

19. Applicable Law

The laws of the State of New Mexico shall govern this Contract, without giving effect to its choice of law provisions. Venue shall be proper only in a New Mexico court of competent jurisdiction in accordance with NMSA 1978, section 38-3-2. By execution of this Contract, Contractor acknowledges and agrees to the jurisdiction of the courts of the State of New Mexico over any and all lawsuits arising under or out of any term of this Contract.

20. Workers Compensation

The Contractor agrees to comply with state laws and rules applicable to workers compensation benefits for its employees. If the Contractor fails to comply with the Workers Compensation Act and applicable rules when required to do so, this Contract may be terminated by the City.

21. Professional Liability Insurance

Contractor shall maintain professional liability insurance throughout the term of this Contract providing a minimum coverage in the amount required under the New Mexico Tort Claims Act. The Contractor shall furnish the City with proof of insurance of Contractor's compliance with the provisions of this section as a condition prior to performing services under this Contract.

22. Other Insurance

If the services contemplated under this Contract will be performed on or in City facilities or property, Contractor shall maintain in force during the entire term of this Contract, the following insurance coverage(s), naming the City as additional insured.

A. **Commercial General Liability** insurance shall be written on an occurrence basis and be a broad as ISO Form CG 00 01 with limits not less than $2,000,000 per occurrence and $2,000,000 in the aggregate for claims against bodily injury, personal and advertising injury, and property damage. Said policy shall include broad form Contractual Liability coverage and be endorsed to name the City of Santa Fe their officials, officers, employees, and agents as additional insureds.

B. **Business Automobile Liability** insurance for all owned, non-owned automobiles, with a combined single limit not less than $1,000,000 per accident.

C. **Broader Coverage and Limits**. The insurance requirements under this Contract shall be the greater of (1) the minimum coverage and limits specified in this Contract, or (2) the broader coverage and maximum limits of coverage of any insurance policy or proceeds available to the Named Insured. It is agreed that these insurance requirements shall not in any way act to reduce coverage that is broader or that includes higher limits than the minimums required herein. No representation is made that the minimum insurance requirements of this Contract are sufficient to cover the obligations of Contractor hereunder.

D. Contractor shall maintain the above insurance for the term of this Contract and name the City as an additional insured and provide for 30 days cancellation notice on any Certificate of Insurance form furnished by Contractor. Such certificate shall also specifically state the coverage provided under the policy is primary over any other valid and collectible insurance and provide a waiver of subrogation.

23. Records and Financial Audit

The Contractor shall maintain detailed time and expenditure records that indicate the date; time, nature and cost of services rendered during the Contract's term and effect and retain them for a period of three (3) years from the date of final payment under this Contract. The records shall be subject to inspection by the City. The City shall have the right to audit billings both before and after payment. Payment under this Contract shall not foreclose the right of the City to recover excessive or illegal payments.

24. Indemnification

The Contractor shall defend, indemnify and hold harmless the City from all actions, proceeding, claims, demands, costs, damages, attorneys' fees and all other liabilities and expenses of any kind from any source which may arise out of the performance of this Contract, caused by the negligent act or failure to act of the Contractor, its officers, employees, servants, subcontractors or agents, or if caused by the actions of any client of the Contractor resulting in injury or damage to persons or property during the time when the Contractor or any officer, agent, employee, servant or subcontractor thereof has or is performing services pursuant to this Contract. If any action, suit or proceeding related to the services performed by the Contractor or any officer, agent, employee, servant or subcontractor under this Contract is brought against the Contractor, the Contractor shall, as soon as practicable but no later than two (2) days after it receives notice thereof, notify the legal counsel of the City.

25. New Mexico Tort Claims Act

Any liability incurred by the City of Santa Fe in connection with this Contract is subject to the immunities

and limitations of the New Mexico Tort Claims Act, Section 41-4-1, et. seq. NMSA 1978, as amended. The City and its "public employees" as defined in the New Mexico Tort Claims Act, do not waive sovereign immunity, do not waive any defense and do not waive any limitation of liability pursuant to law. No provision in this Contract modifies or waives any provision of the New Mexico Tort Claims Act.

26. Invalid Term or Condition

If any term or condition of this Contract shall be held invalid or unenforceable, the remainder of this Contract shall not be affected and shall be valid and enforceable.

27. Enforcement of Contract

A party's failure to require strict performance of any provision of this Contract shall not waive or diminish that party's right thereafter to demand strict compliance with that or any other provision. No waiver by a party of any of its rights under this Contract shall be effective unless express and in writing, and no effective waiver by a party of any of its rights shall be effective to waive any other rights.

28. Notices

Any notice required to be given to either party by this Contract shall be in writing and shall be delivered in person, by courier service or by U.S. mail, either first class or certified, return receipt requested, postage prepaid, as follows:

To the City: Regina Wheeler, Public Works Department Director, City of Santa Fe, P.O. Box 909 Santa Fe, NM 87504-0909, rawheeler@santafenm.gov.

To the Contractor: Daniel Aguirre, PE, Senior Vice President, Wilson & Company, Inc., Engineers & Architects, 4401 Masthead Street NE, Suite 150, Albuquerque, NM 87109, daniel.aguirre@wilsonco.com.

29. Authority

If Contractor is other than a natural person, the individual(s) signing this Contract on behalf of Contractor represents and warrants that he or she has the power and authority to bind Contractor, and that no further action, resolution, or approval from Contractor is necessary to enter a binding contract.

30. Non-Collusion

In signing this Agreement, the Contractor certifies the Contractor has not, either directly or indirectly, entered into action in restraint of free competitive bidding in connection with this offer submitted to the City's Chief Procurement Officer.

31. Default/Breach

In case of Default and/or Breach by the Contractor, for any reason whatsoever, the City may procure the goods or services from another source and hold the Contractor responsible for any resulting excess costs and/or damages, including but not limited to, direct damages, indirect damages, consequential damages, special damages, and the City may also seek all other remedies under the terms of this Agreement and under law or equity.

32. Equitable Remedies

The Contractor acknowledges that its failure to comply with any provision of this Agreement will cause the City irrevocable harm and that a remedy at law for such a failure would be an inadequate remedy for the City, and the Contractor consents to the City 's obtaining from a court of competent jurisdiction, specific performance,

or injunction, or any other equitable relief in order to enforce such compliance. The City's rights to obtain equitable relief pursuant to this Agreement shall be in addition to, and not in lieu of, any other remedy that the City may have under applicable law, including, but not limited to, monetary damages.

33. Default and Force Majeure

The City reserves the right to cancel all, or any part of any orders placed under this Agreement without cost to the City, if the Contractor fails to meet the provisions of this Agreement and, except as otherwise provided herein, to hold the Contractor liable for any excess cost occasioned by the City due to the Contractor's default. The Contractor shall not be liable for any excess costs if failure to perform the order arises out of causes beyond the control and without the fault or negligence of the Contractor; such causes include, but are not restricted to, acts of God or the public enemy, acts of the State or Federal Government, fires, floods, epidemics, quarantine restrictions, strikes, freight embargoes, unusually severe weather and defaults of subcontractors due to any of the above, unless the City shall determine that the supplies or services to be furnished by the subcontractor were obtainable from other sources in sufficient time to permit the Contractor to meet the required delivery scheduled. The rights and remedies of the City provided in this Clause shall not be exclusive and are in addition to any other rights now being provided by law or under this Agreement.

IN WITNESS WHEREOF, the Parties have executed this Contract as of the date of the signature by the required approval authorities below.

CITY OF SANTA FE:

Alan Webber (Aug 1, 2024 18:26 MDT)

ALAN WEBBER, CITY MAYOR

DATE: Aug 1, 2024

CONTRACTOR:
Wilson & Company, Inc., Engineers & Architects

DANIEL AGUIRRE, PE
SENIOR VICE PRESIDENT

DATE: Jul 3, 2024

CRS#: 02-357658-00-8

Registration #: NM 11955

ATTEST:

GERALYN CARDENAS XIV
INTERIM CITY CLERK
GB MTG 07/31/2024

CITY ATTORNEY'S OFFICE:

Marcos Martinez
Marcos Martinez (Jul 3, 2024 13:49 MDT)

MARCOS MARTINEZ
SENIOR ASSISTANT CITY ATTORNEY

APPROVED FOR FINANCES:

Emily K. Oster

EMILY OSTER, FINANCE DIRECTOR

APPENDIX A

EARLY NEIGHBORHOOD NOTIFICATION

Early Neighborhood Notification (ENN) Applicability to City Capital Improvement Projects

ENN is required for certain types of *city capital improvement* projects requiring review by the *governing body* as follows:

(i) facility plans for municipal facilities or services, including wastewater, solid waste, potable water and airport facilities;

(ii) new projects or projects to expand or extend service to new service areas included in the *capital improvement plan* or *general plan* ;

(iii) any new road construction or reconstruction of an existing road that materially expands capacity; and

(iv) projects funded out of capital impact fee funds.

(v) any new park or reconstruction or expansion of an existing park that exceeds one acre in size or one hundred and fifty thousand dollars ($150,000) in cost; construction of a new building or structure at a park or placement of new lighting at a park that exceeds one hundred and fifty thousand dollars ($150,000) in cost.

The following types of *capital improvement* projects do not require ENN:

(i) *replacement* , repair or maintenance of underground facilities where such activity does not represent a material expansion of existing facilities;

(ii) road maintenance, repair, surfacing or resurfacing, striping, curb and gutter or sidewalk repair or maintenance, *sign* maintenance, signal repair, shoulder work, bridge or culvert maintenance work; and

(iii) special assessment districts covered by *state* law or *city* ordinance.

Summary Notices to Meet ENN Guidelines (not all of the agencies may be needed for every project):

20 days in advance:
Project Consultants submit to City Project Administrator Meeting Notice Letter for review and Approval.

15 days in advance:
City Project Administrator
Email: to Santa Fe City Council members and the mayor, Santa Fe MPO staff, City of Santa Fe Parks and Recreation Department, BPAC members, City of Santa Fe Land Use Department, interested individuals, neighboring condominium / apartment associations and neighborhood associations

City PrimeGov: Post notice of ENN meeting on PrimeGov

Social Media: City's Facebook – Coordinate with Community Engagement Department's Communications Manager (505) 469-0946

Project Consultants

Mail: Meeting notice (first class mail) to property owners and physical addresses within 300' of project boundary and neighborhood associations within 300' of project boundary

Posters: At least (1) (preferably 2, but subject to availability) 4'x5' City of Santa Fe Notification Board

Newspaper: Display advertisement in a local daily newspaper of general circulation stating the date, time and place of the public hearing

City Project Administrator

Contacts:

OPTIONAL: One week in advance:
Email: to Santa Fe City Council members and mayor, Santa Fe MPO staff, City of Santa Fe Parks and Recreation Department, BTAC members, City of Santa Fe Land Use Department, interested individuals, neighboring condominium or apartment associations and neighborhood associations

OPTIONAL: One day in advance:
Email: to Santa Fe City Council members and mayor, Santa Fe MPO staff, City of Santa Fe Parks and Recreation Department, BTAC members, City of Santa Fe land Use Department, interested individuals, neighboring condominium or apartment associations and neighborhood associations

Additional References

Section 14-3.1(F) of the Santa Fe City Code for a complete representation of all regulations pertaining to Early Neighborhood Notification

City of Santa Fe

Summary of Contract, Agreement, Amendment & Lease

All applicable fields to be completed by department (complete 1.b only if you are processing an amendment):

1.a Munis Contract: TBD Procurement # (RFP/ITB# If any):

Contractor: Wilson & Company

Procurement Method: *Small Purchase* ☐ *RFP* ☑ *ITB* ☐ *Sole Source* ☐ *GSA* ☐ *Cooperative* ☐ Exempt ☐

Description/Title: PSA for On-Call for General Engineering Services & Construction Management Services in the total amount of $5,409,375 (inclusive of NMGRT)

Contract: ○ Agreement: ◉ Lease/Rent: ○ Amendment: ○

Term Start Date: TBD Term End Date: 4 Years Total Contract Amount: $5,409,375.00

☒ Approved by Council *(If over the City Manager's approval threshold, you must go through GB)* TBD

Contract / Lease:

1.b Amendment #: _____ to the Original Contract/Lease # _____

Increase/(Decrease) Amount $: _____

Extend Expiration Date to: _____

☐ Approved by Council *(If the original went through GB, all amendments must go through GB regardless of the amendment reason)* Date: _____

Amendment is for:

2. HISTORY of Contract, Amendments & Lease / Rent - Please Elaborate (option: attach spreadsheet if multiple amendments)

3. Procurement History: RFP #24001

Jorin Lovato Montaño — Jul 11, 2024

Purchasing Officer Review: Date:

Comment & Exceptions: Request for Proposal s issued and awa rded to mul tipl evendors

4. Funding Source: Various **Org / Object:** Various

Andy Hopkins — Jul 9, 2024

Budget Officer Approval: Date:

Comment & Exceptions:

5. Grant History (if applicable):

Grants Administrator Approval: **Date**

Staff Contact who Completed This Form: Amanda Archul eta Phone #: 505-955-6631

To be recorded by City Clerk: Email: ajarchul eta@santafenm.gov

Clerk #

Date of Execution:

ITT Representative (attesting that all information is reviewed) Title Date

CITY OF SANTA FE PROCUREMENT CHECKLIST

Contractor Name: Wilson & Co., Inc. Engineers and Architects

Procurement Title: Professional Services Agreement

Procurement Method: State Price Agreement ☐ Cooperative ☐ Sole Source ☐ Other ☑

Exempt ☐ Request For Proposal (RFP) ☐ Invitation To Bid (ITB) ☐ Contract under 60K ☑ Contract over 60K ☐

Department Requesting Public Works Staff Name Romella Glorioso-Moss

Procurement Requirements:

A procurement file shall be maintained for all contracts, regardless of the method of procurement. The procurement file shall contain the basis on which the award is made, all submitted bids, all evaluation materials, score sheets, quotations and all other documentation related to or prepared in conjunction with evaluation, negotiation, and the award process. The procurement shall contain a written determination from the Requesting Department, signed by the purchasing officer, setting forth the reasoning for the contract award decision before submitting to the Committees.

REQUIRED DOCUMENTS FOR APPROVAL BY PURCHASING*

YES	N/A	
☑	☐	Approved Procurement Checklist (by Purchasing)
☑	☐	Memo addressed to City Manager (under 60K) Committees/City Council (over 60K)
☐	☑	State Price Agreement
☐	☑	RFP
☑	☐	Evaluation Committee Report
☐	☑	ITB
☐	☑	Bib Tab
☐	☑	Quotes (3 valid current quotes)
☐	☑	Cooperative Agreement
☐	☑	Sole Source Request and Determination Form
☐	☑	Contractors Exempt Letter
☐	☑	Purchasing Officers approval for exempt procurement
☐	☑	BAR
☐	☑	FIR
☐	☑	Executed Contract, Agreement or Amendment
☑	☐	Current Business Registration and CRS numbers on contract or agreement
☑	☐	Summary of Contracts and Agreements form
☑	☐	Certificate of Insurance
☑	☐	All documentation presented to Committees
☐	☐	Other:

Romella Glorioso-Moss	Capital Projects Manager	07/05/2024
Department Rep Printed Name (attesting that all information included)	Title	Date
JoAnn Lovato Montaño	Procurement Manager	Jul 11, 2024
Purchasing Officer (attesting that all information is reviewed)	Title	Date

Include all other substantive documents and records of communication that pertain to the procurement and contract.

City of Santa Fe

Treasury Department
200 Lincoln Ave.
Santa Fe, New Mexico 87504-0909
505-955-6551

BUSIN

Business Name: WILSON & COMPANY INC
ENGINEERS & ARCHITECTS
DBA: WILSON & COMPANY INC
ENGINEERS

Business Location: P.O. BOX 94000
ALBUQUERQUE, NM 87109

Owner: JAMES BRADY

License Number: 222663

Issued Date: January 22, 2024

Expiration Date: January 22, 2025

License Type: Business Lice

Classification: Out of Jurisdic

Fees Paid: $10.00

WILSON & COMPANY INC ENGINEERS & ARCHITEC
P.O. BOX 94000
ALBUQUERQUE, NM 87199

THIS IS NOT A CONSTRUCTION P
APPROPRIATE PERMITS MUST B
OF SANTA FE BUILDING PERMIT
COMMENCEMENT OF ANY CONS
INSTALLATION OF ANY EXTERIO

THIS REGISTRATION/LICENSE IS
OTHER BUSINESSES OR PREMISE

TO BE POSTED IN A CONSPICUOUS PLACE

CERTIFICATE OF LIABILITY INSURANCE

DATE (MM/DD/YYYY) 6/1/2025 5/28/2024

THIS CERTIFICATE IS ISSUED AS A MATTER OF INFORMATION ONLY AND CONFERS NO RIGHTS UPON THE CERTIFICATE HOLDER. THIS CERTIFICATE DOES NOT AFFIRMATIVELY OR NEGATIVELY AMEND, EXTEND OR ALTER THE COVERAGE AFFORDED BY THE POLICIES BELOW. THIS CERTIFICATE OF INSURANCE DOES NOT CONSTITUTE A CONTRACT BETWEEN THE ISSUING INSURER(S), AUTHORIZED REPRESENTATIVE OR PRODUCER, AND THE CERTIFICATE HOLDER.

IMPORTANT: If the certificate holder is an ADDITIONAL INSURED, the policy(ies) must have ADDITIONAL INSURED provisions or be endorsed. If SUBROGATION IS WAIVED, subject to the terms and conditions of the policy, certain policies may require an endorsement. A statement on this certificate does not confer rights to the certificate holder in lieu of such endorsement(s).

PRODUCER Lockton Companies 444 W. 47th Street, Suite 900 Kansas City MO 64112-1906 (816) 960-9000 kcasu@lockton.com	**CONTACT NAME:** **PHONE (A/C, No, Ext):** **FAX (A/C, No):** **E-MAIL ADDRESS:**
INSURED 4011 WILSON & CO., INC. 4401 MASTHEAD STREET NE SUITE 150 ALBUQUERQUE NM 87109	**INSURER(S) AFFORDING COVERAGE** — **NAIC #** **INSURER A :** Valley Forge Insurance Company — 20508 **INSURER B :** The Continental Insurance Company — 35289 **INSURER C :** American Casualty Company of Reading, PA — 20427 **INSURER D :** Transportation Insurance Company — 20494 **INSURER E :** **INSURER F :**

COVERAGES **CERTIFICATE NUMBER:** 19825998 **REVISION NUMBER:** XXXXXXX

THIS IS TO CERTIFY THAT THE POLICIES OF INSURANCE LISTED BELOW HAVE BEEN ISSUED TO THE INSURED NAMED ABOVE FOR THE POLICY PERIOD INDICATED. NOTWITHSTANDING ANY REQUIREMENT, TERM OR CONDITION OF ANY CONTRACT OR OTHER DOCUMENT WITH RESPECT TO WHICH THIS CERTIFICATE MAY BE ISSUED OR MAY PERTAIN, THE INSURANCE AFFORDED BY THE POLICIES DESCRIBED HEREIN IS SUBJECT TO ALL THE TERMS, EXCLUSIONS AND CONDITIONS OF SUCH POLICIES. LIMITS SHOWN MAY HAVE BEEN REDUCED BY PAID CLAIMS.

INSR LTR	TYPE OF INSURANCE	ADDL INSD	SUBR WVD	POLICY NUMBER	POLICY EFF (MM/DD/YYYY)	POLICY EXP (MM/DD/YYYY)	LIMITS	
A	[X] COMMERCIAL GENERAL LIABILITY [ ] CLAIMS-MADE [X] OCCUR GEN'L AGGREGATE LIMIT APPLIES PER: [ ] POLICY [X] PRO-JECT [X] LOC [ ] OTHER:	Y	Y	7091833236	6/1/2024	6/1/2025	EACH OCCURRENCE DAMAGE TO RENTED PREMISES (Ea occurrence) MED EXP (Any one person) PERSONAL & ADV INJURY GENERAL AGGREGATE PRODUCTS - COMP/OP AGG 	$ 1,000,000 $ 1,000,000 $ 10,000 $ 1,000,000 $ 2,000,000 $ 2,000,000 $
B	AUTOMOBILE LIABILITY [X] ANY AUTO [ ] OWNED AUTOS ONLY [ ] SCHEDULED AUTOS [X] HIRED AUTOS ONLY [X] NON-OWNED AUTOS ONLY	Y	Y	7091833222	6/1/2024	6/1/2025	COMBINED SINGLE LIMIT (Ea accident) BODILY INJURY (Per person) BODILY INJURY (Per accident) PROPERTY DAMAGE (Per accident) 	$ 1,000,000 $ XXXXXXX $ XXXXXXX $ XXXXXXX $ XXXXXXX
	[ ] UMBRELLA LIAB [ ] OCCUR [ ] EXCESS LIAB [ ] CLAIMS-MADE [ ] DED [ ] RETENTION $			NOT APPLICABLE			EACH OCCURRENCE AGGREGATE 	$ XXXXXXX $ XXXXXXX $ XXXXXXX
C D	WORKERS COMPENSATION AND EMPLOYERS' LIABILITY ANY PROPRIETOR/PARTNER/EXECUTIVE OFFICER/MEMBER EXCLUDED? Y/N [N] N/A (Mandatory in NH) If yes, describe under DESCRIPTION OF OPERATIONS below	N/A	N	7091833186 7091833205	6/1/2024 6/1/2024	6/1/2025 6/1/2025	[X] PER STATUTE [ ] OTH-ER E.L. EACH ACCIDENT E.L. DISEASE - EA EMPLOYEE E.L. DISEASE - POLICY LIMIT	 $ 1,000,000 $ 1,000,000 $ 1,000,000

DESCRIPTION OF OPERATIONS / LOCATIONS / VEHICLES (ACORD 101, Additional Remarks Schedule, may be attached if more space is required)

RE: PROJECT NUMBER: 2323-01-C1117 PROJECT NAME: ALL DESIGN PROFESSIONAL SERVICES, CATEGORY 1 – LOT 1, ARCHITECTURAL DESIGN AND CONSULTING SERVICES. CITY OF SANTA FE, THEIR OFFICIALS, OFFICERS, AND EMPLOYEES ARE ADDITIONAL INSUREDS AS RESPECTS GENERAL LIABILITY AND AUTO LIABILITY, AND THESE COVERAGES ARE PRIMARY AND NON-CONTRIBUTORY, IF REQUIRED BY WRITTEN CONTRACT. WAIVER OF SUBROGATION APPLIES TO GENERAL LIABILITY AND AUTO LIABILITY WHERE ALLOWED BY STATE LAW AND IF REQUIRED BY WRITTEN CONTRACT.

CERTIFICATE HOLDER

19825998
CITY OF SANTA FE, NEW MEXICO
ATTN: ROMELLA GLORIOSO-MOSS, PHD, CPM, AICP
CAPITAL PROJECTS MANAGER & BPAC STAFF LIAISON
PUBLIC WORKS – COMPLETE STREETS
737 AGUA FRIA ST
SANTA FE, NM 87501

CANCELLATION

SHOULD ANY OF THE ABOVE DESCRIBED POLICIES BE CANCELLED BEFORE THE EXPIRATION DATE THEREOF, NOTICE WILL BE DELIVERED IN ACCORDANCE WITH THE POLICY PROVISIONS.

AUTHORIZED REPRESENTATIVE

© 1988-2015 ACORD CORPORATION. All rights reserved.

CERTIFICATE OF LIABILITY INSURANCE

DATE (MM/DD/YYYY) 5/28/2024

6/1/2025

THIS CERTIFICATE IS ISSUED AS A MATTER OF INFORMATION ONLY AND CONFERS NO RIGHTS UPON THE CERTIFICATE HOLDER. THIS CERTIFICATE DOES NOT AFFIRMATIVELY OR NEGATIVELY AMEND, EXTEND OR ALTER THE COVERAGE AFFORDED BY THE POLICIES BELOW. THIS CERTIFICATE OF INSURANCE DOES NOT CONSTITUTE A CONTRACT BETWEEN THE ISSUING INSURER(S), AUTHORIZED REPRESENTATIVE OR PRODUCER, AND THE CERTIFICATE HOLDER.

IMPORTANT: If the certificate holder is an ADDITIONAL INSURED, the policy(ies) must have ADDITIONAL INSURED provisions or be endorsed. If SUBROGATION IS WAIVED, subject to the terms and conditions of the policy, certain policies may require an endorsement. A statement on this certificate does not confer rights to the certificate holder in lieu of such endorsement(s).

PRODUCER Lockton Companies 444 W. 47th Street, Suite 900 Kansas City MO 64112-1906 (816) 960-9000 kcasu@lockton.com	**CONTACT NAME:** **PHONE (A/C, No, Ext):** **FAX (A/C, No):** **E-MAIL ADDRESS:**
	INSURER(S) AFFORDING COVERAGE — **NAIC #** **INSURER A :** Berkshire Hathaway Specialty Insurance Company — 22276
INSURED 1048828 WILSON & CO., INC. 4401 MASTHEAD STREET NE SUITE 150 ALBUQUERQUE NM 87109	**INSURER B :** **INSURER C :** **INSURER D :** **INSURER E :** **INSURER F :**

COVERAGES **CERTIFICATE NUMBER:** 19826003 **REVISION NUMBER:** XXXXXXX

THIS IS TO CERTIFY THAT THE POLICIES OF INSURANCE LISTED BELOW HAVE BEEN ISSUED TO THE INSURED NAMED ABOVE FOR THE POLICY PERIOD INDICATED. NOTWITHSTANDING ANY REQUIREMENT, TERM OR CONDITION OF ANY CONTRACT OR OTHER DOCUMENT WITH RESPECT TO WHICH THIS CERTIFICATE MAY BE ISSUED OR MAY PERTAIN, THE INSURANCE AFFORDED BY THE POLICIES DESCRIBED HEREIN IS SUBJECT TO ALL THE TERMS, EXCLUSIONS AND CONDITIONS OF SUCH POLICIES. LIMITS SHOWN MAY HAVE BEEN REDUCED BY PAID CLAIMS.

INSR LTR	TYPE OF INSURANCE	ADDL INSD	SUBR WVD	POLICY NUMBER	POLICY EFF (MM/DD/YYYY)	POLICY EXP (MM/DD/YYYY)	LIMITS	
	COMMERCIAL GENERAL LIABILITY ☐ CLAIMS-MADE ☐ OCCUR GEN'L AGGREGATE LIMIT APPLIES PER: ☐ POLICY ☐ PRO-JECT ☐ LOC ☐ OTHER:			NOT APPLICABLE			EACH OCCURRENCE	$ XXXXXXX
							DAMAGE TO RENTED PREMISES (Ea occurrence)	$ XXXXXXX
							MED EXP (Any one person)	$ XXXXXXX
							PERSONAL & ADV INJURY	$ XXXXXXX
							GENERAL AGGREGATE	$ XXXXXXX
							PRODUCTS - COMP/OP AGG	$ XXXXXXX
								$
	AUTOMOBILE LIABILITY ☐ ANY AUTO ☐ OWNED AUTOS ONLY ☐ SCHEDULED AUTOS ☐ HIRED AUTOS ONLY ☐ NON-OWNED AUTOS ONLY			NOT APPLICABLE			COMBINED SINGLE LIMIT (Ea accident)	$ XXXXXXX
							BODILY INJURY (Per person)	$ XXXXXXX
							BODILY INJURY (Per accident)	$ XXXXXXX
							PROPERTY DAMAGE (Per accident)	$ XXXXXXX
								$ XXXXXXX
	☐ **UMBRELLA LIAB** ☐ OCCUR ☐ **EXCESS LIAB** ☐ CLAIMS-MADE ☐ DED ☐ RETENTION $			NOT APPLICABLE			EACH OCCURRENCE	$ XXXXXXX
							AGGREGATE	$ XXXXXXX
								$ XXXXXXX
	WORKERS COMPENSATION AND EMPLOYERS' LIABILITY Y / N ANY PROPRIETOR/PARTNER/EXECUTIVE OFFICER/MEMBER EXCLUDED? ☐ N / A **(Mandatory in NH)** If yes, describe under DESCRIPTION OF OPERATIONS below			NOT APPLICABLE			☐ PER STATUTE ☐ OTH-ER	
							E.L. EACH ACCIDENT	$ XXXXXXX
							E.L. DISEASE - EA EMPLOYEE	$ XXXXXXX
							E.L. DISEASE - POLICY LIMIT	$ XXXXXXX
A	PROFESSIONAL LIABILITY	N	N	47-EPP-305301-07	6/1/2024	6/1/2025	$1,000,000 EACH CLAIM & ANNUAL AGGREGATE FOR ALL PROJECTS.	

DESCRIPTION OF OPERATIONS / LOCATIONS / VEHICLES (ACORD 101, Additional Remarks Schedule, may be attached if more space is required)

RE: PROJECT NUMBER: 2323-01-C1117 PROJECT NAME: ALL DESIGN PROFESSIONAL SERVICES, CATEGORY 1 – LOT 1, ARCHITECTURAL DESIGN AND CONSULTING SERVICES.

CERTIFICATE HOLDER

19826003
CITY OF SANTA FE, NEW MEXICO
ATTN: ROMELLA GLORIOSO-MOSS, PHD, CPM, AICP
CAPITAL PROJECTS MANAGER & BPAC STAFF LIAISON
PUBLIC WORKS – COMPLETE STREETS
737 AGUA FRIA ST
SANTA FE, NM 87501

CANCELLATION

SHOULD ANY OF THE ABOVE DESCRIBED POLICIES BE CANCELLED BEFORE THE EXPIRATION DATE THEREOF, NOTICE WILL BE DELIVERED IN ACCORDANCE WITH THE POLICY PROVISIONS.

AUTHORIZED REPRESENTATIVE

Joseph M Agnello

© 1988-2015 ACORD CORPORATION. All rights reserved.

City of Santa Fe, New Mexico
Memorandum

DATE: April 24, 2024

TO: Travis Dutton-Leyda, CPO

VIA: JoAnn Lovato-Montano

FROM: Romella Glorioso-Moss, PhD, CPM *RGM*
Procurement Manager

RE: RFP#24001 Evaluation Committee Report

In accordance with the Request for Proposals for On-Call General Engineering Services for Roadway, Trail, Bridge, Drainage, Facility, Utility and Traffic Design (RFP# 24001) issued on February 8, 2024, the City received eleven (11) proposals from the following Offerors:

1. AECOM Technical Services, Inc. (AECOM)
2. Bohannan-Huston, Inc. (BHI)
3. Earth and Steel Design, LLC. (Earth & Steel)
4. Huitt-Zollars, Inc. (Huitt-Zollars)
5. Lee Engineering, LLC. (Lee Eng.)
6. Miller Engineers, Inc., d/b/a/ Souder, Miller & Associates (ME/SMA)
7. Molzen Corbin
8. Santa Fe Engineering Consultants, LLC. (SFEC)
9. WHPacific, an NV5 Company (WHPacific)
10. Wilson & Company, Inc. (Wilson)
11. WSP USA, Inc. (WSP)

The Evaluation Committee members are as follows:

- Dalmolin, Mike PE, Traffic Operations Engineer, Public Works – Complete Streets
- Isaacson, Zoë, River and Watershed Manager, Public Works – Parks and Open Space
- Jurgens, Taylor PE, Engineer, Public Utilities – Water
- Wolfenbarger, Jeanne PE, Traffic Engineer, Public Works – Complete Streets.

This Evaluation Committee Report summarizes all criteria used in scoring the response.

- March 11, 2024: Evaluation Committee met to review the Evaluation Committee duties and RFP process, and to receive the Offerors technical proposals.

- March 11-17, 2024: Each committee member reviewed and scored all the proposals individually.

- March 18, 2024: Procurement Manager and committee members held an in-person meeting to review and discuss individual score sheets and came to a consensus.

- April 4, 2024: Procurement Manager emailed SFEC for clarification on Appendix F and it was determined that Appendix F was not included in their proposals as required by the RFP.

- April 12, 2024: Evaluation committee report submitted to Central Purchasing for review.

SUMMARY:

Although Section IV.C. Business Specifications appeared before Section IV.B Technical Specification in RFP#24001, the Committee reviewed Offerors' compliance to Section IV.C. Business Specifications first to identify proposals who are disqualified and should not move forward for further evaluation.

Section IV. C. Business Specifications

C.1 Letter of Transmittal Form

Specifications:
The Offeror's proposal **must** be accompanied by the Letter of Transmittal Form located in APPENDIX A. The form should be completed and must be signed by the person authorized to obligate the company.

Evaluation Factor:
Pass/Fail only. No points assigned.

Scores:

AECOM	BHI	Earth & Steel	Huitt-Zollars	Lee Eng'g.	ME/ SMA	Molzen-Corbin	SFEC	WH Pacific	Wilson	WSP
Pass	Pass	Pass	Pass	Pass	Pass	Pass	Pass	Pass	Pass	Pass

Comments:
All Offerors submitted a Letter of Transmittal with their proposals. All Offerors passed this specification.

C.2 Campaign Contribution Disclosure Form

Specifications:
The Offeror must complete an unaltered Campaign Contribution Disclosure Form and submit a signed copy with the Offeror's proposal. This must be accomplished whether or not an applicable contribution has been made (APPENDIX B). **Failure to complete and return the signed, unaltered form will result in Offeror's disqualification.**

Evaluation Factor:
Pass/Fail only. No points assigned.

Scores:

AECOM	BHI	Earth & Steel	Huitt-Zollars	Lee Eng'g.	ME/ SMA	Molzen-Corbin	SFEC	WH Pacific	Wilson	WSP
Pass	Pass	Pass	Pass	Pass	Pass	Pass	Pass	Pass	Pass	Pass

Comments:
All Offerors submitted a signed Campaign Contribution Disclosure Form with their proposals. All Offerors passed this specification.

C.3 Non-Collusion Affidavit Form

Specifications:
The Offeror **must** complete an unaltered Non-Collusion Affidavit Form and submit a signed copy with the Offeror's proposal (APPENDIX C). **Failure to complete and return the signed, unaltered form will result in Offeror's disqualification.**

Evaluation Factor:
Pass/Fail only. No points assigned.

Scores:

AECOM	BHI	Earth & Steel	Huitt-Zollars	Lee Eng'g.	ME/ SMA	Molzen-Corbin	SFEC	WH Pacific	Wilson	WSP
Pass	Pass	Pass	Pass	Pass	Pass	Pass	Pass	Pass	Pass	Pass

Comments:
All Offerors submitted a signed Non-Collusion Affidavit Form with their proposals. All Offerors passed this specification.

C.4 Conflict of Interest Statement for Consulting Firms

Specifications:
The Offeror **must** complete an unaltered Conflict of Interest Statement for Consulting Firms and submit a signed copy with the Offeror's proposal (APPENDIX D). **Failure to complete and return the signed, unaltered form will result in Offeror's disqualification.**

Evaluation Factor:
Pass/Fail only. No points assigned.

Scores:

AECOM	BHI	Earth & Steel	Huitt-Zollars	Lee Eng'g.	ME/ SMA	Molzen-Corbin	SFEC	WH Pacific	Wilson	WSP
Pass	Pass	Pass	Pass	Pass	Pass	Pass	Pass	Pass	Pass	Pass

Comments:
All Offerors submitted a signed Conflict of Interest Statement with their proposals. All Offerors passed this specification.

C.5 Confidentiality and Non-Disclosure Agreement

Specifications:
The Offeror **must** complete an unaltered Confidentiality and Non-Disclosure Agreement and submit a signed copy with the Offeror's proposal (APPENDIX E). **Failure to complete and return the signed, unaltered form will result in Offeror's disqualification.**

Evaluation Factor:
Pass/Fail only. No points assigned.

Scores:

AECOM	BHI	Earth & Steel	Huitt-Zollars	Lee Eng'g.	ME/ SMA	Molzen-Corbin	SFEC	WH Pacific	Wilson	WSP
Pass	Pass	Pass	Pass	Pass	Pass	Pass	Pass	Pass	Pass	Pass

Comments:
All Offerors submitted a signed Confidentiality and Non-Disclosure Agreement with their proposals. All Offerors passed this specification.

C.6 Sub-Consultants Offerors List

Specifications:
The Offeror **must** complete an unaltered Sub-Consultants Offerors List and submit a signed copy with the Offeror's proposal (APPENDIX F). **Failure to complete and return the signed, unaltered form will result in Offeror's disqualification.**

Evaluation Factor:
Pass/Fail only. No points assigned.

Scores:

AECOM	BHI	Earth & Steel	Huitt-Zollars	Lee Eng'g.	ME/ SMA	Molzen-Corbin	SFEC	WH Pacific	Wilson	WSP
Pass	Pass	Pass	Pass	Pass	Pass	Pass	Fail	Pass	Pass	Pass

Comments:
All Offerors except the SFEC (Santa Fe Engineering Consultants, LLC) submitted a signed Sub-Consultants Offerors List with their proposals. SFEC was disqualified due to this fact.

Section IV.B Technical Specifications

Section IV.B.1 General Information (maximum 5 points)

Specifications:
Offeror **must** identify its principal member(s) or officer(s) who will be responsible for the administration of the contract; provide the name(s) and registration number(s) of the New Mexico Registered Professional Engineer who will be directly responsible and in charge of the work; and identify the name, address, and phone number of the office(s) where the work will be performed for the prime Offeror and all sub-consultants.

Evaluation Factor:
Points will be awarded based on the completeness of the Offeror's responses.

Scores:

AECOM	BHI	Earth & Steel	Huitt-Zollars	Lee Eng'g.	ME/ SMA	Molzen-Corbin	SFEC	WH Pacific	Wilson	WSP
5	4.8	4.3	5	5	4.8	4.8	Disqualified	4.8	3.8	5

Comments:

1) **AECOM** (5 points) provided in detail, their principal officers and other engineers on staff to help complete a range of engineering tasks identified in the Scope of Work (SOW). AECOM's office locations and its subconsultants were also provided. The proposal is particularly strong listing the experience of principal officers with previous work with the City.

2) **BHI** (4.8 points) provided requested information about principal officers and work locations. However, it was weak in reference to the consideration of subconsultants that may be required to supplement in-house staff.

3) **Earth and Steel** (4.3 points) missed a couple of specifications resulting to a 0.5 point deduction. The proposal identified the principal officer but not the requested details, such as the location where the work will be performed or information on the subconsultants.

4) **Huitt-Zollars** (5 points) provided full details on principals who will be responsible for the administration of the contract. The Offeror provided the names and registration numbers of the New Mexico Registered Professional Engineer who will be directly responsible and in charge of the work. The Offeror also identified the names, addresses, and phone numbers of the sub-consultants.

5) **Lee Eng'g.** (5 points) provided all the information requested such names and registration numbers of the principal officers; name, address, and phone number of the principal office including all sub-consultants. Their response was complete and identified all required information in this specification.

6) **ME/SMA** (4.8 points) provided general information on the principal officers but not on subconsultants.

7) **Molzen-Corbin** (4.8 points) provided sufficient information but lacked detail.

8) **WHPacific** (4.8 points) provided information on its principals and subcontractors but not much detail was included.

9) **Wilson** (3.8 points) provided the requested information on its principal officers but not the requested details, such as the location where the work will occur or requested information on the subconsultants. The Offeror did not also provide details (name, address and telephone number) of offices where the work will be performed.

10) **WSP** (5 points) proposal provided all the details of general information requested for principal officers and their subconsultants.

Section IV.B.2 Organizational References (maximum 15 points)

Specifications:
Offeror **must** provide a list of three (3) references from similar projects for city, state or federal government clients within the last four (4) years (2020-2023).

Offeror shall include the following Business Reference information as part of its proposals:

a) Client name;
b) Project description;
c) Project dates (starting and ending);
d) Technical environment (i.e. Professional design or construction management services for roadways, trails, bridges, drainage, facility, utility, traffic, underpasses/overpasses, etc.)
e) Staff assigned to reference engagement that will be designated for work per this RFP; and
f) Client project manager name, telephone number, fax number and email address.

Offeror is required to submit APPENDIX H, Organizational Reference Questionnaire ("Questionnaire"), to the business references it lists. **The business references must submit the Questionnaire directly to the designee identified in APPENDIX H. The business references must not return the completed Questionnaire to the Offeror.** It is the Offeror's responsibility to ensure the completed forms are submitted on or before the date indicated in Section II. A, Sequence of Events, for inclusion in the evaluation process.

Organizational References that are not received or are not complete, may adversely affect the Offeror's score in the evaluation process. Offerors are encouraged to specifically request that their Organizational References provide detailed comments.

Evaluation Factor:
Points will be awarded based upon an evaluation of the responses to a series of questions on the Organizational Reference Questionnaire (APPENDIX H). Offeror will be evaluated on references that show positive service history, successful execution of services and evidence of satisfaction by each reference. References indicating significantly similar services/scopes of work and comments provided by a submitted reference will add weight and value to a recommendation during the evaluation process.

Points will be awarded for each individual response up to 1/3 of the total points for this category. Lack of a response will receive zero (0) points.

The Evaluation Committee may contact any or all business references for validation of information submitted. If this step is taken, the Procurement Manager and the Evaluation Committee must all be together on a conference call with the submitted reference so that the Procurement Manager and all members of the Evaluation Committee receive the same information. Additionally, the City reserves the right to consider any and all information available to it (outside of the Organizational Reference information required herein), in its evaluation of Offeror responsibility per Section II.C.18.

Scores:

AECOM	BHI	Earth & Steel	Huitt-Zollars	Lee Eng'g.	ME/ SMA	Molzen-Corbin	SFEC	WH Pacific	Wilson	WSP
13.6	13.6	0	9	9.8	13.5	14.5	Disqualified	14.5	14	13.8

Comments:

1) **AECOM** (13.6 points) received three references. The reference for the NM 456 emergency bridge project is exemplary. The NMDOT had a pre-manufactured bridge, and this Offeror was able to retrofit these existing bridge components to fit the project's specifications within 6 months. Such an approach saved a substantial amount of money and showed their adaptability.
   The other two references show the depth of this Offeror, from roadway improvements on NM 68 to inspection of bridge elements. The proposal outlined how this Offeror assumed control of the NM 68 project to correct deficiencies and shows their technical proficiency. However, the reference mentioned a few components were missed on the plan set. Both references did not provide rich detail to assess the firm's performance.

2) **BHI** (13.6 points) received three references. All of them indicated high satisfaction with this Offeror and several mentioned having an extensive service history with them. The range of technical expertise displayed by these three projects referenced are quite varied and include drainage, roadway, and bridge. In particular, the Sunport Boulevard Extension project really showed the Offeror's technical proficiency in all of the services requested. Scores were reduced due to the references providing very little detail and, in some cases, did not even provide any comment to justify the score provided. RFP requested firms encourage their references to provide detailed comments and thus points were reduced.

3) **Earth & Steel** (0 points) identified three references in their proposal (pp. 11-13). However, none of these references submitted the reference questionnaire to the Purchasing Division or to the Procurement Manager. Zero points were awarded as a result.

4) **Huitt-Zollars** (9 points) - The two references received for this Offeror provided almost no comment to justify high scores. The proposal lists a range of professional services, but the references do not provide any detail to demonstrate technical proficiency.

5) **Lee Eng'g.** (9.8 points) – Although three references were received for this Offeror, one did not respond to any of the questions at all. However, the two other references provided details to demonstrate their technical expertise in a range of roadway and traffic engineering services. Both references highly acclaim their services and rank them as the preferred on-call contract for traffic engineering services for the NMDOT and the City of Rio Rancho. Although this Offeror does not offer the full range of services identified in the SOW, such as bridges and drainage design services, this firm is ranked highly for meeting very specific and technical design services within traffic.

6) **ME/SMA** (13.5 points) - The three references for this Offeror were very complimentary and some continue to employ them on other projects. However, the language in two of the references were nearly word for word the same with some minor changes. For example, on Question 9 about which services were you least satisfied, the language is the exact same about project schedule.

7) **Molzen-Corbin** (14.5 points) - Two of the three references from the NMDOT and City of Albuquerque were effusive with praise and documented the long-standing relationship with this firm on multiple projects. The range of engineering services are also excellent, ranging from airport design, bridges, drainage, utility, etc. In particular that was impressive was the design details highlighting thoughtful design, including gravity flow when possible on the Santa Fe County project and sustainability rating on the I-25 interchange.

8) **WHPacific** (14.5 points) - Two of the three reference letters provided detailed comments and gave concrete examples of what separated this firm, such as the lack of change orders during construction owing to their "knowledge and expertise" during the design process. The other reference highlighted their knowledge of relevant manuals.

9) **Wilson** (14 points) - All the references highlighted how this Offeror has extensive histories and completed a lot of projects for several of them, including Los Alamos County, AMAFCA, and Rio Rancho. Other positives cited included how Wilson is able to complete a lot of the services in-house. However, the references also highlighted some weaknesses in technical writing and QA/QC processes.

10) **WSP** (13.8 points) received three references. Their references noted that their agency has worked with this Offeror on several projects and highlighted how they are one of the most accommodating firms and can handle large projects. The reference from the City of Albuquerque particularly how well executed the firm does with their complete street maintenance program, citing their ability to thoroughly research each corridor.

The Evaluation Committee did not contact any of the business references to validate any information submitted.

Section IV.B.3. Mandatory Specifications

IV.B.3.a. Specialized Design and Technical Competence (maximum 25 points)

Specifications:

Offeror **must** describe two (2) engineering design projects that highlight their specialized problem-solving techniques or approaches, innovative practices/ideas, and advantages its team brings or offers to the City.

Evaluation Factor:
Points will be awarded based on Offeror's innovativeness, creativity, and effectiveness in designing past projects.

Scores:

AECOM	BHI	Earth & Steel	Huitt-Zollars	Lee Eng'g.	ME/ SMA	Molzen-Corbin	SFEC	WH Pacific	Wilson	WSP
24.4	22	20	18.3	21.3	20.3	24	Disqualified	21.5	23.3	22.5

Comments:

1) **AECOM** (24.4 points) showcased two projects showed very clearly the attention to detail and the innovative practices they can bring to solve problems. One highlight is the unique approach to lighting the underpass, using a combination of design alternations to bring as much natural light as possible while using light shield sculptures to integrate art while reducing vandalism. The integration of art into design can really help a project succeed within the City. The ability to mobilize such an eclectic staff to address a broad array brings a lot of value to the City.

2) **BHI** (22 points) demonstrated their ability to factor in their clients' input in decision-making. However, project examples given were simple and did not show their ability to be innovative, and creative.

3) **Earth and Steel** (20 points) described two engineering projects from work the principal members did as part of another firm. Therefore, it was unclear where division of responsibilities lies. Nevertheless, their project description highlights how both of the principal members contributed specialized problem-solving techniques.

4) **Huitt-Zollars** (18.3 points) described innovative practices and ideas, but they were not connected to the two projects highlighted.

5) **Lee Engineering** (21.3 points) listed two projects and had a supplemental section spotlighting unique and creative approaches to traffic engineering. Some of these unique and creative approaches include alternative intersection design, employment of big data to yield more nuanced understanding of traffic along I-40, and employment of "rest-in-red" signal operations. These innovative solutions were not linked to the two projects described in the proposal. These creative approaches offer potential benefits to the City but the firm will be limited to specific engineering services, such as traffic and roadway.

6) **ME/SMA** (20.3 points) in highlighting two projects showed some effective problem-solving, including receiving approval on meeting ADA requirements to the maximum extent feasible and

providing a graphic simulation of roadway design. However, they are quite simple, so it did not show creativity and innovativeness that RFP requires.

7) **Molzen-Corbin** (24 points) received the highest score for this question. The two project examples given were discussed succinctly and highlighted their innovativeness, creativity and advantages their team brings or offers to the City.

8) **WH Pacific** (21.5 points) described the two project examples given very well but no discussion on innovativeness and creativity. Project examples demonstrated the Offerors' ability to coordinate with multiple entities/stakeholders and involved complex project phasing and sequencing.

9) **Wilson** (23.3 points) demonstrated well their ability to take on very complex projects and see them through construction. Descriptions of the two project examples given were innovative and cutting edge. However, a few points were deducted because there was no discussion on hardships or difficulties encountered and how they were resolved.

10) **WSP** (22.5 points) described two projects but they lack specificity which makes it difficult to assess the firm's innovativeness or creativity and hence the advantages their team brings or offers to the City.

IV.B.3.b. Capacity and Capability of the Offeror to Perform the Scope of Work (maximum 25 points)

Specifications:
Offeror **must:**

i. provide information about the business that demonstrates the ability to provide sufficient professional competence, meet time schedules, accommodate cost considerations, and project administration requirements, including information that demonstrates the Offeror's ability to perform the services required for this project;

ii. include an organizational chart indicating key project team members, including any sub-consultants, and their specific roles on the project and/or area(s) of expertise, and clearly identifying the lead engineer who will be directly responsible for the project. The percentage of time each team member will spend or commit to providing services toward the project must be included in the organizational chart; and

iii. provide brief resumes for the lead engineer and key project team members, describing why each team member was selected for this proposal, highlighting relevant project experience and knowledge of City/NMDOT/FHWA procedures. If a subcontractor is affiliated with the prime contractor as an affiliated company, firm, or business, the proposal must indicate this. The proposal must also identify the Offeror's team's list of current projects with the City.

Evaluation Factor:
Points will be awarded based on the team members' relevance and extent of their experience, expertise and knowledge in engineering design of a roadway, trail, bridge, drainage, facility, utility and traffic;

and of their formal education, certifications and licenses. In addition, points will also be based on the amount of care and attention given to assembling the team members based on their specialized professional competence and Scope of Work.

Scores:

AECOM	BHI	Earth & Steel	Huitt-Zollars	Lee Eng'g.	ME/ SMA	Molzen-Corbin	SFEC	WH Pacific	Wilson	WSP
24.8	23	18.5	22	21.8	20.3	23	Disqualified	21.5	23.3	22.5

Comments:

1) **AECOM** (24.8 points) outlined an extensive approach to demonstrate their ability to meet project schedules and accommodate cost considerations through an extensive list of tools to monitor the schedule and tasks as well as a deep well of project cost data from other projects.

   The Offeror gave an immense accounting of their technical expertise in all of the engineering services and how that would be tailored to meet the City's standards through different planning documents. In terms of the engineers leading the project, almost all had decades of experience.

   The proposal discussed in detail their cost control/estimating procedures, their Quality Management Plan/System to control QA/QC practices.
   Resumes showed their team is well-qualified.

   A small weakness is this section could have been written in a more concise way.

2) **BHI** (23 points) has extensive on-call experience. They have a long list of contracts with work relevant to RFP's SOW. They also provide specialty engineering services such as community development, planning and GIS which are important components to public engagement/participation. However, the Offeror's organizational chart did not have the percentages each member would be assigned to certain tasks and did not include the depth of the firm. Although the firm has extensive capacity in the range of engineering services, any subconsultant should have been listed even if it is not anticipated to be needed.

3) **Earth and Steel** (18.5 points) demonstrated a high-level of understanding of a project life-cycle but lacked specificity and details on how these projects are implemented. Principal members have a lot of experience in and around Santa Fe and with NMDOT. Staff resumes and organizational chart don't indicate very much depth of key project staff.

4) **Huitt-Zollars** (22 points) demonstrated strong multi-disciplinary experience with a large design staff. Graphics on schedule and cost control were helpful and reflect strong schedule and cost control measures. Both the organizational chart and resumes showed a lot of experienced staff. One weakness identified is since the firm does not have any projects with the City, they may not be familiar with City codes and other regulations and procedures.

5) **Lee Engineering** (21.8 points) showed in their organizational chart and resume sections that they have a capacity to handle most engineering services listed in the SOW. However, the organizational chart lists many engineering services with one capable staff. Some questions thus remain as to the depth of the firm to handle large projects. But this firm seems to have a strong capability in roadway design and traffic engineering services based on what was provided. The firm also has had several projects, and currently has several projects, with the City, showing their experience of City procedures. However, the proposal did not address the requested information on the firm's ability to accommodate cost considerations and keep project schedules.

6) **ME/SMA** (20.3 points) demonstrated in their organizational chart and resumes that they have the capacity to handle most engineering services listed in the SOW but the organization chart lists many engineering services with one capable staff. This leads to a question as to the capacity of the firm to handle large projects and multiple projects.

   Another weakness in the section was the parts dedicated to demonstrating the Offeror's ability to meet time schedules, accommodate cost schedules, etc. The response is too general and not enough concrete details were provided.

7) **Molzen-Corbin** (23 points) showed a lot of past experience with on-call contracts in New Mexico. It also showed multi-disciplinary experience in-house, including all areas of the SOW. The resumes show good experience in each discipline. One weakness identified was that the firm currently does not have any projects with the City and may not have extensive knowledge of City procedures due to this fact.

8) **WH Pacific** (21.5 points) demonstrated broad experience in several of the disciplines listed in the SOW. This firm has lots of experience with on-call contracts. The proposal provided concrete examples of their ability to meet cost and schedule components by providing tables of recent projects the firm has completed. The proposal detailed the range of professional competence, from traffic engineering, roadway design, to drainage. However, the same level of detail was not provided for some of the services in the RFP, such as bridges and facilities but the proposal listed resumes of some of the staff equipped to handle those kinds of tasks.

9) **Wilson** (23.3 points) stands out for its extensive knowledge of the City to the extent a special Microsoft Project file was jointly developed to track project schedules. That extensive City knowledge coupled with a broad range of engineers capable of all the engineering tasks support the firm's capabilities to the City. However, the proposal was weak in detailing and providing concrete examples to reduce construction cost and keep schedules.

10) **WSP** (22.5 points) showed the team's ability to support the City with local talent while also being able to lean on national expertise is an added benefit. The proposal's narrative also showed the Offeror has experience in several disciplines identified in SOW. The resumes reflect a team that is well-qualified and experienced in working with the City and NMDOT. A weakness in the section was the parts dedicated to demonstrating the firm's ability to meet time schedules, accommodate cost schedules, etc. The response is too general and not enough concrete details were provided.

IV.B.3.c Past Record of Performance (maximum 20 points)

Specifications:
Offeror **must** demonstrate through historical documentation that the Offeror has the ability to meet schedules and budgets, as well as user program goals, and final construction project costs. Project schedules should provide information about the progress of work as related to owner schedules and goals as well as the overall success of projects and client satisfaction. The proposal must describe two (2) past projects, specifying relevance to the current scope of work and include client references (names, addresses, email address and telephone numbers) for each project. Also, please submit APPENDIX G "Project/Contract Listing Form".

Evaluation Factor:
Points will be awarded based upon an evaluation of the documented organizational experience, knowledge and resources that may be employed for the project. Points will also be awarded based on Contractor's meeting project schedule agreed upon at the award of the contract. Considerations will be given if the project delay was caused by the City or NMDOT (APPENDIX G). Further, points will be awarded based on Offeror's candid and well-thought-out response to successes and failures, as well as the ability of the Offeror to learn from its failures and grow from its successes.

Scores:

AECOM	BHI	Earth & Steel	Huitt-Zollars	Lee Eng'g.	ME/ SMA	Molzen-Corbin	SFEC	WH Pacific	Wilson	WSP
19	16.8	10.8	16.8	18	13.8	17.5	Disqualified	17.8	16.8	17.5

Comments:

1) **AECOM** (19 points) provided two projects which highlighted the firm's capacity to act under duress and deliver projects by the required deadlines. The range of services provided further illustrates the capacity of the firm to act and deliver any type of engineering services listed in the SOW. However, the response, although quite detailed, did not provide enough discussion on cost and budget and lessons learned from successes and failures and how that will help the firm grow.

2) **BHI** (16.8 points) demonstrated the ability to meet the City's design deadlines, however no documentation was provided on project schedules, budgets, and no discussions on lessons learned from project successes and failures.

3) **Earth and Steel** (10.8 points) No historical documentation was provided to justify the Offeror's ability to meet schedules and budgets. Although the Offeror did not provide two projects the proposal did highlight the Offeror's approach to keeping a project schedule and containing costs, but some documentation was required.

4) **Huitt-Zollars** (16.8 points) highlighted two projects that were delayed and elaborated on the role additional scope can have on wrecking on a client's project timeline. In fact, the delay was over two years in both projects. The Offeror did not identify any lessons learned, if there were any, from these delays and how the firm will grow as a result.

The Offeror also failed to discuss whether project costs were attempted to be contained. Both projects were delayed for months while "securing funding" from the City. That raises the questions of whether the projects were funded in the first place or additional funding was required due to scope changes.

The lack of information made it hard for the Committee to assess Offeror's response to this question other than the Offeror has some experience and resources to deliver the roadway and trail projects described.

5) **Lee Engineering** (18 points) highlighted two traffic engineering projects, both of which undertook unique and creative approaches. For the Airport Road signal timing optimization project, the firm impressively adopted the scope/fee proposal to adjust to budget cuts, optimizing the level of documentation accordingly. With this project being in the middle of the pandemic, the firm had to adjust the project and adapt their approach to lower volumes. In terms of engineering approaches, the "rest-in-red" concept is unique and really meets the project goals in unique ways. These two projects are focused only on traffic engineering services in the SOW and some approaches from other types of engineering services would have further bolstered their score.

6) **ME/SMA** (13.8 points) provided little-to-no discussion on actual vs. projected scheduled completion and actual vs. final project costs. One of the project examples showed experience in coordinating with multiple City departments and the public. The proposal did not also detail any lessons learned from successes or failures and how it will help the firm grow.

7) **Molzen-Corbin** (17.5 points) not only highlighted two projects but provided their systematic approach to meeting budgets and schedules. A cost and schedule performance table were provided, providing data to support their ability to meet client goals. Some of these projects cost a bit more than the estimate but the projects were always completed on time. The two projects showcase the range of services in the firm, from a large roadway to lift station. One mechanism in the lift station the firm employed to control costs to meet the budget was bid additives to provide flexibility in awarding the project. However, there was no discussion of discrepancies between bid estimates and actual bid amounts. Also not discussed were their project successes and failures and how that will help the firm grow.

8) **WH Pacific** (17.5 points) demonstrated broad experience in several of the disciplines listed in the SOW. They have a lot of experience with on-call contracts. The 2 projects described laid out the capability of this Offeror to handle an array of projects with a variety of stakeholders. One highlight was the complexity NM 566 bridge replacement over BNSF railroad and adjacent to the Navajo Nation. The Lovingston road diet project highlighted an award for innovative design but did not detail in which ways the design was innovative to garner that award. The proposal further did not detail any lessons learned from successes or failures and how it will help the firm grow.

9) **Wilson** (16.8 points) demonstrated their ability to work in a tight window. Their ability to anticipate the critical path and potential long lead items as well as find solutions to prevent causing a delay in the project was key to their project success. Discussions on how project schedule and costs were controlled as well as any lessons learned were missing. Highlighting different projects than what were previously described could have been an opportunity.

10) **WSP** (17 points) featured two projects that are located within the City and displayed the Offeror's capabilities to deliver a range of projects. The culvert replacement project particularly highlighted the firm's capacity to deliver an expedited design to meet the city's needs after the collapse of the previous culvert, thus shutting down a roadway for months. The design team also showed some capacity to change after staking the proposed structure in the field.

However, the Offeror did not take time to elaborate on the project schedule established and how their team met that schedule. Further, on the Guadalupe St. Bridge Preservation, a project cost is detailed but no information is provided as to whether this met the project's budget, thus the Committee was unable to fully judge the Offeror's ability to meet budgets.

IV.B.3.d Proximity to or Familiarity with the City of Santa Fe (maximum 5 points)

Specifications:
Offeror **must** identify its familiarity with the City of Santa Fe and its understanding of the scope of work. Offerors must demonstrate through narrative, graphics or maps the firm's ability to respond quickly to on- and off-site requirements for engineering and construction management services and administration of a City project which will be awarded via this RFP. The Offeror must also indicate previous knowledge or experience regarding the City, and any current work or associated consultants who could enhance the firm's ability to provide timely responses or special expertise to a City project needs.

Evaluation Factor:
Points will be awarded based on the Offeror's familiarity with the City's procedural, procurement and regulatory design requirements; thorough understanding of the Scope of Work; and how quickly they can respond to City request/need.

Scores:

AECOM	BHI	Earth & Steel	Huitt-Zollars	Lee Eng'g.	ME/ SMA	Molzen-Corbin	SFEC	WH Pacific	Wilson	WSP
4.8	4.8	4.5	4	4.5	4.8	4.5	Disqualified	4.8	4.8	5

Comments:

1) **AECOM** (4.8 points) has a staff office in Santa Fe for quick response times. They also have several years of past experience working with the City of Santa Fe, thus have excellent knowledge of procedural, procurement, and regulatory design requirements.

2) **BHI** (4.8 points) demonstrated knowledge and work throughout Santa Fe. No staff located directly in Santa Fe but still within an hour in Albuquerque.

3) **Earth and Steel** (4.5 points) is located within Santa Fe, leading to good response time. Narrative is limited to familiarity with City regulations, procedures, and processes.

4) **Huitt-Zollars** (4 points) has prior experience with the City and demonstrated clear understanding of the SOW. However, the office is located 1 hour from Santa Fe.

5) **Lee Engineering** (4.5 points) currently has several projects with the City and is located within an hour of Santa Fe.

6) **ME/SMA** (4.8 points) has a satellite office in Santa Fe that provides close proximity. Acknowledgment of historical and cultural significance which requires unique solutions is a particular strength of the proposal.

7) **Molzen-Corbin** (4.5 points) demonstrated a lot of previous experience with multiple departments in City but they do not have an office in Santa Fe. Their office is in Albuquerque.

8) **WH Pacific** (4.8 points) demonstrated a good understanding of the SOW and highlighted several projects with City of Santa Fe. Their staff is based mainly in Albuquerque.

9) **Wilson** (4.8 points) has an extensive project history in City and knows the City's procedural, procurement, and regularly design requirements.

10) **WSP** (5 points) has several staff within the State, including an office in Santa Fe. They also showed they have several years of project experience with City of Santa Fe.

IV.B.3.e New Mexico Produced Work (maximum 5 points)

Specifications:
Offeror **must** indicate the volume of work to be produced in New Mexico by a New Mexico firm or firms. The Offeror must identify any out-of-state consultant(s) or business relationships that will be involved on any City project that will be awarded via this RFP, and the extent of services to be provided by that firm or firms.

Evaluation Factor:
Points will be awarded based on the percentage of work produced in New Mexico using the following formula:

0% - 20% - 1 point
21% - 40% - 2 points
41% - 60% - 3 points
61% - 80% - 4 points
81% - 100% - 5 points

Scores:

AECOM	BHI	Earth & Steel	Huitt-Zollars	Lee Eng'g.	ME/ SMA	Molzen-Corbin	SFEC	WH Pacific	Wilson	WSP
5	0	5	5	5	0	5	Disqualified	5	5	5

Comments:

1) **AECOM** (5 points) – 90% of work will be produced in New Mexico.

2) **BHI** (0 point) – Evaluation Committee did not award any points because the Offerors' response is not direct and subject to interpretation. The Offeror tried to answer this question indirectly by stating their firm is a NM-owned and –based so they anticipate completing all the work in NM.

3) **Earth and Steel** (5 points) – 100% of work will be produced in New Mexico.

4) **Huitt-Zollars** (5 points) – 100% of work will be produced in New Mexico.

5) **Lee Engineering** (5 points) – 100% of work will be produced in New Mexico.

6) **ME/SMA** (0 point) – The Evaluation Committee did not award any points because the Offeror 's response is quite vague; stating a "substantial" portion of the work will be completed in NM.

7) **Molzen-Corbin –** 100% of work will be produced in New Mexico.

8) **WHPacific –** 100% of work will be produced in New Mexico.

9) **Wilson –** 100% of work will be produced in New Mexico.

10) **WSP –** 100% of work will be produced in New Mexico.

IV.B.3.f Volume of Work Currently Being Performed (0 to 5 point deduction). For Munis scores, see change in the scoring method below.**

Specifications:
Offeror **must** provide information on the status of any project that has been awarded by the City in the past four (4) years and is, on the date of the submittal, less than 75% complete by completing the "Contract/Project Listing Form" (APPENDIX G). The reason for any project delays must be identified.

Evaluation Factor:
Points shall be deducted for projects awarded that are less than 75% complete on the date the proposals are due. The following formula on fees shall be utilized in assessing scores:

Contract Balance Amount* Per Project	
$ Less than - $500,000	minus 0 point
$500,001 - $750,000	minus 1 point
$750,001 - $1,000,000	minus 2 points
$1,000,001- over	minus 3 points

*Contract Balance Amount is defined as:

i. Single Phase Contracts: Amount of contract including supplemental agreements that have been negotiated and that are covered under a signed contract, minus all paid invoices, if any (per project).

ii. Multi-Phase Contracts: Amount of contract including all subsequent phases and supplemental agreements that have been negotiated and that are covered under a signed contract, minus all paid invoices, if any (per project).

The maximum total point deduction for this section (sum of all ongoing contracts) will be 5 points. Deduction points will be calculated on the date the proposals are due. The Offeror must invoice against ongoing contracts not less than five (5) business days prior to proposal due date to allow sufficient time for posting to Deduction Point listing. No points will be deducted if the delay was caused by either the City or NMDOT. For example, if work has to stop due to delay in amending the term of the funding agreement.

**** When recording scores in Munis, it was determined that Munis won't accept a negative score, therefore the scoring methodology was adjusted to positive scores in Munis as follows:**

Maximum score is 5 points.

Contract Balance Amount per Project

	RFP Scoring	**Munis Scoring**
$ Less than - $500,000	**minus 0 point**	**add 5 points**
$500,001 - $750,000	**minus 1 point**	**add 4 points**
$750,001 - $1,000,000	**minus 2 points**	**add 3 points**
$1,000,001- over	**minus 3 points**	**add 2 points**

Using the above methodology, Offeror's scores are:

Scores:

	AECOM	BHI	Earth & Steel	Huitt-Zollars	Lee Eng'g.	ME/ SMA	Molzen-Corbin	SFEC	WH Pacific	Wilson	WSP
RFP Scoring	-4	0	0	0	0	0	0	Disqualified	0	-2	0
Munis Scoring	1	5	5	5	5	5	5	Disqualified	5	3	5

Comments:

1) **AECOM** (-4) is working on 2 projects with the City with a remaining balance in the range of $750,001 - $1,000,000. Using the scoring method in the RFP, AECOM has a deduction of -4. In Munis, the score is 1 (maximum score of 5 minus 4).

2) **BHI** (0 point) currently has no project with the City with a remaining balance of over $500,000. Hence, no points were deducted.

3) **Earth & Steel** (0 point) is not working on any project with the City. Hence, no points were deducted.

4) **Huitt-Zollars** (0 point) does not have any projects with the City at the time of proposal submittal. Hence, no points were deducted.

5) **Lee Eng'g.** (0 point) does not have any projects with the City with a remaining balance of over $500,000. Hence, no points were deducted.

6) **ME/SMA** (0 point) does not have any projects with the City with a remaining balance of over $500,000. Hence, no points were deducted.

7) **Molzen Corbin** (0 point) does not have any projects with the City with a remaining balance of over $500,000. Hence, no points were deducted.

8) **WHPacific** (0 point) does not have any projects with the City with a remaining balance of over $500,000. Hence, no points were deducted.

9) **Wilson** (-2 points) has one project with the City with a remaining balance in the range of $750,001 - $1,000,000. Using the RFP scoring method, they had a 2-point deduction. In Munis, the final score is 3 (maximum score of 5 minus 2).

10) **WSP** (0 point) does not have any project with the City with a remaining balance of over $500,000. Hence, no points were deducted.

On-Call General Engineering Services for Roadway, Trail, Bridge, Drainage, Facility, Utility and Traffic Design

RFP# 24001 Evaluation Summary

Table 1. Evaluation Summary for AECOM, BHI, Earth & Steel, Huitt-Zollars and Lee Eng'g.

RFP Section IV	Evaluation Factors	Maximum Points Available	AECOM	BHI	Earth & Steel	Huitt-Zollars	Lee Eng'g.
B.	**Technical Specifications**						
B.1.	General Information	5	5	4.8	4.3	5	5
B.2.	Organizational References	15	13.6	13.6	0	9.0	9.8
B.3.	Mandatory Specifications						
B.3.a.	Specialized Design and Technical Competence	25	24.4	22	20	18.3	21.3
B.3.b.	Capacity and Capability of the Offeror to Perform the Scope of Work	25	24.8	23	18.5	22	21.8
B.3.c.	Past Record of Performance	20	19	16.8	10.8	16.8	18
B.3.d.	Proximity to or Familiarity with the City of Santa Fe	5	4.8	4.8	4.5	4	4.5
B.3.e.	New Mexico Produced Work	5	5	0	5	5	5
B.3.f.	Volume of Work Currently Being Performed	0-5 Point Deduction	-4	0	0	0	0
C.	**Business Specifications**						
C.1.	Letter of Transmittal	Pass/Fail	Pass	Pass	Pass	Pass	Pass
C.2.	Campaign Contribution Disclosure Form	Pass/Fail	Pass	Pass	Pass	Pass	Pass
C.3.	Non-Collusion Affidavit Form	Pass/Fail	Pass	Pass	Pass	Pass	Pass
C.4.	Conflict of Interest	Pass/Fail	Pass	Pass	Pass	Pass	Pass

RFP Section IV	Evaluation Factors	Maximum Points Available	AECOM	BHI	Earth & Steel	Huitt-Zollars	Lee Eng'g.
	Statement for Consulting Firms						
C.5.	Confidentiality and Non-Disclosure Agreement Form	Pass/Fail	Pass	Pass	Pass	Pass	Pass
C.6.	Sub-Consultants Offeror's List	Pass/Fail	Pass	Pass	Pass	Pass	Pass
	TOTAL POINTS	**100 maximum points**	**92**	**85**	**63**	**80**	**85**

Table 2. Evaluation Summary for ME/SMA, Molzen Corbin, SFEC, WHPacific, Wilson and WSP

RFP Section IV	Evaluation Factors	Maximum Points Available	ME/SMA	Molzen Corbin	SFEC	WHPacific	Wilson	WSP
B.	**Technical Specifications**							
B.1.	General Information	5	4.8	4.8	NA	4.8	3.8	5
B.2.	Organizational References	15	13.5	14.5	NA	14.5	14	13.8
B.3.	Mandatory Specifications							
B.3.a.	Specialized Design and Technical Competence	25	20.3	24	NA	22.3	23.3	21
B.3.b.	Capacity and Capability of the Offeror to Perform the Scope of Work	25	20.3	23	NA	21.5	23.3	22.5
B.3.c.	Past Record of Performance	20	13.8	17.5	NA	17.8	16.8	17.5
B.3.d.	Proximity to or Familiarity with the City of Santa Fe	5	4.8	4.5	NA	4.8	4.8	5
B.3.e.	New Mexico Produced Work	5	0	5	NA	5	5	5
B.3.f.	Volume of	0-5 Point	0	0	NA	0	-2	0

RFP Section IV	Evaluation Factors	Maximum Points Available	ME/SMA	Molzen Corbin	SFEC	WHPacific	Wilson	WSP
	Work Currently Being Performed	Deduction						
C.	**Business Specifications**							
C.1.	Letter of Transmittal	Pass/Fail	Pass	Pass	Pass	Pass	Pass	Pass
C.2.	Campaign Contribution Disclosure Form	Pass/Fail	Pass	Pass	Pass	Pass	Pass	Pass
C.3.	Non-Collusion Affidavit Form	Pass/Fail	Pass	Pass	Pass	Pass	Pass	Pass
C.4.	Conflict of Interest Statement for Consulting Firms	Pass/Fail	Pass	Pass	Pass	Pass	Pass	Pass
C.5.	Confidentiality and Non-Disclosure Agreement Form	Pass/Fail	Pass	Pass	Pass	Pass	Pass	Pass
C.6.	Sub-Consultants Offeror's List	Pass/Fail	Pass	Pass	Fail	Pass	Pass	Pass
	TOTAL POINTS	**100 maximum points**	**77**	**93**	**NA**	**91**	**89**	**90**

Based on the Evaluation of the proposals submitted, as detailed above, the Evaluation Committee respectfully recommends awarding all Offerors that received a total score of 85 points and above, an on-call contract. The Offerors are: Molzen-Corbin (93), AECOM (92), WH Pacific (91), WSP (90), Wilson (89), BHI (85), and Lee Engineering (85). Awarding on-call contracts to the recommended Offerors are in the best interest and is most advantageous to the City of Santa Fe.

Evaluation Committee Members:

Michael Dalmolin — 05/23/2024

Dalmolin, Mike PE, Traffic Operations Engineer — Date
Public Works – Complete Streets

Zoe Isaacson — 05/23/2024

Isaacson, Zoë River and Watershed Manager — Date
Public Works – Parks and Open Space

Taylor Jurgens — 5/24/2024

Jurgens, Taylor PE, Engineer — Date
Public Utilities – Water

Jeanne Wolfenbarger — 05/28/2024

Wolfenbarger, Jeanne PE, Traffic Engineer — Date
Public Works – Complete Streets

Procurement Manager

Romella Glorioso-Moss — 05/31/2024

Glorioso-Moss, Romella PhD, CPM — Date
Complete Streets Capital Projects Manager
Public Works – Complete Streets

CITY OF SANTA FE

The Purchasing Memo

Date: December 16, 2025

To: Governing Body, Finance Committee, and Public Works & Utilities Committee

From: Clinton Peterson, Engineer CDP

Via: Jesse Roach, Interim Public Utilities Director JR

Jonathan Montoya, Interim Water Division Director JM

Subject: Flocculation and Sedimentation Improvement Amendment 1

Vendor Name: Bradbury Stamm Construction

Munis Vendor Number: 1662

ITEM AND ISSUE:

The Public Utilities Department respectfully requests your review and approval of an Amendment #1 to Contract 3260113 with Bradbury Stamm Construction for Construction Services. Amendment 1 Decreases the amount of compensation in order to correct the GRT percentage by $287,205.18 for a total compensation of $23,386,708.13 including NMGRT for the original term of the Contract.

CONTRACT NUMBER:

The FY25/26 Munis contract number 3260113.

BACKGROUND AND SUMMARY:

The Flocculation and Sedimentation Improvement project is underway at the Canyon Road Water Treatment Plant. The original Contract between the City and Bradbury Stamm originally stated a Gross Receipts Tax amount equal to the City rate of 8.1875%. However, the construction work will take place entirely within the Canyon Road Water Treatment Plant, which is located in the County. The correct tax rate should be amended to the County rate of 6.875% instead, which will lower the overall Contract amount. All other amounts will remain unchanged, as will the term of the Contract.

PRIOR APPROVALS AND SUPPORTING INFORMATION:

FUNDING SOURCE:

Fund Name/Number: Water Management / 505

Munis Org Name/Number: Water Capital Projects / 5050395

Munis Object Name/Number: WIP Construction / 572970

Budget Officer / Designee: Andy Hopkins **Date:** 01/05/2026

Budget Officer Comment/Exceptions: _____

PROCUREMENT METHOD:

The procurement method used was NMSA 1978, Section 13-1-102, ITB

The Santa Fe Water Division solicited bids through a competitive ITB process for the Flocculation and Sedimentation Improvements Project, ITB #25049 in May of 2025. The winning bid was awarded to Bradbury Stamm. The Munis Contract Number is 3260113.

Chief Procurement Officer (CPO)/Designee: _____ **Date:** 01/08/2026

CPO Comment/Exceptions: _____

ASSOCIATED APPROVALS:

IT Components included? ☐ **Yes** | ☒ **No**

Approval: _____ **Title:** _____ **Date:** _____

Comment/Exceptions: _____

Treasury/Point of Sale Components included? ☐ **Yes** | ☐ **No**

Approval: _____ **Title:** _____ **Date:** _____

Comment/Exceptions: _____

Vehicles included? ☐ **Yes** | ☒ **No**

Approval: _____ **Title:** _____ **Date:** _____

Comment/Exceptions: _____

Construction to City Facilities, Furniture, and/or Fixtures included? ☒ **Yes** | ☐ **No**

Approval: JOHN BURNETT (Dec 22, 2025 08:34:56 MST) **Title:** Interim Public Works Director **Date:** 12/22/2025

Comment/Exceptions: _____

Is this an externally funded purchase? ☐ **Yes** | ☒ **No**

If yes, what is the issuing agency: _____

Approval: _____ **Title:** _____ **Date:** _____

Comment/Exceptions: _____

Is this a Capital Asset or Project? ☒ **Yes** | ☐ **No**

Project Ledger Number: **WTR2650501**

Approval: Rebecca Lovato-Sanowong **Title:** Accounting Manager **Date:** 12/22/2025

Comment/Exceptions: _____

ATTACHMENTS:
Original contract packet
Amendment #1
Certificate of Liability Insurance (COI)

Item #: _____
Munis Contract #: 3260113
Original Contract Item #: 25-0425
ITB #: 24002

CITY OF SANTA FE, PUBLIC UTILITIES DEPARTMENT
AMENDMENT No. 1 TO
Munis Contract # 3260113

Flocculation and Sedimentation Improvements

This AMENDMENT No. 1 (the "Amendment") amends the CITY OF SANTA FE CONTRACT, dated 9/15/2025 (the "Contract"), between the City of Santa Fe (the "City") and Bradbury Stamm Construction. (the "Contractor"). The date of this Amendment shall be the date when it is executed by the City and the Contractor whichever occurs last.

RECITALS:

A. Under the terms of the Contract, Contractor has agreed to provide the City with Construction Services at Canyon Road Water Treatment Plant for the Flocculation and Sedimentation Improvements project.

B. Pursuant to Article 14 of the Contract, and for good and valuable consideration, the receipt and sufficiency of which are acknowledged by the parties, the City and the Contractor agree as follows:

1. COMPENSATION.

Article 2, paragraph A of the Contract is amended to correct the rate of Gross Receipts Tax to the County rate of 6.875% so that Article 3, paragraph A reads in its entirety as follows:

The City shall pay to the Contractor in full payment for services satisfactorily performed, and such compensation not to exceed $21,882,300, excluding gross receipts tax. The New Mexico gross receipts tax levied on the amounts payable under this Contract shall be paid by the City to the Contractor, as follows:

The Unit Bid Contract Total is determined as follows:

Base Bid	$19,893,000.00
Unanticipated Cost Overrun	$1,989,300.00
Gross Receipts Tax (6.875%)	$1,504,408.13
Base Bid plus Unanticipated Cost Overrun plus NMGRT	$23,386,708.13

The total amount payable to the Contractor under this Contract, including Alternates (if needed) gross receipts tax and expenses, shall not exceed $23,386,708.13 (Twenty-three million, three-hundred eighty-six thousand, seven hundred eight dollars and thirteen cents). This amount is a maximum and not a guarantee that the work assigned to be performed by Contractor under this Contract shall equal the amount stated herein. The parties do not intend for the Contractor to continue to provide services without compensation when the total compensation amount is reached. Contractor is responsible for notifying the City when the services provided under this Contract reach the total compensation amount. In no event will the Contractor be paid for services provided in excess of the total compensation amount without this Contract being amended in writing prior to those services in excess of the total compensation amount being provided.

2. CONTRACT IN FULL FORCE.

Except as specifically provided in this Amendment, the Contract remains and shall remain in full force and effect, in accordance with its terms.

[REMAINDER OF PAGE INTENTIONALLY LEFT BLANK]
[SIGNATURE PAGE TO FOLLOW]

IN WITNESS WHEREOF, the parties have executed this Amendment No. 1 to the Contract as of the dates set forth below.

CITY OF SANTA FE:

_____

_____, MAYOR

DATE:_____

CONTRACTOR:
BRADBURY STAMM CONSTRUCTION

Cynthia Shultz (Dec 12, 2025 10:57:02 MST)
_____
CYNTHIA SHULTZ, CEO

DATE: Dec 12, 2025
_____
NMBTIN: _____

ATTEST:

_____

_____, CITY CLERK

CITY ATTORNEY'S OFFICE:

Marcos Martínez
Marcos Martínez (Dec 12, 2025 10:58:42 MST)
_____
MARCOS MARTÍNEZ, SENIOR ASSISTANT CITY ATTORNEY

APPROVED FOR FINANCES:

BRIAN MOYA
_____

BRIAN MOYA
_____,~~FINANCE DIRECT~~OR

Interim City Manager

BRADSTA-03 JBENALLY

CERTIFICATE OF LIABILITY INSURANCE

DATE (MM/DD/YYYY) 7/23/2025

THIS CERTIFICATE IS ISSUED AS A MATTER OF INFORMATION ONLY AND CONFERS NO RIGHTS UPON THE CERTIFICATE HOLDER. THIS CERTIFICATE DOES NOT AFFIRMATIVELY OR NEGATIVELY AMEND, EXTEND OR ALTER THE COVERAGE AFFORDED BY THE POLICIES BELOW. THIS CERTIFICATE OF INSURANCE DOES NOT CONSTITUTE A CONTRACT BETWEEN THE ISSUING INSURER(S), AUTHORIZED REPRESENTATIVE OR PRODUCER, AND THE CERTIFICATE HOLDER.

IMPORTANT: If the certificate holder is an ADDITIONAL INSURED, the policy(ies) must have ADDITIONAL INSURED provisions or be endorsed. If SUBROGATION IS WAIVED, subject to the terms and conditions of the policy, certain policies may require an endorsement. A statement on this certificate does not confer rights to the certificate holder in lieu of such endorsement(s).

PRODUCER License # 0757776
HUB International Insurance Services (SOW)
6565 Americas Parkway Suite 720
Albuquerque, NM 87110

CONTACT NAME: Carrie Butler
PHONE (A/C, No, Ext): (505) 262-9412 9412
FAX (A/C, No): (866) 487-3972
E-MAIL ADDRESS: Carrie.Butler@hubinternational.com

INSURER(S) AFFORDING COVERAGE	NAIC #
INSURER A : Zurich American Insurance Company	16535
INSURER B : Allied World Insurance Company	22730
INSURER C :	
INSURER D :	
INSURER E :	
INSURER F :	

INSURED
Bradbury Stamm Construction, Inc.
7110 2nd St NW
Albuquerque, NM 87107

COVERAGES **CERTIFICATE NUMBER:** **REVISION NUMBER:**

THIS IS TO CERTIFY THAT THE POLICIES OF INSURANCE LISTED BELOW HAVE BEEN ISSUED TO THE INSURED NAMED ABOVE FOR THE POLICY PERIOD INDICATED. NOTWITHSTANDING ANY REQUIREMENT, TERM OR CONDITION OF ANY CONTRACT OR OTHER DOCUMENT WITH RESPECT TO WHICH THIS CERTIFICATE MAY BE ISSUED OR MAY PERTAIN, THE INSURANCE AFFORDED BY THE POLICIES DESCRIBED HEREIN IS SUBJECT TO ALL THE TERMS, EXCLUSIONS AND CONDITIONS OF SUCH POLICIES. LIMITS SHOWN MAY HAVE BEEN REDUCED BY PAID CLAIMS.

INSR LTR	TYPE OF INSURANCE	ADDL INSD	SUBR WVD	POLICY NUMBER	POLICY EFF (MM/DD/YYYY)	POLICY EXP (MM/DD/YYYY)	LIMITS	
A	X COMMERCIAL GENERAL LIABILITY CLAIMS-MADE [X] OCCUR GEN'L AGGREGATE LIMIT APPLIES PER: POLICY [X] PRO-JECT [X] LOC OTHER:	X	X	GLO 2927129 - 03	7/1/2025	7/1/2026	EACH OCCURRENCE DAMAGE TO RENTED PREMISES (Ea occurrence) MED EXP (Any one person) PERSONAL & ADV INJURY GENERAL AGGREGATE PRODUCTS - COMP/OP AGG	$ 2,000,000 $ 1,000,000 $ 10,000 $ 2,000,000 $ 4,000,000 $ 4,000,000
A	AUTOMOBILE LIABILITY X ANY AUTO OWNED AUTOS ONLY / SCHEDULED AUTOS HIRED AUTOS ONLY / NON-OWNED AUTOS ONLY	X	X	BAP 2927130-03	7/1/2025	7/1/2026	COMBINED SINGLE LIMIT (Ea accident) BODILY INJURY (Per person) BODILY INJURY (Per accident) PROPERTY DAMAGE (Per accident)	$ 5,000,000 $ $ $
B	X UMBRELLA LIAB [X] OCCUR EXCESS LIAB CLAIMS-MADE DED [X] RETENTION $ 10,000	X	X	0313-8176	7/1/2025	7/1/2026	EACH OCCURRENCE AGGREGATE Aggregate	$ 5,000,000 $ $ 5,000,000
A	WORKERS COMPENSATION AND EMPLOYERS' LIABILITY ANY PROPRIETOR/PARTNER/EXECUTIVE OFFICER/MEMBER EXCLUDED? (Mandatory in NH) Y/N [N] N/A If yes, describe under DESCRIPTION OF OPERATIONS below		X	WC 2927128-03	7/1/2025	7/1/2026	X PER STATUTE / OTH-ER E.L. EACH ACCIDENT E.L. DISEASE - EA EMPLOYEE E.L. DISEASE - POLICY LIMIT	$ 1,000,000 $ 1,000,000 $ 1,000,000

DESCRIPTION OF OPERATIONS / LOCATIONS / VEHICLES (ACORD 101, Additional Remarks Schedule, may be attached if more space is required)
Additional Insured, Primary Non--Contributory, Waiver of Subrogation and 30 Day Notice of Cancellation apply per attached policy forms.

Project: Santa Fe Canyon Road Flocculation and Sedimentation

CERTIFICATE HOLDER

Canyon Road Water Treatment Plant
1780 Upper Canyon Road
Santa Fe, NM 87501

CANCELLATION

SHOULD ANY OF THE ABOVE DESCRIBED POLICIES BE CANCELLED BEFORE THE EXPIRATION DATE THEREOF, NOTICE WILL BE DELIVERED IN ACCORDANCE WITH THE POLICY PROVISIONS.

AUTHORIZED REPRESENTATIVE

ACORD 25 (2016/03)

© 1988-2015 ACORD CORPORATION. All rights reserved.
The ACORD name and logo are registered marks of ACORD

CITY OF SANTA FE

The Purchasing Memo

Date: August 11, 2025

To: Governing Body, Finance Committee, and Public Works & Utilities Committee

From: Clinton Peterson, Water Division Engineer

Via: Jesse Roach, Interim Public Utilities Department Director

Jonathan Montoya, Interim Water Division Director Jonathan Montoya (Aug 12, 2025 14:58:41 MDT)

Subject: Flocculation and Sedimentation Improvements BAR and Contract Approval

Vendor Name: Bradbury Stamm Construction

Munis Vendor Number: 1662

ITEM AND ISSUE:

The Public Utilities Department respectfully requests your review and approval of a Construction Contract in the total amount not to exceed $21,882,300, excluding gross receipts tax for a term until 12/31/28 with Bradbury Stamm; Request review and approval of a Budget Adjustment Resolution (BAR) in the amount of $12,000,000 from the Water Enterprise Fund to WIP Construction to fund the above Contract for this Fiscal Year.

CONTRACT NUMBER:

The FY26/27 Munis contract number is 3260113.

BACKGROUND AND SUMMARY:

The Canyon Road Water Treatment Plant (CRWTP) is one of two primary surface water treatment plants that provide potable drinking water to the City of Santa Fe. A Comprehensive Performance Evaluation completed by Carollo, an engineering consultant, in 2020 that recommended a list of key infrastructure improvements that would upgrade and replace aging equipment at the CRWTP. Several of the items on this list that were deemed high priority to keep the CRWTP functional were designed by Carollo as the Flocculation and Sedimentation Improvements project (CIP# 39115). The design was completed in 2021. The project initially solicited bids through the Invitation to Bid (ITB) process but only received a single bid in August of 2024, which exceeded the engineer's estimate of cost.

The Santa Fe Water Division once again solicited bids through a competitive ITB process for the Flocculation and Sedimentation Improvements Project, ITB #25049 in May of 2025. The winning bid is from Bradbury Stamm Construction. Bradbury Stamm was the lowest bidder out of three bidders and provided all expectations and requirements for the project. The base bid is for $19,893,00.00 with an unanticipated cost overrun amount of $1,989,300.00. Total project cost including NMGRT of $1,791,613.31 is $23,673,913.31.

The Flocculation and Sedimentation Improvements Project is a large CIP construction project that will be managed by the Water Division Engineering Section. The project team will include design engineering and construction management support from external firms in addition to the prime construction contractor. The project is estimated to be completed within 27 months, but the exact schedule will need to be negotiated and proposed by Bradbury Stam. Additionally, the schedule is impacted by seasonal operations tied to demand and work restrictions detailed in the project specifications.

The Water Division is seeking review and approval of the above Contract as well as a BAR in the amount of $12,000,000 from the Water Enterprise Fund into the WIP Construction account to fund the project for this fiscal year FY26/27.

PRIOR APPROVALS AND SUPPORTING INFORMATION:

FUNDING SOURCE:

Fund Name/Number: Water Management / 505

Munis Org Name/Number: Water Capital Projects / 5050395

Munis Object Name/Number: WIP Construction / 572970

Budget Officer / Designee: Andy Hopkins **Date:** 08/13/2025

Budget Officer Comment/Exceptions: -

PROCUREMENT METHOD:

The procurement method used was NMSA 1978, Section 13-1-102, ITB

The Santa Fe Water Division once again solicited bids through a competitive ITB process for the Flocculation and Sedimentation Improvements Project, ITB #25049 in May of 2025. The winning bid is from Bradbury Stamm. The Munis Contract Number is 3260113.

Chief Procurement Officer (CPO)/Designee: _____ **Date:** 08/14/2025

CPO Comment/Exceptions: _____

ASSOCIATED APPROVALS:

IT Components included? ☐ **Yes** | ☒ **No**

Approval: _____ **Title:** _____ **Date:** _____

Comment/Exceptions: _____

Treasury/Point of Sale Components included? ☐ **Yes** | ☐ **No**

Approval: _____ **Title:** _____ **Date:** _____

Comment/Exceptions: _____

Vehicles included? ☐ **Yes** | ☒ **No**

Approval: _____ **Title:** _____ **Date:** _____

Comment/Exceptions: _____

Construction to City Facilities, Furniture, and/or Fixtures included? ☒ **Yes** | ☐ **No**

Approval: Timothy Farrell **Title:** Property Development Manager **Date:** 08/13/2025

Comment/Exceptions: _____

Is this an externally funded purchase? ☐ **Yes** | ☒ **No**

If yes, what is the issuing agency: _____

Approval: _____ **Title:** _____ **Date:** _____

Comment/Exceptions: _____

Is this a Capital Asset or Project? ☒ **Yes** | ☐ **No**

Project Ledger Number: **WTR2650501**

Approval: Rebecca Lovato-Sanouvong (Aug 13, 2025 15:25:13 MDT) **Title:** Accounting Manager **Date:** 08/13/2025

Comment/Exceptions: _____

ATTACHMENTS:

Horizons declination
CPO Service Determination Email
Procurement document: ITB
Vendor's Bid
Certificate of Liability Insurance (COI)
Professional Services Contract
BAR

Construction Contract Attachments:

Non-Collusion Affidavit of Subcontractor
Statement of Intent to pay prevailing wages
Affidavit of Wages Paid
Weekly Payroll Form
Payroll Statement of Compliance
Performance bond
Payment bond

Log # *{Finance use only}*:	
Journal # *{Finance use only}*:	

City of Santa Fe, New Mexico
BUDGET AMENDMENT RESOLUTION (BAR)

DEPARTMENT / DIVISION NAME	DATE
Public Utilities Department / Water Division	11/20/2024

ITEM DESCRIPTION	ORG	OBJECT	PROJECT	INCREASE	DECREASE
EXPENDITURES				*{enter as positive #}*	*{enter as negative #}*
Wtr Capital Proj, WIP Construction	5050395	572970	WTR2650501	12,000,000	
REVENUES				*{enter as negative #}*	*{enter as positive #}*
JUSTIFICATION: *(use additional page if needed)* *--Attach supporting documentation/memo*				$ 12,000,000	$ -

Please see attached Memo.

The City of Santa Fe Public Utilities Department requests approveal of this BAR to allocate funds for water-related construction services executed per the attached contract for CIP project Flocculation and Sedimentation Improvements for the Canyon Road Water Treatment Plant. The associated procurement was via ITB procurement for vendor Bradbury Stamm Construction. This BAR is anticipating costs for this fiscal year's PO and not for the full contract amount. Additional BAR(s) will be required for POs for future FY's throughout the lifespan of the project.

{Complete section below if BAR results

Fund(s) Affected	Fund Balance Increase/(Decrease)
505	(12,000,000)
TOTAL:	**(12,000,000)**

Clinton Peterson — 8/4/2025
Prepared By *{print name}* — Date

{Use this form for Finance Committee/ City Council agenda items ONLY}

CITY COUNCIL APPROVAL

City Council Approval Date

Agenda Item #:

Andy Hopkins — 08/13/2025
Budget Officer — Date

Division Director Signature *{optional}* — Date

Finance Director *{≤ $5,000}* — Date

Jonathan Montoya — 08/13/2025
Jonathan Montoya (Aug 13, 2025 13:22:55 MDT)
Department Director Signature — Date

City Manager *{≤ $60,000}* — Date

City of Santa Fe New Mexico

Finance Department

Project Ledger Request Form

Date of Request: 8/4/2025

Project Title: Flocculation and Sedimentation Improvements Construction

Project Type: ☑ CIP ☐ Grant ☐ Internal Tracking

Project ID: WTR2650501

Grant ID: N/A

Approved By: ERIKA LUJAN
ERIKA LUJAN (Aug 6, 2025 15:32:41 MDT)

CT (Finance Use Only)

Department: Public Utilities Project Manager: Clinton Peterson Ext: 4369

Project Date Range: 8/27/2025 to 12/31/2028 ☐ Create Fixed Asset

---

☐ Multi-Funding (complete all funding sources, should equal 100%)

Funding Source: WIP Construction % of Funding: 100

MUNIS ORG: 5050395 MUNIS OBJ: 572970 Awarded Amount: $23,673,913.31

Funding Source: _____ % of Funding: _____

MUNIS ORG: _____ MUNIS OBJ: _____ Awarded Amount: _____

Expense String Phase:

A project must have at least one phase identified, this can be used as an additional level of tracking, for example, CIP - Design, Construction, etc. For Grants can be used as reimbursable types, such as transportation, salaries.

(You can create more than one phase and you can default MUNIS ORGs and OBJs, optional)

Phase: 1 MUNIS ORG: 5050395 MUNIS OBJ: 572970

Grants Only (list all grants if applicable):

Grantor Name: N/A Awarded Amount: N/A

AR Charge Code: _____ ☐ Grant funds multiple projects (Complete a form for each project)

Grantor Id: _____ Federal CFDA (if applicable): N/A

Grantor Name: _____ Awarded Amount: _____

AR Charge Code: _____ ☐ Grant funds multiple projects (Complete a form for each project)

Grantor Id: _____ Federal CFDA (if applicable): _____

(If grants please provide all grant award documents with form) ☐ Attached Grant Documentation

From: Matt Loehman
To: PETERSON, CLINTON D.
Cc: jperez@horizonsofnewmexico.org; gblock@horizonsofnewmexico.org
Subject: Re: Horizons first right of declination
Date: Monday, August 4, 2025 4:23:57 PM
Attachments: image001.png

CAUTION: This email originated from outside of the organization. Do not click links or open attachments unless you recognize the sender and know the content is safe.

Good afternoon -

Thank you very much for the opportunity, but we will decline this procurement.

Best regards,

Matt

Matt Loehman
Executive Director

Horizons of New Mexico
6121 Indian School Rd. NE, Suite 220
Albuquerque, NM 87110

office phone: (505) 345-1540
email: mloehman@horizonsofnewmexico.org
web: www.horizonsofnewmexico.org

The State Use Act helps people with disabilities become gainfully employed, and it saves you valuable time and resources otherwise used during the procurement process.

On Mon, Aug 4, 2025 at 4:22 PM PETERSON, CLINTON D. <cdpeterson@santafenm.gov> wrote:

> Hello,
>
> I have a ~20 million dollar construction project for renovations to our water treatment plant that we went out for public bidding via ITB in May of 2025. Is this something that Horizons would like to do?

Clinton Peterson, P.E.

Engineer, Water Division

City of Santa Fe

Phone: 505-955-4369

From: DUTTON-LEYDA, TRAVIS K.
To: PETERSON, CLINTON D.
Cc: Purchasing DET
Subject: RE: Determination Request for Construction Services
Date: Monday, August 4, 2025 4:42:31 PM
Attachments: image002.png
image004.png

Greetings,
Based on the information provided, the scope of work is classified as **Construction**. This determination is made solely for the purpose of addressing the classification question and does not constitute a comprehensive review of the scope or the procurement method's compliance with all applicable legal or regulatory requirements.
This determination is subject to change if the scope of work is modified from the original submission.
The procurement process must comply with all applicable requirements, including but not limited to:

- The City of Santa Fe's Procurement Manual
- Central Purchasing procedures
- Applicable state statutes
- Requirements of the New Mexico Department of Workforce Solutions, if applicable

Please note:

- Save this email as a PDF and upload it into the corresponding Munis record(s).
- If your request includes anything that needs to be reviewed and preapproved by another City Department/Division, please send the same SOW to the corresponding email address and include their response in your packet/Munis.

-Treasury (Point of Sale Systems) – questions: drsena@santafenm.gov; clromero@santafenm.gov. Request signature from: clromero@santafenm.gov
-IT components (everything IT) – questions: ereview@santafenm.gov. Request signature from: edcandelaria@santafenm.gov;
Copy: zxdushdurova@santafenm.gov; lenobes@santafenm.gov; lfworstell@santafenm.gov
-Vehicles – questions: fleet@santafenm.gov. Request signature from: dmjaramillo@santafenm.gov
-Grants – questions: grants@santafenm.gov. Request signature from: evlujan@santafenm.gov
- Construction, Facilities, Furniture, Fixtures, Equipment, etc. – questions: fmdreview@santafenm.gov. Request signature from: jsburnett@santafenm.gov_
-Emergency Related Purchases – questions oem@santafenm.govand. Request signature from: klmorgan@santafenm.gov
-Asset over $5k – questions: accountspayable@santafenm.gov. Request signature from: jxbolden@santafenm.gov

- Ensure that the appropriate templates and forms are used https://intranet.santafenm.gov/finance_1 and documented procedures/laws/rules are followed.
- When processing this procurement, please ensure the procurement number issued by Munis and the procurement name are used in the appropriate documents and the subject of emails.
- If you are processing a procurement where the forecasted amount is =/> $60k, per NMSA 1978, Section 13-1-102, the procurement method must be ITB (if you

choose not to use a cooperative or an existing contract). If you feel you need to process an RFP, you must get an Authorization and Plan approved before you process.

- < $20k per year, one quote is acceptable.
- From $20k to $60k per year, if you aren't using a cooperative or existing contract, you must provide 3 quotes in your req. Must use the Munis Bid Module, OpenGov, or Pavilion.
- **Identify your funding source and notify Purchasing.**
  It's essential to determine the funding source early, as it impacts the required documentation and contract language. For example, if federal funds are being used, specific federal provisions must be included in both the procurement request and the resulting contract. Notifying Purchasing of the funding source upfront ensures compliance and avoids delays.
- Follow the link below to review existing price agreements, contracts, or cooperative agreements that might be applicable to this request. You might be able to use an existing price agreement/contract to save time and money.
  - Pavilion: Free Cooperative Contract Search for Governments (please work with Purchasing if you think you found an existing or cooperative contract that might work)
- Submit via **Submit Purchase Requests** or the appropriate email address:
  - Determination requests to purchasing_det@santafenm.gov
  - All other requests to purchasing@santafenm.gov

Thank you for submitting this scope of work for my review.

Book time to meet with me

Regards,

Travis Dutton-Leyda, City of Santa Fe Chief Procurement Officer
200 Lincoln Avenue
Santa Fe, NM 87501
505-629-8351
tkduttonleyda@santafenm.gov

Vendor Registration Sites and Current Procurement Opportunities:
[Current] https://santafenm.munisselfservice.com/vss/

[Transitioning] https://procurement.opengov.com/portal/santafenm
[Current] https://www.withpavilion.com/
Internal Link: https://intranet.santafenm.gov/central_purchasing_division_cpd

CITY OF SANTA FE
FINANCE

"A journey of a thousand miles begins with a single step" ~ Lao Tzu

---

From: PETERSON, CLINTON D. <cdpeterson@santafenm.gov>
Sent: Monday, August 4, 2025 4:28 PM
To: Purchasing DET <purchasing_det@santafenm.gov>
Subject: Determination Request for Construction Services

Hello,

I need a determination request for Construction Services for the Canyon Road Water Treatment Plant, which would include:

- Demolition of existing flocculation and sedimentation equipment
- Installation of new PLC controls, new vertical flocculation paddlewheels, new concrete work for existing sedimentation basins, new yard piping and electrical conduits, electrical work, and new plate settlers
- Construction of a new motor control building for the vertical paddlewheels.

Clinton Peterson, P.E.
Engineer, Water Division
City of Santa Fe
Phone: 505-955-4369

ACORD

CERTIFICATE OF LIABILITY INSURANCE

DATE (MM/DD/YYYY) 7/23/2025

THIS CERTIFICATE IS ISSUED AS A MATTER OF INFORMATION ONLY AND CONFERS NO RIGHTS UPON THE CERTIFICATE HOLDER. THIS CERTIFICATE DOES NOT AFFIRMATIVELY OR NEGATIVELY AMEND, EXTEND OR ALTER THE COVERAGE AFFORDED BY THE POLICIES BELOW. THIS CERTIFICATE OF INSURANCE DOES NOT CONSTITUTE A CONTRACT BETWEEN THE ISSUING INSURER(S), AUTHORIZED REPRESENTATIVE OR PRODUCER, AND THE CERTIFICATE HOLDER.

IMPORTANT: If the certificate holder is an ADDITIONAL INSURED, the policy(ies) must have ADDITIONAL INSURED provisions or be endorsed. If SUBROGATION IS WAIVED, subject to the terms and conditions of the policy, certain policies may require an endorsement. A statement on this certificate does not confer rights to the certificate holder in lieu of such endorsement(s).

PRODUCER License # 0757776 HUB International Insurance Services (SOW) 6565 Americas Parkway Suite 720 Albuquerque, NM 87110	CONTACT NAME: Carrie Butler PHONE (A/C, No, Ext): (505) 262-9412 9412 FAX (A/C, No): (866) 487-3972 E-MAIL ADDRESS: Carrie.Butler@hubinternational.com
	INSURER(S) AFFORDING COVERAGE — NAIC #
	INSURER A : Zurich American Insurance Company — 16535
INSURED Bradbury Stamm Construction, Inc. 7110 2nd St NW Albuquerque, NM 87107	INSURER B : Allied World Insurance Company — 22730
	INSURER C :
	INSURER D :
	INSURER E :
	INSURER F :

COVERAGES **CERTIFICATE NUMBER:** **REVISION NUMBER:**

THIS IS TO CERTIFY THAT THE POLICIES OF INSURANCE LISTED BELOW HAVE BEEN ISSUED TO THE INSURED NAMED ABOVE FOR THE POLICY PERIOD INDICATED. NOTWITHSTANDING ANY REQUIREMENT, TERM OR CONDITION OF ANY CONTRACT OR OTHER DOCUMENT WITH RESPECT TO WHICH THIS CERTIFICATE MAY BE ISSUED OR MAY PERTAIN, THE INSURANCE AFFORDED BY THE POLICIES DESCRIBED HEREIN IS SUBJECT TO ALL THE TERMS, EXCLUSIONS AND CONDITIONS OF SUCH POLICIES. LIMITS SHOWN MAY HAVE BEEN REDUCED BY PAID CLAIMS.

INSR LTR	TYPE OF INSURANCE	ADDL INSD	SUBR WVD	POLICY NUMBER	POLICY EFF (MM/DD/YYYY)	POLICY EXP (MM/DD/YYYY)	LIMITS	
A	X COMMERCIAL GENERAL LIABILITY CLAIMS-MADE X OCCUR GEN'L AGGREGATE LIMIT APPLIES PER: POLICY X PRO-JECT X LOC OTHER:	X	X	GLO 2927129 - 03	7/1/2025	7/1/2026	EACH OCCURRENCE DAMAGE TO RENTED PREMISES (Ea occurrence) MED EXP (Any one person) PERSONAL & ADV INJURY GENERAL AGGREGATE PRODUCTS - COMP/OP AGG	$ 2,000,000 $ 1,000,000 $ 10,000 $ 2,000,000 $ 4,000,000 $ 4,000,000
A	AUTOMOBILE LIABILITY X ANY AUTO OWNED AUTOS ONLY / SCHEDULED AUTOS HIRED AUTOS ONLY / NON-OWNED AUTOS ONLY	X	X	BAP 2927130-03	7/1/2025	7/1/2026	COMBINED SINGLE LIMIT (Ea accident) BODILY INJURY (Per person) BODILY INJURY (Per accident) PROPERTY DAMAGE (Per accident)	$ 5,000,000
B	X UMBRELLA LIAB X OCCUR EXCESS LIAB CLAIMS-MADE DED X RETENTION $ 10,000	X	X	0313-8176	7/1/2025	7/1/2026	EACH OCCURRENCE AGGREGATE Aggregate	$ 5,000,000 $ $ 5,000,000
A	WORKERS COMPENSATION AND EMPLOYERS' LIABILITY ANY PROPRIETOR/PARTNER/EXECUTIVE OFFICER/MEMBER EXCLUDED? (Mandatory in NH) Y/N: N If yes, describe under DESCRIPTION OF OPERATIONS below	N / A	X	WC 2927128-03	7/1/2025	7/1/2026	X PER STATUTE / OTH-ER E.L. EACH ACCIDENT E.L. DISEASE - EA EMPLOYEE E.L. DISEASE - POLICY LIMIT	$ 1,000,000 $ 1,000,000 $ 1,000,000

DESCRIPTION OF OPERATIONS / LOCATIONS / VEHICLES (ACORD 101, Additional Remarks Schedule, may be attached if more space is required)
Additional Insured, Primary Non--Contributory, Waiver of Subrogation and 30 Day Notice of Cancellation apply per attached policy forms.

Project: Santa Fe Canyon Road Flocculation and Sedimentation

CERTIFICATE HOLDER

Canyon Road Water Treatment Plant
1780 Upper Canyon Road
Santa Fe, NM 87501

CANCELLATION

SHOULD ANY OF THE ABOVE DESCRIBED POLICIES BE CANCELLED BEFORE THE EXPIRATION DATE THEREOF, NOTICE WILL BE DELIVERED IN ACCORDANCE WITH THE POLICY PROVISIONS.

AUTHORIZED REPRESENTATIVE

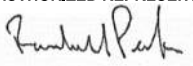

© 1988-2015 ACORD CORPORATION. All rights reserved.
The ACORD name and logo are registered marks of ACORD

ALTERNATE EMPLOYER ENDORSEMENT

This endorsement applies only with respect to bodily injury to your employees while in the course of special or temporary employment by the alternate employer in the state named in the Schedule. Part One (Workers Compensation Insurance) and Part Two (Employers Liability Insurance) will apply as though the alternate employer is insured.

Under Part One (Workers Compensation Insurance) we will reimburse the alternate employer for the benefits required by the workers compensation law if we are not permitted to pay the benefits directly to the persons entitled to them.

The insurance afforded by this endorsement is not intended to satisfy the alternate employer's duty to secure its obligations under the workers compensation law. We will not file evidence of this insurance on behalf of the alternate employer with any government agency.

We will not ask any other insurer of the alternate employer to share with us a loss covered by this endorsement.

Premium will be charged for your employees while in the course of special or temporary employment by the alternate employer.

The policy may be canceled according to its terms without sending notice to the alternate employer.

Part Four (Your Duties If Injury Occurs) applies to you and the alternate employer. The alternate employer will recognize our right to defend under Parts One and Two and our right to inspect under Part Six.

Schedule

Alternate Employer	Address	State of Special or Temporary Employment
Any person or organization to whom or to which you are required to add as an alternate employer in a written contract or written agreement executed prior to loss, except where such contract or agreement is prohibited by law		Any state listed in Item 3.A of the Information Page

This endorsement changes the policy to which it is attached and is effective on the date issued unless otherwise stated.

(The information below is required only when this endorsement is issued subsequent to preparation of the policy.)

Endorsement Effective 07/01/2024 Policy No. WC 2927128 - 02 Endorsement No.

Insured BRADBURY STAMM CONSTRUCTION, INC. Premium

Insurance Company Zurich American Insurance Company Countersigned by_____

Copyright 1984 National Council on Compensation Insurance.

Additional Insured – Automatic – Owners, Lessees Or Contractors

THIS ENDORSEMENT CHANGES THE POLICY. PLEASE READ IT CAREFULLY.	
Policy No. GLO 2927129 - 02	Effective Date: 07/01/2024

This endorsement modifies insurance provided under the:

Commercial General Liability Coverage Part

A. Section **II – Who Is An Insured** is amended to include as an additional insured any person or organization whom you are required to add as an additional insured under a written contract or written agreement executed by you, but only with respect to liability for "bodily injury", "property damage" or "personal and advertising injury" and subject to the following:

1. If such written contract or written agreement specifically requires that you provide that the person or organization be named as an additional insured under one or both of the following endorsements:

a. The Insurance Services Office (ISO) ISO CG 20 10 (10/01 edition); or

b. The ISO CG 20 37 (10/01 edition),

such person or organization is then an additional insured with respect to such endorsement(s), but only to the extent that "bodily injury", "property damage" or "personal and advertising injury" arises out of:

(1) Your ongoing operations, with respect to Paragraph **1.a.** above; or

(2) "Your work", with respect to Paragraph **1.b.** above,

which is the subject of the written contract or written agreement.

However, solely with respect to this Paragraph **1.**, insurance afforded to such additional insured:

(a) Only applies if the "bodily injury", "property damage" or "personal and advertising injury" offense occurs during the policy period and subsequent to your execution of the written contract or written agreement; and

(b) Does not apply to "bodily injury" or "property damage" caused by "your work" and included within the "products-completed operations hazard" unless the written contract or written agreement specifically requires that you provide such coverage to such additional insured.

2. If such written contract or written agreement specifically requires that you provide that the person or organization be named as an additional insured under one or both of the following endorsements:

a. The Insurance Services Office (ISO) ISO CG 20 10 (07/04 edition); or

b. The ISO CG 20 37 (07/04 edition),

such person or organization is then an additional insured with respect to such endorsement(s), but only to the extent that "bodily injury", "property damage" or "personal and advertising injury" is caused, in whole or in part, by:

(1) Your acts or omissions; or

(2) The acts or omissions of those acting on your behalf,

Includes copyrighted material of Insurance Services Office, Inc., with its permission.

in the performance of:

(a) Your ongoing operations, with respect to Paragraph **2.a.** above; or

(b) "Your work" and included in the "products-completed operations hazard", with respect to Paragraph **2.b.** above,

which is the subject of the written contract or written agreement.

However, solely with respect to this Paragraph **2.**, insurance afforded to such additional insured:

(i) Only applies if the "bodily injury", "property damage" or "personal and advertising injury" offense occurs during the policy period and subsequent to your execution of the written contract or written agreement; and

(ii) Does not apply to "bodily injury" or "property damage" caused by "your work" and included within the "products-completed operations hazard" unless the written contract or written agreement specifically requires that you provide such coverage to such additional insured.

3. If neither Paragraph **1.** nor Paragraph **2.** above apply and such written contract or written agreement requires that you provide that the person or organization be named as an additional insured:

a. Under the ISO CG 20 10 (04/13 edition, any subsequent edition or if no edition date is specified); or

b. With respect to ongoing operations (if no form is specified),

such person or organization is then an additional insured only to the extent that "bodily injury", "property damage" or "personal and advertising injury" is caused, in whole or in part by:

(1) Your acts or omissions; or

(2) The acts or omissions of those acting on your behalf,

in the performance of your ongoing operations, which is the subject of the written contract or written agreement.

However, solely with respect to this Paragraph **3.**, insurance afforded to such additional insured:

(a) Only applies to the extent permitted by law;

(b) Will not be broader than that which you are required by the written contract or written agreement to provide for such additional insured; and

(c) Only applies if the "bodily injury", "property damage" or "personal and advertising injury" offense occurs during the policy period and subsequent to your execution of the written contract or written agreement.

4. If neither Paragraph **1.** nor Paragraph **2.** above apply and such written contract or written agreement requires that you provide that the person or organization be named as an additional insured:

a. Under the ISO CG 20 37 (04/13 edition, any subsequent edition or if no edition date is specified); or

b. With respect to the "products-completed operations hazard" (if no form is specified),

such person or organization is then an additional insured only to the extent that "bodily injury" or "property damage" is caused, in whole or in part by "your work" and included in the "products-completed operations hazard", which is the subject of the written contract or written agreement.

However, solely with respect to this Paragraph **4.**, insurance afforded to such additional insured:

(1) Only applies to the extent permitted by law;

(2) Will not be broader than that which you are required by the written contract or written agreement to provide for such additional insured;

(3) Only applies if the "bodily injury" or "property damage" occurs during the policy period and subsequent to your execution of the written contract or written agreement; and

Includes copyrighted material of Insurance Services Office, Inc., with its permission.

(4) Does not apply to "bodily injury" or "property damage" caused by "your work" and included within the "products-completed operations hazard" unless the written contract or written agreement specifically requires that you provide such coverage to such additional insured.

B. Solely with respect to the insurance afforded to any additional insured referenced in Section **A.** of this endorsement, the following additional exclusion applies:

This insurance does not apply to "bodily injury", "property damage" or "personal and advertising injury" arising out of the rendering of, or failure to render, any professional architectural, engineering or surveying services including:

1. The preparing, approving or failing to prepare or approve maps, shop drawings, opinions, reports, surveys, field orders, change orders or drawings and specifications; or

2. Supervisory, inspection, architectural or engineering activities.

This exclusion applies even if the claims against any insured allege negligence or other wrongdoing in the supervision, hiring, employment, training or monitoring of others by that insured, if the "occurrence" which caused the "bodily injury" or "property damage", or the offense which caused the "personal and advertising injury", involved the rendering of or the failure to render any professional architectural, engineering or surveying services.

C. Solely with respect to the coverage provided by this endorsement, the following is added to Paragraph **2. Duties In The Event Of Occurrence, Offense, Claim Or Suit** of Section **IV – Commercial General Liability Conditions**:

The additional insured must see to it that:

(1) We are notified as soon as practicable of an "occurrence" or offense that may result in a claim;

(2) We receive written notice of a claim or "suit" as soon as practicable; and

(3) A request for defense and indemnity of the claim or "suit" will promptly be brought against any policy issued by another insurer under which the additional insured may be an insured in any capacity. This provision does not apply to insurance on which the additional insured is a Named Insured if the written contract or written agreement requires that this coverage be primary and non-contributory.

D. Solely with respect to the coverage provided by this endorsement:

1. The following is added to the **Other Insurance** Condition of Section **IV – Commercial General Liability Conditions**:

Primary and Noncontributory insurance

This insurance is primary to and will not seek contribution from any other insurance available to an additional insured provided that:

a. The additional insured is a Named Insured under such other insurance; and

b. You are required by written contract or written agreement that this insurance be primary and not seek contribution from any other insurance available to the additional insured.

2. The following paragraph is added to Paragraph **4.b.** of the **Other Insurance** Condition under Section **IV – Commercial General Liability Conditions**:

This insurance is excess over:

Any of the other insurance, whether primary, excess, contingent or on any other basis, available to an additional insured, in which the additional insured on our policy is also covered as an additional insured on another policy providing coverage for the same "occurrence", offense, claim or "suit". This provision does not apply to any policy in which the additional insured is a Named Insured on such other policy and where our policy is required by a written contract or written agreement to provide coverage to the additional insured on a primary and non-contributory basis.

E. This endorsement does not apply to an additional insured which has been added to this Coverage Part by an endorsement showing the additional insured in a Schedule of additional insureds, and which endorsement applies specifically to that identified additional insured.

Includes copyrighted material of Insurance Services Office, Inc., with its permission.

F. Solely with respect to the insurance afforded to an additional insured under Paragraph **A.3.** or Paragraph **A.4.** of this endorsement, the following is added to Section **III – Limits Of Insurance**:

Additional Insured – Automatic – Owners, Lessees Or Contractors Limit

The most we will pay on behalf of the additional insured is the amount of insurance:

1. Required by the written contract or written agreement referenced in Section **A.** of this endorsement; or

2. Available under the applicable Limits of Insurance shown in the Declarations,

whichever is less.

This endorsement shall not increase the applicable Limits of Insurance shown in the Declarations.

All other terms, conditions, provisions and exclusions of this policy remain the same.

Includes copyrighted material of Insurance Services Office, Inc., with its permission.

Blanket Notification to Others of Cancellation or Non-Renewal

THIS ENDORSEMENT CHANGES THE POLICY. PLEASE READ IT CAREFULLY.	
Policy No. GLO 2927129 - 02	Effective Date: 07/01/2024

This endorsement applies to insurance provided under the:

Commercial General Liability Coverage Part

A. If we cancel or non-renew this Coverage Part by written notice to the first Named Insured, we will mail or deliver notification that such Coverage Part has been cancelled or non-renewed to each person or organization shown in a list provided to us by the first Named Insured if you are required by written contact or written agreement to provide such notification. Such list:

1. Must be provided to us prior to cancellation or non-renewal;

2. Must contain the names and addresses of only the persons or organizations requiring notification that such Coverage Part has been cancelled or non-renewed; and

3. Must be in an electronic format that is acceptable to us.

B. Our notification as described in Paragraph **A.** of this endorsement will be based on the most recent list in our records as of the date the notice of cancellation or non-renewal is mailed or delivered to the first Named Insured. We will mail or deliver such notification to each person or organization shown in the list:

1. Within 10 days of the effective date of the notice of cancellation, if we cancel for non-payment of premium; or

2. At least 30 days prior to the effective date of:

a. Cancellation, if cancelled for any reason other than nonpayment of premium; or

b. Non-renewal, but not including conditional notice of renewal,

unless a greater number of days is shown in the Schedule of this endorsement for the mailing or delivering of such notification with respect to Paragraph **B.1.** or Paragraph **B.2.** above.

C. Our mailing or delivery of notification described in Paragraphs **A.** and **B.** of this endorsement is intended as a courtesy only. Our failure to provide such mailing or delivery will not:

1. Extend the Coverage Part cancellation or non-renewal date;

2. Negate the cancellation or non-renewal; or

3. Provide any additional insurance that would not have been provided in the absence of this endorsement.

Includes copyrighted material of Insurance Services Office, Inc., with its permission.

D. We are not responsible for the accuracy, integrity, timeliness and validity of information contained in the list provided to us as described in Paragraphs **A.** and **B.** of this endorsement.

SCHEDULE	
The total number of days for mailing or delivering with respect to Paragraph **B.1.** of this endorsement is amended to indicate the following number of days:	*
The total number of days for mailing or delivering with respect to Paragraph **B.2.** of this endorsement is amended to indicate the following number of days:	**
* If a number is not shown here, 10 days continues to apply. ** If a number is not shown here, 30 days continues to apply.	

All other terms and conditions of this policy remain unchanged.

Includes copyrighted material of Insurance Services Office, Inc., with its permission.

General Liability Supplemental Coverage Endorsement

THIS ENDORSEMENT CHANGES THE POLICY. PLEASE READ IT CAREFULLY.	
Policy No. GLO 2927129 - 02	Effective Date: 07/01/2024

This endorsement modifies insurance provided under the:

Commercial General Liability Coverage Part

The following changes apply to this Coverage Part. However, endorsements attached to this Coverage Part will supersede any provisions to the contrary in this General Liability Supplemental Coverage Endorsement.

A. Broadened Named Insured

1. The following is added to Section **II – Who Is An Insured**:

Any organization of yours, other than a partnership or joint venture, which is not shown in the Declarations, and over which you maintain an ownership interest of more than 50% of such organization as of the effective date of this Coverage Part, will qualify as a Named Insured. However, such organization will not qualify as a Named Insured under this provision if it:

a. Is newly acquired or formed during the policy period;

b. Is also an insured under another policy, other than a policy written to apply specifically in excess of this Coverage Part; or

c. Would be an insured under another policy but for its termination or the exhaustion of its limits of insurance.

Each such organization remains qualified as a Named Insured only while you maintain an ownership interest of more than 50% in the organization during the policy period.

2. The last paragraph of Section **II – Who Is An Insured** does not apply to this provision to the extent that such paragraph would conflict with this provision.

B. Newly Acquired or Formed Organizations as Named Insureds

1. Paragraph **3.** of Section **II – Who Is An Insured** is replaced by the following:

3. Any organization you newly acquire or form during the policy period, other than a partnership or joint venture, and over which you maintain an ownership interest of more than 50% of such organization, will qualify as a Named Insured if there is no other similar insurance available to that organization. However:

a. Coverage under this provision is afforded only until the 180th day after you acquire or form the organization or the end of the policy period, whichever is earlier;

b. Coverage **A** does not apply to "bodily injury" or "property damage" that occurred before you acquired or formed the organization; and

c. Coverage **B** does not apply to "personal and advertising injury" arising out of an offense committed before you acquired or formed the organization.

Includes copyrighted material of Insurance Services Office, Inc., with its permission.

An additional premium will apply in accordance with our rules and rates in effect on the date you acquired or formed the organization.

2. The last paragraph of Section **II – Who Is An Insured** does not apply to this provision to the extent that such paragraph would conflict with this provision.

C. Insured Status – Employees

Paragraph **2.a.(1)** of Section **II – Who Is An Insured** is replaced by the following:

2. Each of the following is also an insured:

a. Your "volunteer workers" only while performing duties related to the conduct of your business, or your "employees", other than either your "executive officers" (if you are an organization other than a partnership, joint venture or limited liability company) or your managers (if you are a limited liability company), but only for acts within the scope of their employment by you or while performing duties related to the conduct of your business. However, none of these "employees" or "volunteer workers" are insureds for:

(1) "Bodily injury" or "personal and advertising injury":

(a) To you, to your partners or members (if you are a partnership or joint venture), to your members (if you are a limited liability company), to a co-"employee" while in the course of his or her employment or performing duties related to the conduct of your business, or to your other "volunteer workers" while performing duties related to the conduct of your business;

(b) To the spouse, child, parent, brother or sister of that co-"employee" or "volunteer worker" as a consequence of Paragraph **(1)(a)** above;

(c) For which there is any obligation to share damages with or repay someone else who must pay damages because of the injury described in Paragraphs **(1)(a)** or **(b)** above; or

(d) Arising out of his or her providing or failing to provide professional health care services.

However:

Paragraphs **(1)(a)** and **(1)(d)** do not apply to your "employees" or "volunteer workers", who are not employed by you or volunteering for you as health care professionals, for "bodily injury" arising out of "Good Samaritan Acts" while the "employee" or "volunteer worker" is performing duties related to the conduct of your business.

"Good Samaritan Acts" mean any assistance of a medical nature rendered or provided in an emergency situation for which no remuneration is demanded or received.

Paragraphs **(1)(a), (b)** and **(c)** do not apply to any "employee" designated as a supervisor or higher in rank, with respect to "bodily injury" to co-"employees". As used in this provision, "employees" designated as a supervisor or higher in rank means only "employees" who are authorized by you to exercise direct or indirect supervision or control over "employees" or "volunteer workers" and the manner in which work is performed.

D. Additional Insureds – Lessees of Premises

1. Section **II – Who Is An Insured** is amended to include as an additional insured any person(s) or organization(s) who leases or rents a part of the premises you own or manage who you are required to add as an additional insured on this policy under a written contract or written agreement, but only with respect to liability arising out of your ownership, maintenance or repair of that part of the premises which is not reserved for the exclusive use or occupancy of such person or organization or any other tenant or lessee.

This provision does not apply after the person or organization ceases to lease or rent premises from you.

However, the insurance afforded to such additional insured:

a. Only applies to the extent permitted by law; and

b. Will not be broader than that which you are required by the written contract or written agreement to provide for such additional insured.

2. With respect to the insurance afforded to the additional insureds under this endorsement, the following is added to Section **III – Limits Of Insurance**:

Includes copyrighted material of Insurance Services Office, Inc., with its permission.

The most we will pay on behalf of the additional insured is the amount of insurance:

a. Required by the written contract or written agreement referenced in Subparagraph **D.1.** above (of this endorsement); or

b. Available under the applicable Limits of Insurance shown in the Declarations,

whichever is less.

This Paragraph **D.** shall not increase the applicable Limits of Insurance shown in the Declarations.

E. Additional Insured – Vendors

1. The following change applies if this Coverage Part provides insurance to you for "bodily injury" and "property damage" included in the "products-completed operations hazard":

Section **II – Who Is An Insured** is amended to include as an additional insured any person or organization (referred to throughout this Paragraph **E.** as vendor) who you have agreed in a written contract or written agreement, prior to loss, to name as an additional insured, but only with respect to "bodily injury" or "property damage" arising out of "your products" which are distributed or sold in the regular course of the vendor's business:

However, the insurance afforded to such vendor:

a. Only applies to the extent permitted by law; and

b. Will not be broader than that which you are required by the written contract or written agreement to provide for such vendor.

2. With respect to the insurance afforded to these vendors, the following additional exclusions apply:

a. The insurance afforded the vendor does not apply to:

(1) "Bodily injury" or "property damage" for which the vendor is obligated to pay damages by reason of the assumption of liability in a contract or agreement. This exclusion does not apply to liability for damages that the vendor would have in the absence of the contract or agreement;

(2) Any express warranty unauthorized by you;

(3) Any physical or chemical change in the product made intentionally by the vendor;

(4) Repackaging, except when unpacked solely for the purpose of inspection, demonstration, testing, or the substitution of parts under instructions from the manufacturer, and then repackaged in the original container;

(5) Any failure to make such inspections, adjustments, tests or servicing as the vendor has agreed to make or normally undertakes to make in the usual course of business, in connection with the distribution or sale of the products;

(6) Demonstration, installation, servicing or repair operations, except such operations performed at the vendor's premises in connection with the sale of the product;

(7) Products which, after distribution or sale by you, have been labeled or relabeled or used as a container, part or ingredient of any other thing or substance by or for the vendor; or

(8) "Bodily injury" or "property damage" arising out of the sole negligence of the vendor for its own acts or omissions or those of its employees or anyone else acting on its behalf. However, this exclusion does not apply to:

(a) The exceptions contained in Subparagraphs **(4)** or **(6)**; or

(b) Such inspections, adjustments, tests or servicing as the vendor has agreed to make or normally undertakes to make in the usual course of business, in connection with the distribution or sale of the products.

b. This insurance does not apply to any insured person or organization, from whom you have acquired such products, or any ingredient, part or container, entering into, accompanying or containing such products.

Includes copyrighted material of Insurance Services Office, Inc., with its permission.

c. This insurance does not apply to any of "your products" for which coverage is excluded under this Coverage Part.

3. With respect to the insurance afforded to the vendor under this endorsement, the following is added to Section **III – Limits Of Insurance**:

The most we will pay on behalf of the vendor is the amount of insurance:

a. Required by the written contract or written agreement referenced in Subparagraph **E.1.** above (of this endorsement); or

b. Available under the applicable Limits of Insurance shown in the Declarations,

whichever is less.

This Paragraph **E.** shall not increase the applicable Limits of Insurance shown in the Declarations.

F. Additional Insured – Managers, Lessors or Governmental Entity

1. Section **II – Who Is An Insured** is amended to include as an insured any person or organization who is a manager, lessor or governmental entity who you are required to add as an additional insured on this policy under a written contract, written agreement or permit, but only with respect to liability for "bodily injury", "property damage" or "personal and advertising injury" caused, in whole or in part, by:

a. Your acts or omissions; or

b. The acts or omission of those acting on your behalf; and

resulting directly from:

a. Operations performed by you or on your behalf for which the state or political subdivision has issued a permit;

b. Ownership, maintenance, occupancy or use of premises by you; or

c. Maintenance, operation or use by you of equipment leased to you by such person or organization.

However, the insurance afforded to such additional insured:

a. Only applies to the extent permitted by law; and

b. Will not be broader than that which you are required by the written contract or written agreement to provide for such additional insured.

2. This provision does not apply:

a. Unless the written contract or written agreement has been executed, or the permit has been issued, prior to the "bodily injury", "property damage" or offense that caused "personal and advertising injury";

b. To any person or organization included as an insured under Paragraph **3.** of Section **II – Who Is An Insured**;

c. To any lessor of equipment if the "occurrence" or offense takes place after the equipment lease expires;

d. To any:

(1) Owners or other interests from whom land has been leased by you; or

(2) Managers or lessors of premises, if:

(a) The "occurrence" or offense takes place after the expiration of the lease or you cease to be a tenant in that premises;

(b) The "bodily injury", "property damage" or "personal and advertising injury" arises out of the structural alterations, new construction or demolition operations performed by or on behalf of the manager or lessor; or

(c) The premises are excluded under this Coverage Part.

3. With respect to the insurance afforded to the additional insureds under this endorsement, the following is added to Section **III – Limits Of Insurance**:

The most we will pay on behalf of the additional insured is the amount of insurance:

Includes copyrighted material of Insurance Services Office, Inc., with its permission.

a. Required by the written contract or written agreement referenced in Subparagraph **F.1.** above (of this endorsement); or

b. Available under the applicable Limits of Insurance shown in the Declarations,

whichever is less.

This Paragraph **F.** shall not increase the applicable Limits of Insurance shown in the Declarations.

G. Damage to Premises Rented or Occupied by You

1. The last paragraph under Paragraph **2. Exclusions** of Section **I – Coverage A – Bodily Injury And Property Damage Liability** is replaced by the following:

Exclusions **c.** through **n.** do not apply to damage by "specific perils" to premises while rented to you or temporarily occupied by you with permission of the owner. A separate Damage To Premises Rented To You Limit of Insurance applies to this coverage as described in Section **III – Limits Of Insurance.**

2. Paragraph **6.** of Section **III – Limits Of Insurance** is replaced by the following:

6. Subject to Paragraph **5.** above, the Damage To Premises Rented To You Limit is the most we will pay under Coverage **A** for damages because of "property damage" to any one premises while rented to you, or in the case of damage by one or more "specific perils" to any one premises, while rented to you or temporarily occupied by you with permission of the owner.

H. Broadened Contractual Liability

The "insured contract" definition under the **Definitions** Section is replaced by the following:

"Insured contract" means:

a. A contract for a lease of premises. However, that portion of the contract for a lease of premises that indemnifies any person or organization for damage by "specific perils" to premises while rented to you or temporarily occupied by you with permission of the owner is not an "insured contract";

b. A sidetrack agreement;

c. Any easement or license agreement;

d. An obligation, as required by ordinance, to indemnify a municipality, except in connection with work for a municipality;

e. An elevator maintenance agreement;

f. That part of any other contract or agreement pertaining to your business (including an indemnification of a municipality in connection with work performed for a municipality) under which you assume the tort liability of another party to pay for "bodily injury", "property damage", or "personal and advertising injury" arising out of the offenses of false arrest, detention or imprisonment, to a third person or organization. Tort liability means a liability that would be imposed by law in the absence of any contract or agreement.

Paragraph **f.** does not include that part of any contract or agreement:

(1) That indemnifies an architect, engineer or surveyor for injury or damage arising out of:

(a) Preparing, approving, or failing to prepare or approve, maps, shop drawings, opinions, reports, surveys, field orders, change orders or drawings and specifications; or

(b) Giving directions or instructions, or failing to give them, if that is the primary cause of the injury or damage; or

(2) Under which the insured, if an architect, engineer or surveyor, assumes liability for an injury or damage arising out of the insured's rendering or failure to render professional services, including those listed in Paragraph **(1)** above and supervisory, inspection, architectural or engineering activities.

I. Definition – Specific Perils

The following definition is added to the **Definitions** Section:

"Specific perils" means:

Includes copyrighted material of Insurance Services Office, Inc., with its permission.

a. Fire;

b. Lightning;

c. Explosion;

d. Windstorm or hail;

e. Smoke;

f. Aircraft or vehicles;

g. Vandalism;

h. Weight of snow, ice or sleet;

i. Leakage from fire extinguishing equipment, including sprinklers; or

j. Accidental discharge or leakage of water or steam from any part of a system or appliance containing water or steam.

J. Limited Contractual Liability Coverage – Personal and Advertising Injury

1. Exclusion **e.** of Section **I – Coverage B – Personal And Advertising Injury Liability** is replaced by the following:

2. Exclusions

This insurance does not apply to:

e. Contractual Liability

"Personal and advertising injury" for which the insured has assumed liability in a contract or agreement.

This exclusion does not apply to:

(1) Liability for damages that the insured would have in the absence of the contract or agreement; or

(2) Liability for "personal and advertising injury" if:

(a) The "personal and advertising injury" arises out of the offenses of false arrest, detention or imprisonment;

(b) The liability pertains to your business and is assumed in a written contract or written agreement in which you assume the tort liability of another. Tort liability means a liability that would be imposed by law in the absence of any contract or agreement; and

(c) The "personal and advertising injury" occurs subsequent to the execution of the written contract or written agreement.

Solely for purposes of liability so assumed in such written contract or written agreement, reasonable attorney fees and necessary litigation expenses incurred by or for a party other than an insured are deemed to be damages because of "personal and advertising injury" described in Paragraph **(a)** above, provided:

(i) Liability to such party for, or for the cost of, that party's defense has also been assumed in the same written contract or written agreement; and

(ii) Such attorney fees and litigation expenses are for defense of that party against a civil or alternative dispute resolution proceeding in which damages to which this insurance applies are alleged.

2. Paragraph **2.d.** of Section **I – Supplementary Payments – Coverages A and B** is replaced by the following:

d. The allegations in the "suit" and the information we know about the "occurrence" or offense are such that no conflict appears to exist between the interests of the insured and the interests of the indemnitee;

3. The following is added to the paragraph directly following Paragraph **2.f.** of Section **I – Supplementary Payments – Coverages A and B**:

Notwithstanding the provisions of Paragraph **2.e.(2)** of Section **I – Coverage B – Personal And Advertising Injury Liability**, such payments will not be deemed to be damages for "personal and advertising injury" and will not reduce the limits of insurance.

Includes copyrighted material of Insurance Services Office, Inc., with its permission.

K. Supplementary Payments

The following changes apply to **Supplementary Payments – Coverages A and B**:

Paragraphs **1.b.** and **1.d.** are replaced by the following:

b. Up to $2,500 for the cost of bail bonds required because of accidents or traffic law violations arising out of the use of any vehicle to which the Bodily Injury Liability Coverage applies. We do not have to furnish these bonds.

d. All reasonable expenses incurred by the insured at our request to assist us in the investigation or defense of the claim or "suit", including actual loss of earnings up to $500 a day because of time off from work.

L. Broadened Property Damage

1. Property Damage to Contents of Premises Rented Short-Term

The paragraph directly following Paragraph **(6)** in Exclusion **j.** of Section **I – Coverage A – Bodily Injury And Property Damage Liability** is replaced by the following:

Paragraphs **(1)**, **(3)** and **(4)** of this exclusion do not apply to "property damage" to premises (other than damage by "specific perils"), including "property damage" to the contents of such premises, rented to you under a rental agreement for a period of 14 or fewer consecutive days. A separate Limit of Insurance applies to Damage to Premises Rented to You as described in Section **III – Limits Of Insurance.**

2. Elevator Property Damage

a. The following is added to Exclusion **j.** of Section **I – Coverage A – Bodily Injury And Property Damage Liability**:

Paragraphs **(3)** and **(4)** of this exclusion do not apply to "property damage" arising out of the use of an elevator at premises you own, rent or occupy.

b. The following is added to Section **III – Limits Of Insurance**:

Subject to Paragraph **5.** above, the most we will pay under Coverage **A** for damages because of "property damage" to property loaned to you or personal property in the care, custody or control of the insured arising out of the use of an elevator at premises you own, rent or occupy is $25,000 per "occurrence".

3. Property Damage to Borrowed Equipment

a. The following is added to Exclusion **j.** of Section **I – Coverage A – Bodily Injury And Property Damage Liability**:

Paragraph **(4)** of this exclusion does not apply to "property damage" to equipment you borrow from others at a jobsite.

b. The following is added to Section **III – Limits Of Insurance**:

Subject to Paragraph **5.** above, the most we will pay under Coverage **A** for damages because of "property damage" to equipment you borrow from others is $25,000 per "occurrence".

M. Expected or Intended Injury or Damage

Exclusion **a.** of Section **I – Coverage A – Bodily Injury And Property Damage Liability** is replaced by the following:

a. Expected Or Intended Injury Or Damage

"Bodily injury" or "property damage" expected or intended from the standpoint of the insured. This exclusion does not apply to "bodily injury" or "property damage" resulting from the use of reasonable force to protect persons or property.

N. Definitions – Bodily Injury

The "bodily injury" definition under the **Definitions** Section is replaced by the following:

"Bodily injury" means bodily injury, sickness or disease sustained by a person, including mental anguish, mental injury, shock, fright or death sustained by that person which results from that bodily injury, sickness or disease.

Includes copyrighted material of Insurance Services Office, Inc., with its permission.

O. Insured Status – Amateur Athletic Participants

Section **II – Who Is An Insured** is amended to include as an insured any person you sponsor while participating in amateur athletic activities. However, no such person is an insured for:

a. "Bodily injury" to:

(1) Your "employee", "volunteer worker" or any person you sponsor while participating in such amateur athletic activities; or

(2) You, any partner or member (if you are a partnership or joint venture), or any member (if you are a limited liability company) while participating in such amateur athletic activities; or

b. "Property damage" to property owned by, occupied or used by, rented to, in the care, custody or control of, or over which the physical control is being exercised for any purpose by:

(1) Your "employee", "volunteer worker" or any person you sponsor; or

(2) You, any partner or member (if you are a partnership or joint venture), or any member (if you are a limited liability company).

P. Non-Owned Aircraft, Auto and Watercraft

Exclusion **g.** of Section **I – Coverage A – Bodily Injury And Property Damage Liability** is replaced by the following:

g. Aircraft, Auto Or Watercraft

"Bodily injury" or "property damage" arising out of the ownership, maintenance, use or entrustment to others of any aircraft, "auto" or watercraft owned or operated by or rented or loaned to any insured. Use includes operation and "loading or unloading".

This exclusion applies even if the claims against any insured allege negligence or other wrongdoing in the supervision, hiring, employment, training or monitoring of others by that insured, if the "occurrence" which caused the "bodily injury" or "property damage" involved the ownership, maintenance, use or entrustment to others of any aircraft, "auto" or watercraft that is owned or operated by or rented or loaned to any insured.

This exclusion does not apply to:

(1) A watercraft while ashore on premises you own or rent;

(2) A watercraft you do not own that is:

(a) Less than 51 feet long; and

(b) Not being used to carry persons for a charge;

(3) Parking an "auto" on, or on the ways next to, premises you own or rent, provided the "auto" is not owned by or rented or loaned to you or the insured;

(4) Liability assumed under any "insured contract" for the ownership, maintenance or use of aircraft or watercraft;

(5) An aircraft that is hired or chartered by you or loaned to you, with a paid and licensed crew, and is not owned in whole or in part by an insured; or

(6) "Bodily injury" or "property damage" arising out of:

(a) The operation of machinery or equipment that is attached to, or part of, a land vehicle that would qualify under the definition of "mobile equipment" if it were not subject to a compulsory or financial responsibility law or other motor vehicle insurance law where it is licensed or principally garaged; or

(b) The operation of any of the machinery or equipment listed in Paragraph **f.(2)** or **f.(3)** of the definition of "mobile equipment".

Q. Definitions – Leased Worker, Temporary Worker and Labor Leasing Firm

1. The "leased worker" and "temporary worker" definitions under the **Definitions** Section are replaced by the following:

"Leased worker" means a person leased to you by a "labor leasing firm" under a written agreement between you and the "labor leasing firm", to perform duties related to the conduct of your business. "Leased worker" does not include a "temporary worker".

Includes copyrighted material of Insurance Services Office, Inc., with its permission.

"Temporary worker" means a person who is furnished to you to support or supplement your work force during "employee" absences, temporary skill shortages, upturns or downturns in business or to meet seasonal or short-term workload conditions. "Temporary worker" does not include a "leased worker".

2. The following definition is added to the **Definitions** Section:

"Labor leasing firm" means any person or organization who hires out workers to others, including any:

a. Employment agency, contractor or services;

b. Professional employer organization; or

c. Temporary help service.

R. Definition – Mobile Equipment

Paragraph **f.** of the "mobile equipment" definition under the **Definitions** Section is replaced by the following:

f. Vehicles not described in Paragraph **a.**, **b.**, **c.** or **d.** above maintained primarily for purposes other than the transportation of persons or cargo.

However, self-propelled vehicles with the following types of permanently attached equipment, exceeding a combined gross vehicle weight of 1000 pounds, are not "mobile equipment" but will be considered "autos":

(1) Equipment designed primarily for:

(a) Snow removal;

(b) Road maintenance, but not construction or resurfacing; or

(c) Street cleaning;

(2) Cherry pickers and similar devices mounted on automobile or truck chassis and used to raise or lower workers; and

(3) Air compressors, pumps and generators, including spraying, welding, building cleaning, geophysical exploration, lighting and well servicing equipment.

S. Definitions – Your Product and Your Work

The "your product" and "your work" definitions under the **Definitions** Section are replaced by the following:

"Your product":

a. Means:

(1) Any goods or products, other than real property, manufactured, sold, handled, distributed or disposed of by:

(a) You;

(b) Others trading under your name; or

(c) A person or organization whose business or assets you have acquired; and

(2) Containers (other than vehicles), materials, parts or equipment furnished in connection with such goods or products.

b. Includes:

(1) Warranties or representations made at any time with respect to the fitness, quality, durability, performance, use, handling, maintenance, operation or safety of "your product"; and

(2) The providing of or failure to provide warnings or instructions.

c. Does not include vending machines or other property rented to or located for the use of others but not sold.

"Your work":

a. Means:

(1) Work, services or operations performed by you or on your behalf; and

Includes copyrighted material of Insurance Services Office, Inc., with its permission.

(2) Materials, parts or equipment furnished in connection with such work, services or operations.

b. Includes:

(1) Warranties or representations made at any time with respect to the fitness, quality, durability, performance, use, handling, maintenance, operation or safety of "your work"; and

(2) The providing of or failure to provide warnings or instructions.

T. Duties in the Event of Occurrence, Offense, Claim or Suit Condition

The following paragraphs are added to Paragraph **2. Duties In The Event Of Occurrence, Offense, Claim Or Suit** of Section **IV – Commercial General Liability Conditions**:

Notice of an "occurrence" or of an offense which may result in a claim under this insurance or notice of a claim or "suit" shall be given to us as soon as practicable after knowledge of the "occurrence", offense, claim or "suit" has been reported to any insured listed under Paragraph **1.** of Section **II – Who Is An Insured** or an "employee" authorized by you to give or receive such notice. Knowledge by other "employees" of an "occurrence", offense, claim or "suit" does not imply that you also have such knowledge.

In the event that an insured reports an "occurrence" to the workers compensation carrier of the Named Insured and this "occurrence" later develops into a General Liability claim, covered by this Coverage Part, the insured's failure to report such "occurrence" to us at the time of the "occurrence" shall not be deemed to be a violation of this Condition. You must, however, give us notice as soon as practicable after being made aware that the particular claim is a General Liability rather than a Workers Compensation claim.

U. Other Insurance Condition

Paragraphs **4.a.** and **4.b.(1)** of the Other Insurance Condition of Section **IV – Commercial General Liability Conditions** are replaced by the following:

4. Other Insurance

If other valid and collectible insurance is available to the insured for a loss we cover under Coverages **A** or **B** of this Coverage Part, our obligations are limited as follows:

a. Primary Insurance

This insurance is primary except when Paragraph **b.** below applies. If this insurance is primary, our obligations are not affected unless any of the other insurance is also primary. Then, we will share with all that other insurance by the method described in Paragraph **c.** below. However, this insurance is primary to and will not seek contribution from any other insurance available to an additional insured provided that:

(1) The additional insured is a Named Insured under such other insurance; and

(2) You are required by written contract or written agreement that this insurance be primary and not seek contribution from any other insurance available to the additional insured.

Other insurance includes any type of self insurance or other mechanism by which an insured arranges for funding of its legal liabilities.

b. Excess Insurance

(1) This insurance is excess over:

(a) Any of the other insurance, whether primary, excess, contingent or on any other basis:

(i) That is property insurance, Builder's Risk, Installation Risk or similar coverage for "your work";

(ii) That is property insurance purchased by you (including any deductible or self insurance portion thereof) to cover premises rented to you or temporarily occupied by you with permission of the owner;

(iii) That is insurance purchased by you (including any deductible or self insurance portion thereof) to cover your liability as a tenant for "property damage" to premises rented to you or temporarily occupied by you with permission of the owner;

Includes copyrighted material of Insurance Services Office, Inc., with its permission.

(iv) If the loss arises out of the maintenance or use of aircraft, "autos" or watercraft to the extent not subject to Exclusion **g.** of Section **I – Coverage A – Bodily Injury And Property Damage Liability**; or

(v) That is property insurance (including any deductible or self insurance portion thereof) purchased by you to cover damage to:

Equipment you borrow from others; or

Property loaned to you or personal property in the care, custody or control of the insured arising out of the use of an elevator at premises you own, rent or occupy.

(b) Any other primary insurance (including any deductible or self insurance portion thereof) available to the insured covering liability for damages arising out of the premises, operations, products, work or services for which the insured has been granted additional insured status either by policy provision or attachment of any endorsement. Other primary insurance includes any type of self insurance or other mechanism by which an insured arranges for funding of its legal liabilities.

(c) Any of the other insurance, whether primary, excess, contingent or on any other basis, available to an additional insured, in which the additional insured on our policy is also covered as an additional insured on another policy providing coverage for the same "occurrence", claim or "suit". This provision does not apply to any policy in which the additional insured is a Named Insured on such other policy and where our policy is required by written contract or written agreement to provide coverage to the additional insured on a primary and non-contributory basis.

V. Unintentional Failure to Disclose All Hazards

Paragraph **6. Representations** of Section **IV – Commercial General Liability Conditions** is replaced by the following:

6. Representations

By accepting this policy, you agree:

a. The statements in the Declarations are accurate and complete;

b. Those statements are based upon representations you made to us; and

c. We have issued this policy in reliance upon your representations.

Coverage will continue to apply if you unintentionally:

a. Fail to disclose all hazards existing at the inception of this policy; or

b. Make an error, omission or improper description of premises or other statement of information stated in this policy.

You must notify us as soon as possible after the discovery of any hazards or any other information that was not provided to us prior to inception of this Coverage Part.

W. Waiver of Right of Subrogation

Paragraph **8. Transfer Of Rights Of Recovery Against Others To Us** of Section **IV – Commercial General Liability Conditions** is replaced by the following:

8. Transfer Of Rights Of Recovery Against Others To Us

a. If the insured has rights to recover all or part of any payment we have made under this Coverage Part, those rights are transferred to us. The insured must do nothing after loss to impair them. At our request, the insured will bring "suit" or transfer those rights to us and help us enforce them.

b. If the insured waives its right to recover payments for injury or damage from another person or organization in a written contract executed prior to a loss, we waive any right of recovery we may have against such person or organization because of any payment we have made under this Coverage Part. The written contract will be considered executed when the insured's performance begins, or when it is signed, whichever happens first. This waiver of rights shall not be construed to be a waiver with respect to any other operations in which the insured has no contractual interest.

X. Liberalization Condition

Includes copyrighted material of Insurance Services Office, Inc., with its permission.

The following condition is added to Section **IV – Commercial General Liability Conditions**:

Liberalization Clause

If we revise this Coverage Part to broaden coverage without an additional premium charge, your policy will automatically provide the additional coverage as of the day the revision is effective in the state shown in the mailing address of your policy.

All other terms, conditions, provisions and exclusions of this policy remain the same.

Includes copyrighted material of Insurance Services Office, Inc., with its permission.

Blanket Notification to Others of Cancellation or Non-Renewal

THIS ENDORSEMENT CHANGES THE POLICY. PLEASE READ IT CAREFULLY.	
Policy No. BAP 2927130 - 02	Effective Date: 07/01/2024

This endorsement modifies insurance provided under the:

Commercial Automobile Coverage Part

SCHEDULE	
The total number of days for mailing or delivering with respect to Paragraph **B.1.** of this endorsement is amended to indicate the following number of days:	*
The total number of days for mailing or delivering with respect to Paragraph **B.2.** of this endorsement is amended to indicate the following number of days:	**
* If a number is not shown here, 10 days continues to apply. ** If a number is not shown here, 30 days continues to apply.	

A. If we cancel or non-renew this Coverage Part by written notice to the first Named Insured, we will mail or deliver notification that such Coverage Part has been cancelled or non-renewed to each person or organization shown in a list provided to us by the first Named Insured if you are required by written contract or written agreement to provide such notification. However, such notification will not be mailed or delivered if a conditional notice of renewal has been sent to the first Named Insured. Such list:

1. Must be provided to us prior to cancellation or non-renewal;

2. Must contain the names and addresses of only the persons or organizations requiring notification that such Coverage Part has been cancelled or non-renewed; and

3. Must be in an electronic format that is acceptable to us.

B. Our notification as described in Paragraph **A.** of this endorsement will be based on the most recent list in our records as of the date the notice of cancellation or non-renewal is mailed or delivered to the first Named Insured. We will mail or deliver such notification to each person or organization shown in the list:

1. Within 10 days of the effective date of the notice of cancellation, if we cancel for non-payment of premium; or

2. At least 30 days prior to the effective date of:

a. Cancellation, if cancelled for any reason other than nonpayment of premium; or

b. Non-renewal, but not including conditional notice of renewal,

unless a greater number of days is shown in the Schedule of this endorsement for the mailing or delivering of such notification with respect to Paragraph **B.1.** or Paragraph **B.2.** above.

C. Our mailing or delivery of notification described in Paragraphs **A.** and **B.** of this endorsement is intended as a courtesy only. Our failure to provide such mailing or delivery will not:

1. Extend the Coverage Part cancellation or non-renewal date;

2. Negate the cancellation or non-renewal; or

3. Provide any additional insurance that would not have been provided in the absence of this endorsement.

Includes copyrighted material of Insurance Services Office, Inc., with its permission.

D. We are not responsible for the accuracy, integrity, timeliness and validity of information contained in the list provided to us as described in Paragraphs **A.** and **B.** of this endorsement.

All other terms, conditions, provisions and exclusions of this policy remain the same.

Includes copyrighted material of Insurance Services Office, Inc., with its permission.

Coverage Extension Endorsement

THIS ENDORSEMENT CHANGES THE POLICY. PLEASE READ IT CAREFULLY.	
Policy No. BAP 2927130 - 02	Effective Date: 07/01/2024

This endorsement modifies insurance provided under the:

Business Auto Coverage Form
Motor Carrier Coverage Form

A. Amended Who Is An Insured

1. The following is added to the **Who Is An Insured** Provision in **Section II – Covered Autos Liability Coverage**:

The following are also "insureds":

a. Any "employee" of yours is an "insured" while using a covered "auto" you don't own, hire or borrow for acts performed within the scope of employment by you. Any “employee” of yours is also an “insured” while operating an “auto” hired or rented under a contract or agreement in an “employee’s” name, with your permission, while performing duties related to the conduct of your business.

b. Anyone volunteering services to you is an "insured" while using a covered "auto" you don’t own, hire or borrow to transport your clients or other persons in activities necessary to your business.

c. Anyone else who furnishes an "auto" referenced in Paragraphs **A.1.a.** and **A.1.b.** in this endorsement.

d. Where and to the extent permitted by law, any person(s) or organization(s) where required by written contract or written agreement with you executed prior to any "accident", including those person(s) or organization(s) directing your work pursuant to such written contract or written agreement with you, provided the "accident" arises out of operations governed by such contract or agreement and only up to the limits required in the written contract or written agreement, or the Limits of Insurance shown in the Declarations, whichever is less.

2. The following is added to the **Other Insurance** Condition in the Business Auto Coverage Form and the **Other Insurance – Primary and Excess Insurance Provisions Condition** in the Motor Carrier Coverage Form**:**

Coverage for any person(s) or organization(s), where required by written contract or written agreement with you executed prior to any "accident", will apply on a primary and non-contributory basis and any insurance maintained by the additional "insured" will apply on an excess basis. However, in no event will this coverage extend beyond the terms and conditions of the Coverage Form.

B. Amendment – Supplementary Payments

Paragraphs **a.(2)** and **a.(4)** of the **Coverage Extensions** Provision in **Section II – Covered Autos Liability Coverage** are replaced by the following:

(2) Up to $5,000 for the cost of bail bonds (including bonds for related traffic law violations) required because of an "accident" we cover. We do not have to furnish these bonds.

(4) All reasonable expenses incurred by the "insured" at our request, including actual loss of earnings up to $500 a day because of time off from work.

C. Fellow Employee Coverage

The **Fellow Employee** Exclusion contained in **Section II – Covered Autos Liability Coverage** does not apply.

Includes copyrighted material of Insurance Services Office, Inc., with its permission.

D. Driver Safety Program Liability and Physical Damage Coverage

1. The following is added to the **Racing** Exclusion in **Section II – Covered Autos Liability Coverage**:

This exclusion does not apply to covered "autos" participating in a driver safety program event, such as, but not limited to, auto or truck rodeos and other auto or truck agility demonstrations.

2. The following is added to Paragraph **2.** in **B. Exclusions** of **Section III – Physical Damage Coverage** of the Business Auto Coverage Form and Paragraph **2.b.** in **B. Exclusions** of **Section IV – Physical Damage Coverage** of the Motor Carrier Coverage Form:

This exclusion does not apply to covered "autos" participating in a driver safety program event, such as, but not limited to, auto or truck rodeos and other auto or truck agility demonstrations.

E. Lease or Loan Gap Coverage

The following is added to the **Coverage** Provision of the **Physical Damage Coverage** Section:

Lease Or Loan Gap Coverage

In the event of a total "loss" to a covered "auto", we will pay any unpaid amount due on the lease or loan for a covered "auto", less:

a. Any amount paid under the **Physical Damage Coverage** Section of the Coverage Form; and

b. Any:

(1) Overdue lease or loan payments at the time of the "loss";

(2) Financial penalties imposed under a lease for excessive use, abnormal wear and tear or high mileage;

(3) Security deposits not returned by the lessor;

(4) Costs for extended warranties, credit life insurance, health, accident or disability insurance purchased with the loan or lease; and

(5) Carry-over balances from previous leases or loans.

F. Towing and Labor

Paragraph **A.2.** of the **Physical Damage Coverage** Section is replaced by the following:

We will pay up to $75 for towing and labor costs incurred each time a covered "auto" that is a "private passenger type", light truck or medium truck is disabled. However, the labor must be performed at the place of disablement.

As used in this provision, "private passenger type" means a private passenger or station wagon type "auto" and includes an "auto" of the pickup or van type if not used for business purposes.

G. Extended Glass Coverage

The following is added to Paragraph **A.3.a.** of the **Physical Damage Coverage** Section:

If glass must be replaced, the deductible shown in the Declarations will apply. However, if glass can be repaired and is actually repaired rather than replaced, the deductible will be waived. You have the option of having the glass repaired rather than replaced.

H. Hired Auto Physical Damage – Increased Loss of Use Expenses

The **Coverage Extension** for **Loss Of Use Expenses** in the **Physical Damage Coverage** Section is replaced by the following:

Loss Of Use Expenses

For Hired Auto Physical Damage, we will pay expenses for which an "insured" becomes legally responsible to pay for loss of use of a vehicle rented or hired without a driver under a written rental contract or written rental agreement. We will pay for loss of use expenses if caused by:

(1) Other than collision only if the Declarations indicate that Comprehensive Coverage is provided for any covered "auto";

Includes copyrighted material of Insurance Services Office, Inc., with its permission.

(2) Specified Causes Of Loss only if the Declarations indicate that Specified Causes Of Loss Coverage is provided for any covered "auto"; or

(3) Collision only if the Declarations indicate that Collision Coverage is provided for any covered "auto".

However, the most we will pay for any expenses for loss of use is $100 per day, to a maximum of $3000.

I. Personal Effects Coverage

The following is added to the **Coverage** Provision of the **Physical Damage Coverage** Section:

Personal Effects Coverage

a. We will pay up to $750 for "loss" to personal effects which are:

(1) Personal property owned by an "insured"; and

(2) In or on a covered "auto".

b. Subject to Paragraph **a.** above, the amount to be paid for "loss" to personal effects will be based on the lesser of:

(1) The reasonable cost to replace; or

(2) The actual cash value.

c. The coverage provided in Paragraphs **a.** and **b.** above, only applies in the event of a total theft of a covered "auto". No deductible applies to this coverage. However, we will not pay for "loss" to personal effects of any of the following:

(1) Accounts, bills, currency, deeds, evidence of debt, money, notes, securities, or commercial paper or other documents of value.

(2) Bullion, gold, silver, platinum, or other precious alloys or metals; furs or fur garments; jewelry, watches, precious or semi-precious stones.

(3) Paintings, statuary and other works of art.

(4) Contraband or property in the course of illegal transportation or trade.

(5) Tapes, records, discs or other similar devices used with audio, visual or data electronic equipment.

Any coverage provided by this Provision is excess over any other insurance coverage available for the same "loss".

J. Tapes, Records and Discs Coverage

1. The Exclusion in Paragraph **B.4.a.** of **Section III – Physical Damage Coverage** in the Business Auto Coverage Form and the Exclusion in Paragraph **B.2.c.** of **Section IV – Physical Damage Coverage** in the Motor Carrier Coverage Form does not apply.

2. The following is added to Paragraph **1.a. Comprehensive Coverage** under the **Coverage** Provision of the **Physical Damage Coverage** Section:

We will pay for "loss" to tapes, records, discs or other similar devices used with audio, visual or data electronic equipment. We will pay only if the tapes, records, discs or other similar audio, visual or data electronic devices:

(a) Are the property of an "insured"; and

(b) Are in a covered "auto" at the time of "loss".

The most we will pay for such "loss" to tapes, records, discs or other similar devices is $500. The **Physical Damage Coverage Deductible** Provision does not apply to such "loss".

K. Airbag Coverage

The Exclusion in Paragraph **B.3.a.** of **Section III – Physical Damage Coverage** in the Business Auto Coverage Form and the Exclusion in Paragraph **B.4.a.** of **Section IV – Physical Damage Coverage** in the Motor Carrier Coverage Form does not apply to the accidental discharge of an airbag.

L. Two or More Deductibles

The following is added to the **Deductible** Provision of the **Physical Damage Coverage** Section:

Includes copyrighted material of Insurance Services Office, Inc., with its permission.

If an accident is covered both by this policy or Coverage Form and by another policy or Coverage Form issued to you by us, the following applies for each covered "auto" on a per vehicle basis:

1. If the deductible on this policy or Coverage Form is the smaller (or smallest) deductible, it will be waived; or
2. If the deductible on this policy or Coverage Form is not the smaller (or smallest) deductible, it will be reduced by the amount of the smaller (or smallest) deductible.

M. Temporary Substitute Autos – Physical Damage

1. The following is added to **Section I – Covered Autos**:

   Temporary Substitute Autos – Physical Damage

   If Physical Damage Coverage is provided by this Coverage Form on your owned covered "autos", the following types of vehicles are also covered "autos" for Physical Damage Coverage:

   Any "auto" you do not own when used with the permission of its owner as a temporary substitute for a covered "auto" you do own but is out of service because of its:

   1. Breakdown;
   2. Repair;
   3. Servicing;
   4. "Loss"; or
   5. Destruction.

2. The following is added to the Paragraph **A. Coverage** Provision of the **Physical Damage Coverage** Section:

   Temporary Substitute Autos – Physical Damage

   We will pay the owner for "loss" to the temporary substitute "auto" unless the "loss" results from fraudulent acts or omissions on your part. If we make any payment to the owner, we will obtain the owner's rights against any other party.

   The deductible for the temporary substitute "auto" will be the same as the deductible for the covered "auto" it replaces.

N. Amended Duties In The Event Of Accident, Claim, Suit Or Loss

Paragraph **a.** of the **Duties In The Event Of Accident, Claim, Suit Or Loss** Condition is replaced by the following:

a. In the event of "accident", claim, "suit" or "loss", you must give us or our authorized representative prompt notice of the "accident", claim, "suit" or "loss". However, these duties only apply when the "accident", claim, "suit" or "loss" is known to you (if you are an individual), a partner (if you are a partnership), a member (if you are a limited liability company) or an executive officer or insurance manager (if you are a corporation). The failure of any agent, servant or employee of the "insured" to notify us of any "accident", claim, "suit" or "loss" shall not invalidate the insurance afforded by this policy.

Include, as soon as practicable:

(1) How, when and where the "accident" or "loss" occurred and if a claim is made or "suit" is brought, written notice of the claim or "suit" including, but not limited to, the date and details of such claim or "suit";

(2) The "insured's" name and address; and

(3) To the extent possible, the names and addresses of any injured persons and witnesses.

If you report an "accident", claim, "suit" or "loss" to another insurer when you should have reported to us, your failure to report to us will not be seen as a violation of these amended duties provided you give us notice as soon as practicable after the fact of the delay becomes known to you.

O. Waiver of Transfer Of Rights Of Recovery Against Others To Us

The following is added to the **Transfer Of Rights Of Recovery Against Others To Us** Condition:

Includes copyrighted material of Insurance Services Office, Inc., with its permission.

This Condition does not apply to the extent required of you by a written contract, executed prior to any "accident" or "loss", provided that the "accident" or "loss" arises out of operations contemplated by such contract. This waiver only applies to the person or organization designated in the contract.

P. Employee Hired Autos – Physical Damage

Paragraph **b.** of the **Other Insurance** Condition in the Business Auto Coverage Form and Paragraph **f.** of the **Other Insurance – Primary and Excess Insurance Provisions** Condition in the Motor Carrier Coverage Form are replaced by the following:

For Hired Auto Physical Damage Coverage, the following are deemed to be covered "autos" you own:

(1) Any covered "auto" you lease, hire, rent or borrow; and

(2) Any covered "auto" hired or rented under a written contract or written agreement entered into by an "employee" or elected or appointed official with your permission while being operated within the course and scope of that "employee's" employment by you or that elected or appointed official's duties as respect their obligations to you.

However, any "auto" that is leased, hired, rented or borrowed with a driver is not a covered "auto".

Q. Unintentional Failure to Disclose Hazards

The following is added to the **Concealment, Misrepresentation Or Fraud** Condition:

However, we will not deny coverage under this Coverage Form if you unintentionally:

(1) Fail to disclose any hazards existing at the inception date of this Coverage Form; or

(2) Make an error, omission, improper description of "autos" or other misstatement of information.

You must notify us as soon as possible after the discovery of any hazards or any other information that was not provided to us prior to the acceptance of this policy.

R. Hired Auto – World Wide Coverage

Paragraph **7.b.(5)** of the **Policy Period, Coverage Territory** Condition is replaced by the following:

(5) Anywhere else in the world if a covered "auto" is leased, hired, rented or borrowed for a period of 60 days or less,

S. Bodily Injury Redefined

The definition of "bodily injury" in the **Definitions** Section is replaced by the following:

"Bodily injury" means bodily injury, sickness or disease, sustained by a person including death or mental anguish, resulting from any of these at any time. Mental anguish means any type of mental or emotional illness or disease.

T. Expected Or Intended Injury

The **Expected Or Intended Injury** Exclusion in Paragraph **B. Exclusions** under **Section II – Covered Auto Liability Coverage** is replaced by the following:

Expected Or Intended Injury

"Bodily injury" or "property damage" expected or intended from the standpoint of the "insured". This exclusion does not apply to "bodily injury" or "property damage" resulting from the use of reasonable force to protect persons or property.

U. Physical Damage – Additional Temporary Transportation Expense Coverage

Paragraph **A.4.a.** of **Section III – Physical Damage Coverage** is replaced by the following:

4. Coverage Extensions

a. Transportation Expenses

We will pay up to $50 per day to a maximum of $1,000 for temporary transportation expense incurred by you because of the total theft of a covered "auto" of the private passenger type. We will pay only for those covered "autos" for which you carry either Comprehensive or Specified Causes of Loss Coverage. We will pay for temporary transportation expenses incurred during the period beginning 48 hours after the theft and ending, regardless of the policy's expiration, when the covered "auto" is returned to use or we pay for its "loss".

Includes copyrighted material of Insurance Services Office, Inc., with its permission.

V. Replacement of a Private Passenger Auto with a Hybrid or Alternative Fuel Source Auto

The following is added to Paragraph **A. Coverage** of the **Physical Damage Coverage** Section:

In the event of a total "loss" to a covered "auto" of the private passenger type that is replaced with a hybrid "auto" or "auto" powered by an alternative fuel source of the private passenger type, we will pay an additional 10% of the cost of the replacement "auto", excluding tax, title, license, other fees and any aftermarket vehicle upgrades, up to a maximum of $2500. The covered "auto" must be replaced by a hybrid "auto" or an "auto" powered by an alternative fuel source within 60 calendar days of the payment of the "loss" and evidenced by a bill of sale or new vehicle lease agreement.

To qualify as a hybrid "auto", the "auto" must be powered by a conventional gasoline engine and another source of propulsion power. The other source of propulsion power must be electric, hydrogen, propane, solar or natural gas, either compressed or liquefied. To qualify as an "auto" powered by an alternative fuel source, the "auto" must be powered by a source of propulsion power other than a conventional gasoline engine. An "auto" solely propelled by biofuel, gasoline or diesel fuel or any blend thereof is not an "auto" powered by an alternative fuel source.

W. Return of Stolen Automobile

The following is added to the **Coverage Extension** Provision of the **Physical Damage Coverage** Section:

If a covered “auto” is stolen and recovered, we will pay the cost of transport to return the “auto” to you. We will pay only for those covered “autos" for which you carry either Comprehensive or Specified Causes of Loss Coverage.

All other terms, conditions, provisions and exclusions of this policy remain the same.

Includes copyrighted material of Insurance Services Office, Inc., with its permission.

THIS ENDORSEMENT CHANGES THE POLICY. PLEASE READ IT CAREFULLY.

DESIGNATED INSURED FOR COVERED AUTOS LIABILITY COVERAGE

This endorsement modifies insurance provided under the following:

AUTO DEALERS COVERAGE FORM
BUSINESS AUTO COVERAGE FORM
MOTOR CARRIER COVERAGE FORM

With respect to coverage provided by this endorsement, the provisions of the Coverage Form apply unless modified by this endorsement.

This endorsement identifies person(s) or organization(s) who are "insureds" for Covered Autos Liability Coverage under the Who Is An Insured provision of the Coverage Form. This endorsement does not alter coverage provided in the Coverage Form.

This endorsement changes the policy effective on the inception date of the policy unless another date is indicated below.

Named Insured:	BRADBURY STAMM CONSTRUCTION, INC.
Endorsement Effective Date:	

SCHEDULE

Name Of Person(s) Or Organization(s):	Any person or organization to whom or which you are required to provide insured status or insured status on a primary, non-contributory basis, in a written contract or written agreement executed prior to loss, except where such contract or agreement is prohibited by law

Information required to complete this Schedule, if not shown above, will be shown in the Declarations.

Each person or organization shown in the Schedule is an "insured" for Covered Autos Liability Coverage, but only to the extent that person or organization qualifies as an "insured" under the Who Is An Insured provision contained in Paragraph **A.1.** of Section **II** – Covered Autos Liability Coverage in the Business Auto and Motor Carrier Coverage Forms and Paragraph **D.2.** of Section **I** – Covered Autos Coverages of the Auto Dealers Coverage Form.

© Insurance Services Office, Inc., 2011

WAIVER OF OUR RIGHT TO RECOVER FROM OTHERS ENDORSEMENT

We have the right to recover our payments from anyone liable for an injury covered by this policy. We will not enforce our right against the person or organization named in the Schedule. (This agreement applies only to the extent that you perform work under a written contract that requires you to obtain this agreement from us.)

This agreement shall not operate directly or indirectly to benefit anyone not named in the Schedule.

Schedule

ALL PERSONS AND/OR ORGANIZATIONS THAT ARE REQUIRED BY WRITTEN CONTRACT OR AGREEMENT WITH THE INSURED, EXECUTED PRIOR TO THE ACCIDENT OR LOSS, THAT WAIVER OF SUBROGATION BE PROVIDED UNDER THIS POLICY FOR WORK PERFORMED BY YOU FOR THAT PERSON AND/OR ORGANIZATION

This endorsement changes the policy to which it is attached and is effective on the date issued unless otherwise stated.

(The information below is required only when this endorsement is issued subsequent to preparation of the policy.)

Endorsement Effective 07/01/2024 Policy No. WC 2927128 - 02 Endorsement No.

Insured BRADBURY STAMM CONSTRUCTION, INC. Premium $

Insurance Company Zurich American Insurance Company Countersigned by_____

Copyright 1983 National Council on Compensation Insurance, Inc.

TEXAS WAIVER OF OUR RIGHT TO RECOVER FROM OTHERS ENDORSEMENT

This endorsement applies only to the insurance provided by the policy because Texas is shown in Item 3.A. of the Information Page.

We have the right to recover our payments from anyone liable for an injury covered by this policy. We will not enforce our right against the person or organization named in the Schedule, but this waiver applies only with respect to bodily injury arising out of the operations described in the Schedule where you are required by a written contract to obtain this waiver from us.

This endorsement shall not operate directly or indirectly to benefit anyone not named in the Schedule.

The premium for this endorsement is shown in the Schedule.

Schedule

1. ( ) Specific Waiver

   Name of person or organization:

   (X) Blanket Waiver

   Any person or organization for whom the Named Insured has agreed by written contract to furnish this waiver.

2. Operations:

3. Premium:

   The premium charge for this endorsement shall be 0% percent of the premium developed on payroll in connection with work performed for the above person(s) or organization(s) arising out of the operations described.

4. Advance Premium: INCL

This endorsement changes the policy to which it is attached and is effective on the date issued unless otherwise stated.

(The information below is required only when this endorsement is issued subsequent to preparation of the policy.)

Endorsement Effective 07/01/2024 Policy No. WC 2927128 - 02 Endorsement No.

Insured BRADBURY STAMM CONSTRUCTION, INC. Premium

Insurance Company Zurich American Insurance Company Countersigned by_____

© Copyright 2014 National Council on Compensation Insurance, Inc. All Rights Reserved.

ITEM #: 25-0425

Munis Contract #: _____

ITB #: 24002

CITY OF SANTA FE

CONSTRUCTION CONTRACT

THIS CONTRACT is made and entered into by and between the City of Santa Fe, New Mexico, hereinafter referred to as the "City," and **Bradbury Stamm Construction**, hereinafter referred to as the "Contractor," and is effective as of the date set forth below upon which it is executed by the Parties.

RECITALS

WHEREAS, the City, through its Governing Body, is authorized to enter into a construction Contract for the project; and

WHEREAS, the City has procured this Contract according to the established State and Local Purchasing procedures for contracts of the type and amount; and

The City and the Contractor hereby agree as follows:

1. Scope of Work

A. The Contractor shall perform the following work:

The Contractor shall perform all the work required by the Contract Documents for CIP Number 39115 Canyon Road Water Treatment Plant Flocculation and Sedimentation Improvements (Bid Number 24002) adhering to the Standard General Conditions attached.

The work designated CIP Number 39115 Canyon Road Water Treatment Plant Flocculation and Sedimentation Improvements consists of but is not limited to the Scope of Work as described in the attached Standard General Conditions of the Construction Contract (Attachment 1), Supplementary Conditions of the Construction Contract (Attachment 2), Project Specifications (Attachments 3 and 4) and Drawings (Attachment 5).

The Contractor shall be responsible for verifications of all conditions, measurements, and dimensions for bidding.

The Contractor shall be responsible for all permits, fees, and State inspections associated with the construction.

Copyright© 2018 National Society of Professional Engineers, American Council of Engineering Companies, and American Society of Civil Engineers. All rights reserved.

B. Project: Canyon Road Water Treatment Plant Flocculation and Sedimentation Improvements

C. City Department: Public Utilities, Water Division

D. Distribution:
- City of Santa Fe Water Division, Clinton Peterson, cdpeterson@santafenm.gov
- Contractor: Bradbury Stamm Construction
- Engineer: Carollo Engineers, Inc., Jason Assouline, jassouline@carollo.com

2. **Compensation**

A. The City shall pay to the Contractor in full payment for services satisfactorily performed, and such compensation not to exceed $21,882,300, excluding gross receipts tax. The New Mexico gross receipts tax levied on the amounts payable under this Contract shall be paid by the City to the Contractor, as follows:

The Unit Bid Contract Total is determined as follows:

Base Bid	$19,893,000.00
Unanticipated Cost Overrun	$1,989,300.00
Gross Receipts Tax (8.1875%)	$1,791,613.31

Base Bid plus Unanticipated Cost Overrun plus NMGRT $23,673,913.31

The total amount payable to the Contractor under this Contract, including Alternates (if needed) gross receipts tax and expenses, shall not exceed $23,673,913.31 (Twenty-three million, six-hundred seventy-three thousand, nine hundred thirteen dollars and thirty-one cents). This amount is a maximum and not a guarantee that the work assigned to be performed by Contractor under this Contract shall equal the amount stated herein. The parties do not intend for the Contractor to continue to provide services without compensation when the total compensation amount is reached. Contractor is responsible for notifying the City when the services provided under this Contract reach the total compensation amount. In no event will the Contractor be paid for services provided in excess of the total compensation amount without this Contract being amended in writing prior to those services in excess of the total compensation amount being provided.

B. Payment is subject to availability of funds pursuant to the Appropriations Paragraph set forth below and to any negotiations between the parties from year to year pursuant to Paragraph 1, Scope of Work, and to approval by the City. All invoices MUST BE received by the City no later than thirty (30) days after the termination of the Fiscal Year in which the services were delivered. Invoices received after such date WILL NOT BE PAID.

C. Contractor must submit a detailed statement accounting for all services performed and expenses incurred. If the City finds that the services are not acceptable, within thirty days after the date of receipt of written notice from the Contractor that payment is requested, it shall provide the Contractor a letter of exception explaining the defect or objection to the services, and outlining

Copyright© 2018 National Society of Professional Engineers, American Council of Engineering Companies, and American Society of Civil Engineers. All rights reserved.

steps the Contractor may take to provide remedial action. Upon certification by the City that the services have been received and accepted, payment shall be tendered to the Contractor within twenty-one days after the date of acceptance. If payment is made by mail, the payment shall be deemed tendered on the date it is postmarked.

D. If the City fails to pay the contractor within twenty-one days after receipt of an undisputed request for payment, the City shall pay interest to the contractor beginning on the twenty-second day after payment was due, computed at one and one-half percent of the undisputed amount per month or fraction of a month until the payment is issued. If the City receives an improperly completed invoice, the City shall notify the sender of the invoice within seven days of receipt in what way the invoice is improperly completed, and the owner has no further duty to pay on the improperly completed invoice until it is resubmitted as complete.

E. **Notice of Extended Payment Provision for Grant Funded Contracts**. This contract allows the City to make payment within 45 days after submission of an undisputed request for payment for contracts funded by grant money consistent with NMSA 1978, sec. 57-128-5(B).

3. Term

THIS CONTRACT SHALL NOT BECOME EFFECTIVE UNTIL APPROVED IN WRITING BY THE CITY. This contract shall terminate on 12/31/28 unless terminated pursuant to paragraph 4 (Termination), or paragraph 5 (Appropriations). The City reserves the right to renew this contract on an annual basis by mutual agreement subject to the limitations in NMSA 1978, Sections 13-1-150 through 152.

4. Termination

A. Grounds. The City may terminate this Contract for convenience or cause. For contracts within their authority, the City Manager or their designee is authorized to provide the notice of termination, otherwise such notice of termination shall be provided by the Mayor or their designee as authorized by the Governing Body. The Contractor may only terminate this Contract based upon the City's uncured, material breach of this Contract.

B. Notice; City Opportunity to Cure.

1) Except as otherwise provided in Paragraphs 7.A and 17, the City shall give Contractor written notice of termination at least thirty (30) days prior to the intended date of termination.

2) Contractor shall give City written notice of termination at least thirty (30) days prior to the intended date of termination, which notice shall (i) identify all the City's material breaches of this Contract upon which the termination is based and (ii) state what the City must do to cure such material breaches. Contractor's notice of termination shall only be effective (i) if the City does not cure all material breaches within the thirty (30) day notice period or (ii) in the case of material breaches that cannot be cured within thirty (30) days, the City does not, within the thirty (30) day notice period, notify the Contractor of its intent to cure and begin with due diligence to cure the material breach.

3) Notwithstanding the foregoing, this Contract may be terminated immediately upon written notice to the Contractor (i) if the Contractor becomes unable to perform the services contracted for, as determined by the City; (ii) if, during the term of this Contract, the Contractor is suspended or debarred by the City; or (iii) the Contract is

Copyright© 2018 National Society of Professional Engineers, American Council of Engineering Companies, and American Society of Civil Engineers. All rights reserved.

terminated pursuant to Paragraph 5, "Appropriations," of this Contract.

C. Liability. Except as otherwise expressly allowed or provided under this Contract, the City's sole liability upon termination shall be to pay for acceptable work performed prior to the Contractor's receipt or issuance of a notice of termination; provided, however, that a notice of termination shall not nullify or otherwise affect either party's liability for pre-termination defaults under or breaches of this Contract. The Contractor shall submit an invoice for such work within thirty (30) days of receiving or sending the notice of termination. *THIS PROVISION IS NOT EXCLUSIVE AND DOES NOT WAIVE THE CITY'S OTHER LEGAL RIGHTS AND REMEDIES CAUSED BY THE CONTRACTOR'S DEFAULT/BREACH OF THIS CONTRACT.*

5. Appropriations

The terms of this Contract are contingent upon sufficient appropriations and authorization being made by the Governing Body for the performance of this Contract. If sufficient appropriations and authorization are not made by the Governing Body, this Contract shall terminate immediately upon written notice being given by the City to the Contractor. The City's decision as to whether sufficient appropriations are available shall be accepted by the Contractor and shall be final. If the City proposes an amendment to the Contract to unilaterally reduce funding, the Contractor shall have the option to terminate the Contract or to agree to the reduced funding, within thirty (30) days of receipt of the proposed amendment.

6. Status of Contractor

The Contractor and its agents and employees are independent contractors performing construction services for the City and are not employees of the City. The Contractor and its agents and employees shall not accrue leave, retirement, insurance, bonding, use of City vehicles, or any other benefits afforded to employees of the City as a result of this Contract. The Contractor acknowledges that all sums received hereunder are reportable by the Contractor for tax purposes, including without limitation, self-employment and business income tax. The Contractor agrees not to purport to bind the City unless the Contractor has express written authority to do so, and then only within the strict limits of that authority.

7. Construction Contract Performance and Payment Bond

A. When a construction contract is awarded in excess of twenty-five thousand dollars ($25,000), the following bonds or security shall be delivered to the City and shall become binding on the parties upon the execution of the contract. If the Contractor fails to deliver the required performance and payment bonds, the Contractor's bid shall be rejected, its bid security shall be enforced to the extent of actual damages. Award of the contract shall be made pursuant to the Procurement Code in the following manner:

(1) a performance bond satisfactory to the City, executed by a surety company authorized to do business in this state and said surety to be approved in federal circular 570 as published by the United States treasury department or the state board of finance or the local governing authority, in an amount equal to one hundred percent of the price specified in the contract; and

(2) a payment bond satisfactory to the City, executed by a surety company authorized to do business in this state and said surety to be approved in federal circular 570 as published by the United States treasury department or the state board of finance or the local governing authority, in an amount equal to one hundred percent of the price

Copyright© 2018 National Society of Professional Engineers, American Council of Engineering Companies, and American Society of Civil Engineers. All rights reserved.

specified in the contract, for the protection of all persons supplying labor and material to the contractor or its subcontractors for the performance of the work provided for in the contract.

B. A subcontractor shall provide a performance and payment bond on a public works building project if the subcontractor's contract for work to be performed on a project is one hundred twenty-five thousand dollars ($125,000) or more.

8. Assignment

The Contractor shall not assign or transfer any interest in this Contract or assign any claims for money due or to become due under this Contract without the prior written approval of the City.

9. Subcontracting

The Contractor shall not subcontract any portion of the services to be performed under this Contract without the prior written approval of the City. No such subcontract shall relieve the primary Contractor from its obligations and liabilities under this Contract, nor shall any subcontract obligate direct payment from the City.

10. Release

Final payment of the amounts due under this Contract shall operate as a release of the City, its officers and employees from all liabilities, claims and obligations whatsoever arising from or under this Contract.

11. Confidentiality

Any confidential information provided to or developed by the Contractor in the performance of this Contract shall be kept confidential and shall not be made available to any individual or organization by the Contractor without the prior written approval of the City.

12. Product of Service -- Copyright

All materials developed or acquired by the Contractor under this Contract shall become the property of the City and shall be delivered to the City no later than the termination date of this Contract. Nothing developed or produced, in whole or in part, by the Contractor under this Contract shall be the subject of an application for copyright or other claim of ownership by or on behalf of the Contractor.

13. Conflict of Interest; Governmental Conduct Act

A. The Contractor represents and warrants that it presently has no interest and, during the term of this Contract, shall not acquire any interest, direct or indirect, which would conflict in any manner or degree with the performance or services required under the Contract.

B. The Contractor further represents and warrants that it has complied with, and, during the term of this Contract, will continue to comply with, and that this Contract complies with all applicable provisions of the Governmental Conduct Act, Chapter 10, Article 16 NMSA 1978.

C. Contractor's representations and warranties in Paragraphs A and B of this Article 12 are material representations of fact upon which the City relied when this Contract was entered into by the parties. Contractor shall provide immediate written notice to the City if, at any time

Copyright© 2018 National Society of Professional Engineers, American Council of Engineering Companies, and American Society of Civil Engineers. All rights reserved.

during the term of this Contract, Contractor learns that Contractor's representations and warranties in Paragraphs A and B of this Article 12 were erroneous on the effective date of this Contract or have become erroneous by reason of new or changed circumstances. If it is later determined that Contractor's representations and warranties in Paragraphs A and B of this Article 12 were erroneous on the effective date of this Contract or have become erroneous by reason of new or changed circumstances, in addition to other remedies available to the City and notwithstanding anything in the Contract to the contrary, the City may immediately terminate the Contract.

D. All terms defined in the Governmental Conduct Act have the same meaning in this section.

14. Amendment

A. This Contract shall not be altered, changed or amended except by instrument in writing executed by the parties hereto and all other required signatories.

B. If the City proposes an amendment to the Contract to unilaterally reduce funding due to budget or other considerations, the Contractor shall, within thirty (30) days of receipt of the proposed Amendment, have the option to terminate the Contract, pursuant to the termination provisions as set forth in Article 4 herein, or to agree to the reduced funding.

15. Change Orders

A. Changes. The Contractor may only make changes or revisions within the Scope of Work as defined by Article 1 and/or Exhibit 1 after receipt of written approval by the City Manager or his/her designee. Such change may only be made to Tasks or Sub-Task as defined in the Scope of Work. Under no circumstance shall such change affect the:

1) Deliverable requirements, as outlined in the Scope of Work;
2) Due date of any Deliverable, as outlined in the Scope of Work;
3) Compensation of any Deliverable, as outlined in the Scope of Work;
4) Contract compensation, as outlined in Article 2; or
5) Contract termination, as outlined in Article 4.

B. Change Request Process. In the event that circumstances warrant a change to accomplish the Scope of Work as described above, a Change Request shall be submitted that meets the following criteria:

1) The Project Manager shall draft a written Change Request for review and approval by the City Manager to include:
   (a) the name of the person requesting the change;
   (b) a summary of the required change;
   (c) the start date for the change;
   (d) the reason and necessity for change;
   (e) the elements to be altered; and
   (f) the impact of the change.

Copyright© 2018 National Society of Professional Engineers, American Council of Engineering Companies, and American Society of Civil Engineers. All rights reserved.

2. The City Manager shall provide a written decision on the Change Request to the Contractor within a maximum of ten (10) Business Days of receipt of the Change Request. All decisions made by the City Manager are final. Change Requests, once approved, become a part of the Contract, and become binding as a part of the original Contract.

16. Merger

This Contract incorporates all the agreements, covenants, and understandings between the parties hereto concerning the subject matter hereof, and all such covenants, agreements and understandings have been merged into this written contract.

All terms and conditions of the **ITB,** Canyon Road Water Treatment Plant Flocculation and Sedimentation Improvements, Cip Number 39115, and the Contractor's response to such document(s) are incorporated herein by reference and is included in the order of precedence.

No prior Agreement or understanding, oral or otherwise, of the parties or their agents shall be valid or enforceable unless embodied in this Contract.

17. Penalties for violation of law

NMSA 1978, sections 13-1-28 through 13-1-199, imposes civil and criminal penalties for its violation. In addition, the New Mexico criminal statutes impose felony penalties for illegal bribes, gratuities and kickbacks.

18. Equal Opportunity Compliance

The Contractor agrees to abide by all federal and state laws and rules and regulations, and Santa Fe City Code, pertaining to equal employment opportunity. In accordance with all such laws of the State of New Mexico, the Contractor assures that no person in the United States shall, on the grounds of race, religion, color, national origin, ancestry, sex, age, physical or mental handicap, or serious medical condition, spousal affiliation, sexual orientation or gender identity, be excluded from employment with or participation in, be denied the benefits of, or be otherwise subjected to discrimination under any program or activity performed under this Contract. If Contractor is found not to be in compliance with these requirements during the life of this Contract, Contractor agrees to take appropriate steps to correct these deficiencies.

19. Applicable Law

The laws of the State of New Mexico shall govern this Contract, without giving effect to its choice of law provisions. Venue shall be proper only in a New Mexico court of competent jurisdiction in accordance with NMSA 1978, section 38-3-2. By execution of this Contract, Contractor acknowledges and agrees to the jurisdiction of the courts of the State of New Mexico over any and all lawsuits arising under or out of any term of this Contract.

20. Workers Compensation

The Contractor agrees to comply with state laws and rules applicable to workers compensation benefits for its employees. If the Contractor fails to comply with the Workers Compensation Act and applicable rules when required to do so, this Contract may be terminated by the City.

21. Other Insurance

Copyright© 2018 National Society of Professional Engineers, American Council of Engineering Companies, and American Society of Civil Engineers. All rights reserved.

If the services contemplated under this Contract will be performed on or in City facilities or property, Contractor shall maintain in force during the entire term of this Contract, the following insurance coverage(s), naming the City as additional insured.

A. **Commercial General Liability** insurance shall be written on an occurrence basis and be a broad as ISO Form CG 00 01 with limits not less than $2,000,000 per occurrence and $2,000,000 in the aggregate for claims against bodily injury, personal and advertising injury, and property damage. Said policy shall include broad form Contractual Liability coverage and be endorsed to name the City of Santa Fe their officials, officers, employees, and agents as additional insureds.

B. **Business Automobile Liability** insurance for all owned, non-owned automobiles, with a combined single limit not less than $1,000,000 per accident.

C. **Broader Coverage and Limits**. The insurance requirements under this Contract shall be the greater of (1) the minimum coverage and limits specified in this Contract, or (2) the broader coverage and maximum limits of coverage of any insurance policy or proceeds available to the Named Insured. It is agreed that these insurance requirements shall not in any way act to reduce coverage that is broader or that includes higher limits than the minimums required herein. No representation is made that the minimum insurance requirements of this Contract are sufficient to cover the obligations of Contractor hereunder.

D. Contractor shall maintain the above insurance for the term of this Contract and name the City as an additional insured and provide for 30 days cancellation notice on any Certificate of Insurance form furnished by Contractor. Such certificate shall also specifically state the coverage provided under the policy is primary over any other valid and collectible insurance and provide a waiver of subrogation.

22. Records and Financial Audit

The Contractor shall maintain detailed time and expenditure records that indicate the date; time, nature and cost of services rendered during the Contract's term and effect and retain them for a period of three (3) years from the date of final payment under this Contract. The records shall be subject to inspection by the City. The City shall have the right to audit billings both before and after payment. Payment under this Contract shall not foreclose the right of the City to recover excessive or illegal payments

23. Indemnification

The Contractor shall defend, indemnify and hold harmless the City from all actions, proceeding, claims, demands, costs, damages, attorneys' fees and all other liabilities and expenses of any kind from any source which may arise out of the performance of this Contract, caused by the negligent act or failure to act of the Contractor, its officers, employees, servants, subcontractors or agents, or if caused by the actions of any client of the Contractor resulting in injury or damage to persons or property during the time when the Contractor or any officer, agent, employee, servant or subcontractor thereof has or is performing services pursuant to this Contract. In the event that any action, suit or proceeding related to the services performed by the Contractor or any officer, agent, employee, servant or subcontractor under this Contract is brought against the Contractor, the Contractor shall, as soon as practicable but no later than two (2) days after it receives notice thereof,

Copyright© 2018 National Society of Professional Engineers, American Council of Engineering Companies, and American Society of Civil Engineers. All rights reserved.

notify the legal counsel of the City.

24. New Mexico Tort Claims Act

Any liability incurred by the City of Santa Fe in connection with this Contract is subject to the immunities and limitations of the New Mexico Tort Claims Act, Section 41-4-1, et. seq. NMSA 1978, as amended. The City and its "public employees" as defined in the New Mexico Tort Claims Act, do not waive sovereign immunity, do not waive any defense and do not waive any limitation of liability pursuant to law. No provision in this Contract modifies or waives any provision of the New Mexico Tort Claims Act.

25. Invalid Term or Condition

If any term or condition of this Contract shall be held invalid or unenforceable, the remainder of this Contract shall not be affected and shall be valid and enforceable.

26. Enforcement of Contract

A party's failure to require strict performance of any provision of this Contract shall not waive or diminish that party's right thereafter to demand strict compliance with that or any other provision. No waiver by a party of any of its rights under this Contract shall be effective unless express and in writing, and no effective waiver by a party of any of its rights shall be effective to waive any other rights.

27. Notices

Any notice required to be given to either party by this Contract shall be in writing and shall be delivered in person, by courier service or by U.S. mail, either first class or certified, return receipt requested, postage prepaid, as follows:

To the City: Clinton Peterson, 801 W San Mateo Rd. Santa Fe, NM 87505, cdpeterson@santafenm.gov.

To the Contractor: Lawrence Peterson, 7110 2nd St NW, Albuquerque, NM 87107, LPeterson@bradburystamm.com.

28. Authority

If Contractor is other than a natural person, the individual(s) signing this Contract on behalf of Contractor represents and warrants that he or she has the power and authority to bind Contractor, and that no further action, resolution, or approval from Contractor is necessary to enter into a binding contract.

29. Progress Payments

Based upon Application for Payment submitted to the City by the Contractor and Certificates for Payment issued by the City, the City shall make progress payments on account of the Contract sum to the Contractor as provided in the Contract documents for the period ending the last day of the month as follows:

Not later than twenty-one (21) days following the end of the period covered by the Application for Payment, one hundred percent (100%) of the portion of the Contract Sum properly allocable to labor, materials, and equipment incorporated in the work and one hundred percent (100%) of the

Copyright© 2018 National Society of Professional Engineers, American Council of Engineering Companies, and American Society of Civil Engineers. All rights reserved.

portion of the Contract sum properly allocable to materials and equipment suitably stored at the site or some other location agreed upon in writing for the period covered by the Application for Payment, less the aggregate of previous payments made by the City; and upon substantial completion of the entire work, a sum sufficient to increase the total payments to one hundred percent (100%) of the Contract sum, less such amounts as the City shall determine for all incomplete work and unsettled claims as provided in the Contract documents.

30. Liquidated Damages

Should the Contractor neglect, refuse, or otherwise fail to complete the work within the Contract Time for Physical Completion or any extension in the Contract thereof, the Contractor agrees to pay the City the amount of Twenty Five Hundred Dollars ($2,500.00) per consecutive calendar day that passes until Physical Completion and acceptance or until voided pursuant to the provisions of the General Conditions of the Contract, not as a penalty, but as liquidated damages for such breach of the Contract.

31. Final Payment

Final payment, constituting the entire unpaid balance of the Contract sum, unless it is a disputed payment, shall be paid by the City to the Contractor within twenty-one (21) calendar days, after all deficiencies to the Contract document that were noted during the Substantial Completion Inspection and listed on the attachment to the Certificate of Substantial Completion have been corrected, and provided the Contract has been fully performed and a final Certificate for Payment has been issued by the City. In addition, the Contractor shall provide to the City a certified statement of Release of Lien (AIA Document G706A or approved form), Consent of Surety, Warranty from Prime Contractor, Warranties from Suppliers and Manufacturers, training sessions, equipment/operating manuals, and as-built drawings.

32. Schedule

The Contractor shall, within five (5) days after the effective date of Notice to Proceed, prepare and submit a progress schedule covering project operations for the 30-day Contract period. This progress schedule shall be of the type generally referred to as a Critical Path Method (CPM), Critical Path Schedule (CPS), and Critical Path Analysis (CPA), and other similar designations. The CPM shall be used to control the timing and sequences of the project. All work shall be done in accordance with the CPM Planning and Scheduling. A written statement of explanation shall be submitted with the progress schedule. All costs incurred by the contractor to implement the CPM shall be borne by the Contractor and are part of their Contract.

33. General and Special Provisions

A. Terms used in this Contract which are defined in the Conditions of the Contract shall have the meanings designated in those Conditions.

B. An enumeration of the Contractor's General Comprehensive Liability Insurance requirements
appears in the General Conditions of the Contract for construction. Insurance requirements are also described in the Instructions to the Bidder section of the Project Manual. Contractor shall maintain adequate insurance in at least the maximum amounts, which the City could be liable

Copyright© 2018 National Society of Professional Engineers, American Council of Engineering Companies, and American Society of Civil Engineers. All rights reserved.

under the New Mexico Tort Claims Act and shall provide proof of such insurance coverage to the City. It is the sole responsibility of the Contractor to comply with the law.

C. This Contract shall not become effective until: (1) approved by the Governing Body; and (2) signed by all parties required to sign this Contract.

D. The Contractor shall maintain detailed time records which indicate the date, time and nature of services rendered. These records shall be subject to inspection by the City, the Department of Finance and Administration and the State Auditor. The City shall have the right to audit billings both before and after payment. Payment under this Contract shall not foreclose the right of the City to recover excessive illegal payments.

E. The Contractor warrants that the Contractor presently has no interest and shall not acquire any interest, direct or indirect, which would conflict in any manner or degree with the performance or services required under this Contract.

F. The Contractor hereby warrants that the Contractor complies with the Americans with Disabilities Act, 29 CFR 1630.

G. Gender, Singular/Plural. Words of any gender used in this Contract shall be held and construed to include any other gender, and words in the singular number shall be held to include the plural, unless the context otherwise requires.

H. Captions and Section Headings. The captions and section headings contained in this Contract are for convenience of reference only, and in no way limit, define, or enlarge the terms, scope, and conditions of this Contract.

I. Certificates and Documents Incorporated. All certificates and documentation required by the provisions of the Contract shall be attached to this Contract at the time of execution and are hereby incorporated by reference as though set forth in full in this Contract to the extent they are consistent with its conditions and terms.

J. Separability. If any clause or provision of this Contract is illegal, invalid or unenforceable under present or future laws effective during the term of this Contract, then and in that event, it is the intention of the parties hereto that the remainder of this Contract shall not be affected thereby.

K. Words and Phrases. Words, phrases, and abbreviations, which have well-known technical or
trade meanings used in the Contract documents shall be used according to such recognized meaning. In the event of a conflict, the more stringent meaning shall govern.

L. Relationship of Contract Documents. The Contract Documents are complementary, and any requirement of one Contract Document shall be as binding as if required by all.

M. Pursuant to NMSA 1978, section 13-1-191, reference is hereby made to the Criminal Laws of New Mexico (including NMSA 1978, sections 30-14-1, 30-24-2, and 30-41-1 through 30-

Copyright© 2018 National Society of Professional Engineers, American Council of Engineering Companies, and American Society of Civil Engineers. All rights reserved.

41-3) which prohibit bribes, kickbacks, and gratuities, violation of which constitutes a felony. Further, the Procurement Code (NMSA 1978, sections 13-1-28 through 13-1-199) imposes civil and criminal penalties for its violation.

N. Pursuant to NMSA 1978, section 13-4-11. Reference is hereby made to the Minimum Wage on Public Works; weekly payments; posting wage scale; withholding funds.

Copyright© 2018 National Society of Professional Engineers, American Council of Engineering Companies, and American Society of Civil Engineers. All rights reserved.

IN WITNESS WHEREOF, the Parties have executed this Contract as of the date of the signature by the required approval authorities below.

CITY OF SANTA FE:

Alan Webber (Sep 15, 2025 16:49:35 MDT)

ALAN WEBBER, CITY MAYOR

DATE: 09/15/2025

CONTRACTOR:

Cynthia Schultz (Aug 4, 2025 10:28:16 CDT)

CYNTHIA SCHULTZ, CEO
BRADBURY STAMM

DATE: Aug 4, 2025

CRS#: _____

Registration #: _____

ATTEST:

ANDREA SALAZAR (Sep 15, 2025 16:51:46 MDT)

ANDRÉA SALAZAR, CITY CLERK

GB MTG 09-10-25

CITY ATTORNEY'S OFFICE:

Marcos Martinez

Marcos Martinez (Aug 4, 2025 09:28:40 MDT)

SENIOR ASSISTANT CITY ATTORNEY

APPROVED FOR FINANCES:

Emily K. Oster

FINANCE DIRECTOR

Copyright© 2018 National Society of Professional Engineers, American Council of Engineering Companies, and American Society of Civil Engineers. All rights reserved.

ATTACHMENT 1 - STANDARD GENERAL CONDITIONS

OF THE CONSTRUCTION CONTRACT

TABLE OF CONTENTS

Page

Article 1—Definitions and Terminology 56
1.01 Defined Terms 176
1.02 Terminology 221
Article 2—Preliminary Matters 232
2.01 Delivery of Performance and Payment Bonds; Evidence of Insurance 232
2.02 Copies of Documents 233
2.03 Before Starting Construction 233
2.04 Preconstruction Conference; Designation of Authorized Representatives 243
2.05 Acceptance of Schedules 244
2.06 Electronic Transmittals 244
Article 3—Contract Documents: Intent, Requirements, Reuse 254
3.01 Intent 254
3.02 Reference Standards 255
3.03 Reporting and Resolving Discrepancies 265
3.04 Requirements of the Contract Documents 276
3.05 Reuse of Documents 67
Article 4—Commencement and Progress of the Work 67
4.01 Commencement of Contract Times; Notice to Proceed 67
4.02 Starting the Work 67
4.03 Reference Points 67
4.04 Progress Schedule 68
4.05 Delays in Contractor's Progress 68
Article 5—Site; Subsurface and Physical Conditions; Hazardous Environmental Conditions 70
5.01 Availability of Lands 70
5.02 Use of Site and Other Areas 70
5.03 Subsurface and Physical Conditions 71
5.04 Differing Subsurface or Physical Conditions 322
5.05 Underground Facilities 334
5.06 Hazardous Environmental Conditions at Site 356
Article 6—Bonds and Insurance 78
6.01 Performance, Payment, and Other Bonds 78
6.02 Insurance—General Provisions 79
6.03 Contractor's Insurance 401
6.04 Builder's Risk and Other Property Insurance 412
6.05 Property Losses; Subrogation 422
6.06 Receipt and Application of Property Insurance Proceeds 433
Article 7—Contractor's Responsibilities 434
7.01 Contractor's Means and Methods of Construction 434
7.02 Supervision and Superintendence 434
7.03 Labor; Working Hours 444
7.04 Services, Materials, and Equipment 445
7.05 "Or Equals" 445
7.06 Substitutes 456
7.07 Concerning Subcontractors and Suppliers 88

Copyright© 2018 National Society of Professional Engineers, American Council of Engineering Companies, and American Society of Civil Engineers. All rights reserved.

7.08 Patent Fees and Royalties 90
7.09 Permits 90
7.10 Taxes 91
7.11 Laws and Regulations 91
7.12 Record Documents 91
7.13 Safety and Protection 91
7.14 Hazard Communication Programs 513
7.15 Emergencies 513
7.16 Submittals 523
7.17 Contractor's General Warranty and Guarantee 96
7.18 Indemnification 97
7.19 Delegation of Professional Design Services 98
Article 8—Other Work at the Site 99
8.01 Other Work 99
8.02 Coordination 99
8.03 Legal Relationships 100
Article 9—Owner's Responsibilities 101
9.01 Communications to Contractor 101
9.02 Replacement of Engineer 591
9.03 Furnish Data 591
9.04 Pay When Due 591
9.05 Lands and Easements; Reports, Tests, and Drawings 591
9.06 Insurance 592
9.07 Change Orders 602
9.08 Inspections, Tests, and Approvals 602
9.09 Limitations on Owner's Responsibilities 602
9.10 Undisclosed Hazardous Environmental Condition 602
9.11 Evidence of Financial Arrangements 602
9.12 Safety Programs 602
Article 10—Engineer's Status During Construction 602
10.01 Owner's Representative 602
10.02 Visits to Site 603
10.03 Resident Project Representative 613
10.04 Engineer's Authority 613
10.05 Determinations for Unit Price Work 614
10.06 Decisions on Requirements of Contract Documents and Acceptability of Work 614
10.07 Limitations on Engineer's Authority and Responsibilities 614
10.08 Compliance with Safety Program 624
Article 11—Changes to the Contract 625
11.01 Amending and Supplementing the Contract 625
11.02 Change Orders 625
11.03 Work Change Directives 635
11.04 Field Orders 636
11.05 Owner-Authorized Changes in the Work 646
11.06 Unauthorized Changes in the Work 646
11.07 Change of Contract Price 6407
11.08 Change of Contract Times 6508
11.09 Change Proposals 6508
11.10 Notification to Surety 6709
Article 12—Claims 670
12.01 Claims 670
Article 13—Cost of the Work; Allowances; Unit Price Work 681
13.01 Cost of the Work 681

Copyright© 2018 National Society of Professional Engineers, American Council of Engineering Companies, and American Society of Civil Engineers. All rights reserved.

13.02 Allowances 725
13.03 Unit Price Work 725
Article 14—Tests and Inspections; Correction, Removal, or Acceptance of Defective Work 736
14.01 Access to Work 736
14.02 Tests, Inspections, and Approvals 736
14.03 Defective Work 7417
14.04 Acceptance of Defective Work 7418
14.05 Uncovering Work 7518
14.06 Owner May Stop the Work 7519
14.07 Owner May Correct Defective Work 7519
Article 15—Payments to Contractor; Set-Offs; Completion; Correction Period 7619
15.01 Progress Payments 7619
15.02 Contractor's Warranty of Title 793
15.03 Substantial Completion 793
15.04 Partial Use or Occupancy 804
15.05 Final Inspection 815
15.06 Final Payment 815
15.07 Waiver of Claims 826
15.08 Correction Period 826
Article 16—Suspension of Work and Termination 83
16.01 Owner May Suspend Work 83
16.02 Owner May Terminate for Cause 8428
16.03 Owner May Terminate for Convenience 8529
16.04 Contractor May Stop Work or Terminate 8529
Article 17—Final Resolution of Disputes 850
17.01 Methods and Procedures 850
Article 18—Miscellaneous 860
18.01 Giving Notice 860
18.02 Computation of Times 860
18.03 Cumulative Remedies 861
18.04 Limitation of Damages 861
18.05 No Waiver 861
18.06 Survival of Obligations 871
18.07 Controlling Law 871
18.08 Assignment of Contract 871
18.09 Successors and Assigns 871
18.10 Headings 87

Copyright© 2018 National Society of Professional Engineers, American Council of Engineering Companies, and American Society of Civil Engineers. All rights reserved.

STANDARD GENERAL CONDITIONS

OF THE CONSTRUCTION CONTRACT

ARTICLE 1—DEFINITIONS AND TERMINOLOGY

1.01 *Defined Terms*

A. Wherever used in the Bidding Requirements or Contract Documents, a term printed with initial capital letters, including the term's singular and plural forms, will have the meaning indicated in the definitions below. In addition to terms specifically defined, terms with initial capital letters in the Contract Documents include references to identified articles and paragraphs, and the titles of other documents or forms.

1. *Addenda*—Written or graphic instruments issued prior to the opening of Bids which clarify, correct, or change the Bidding Requirements or the proposed Contract Documents.

2. *Agreement*—The written instrument, executed by Owner and Contractor, that sets forth the Contract Price and Contract Times, identifies the parties and the Engineer, and designates the specific items that are Contract Documents.

3. *Application for Payment*—The document prepared by Contractor, in a form acceptable to Engineer, to request progress or final payments, and which is to be accompanied by such supporting documentation as is required by the Contract Documents.

4. *Bid*—The offer of a Bidder submitted on the prescribed form setting forth the prices for the Work to be performed.

5. *Bidder*—An individual or entity that submits a Bid to Owner.

6. *Bidding Documents*—The Bidding Requirements, the proposed Contract Documents, and all Addenda.

7. *Bidding Requirements*—The Advertisement or invitation to bid, Instructions to Bidders, Bid Bond or other Bid security, if any, the Bid Form, and the Bid with any attachments.

8. *Change Order*—A document which is signed by Contractor and Owner and authorizes an addition, deletion, or revision in the Work or an adjustment in the Contract Price or the Contract Times, or other revision to the Contract, issued on or after the Effective Date of the Contract.

9. *Change Proposal*—A written request by Contractor, duly submitted in compliance with the procedural requirements set forth herein, seeking an adjustment in Contract Price or Contract Times; contesting an initial decision by Engineer concerning the requirements of the Contract Documents or the acceptability of Work under the Contract Documents; challenging a set-off against payments due; or seeking other relief with respect to the terms of the Contract.

10. Claim

a. A demand or assertion by Owner directly to Contractor, duly submitted in compliance with the procedural requirements set forth herein, seeking an

Copyright© 2018 National Society of Professional Engineers, American Council of Engineering Companies, and American Society of Civil Engineers. All rights reserved.

adjustment of Contract Price or Contract Times; contesting an initial decision by Engineer concerning the requirements of the Contract Documents or the acceptability of Work under the Contract Documents; contesting Engineer's decision regarding a Change Proposal; seeking resolution of a contractual issue that Engineer has declined to address; or seeking other relief with respect to the terms of the Contract.

b. A demand or assertion by Contractor directly to Owner, duly submitted in compliance with the procedural requirements set forth herein, contesting Engineer's decision regarding a Change Proposal, or seeking resolution of a contractual issue that Engineer has declined to address.

c. A demand or assertion by Owner or Contractor, duly submitted in compliance with the procedural requirements set forth herein, made pursuant to Paragraph 12.01.A.4, concerning disputes arising after Engineer has issued a recommendation of final payment.

d. A demand for money or services by a third party is not a Claim.

11. *Constituent of Concern*—Asbestos, petroleum, radioactive materials, polychlorinated biphenyls (PCBs), lead-based paint (as defined by the HUD/EPA standard), hazardous waste, and any substance, product, waste, or other material of any nature whatsoever that is or becomes listed, regulated, or addressed pursuant to Laws and Regulations regulating, relating to, or imposing liability or standards of conduct concerning, any hazardous, toxic, or dangerous waste, substance, or material.

12. *Contract*—The entire and integrated written contract between Owner and Contractor concerning the Work.

13. *Contract Documents*—Those items so designated in the Agreement, and which together comprise the Contract.

14. *Contract Price*—The money that Owner has agreed to pay Contractor for completion of the Work in accordance with the Contract Documents.

15. *Contract Times*—The number of days or the dates by which Contractor shall: (a) achieve Milestones, if any; (b) achieve Substantial Completion; and (c) complete the Work.

16. *Contractor*—The individual or entity with which Owner has contracted for performance of the Work.

17. *Cost of the Work*—See Paragraph 13.01 for definition.

18. *Drawings*—The part of the Contract that graphically shows the scope, extent, and character of the Work to be performed by Contractor.

19. *Effective Date of the Contract*—The date, indicated in the Agreement, on which the Contract becomes effective.

20. *Electronic Document*—Any Project-related correspondence, attachments to correspondence, data, documents, drawings, information, or graphics, including but not limited to Shop Drawings and other Submittals, that are in an electronic or digital format.

Copyright© 2018 National Society of Professional Engineers, American Council of Engineering Companies, and American Society of Civil Engineers. All rights reserved.

21. *Electronic Means*—Electronic mail (email), upload/download from a secure Project website, or other communications methods that allow: (a) the transmission or communication of Electronic Documents; (b) the documentation of transmissions, including sending and receipt; (c) printing of the transmitted Electronic Document by the recipient; (d) the storage and archiving of the Electronic Document by sender and recipient; and (e) the use by recipient of the Electronic Document for purposes permitted by this Contract. Electronic Means does not include the use of text messaging, or of Facebook, Twitter, Instagram, or similar social media services for transmission of Electronic Documents.

22. *Engineer*—The individual or entity named as such in the Agreement.

23. *Field Order*—A written order issued by Engineer which requires minor changes in the Work but does not change the Contract Price or the Contract Times.

24. *Hazardous Environmental Condition*—The presence at the Site of Constituents of Concern in such quantities or circumstances that may present a danger to persons or property exposed thereto.

    a. The presence at the Site of materials that are necessary for the execution of the Work, or that are to be incorporated into the Work, and that are controlled and contained pursuant to industry practices, Laws and Regulations, and the requirements of the Contract, is not a Hazardous Environmental Condition.

    b. The presence of Constituents of Concern that are to be removed or remediated as part of the Work is not a Hazardous Environmental Condition.

    c. The presence of Constituents of Concern as part of the routine, anticipated, and obvious working conditions at the Site, is not a Hazardous Environmental Condition.

25. *Laws and Regulations; Laws or Regulations*—Any and all applicable laws, statutes, rules, regulations, ordinances, codes, and binding decrees, resolutions, and orders of any and all governmental bodies, agencies, authorities, and courts having jurisdiction.

26. *Liens*—Charges, security interests, or encumbrances upon Contract-related funds, real property, or personal property.

27. *Milestone*—A principal event in the performance of the Work that the Contract requires Contractor to achieve by an intermediate completion date, or by a time prior to Substantial Completion of all the Work.

28. *Notice of Award*—The written notice by Owner to a Bidder of Owner's acceptance of the Bid.

29. *Notice to Proceed*—A written notice by Owner to Contractor fixing the date on which the Contract Times will commence to run and on which Contractor shall start to perform the Work.

30. *Owner*—The individual or entity with which Contractor has contracted regarding the Work, and which has agreed to pay Contractor for the performance of the Work, pursuant to the terms of the Contract.

31. *Progress Schedule*—A schedule, prepared and maintained by Contractor, describing the sequence and duration of the activities comprising Contractor's plan to accomplish the Work within the Contract Times.

Copyright© 2018 National Society of Professional Engineers, American Council of Engineering Companies, and American Society of Civil Engineers. All rights reserved.

32. *Project*—The total undertaking to be accomplished for Owner by engineers, contractors, and others, including planning, study, design, construction, testing, commissioning, and start-up, and of which the Work to be performed under the Contract Documents is a part.

33. *Resident Project Representative*—The authorized representative of Engineer assigned to assist Engineer at the Site. As used herein, the term Resident Project Representative (RPR) includes any assistants or field staff of Resident Project Representative.

34. *Samples*—Physical examples of materials, equipment, or workmanship that are representative of some portion of the Work and that establish the standards by which such portion of the Work will be judged.

35. *Schedule of Submittals*—A schedule, prepared and maintained by Contractor, of required submittals and the time requirements for Engineer's review of the submittals.

36. *Schedule of Values*—A schedule, prepared and maintained by Contractor, allocating portions of the Contract Price to various portions of the Work and used as the basis for reviewing Contractor's Applications for Payment.

37. *Shop Drawings*—All drawings, diagrams, illustrations, schedules, and other data or information that are specifically prepared or assembled by or for Contractor and submitted by Contractor to illustrate some portion of the Work. Shop Drawings, whether approved or not, are not Drawings and are not Contract Documents.

38. *Site*—Lands or areas indicated in the Contract Documents as being furnished by Owner upon which the Work is to be performed, including rights-of-way and easements, and such other lands or areas furnished by Owner which are designated for the use of Contractor.

39. *Specifications*—The part of the Contract that consists of written requirements for materials, equipment, systems, standards, and workmanship as applied to the Work, and certain administrative requirements and procedural matters applicable to the Work.

40. *Subcontractor*—An individual or entity having a direct contract with Contractor or with any other Subcontractor for the performance of a part of the Work.

41. *Submittal*—A written or graphic document, prepared by or for Contractor, which the Contract Documents require Contractor to submit to Engineer, or that is indicated as a Submittal in the Schedule of Submittals accepted by Engineer. Submittals may include Shop Drawings and Samples; schedules; product data; Owner-delegated designs; sustainable design information; information on special procedures; testing plans; results of tests and evaluations, source quality-control testing and inspections, and field or Site quality-control testing and inspections; warranties and certifications; Suppliers' instructions and reports; records of delivery of spare parts and tools; operations and maintenance data; Project photographic documentation; record documents; and other such documents required by the Contract Documents. Submittals, whether or not approved or accepted by Engineer, are not Contract Documents. Change Proposals, Change Orders, Claims, notices, Applications for Payment, and requests for interpretation or clarification are not Submittals.

42. *Substantial Completion*—The time at which the Work (or a specified part thereof) has progressed to the point where, in the opinion of Engineer, the Work (or a specified part

Copyright© 2018 National Society of Professional Engineers, American Council of Engineering Companies, and American Society of Civil Engineers. All rights reserved.

thereof) is sufficiently complete, in accordance with the Contract Documents, so that the Work (or a specified part thereof) can be utilized for the purposes for which it is intended. The terms "substantially complete" and "substantially completed" as applied to all or part of the Work refer to Substantial Completion of such Work.

43. *Successful Bidder*—The Bidder to which the Owner makes an award of contract.

44. *Supplementary Conditions*—The part of the Contract that amends or supplements these General Conditions.

45. *Supplier*—A manufacturer, fabricator, supplier, distributor, or vendor having a direct contract with Contractor or with any Subcontractor to furnish materials or equipment to be incorporated in the Work by Contractor or a Subcontractor.

46. *Technical Data*

    a. Those items expressly identified as Technical Data in the Supplementary Conditions, with respect to either (1) existing subsurface conditions at or adjacent to the Site, or existing physical conditions at or adjacent to the Site including existing surface or subsurface structures (except Underground Facilities) or (2) Hazardous Environmental Conditions at the Site.

    b. If no such express identifications of Technical Data have been made with respect to conditions at the Site, then Technical Data is defined, with respect to conditions at the Site under Paragraphs 5.03, 5.04, and 5.06, as the data contained in boring logs, recorded measurements of subsurface water levels, assessments of the condition of subsurface facilities, laboratory test results, and other factual, objective information regarding conditions at the Site that are set forth in any geotechnical, environmental, or other Site or facilities conditions report prepared for the Project and made available to Contractor.

    c. Information and data regarding the presence or location of Underground Facilities are not intended to be categorized, identified, or defined as Technical Data, and instead Underground Facilities are shown or indicated on the Drawings.

47. *Underground Facilities*—All active or not-in-service underground lines, pipelines, conduits, ducts, encasements, cables, wires, manholes, vaults, tanks, tunnels, or other such facilities or systems at the Site, including but not limited to those facilities or systems that produce, transmit, distribute, or convey telephone or other communications, cable television, fiber optic transmissions, power, electricity, light, heat, gases, oil, crude oil products, liquid petroleum products, water, steam, waste, wastewater, storm water, other liquids or chemicals, or traffic or other control systems. An abandoned facility or system is not an Underground Facility.

48. *Unit Price Work*—Work to be paid for on the basis of unit prices.

49. *Work*—The entire construction or the various separately identifiable parts thereof required to be provided under the Contract Documents. Work includes and is the result of performing or providing all labor, services, and documentation necessary to produce such construction; furnishing, installing, and incorporating all materials and equipment into such construction; and may include related services such as testing, start-up, and commissioning, all as required by the Contract Documents.

Copyright© 2018 National Society of Professional Engineers, American Council of Engineering Companies, and American Society of Civil Engineers. All rights reserved.

50. *Work Change Directive*—A written directive to Contractor issued on or after the Effective Date of the Contract, signed by Owner and recommended by Engineer, ordering an addition, deletion, or revision in the Work.

1.02 *Terminology*

A. The words and terms discussed in Paragraphs 1.02.B, C, D, and E are not defined terms that require initial capital letters, but, when used in the Bidding Requirements or Contract Documents, have the indicated meaning.

B. *Intent of Certain Terms or Adjectives*: The Contract Documents include the terms "as allowed," "as approved," "as ordered," "as directed" or terms of like effect or import to authorize an exercise of professional judgment by Engineer. In addition, the adjectives "reasonable," "suitable," "acceptable," "proper," "satisfactory," or adjectives of like effect or import are used to describe an action or determination of Engineer as to the Work. It is intended that such exercise of professional judgment, action, or determination will be solely to evaluate, in general, the Work for compliance with the information in the Contract Documents and with the design concept of the Project as a functioning whole as shown or indicated in the Contract Documents (unless there is a specific statement indicating otherwise). The use of any such term or adjective is not intended to and shall not be effective to assign to Engineer any duty or authority to supervise or direct the performance of the Work, or any duty or authority to undertake responsibility contrary to the provisions of Article 10 or any other provision of the Contract Documents.

C. *Day*: The word "day" means a calendar day of 24 hours measured from midnight to the next midnight.

D. *Defective*: The word "defective," when modifying the word "Work," refers to Work that is unsatisfactory, faulty, or deficient in that it:

1. does not conform to the Contract Documents;

2. does not meet the requirements of any applicable inspection, reference standard, test, or approval referred to in the Contract Documents; or

3. has been damaged prior to Engineer's recommendation of final payment (unless responsibility for the protection thereof has been assumed by Owner at Substantial Completion in accordance with Paragraph 15.03 or Paragraph 15.04).

E. *Furnish, Install, Perform, Provide*

1. The word "furnish," when used in connection with services, materials, or equipment, means to supply and deliver said services, materials, or equipment to the Site (or some other specified location) ready for use or installation and in usable or operable condition.

2. The word "install," when used in connection with services, materials, or equipment, means to put into use or place in final position said services, materials, or equipment complete and ready for intended use.

3. The words "perform" or "provide," when used in connection with services, materials, or equipment, means to furnish and install said services, materials, or equipment complete and ready for intended use.

4. If the Contract Documents establish an obligation of Contractor with respect to specific services, materials, or equipment, but do not expressly use any of the four

Copyright© 2018 National Society of Professional Engineers, American Council of Engineering Companies, and American Society of Civil Engineers. All rights reserved.

words “furnish,” “install,” “perform,” or “provide,” then Contractor shall furnish and install said services, materials, or equipment complete and ready for intended use.

F. *Contract Price or Contract Times*: References to a change in “Contract Price or Contract Times” or “Contract Times or Contract Price” or similar, indicate that such change applies to (1) Contract Price, (2) Contract Times, or (3) both Contract Price and Contract Times, as warranted, even if the term “or both” is not expressed.

G. Unless stated otherwise in the Contract Documents, words or phrases that have a well-known technical or construction industry or trade meaning are used in the Contract Documents in accordance with such recognized meaning.

ARTICLE 2—PRELIMINARY MATTERS

2.01 *Delivery of Performance and Payment Bonds; Evidence of Insurance*

A. *Performance and Payment Bonds*: When Contractor delivers the signed counterparts of the Agreement to Owner, Contractor shall also deliver to Owner the performance bond and payment bond (if the Contract requires Contractor to furnish such bonds).

B. *Evidence of Contractor’s Insurance*: When Contractor delivers the signed counterparts of the Agreement to Owner, Contractor shall also deliver to Owner, with copies to each additional insured (as identified in the Contract), the certificates, endorsements, and other evidence of insurance required to be provided by Contractor in accordance with Article 6, except to the extent the Supplementary Conditions expressly establish other dates for delivery of specific insurance policies.

C. *Evidence of Owner’s Insurance*: After receipt of the signed counterparts of the Agreement and all required bonds and insurance documentation, Owner shall promptly deliver to Contractor, with copies to each additional insured (as identified in the Contract), the certificates and other evidence of insurance required to be provided by Owner under Article 6.

2.02 *Copies of Documents*

A. Owner shall furnish to Contractor four printed copies of the Contract (including one fully signed counterpart of the Agreement), and one copy in electronic portable document format (PDF). Additional printed copies will be furnished upon request at the cost of reproduction.

B. Owner shall maintain and safeguard at least one original printed record version of the Contract, including Drawings and Specifications signed and sealed by Engineer and other design professionals. Owner shall make such original printed record version of the Contract available to Contractor for review. Owner may delegate the responsibilities under this provision to Engineer.

2.03 *Before Starting Construction*

A. *Preliminary Schedules*: Within 10 days after the Effective Date of the Contract (or as otherwise required by the Contract Documents), Contractor shall submit to Engineer for timely review:

1. a preliminary Progress Schedule indicating the times (numbers of days or dates) for starting and completing the various stages of the Work, including any Milestones specified in the Contract;

Copyright© 2018 National Society of Professional Engineers, American Council of Engineering Companies, and American Society of Civil Engineers. All rights reserved.

2. a preliminary Schedule of Submittals; and

3. a preliminary Schedule of Values for all of the Work which includes quantities and prices of items which when added together equal the Contract Price and subdivides the Work into component parts in sufficient detail to serve as the basis for progress payments during performance of the Work. Such prices will include an appropriate amount of overhead and profit applicable to each item of Work.

2.04 *Preconstruction Conference; Designation of Authorized Representatives*

A. Before any Work at the Site is started, a conference attended by Owner, Contractor, Engineer, and others as appropriate will be held to establish a working understanding among the parties as to the Work, and to discuss the schedules referred to in Paragraph 2.03.A, procedures for handling Shop Drawings, Samples, and other Submittals, processing Applications for Payment, electronic or digital transmittals, and maintaining required records.

B. At this conference Owner and Contractor each shall designate, in writing, a specific individual to act as its authorized representative with respect to the services and responsibilities under the Contract. Such individuals shall have the authority to transmit and receive information, render decisions relative to the Contract, and otherwise act on behalf of each respective party.

2.05 *Acceptance of Schedules*

A. At least 10 days before submission of the first Application for Payment a conference, attended by Contractor, Engineer, and others as appropriate, will be held to review the schedules submitted in accordance with Paragraph 2.03.A. No progress payment will be made to Contractor until acceptable schedules are submitted to Engineer.

1. The Progress Schedule will be acceptable to Engineer if it provides an orderly progression of the Work to completion within the Contract Times. Such acceptance will not impose on Engineer responsibility for the Progress Schedule, for sequencing, scheduling, or progress of the Work, nor interfere with or relieve Contractor from Contractor's full responsibility therefor.

2. Contractor's Schedule of Submittals will be acceptable to Engineer if it provides a workable arrangement for reviewing and processing the required submittals.

3. Contractor's Schedule of Values will be acceptable to Engineer as to form and substance if it provides a reasonable allocation of the Contract Price to the component parts of the Work.

4. If a schedule is not acceptable, Contractor will have an additional 10 days to revise and resubmit the schedule.

2.06 *Electronic Transmittals*

A. Except as otherwise stated elsewhere in the Contract, the Owner, Engineer, and Contractor may send, and shall accept, Electronic Documents transmitted by Electronic Means.

B. If the Contract does not establish protocols for Electronic Means, then Owner, Engineer, and Contractor shall jointly develop such protocols.

C. Subject to any governing protocols for Electronic Means, when transmitting Electronic Documents by Electronic Means, the transmitting party makes no representations as to

Copyright© 2018 National Society of Professional Engineers, American Council of Engineering Companies, and American Society of Civil Engineers. All rights reserved.

long-term compatibility, usability, or readability of the Electronic Documents resulting from the recipient's use of software application packages, operating systems, or computer hardware differing from those used in the drafting or transmittal of the Electronic Documents.

ARTICLE 3—CONTRACT DOCUMENTS: INTENT, REQUIREMENTS, REUSE

3.01 *Intent*

A. The Contract Documents are complementary; what is required by one Contract Document is as binding as if required by all.

B. It is the intent of the Contract Documents to describe a functionally complete Project (or part thereof) to be constructed in accordance with the Contract Documents.

C. Unless otherwise stated in the Contract Documents, if there is a discrepancy between the electronic versions of the Contract Documents (including any printed copies derived from such electronic versions) and the printed record version, the printed record version will govern.

D. The Contract supersedes prior negotiations, representations, and agreements, whether written or oral.

E. Engineer will issue clarifications and interpretations of the Contract Documents as provided herein.

F. Any provision or part of the Contract Documents held to be void or unenforceable under any Law or Regulation will be deemed stricken, and all remaining provisions will continue to be valid and binding upon Owner and Contractor, which agree that the Contract Documents will be reformed to replace such stricken provision or part thereof with a valid and enforceable provision that comes as close as possible to expressing the intention of the stricken provision.

G. Nothing in the Contract Documents creates:

1. any contractual relationship between Owner or Engineer and any Subcontractor, Supplier, or other individual or entity performing or furnishing any of the Work, for the benefit of such Subcontractor, Supplier, or other individual or entity; or

2. any obligation on the part of Owner or Engineer to pay or to see to the payment of any money due any such Subcontractor, Supplier, or other individual or entity, except as may otherwise be required by Laws and Regulations.

3.02 *Reference Standards*

A. *Standards Specifications, Codes, Laws and Regulations*

1. Reference in the Contract Documents to standard specifications, manuals, reference standards, or codes of any technical society, organization, or association, or to Laws or Regulations, whether such reference be specific or by implication, means the standard specification, manual, reference standard, code, or Laws or Regulations in effect at the time of opening of Bids (or on the Effective Date of the Contract if there were no Bids), except as may be otherwise specifically stated in the Contract Documents.

Copyright© 2018 National Society of Professional Engineers, American Council of Engineering Companies, and American Society of Civil Engineers. All rights reserved.

2. No provision of any such standard specification, manual, reference standard, or code, and no instruction of a Supplier, will be effective to change the duties or responsibilities of Owner, Contractor, or Engineer from those set forth in the part of the Contract Documents prepared by or for Engineer. No such provision or instruction shall be effective to assign to Owner or Engineer any duty or authority to supervise or direct the performance of the Work, or any duty or authority to undertake responsibility inconsistent with the provisions of the part of the Contract Documents prepared by or for Engineer.

3.03 *Reporting and Resolving Discrepancies*

A. *Reporting Discrepancies*

1. *Contractor's Verification of Figures and Field Measurements*: Before undertaking each part of the Work, Contractor shall carefully study the Contract Documents, and check and verify pertinent figures and dimensions therein, particularly with respect to applicable field measurements. Contractor shall promptly report in writing to Engineer any conflict, error, ambiguity, or discrepancy that Contractor discovers, or has actual knowledge of, and shall not proceed with any Work affected thereby until the conflict, error, ambiguity, or discrepancy is resolved by a clarification or interpretation by Engineer, or by an amendment or supplement to the Contract issued pursuant to Paragraph 11.01.

2. *Contractor's Review of Contract Documents*: If, before or during the performance of the Work, Contractor discovers any conflict, error, ambiguity, or discrepancy within the Contract Documents, or between the Contract Documents and (a) any applicable Law or Regulation, (b) actual field conditions, (c) any standard specification, manual, reference standard, or code, or (d) any instruction of any Supplier, then Contractor shall promptly report it to Engineer in writing. Contractor shall not proceed with the Work affected thereby (except in an emergency as required by Paragraph 7.15) until the conflict, error, ambiguity, or discrepancy is resolved, by a clarification or interpretation by Engineer, or by an amendment or supplement to the Contract issued pursuant to Paragraph 11.01.

3. Contractor shall not be liable to Owner or Engineer for failure to report any conflict, error, ambiguity, or discrepancy in the Contract Documents unless Contractor had actual knowledge thereof.

B. *Resolving Discrepancies*

1. Except as may be otherwise specifically stated in the Contract Documents, the provisions of the part of the Contract Documents prepared by or for Engineer take precedence in resolving any conflict, error, ambiguity, or discrepancy between such provisions of the Contract Documents and:

   a. the provisions of any standard specification, manual, reference standard, or code, or the instruction of any Supplier (whether or not specifically incorporated by reference as a Contract Document); or

   b. the provisions of any Laws or Regulations applicable to the performance of the Work (unless such an interpretation of the provisions of the Contract Documents would result in violation of such Law or Regulation).

Copyright© 2018 National Society of Professional Engineers, American Council of Engineering Companies, and American Society of Civil Engineers. All rights reserved.

3.04 *Requirements of the Contract Documents*

A. During the performance of the Work and until final payment, Contractor and Owner shall submit to the Engineer in writing all matters in question concerning the requirements of the Contract Documents (sometimes referred to as requests for information or interpretation—RFIs), or relating to the acceptability of the Work under the Contract Documents, as soon as possible after such matters arise. Engineer will be the initial interpreter of the requirements of the Contract Documents, and judge of the acceptability of the Work.

B. Engineer will, with reasonable promptness, render a written clarification, interpretation, or decision on the issue submitted, or initiate an amendment or supplement to the Contract Documents. Engineer's written clarification, interpretation, or decision will be final and binding on Contractor, unless it appeals by submitting a Change Proposal, and on Owner, unless it appeals by filing a Claim.

C. If a submitted matter in question concerns terms and conditions of the Contract Documents that do not involve (1) the performance or acceptability of the Work under the Contract Documents, (2) the design (as set forth in the Drawings, Specifications, or otherwise), or (3) other engineering or technical matters, then Engineer will promptly notify Owner and Contractor in writing that Engineer is unable to provide a decision or interpretation. If Owner and Contractor are unable to agree on resolution of such a matter in question, either party may pursue resolution as provided in Article 12.

3.05 *Reuse of Documents*

A. Contractor and its Subcontractors and Suppliers shall not:

1. have or acquire any title to or ownership rights in any of the Drawings, Specifications, or other documents (or copies of any thereof) prepared by or bearing the seal of Engineer or its consultants, including electronic media versions, or reuse any such Drawings, Specifications, other documents, or copies thereof on extensions of the Project or any other project without written consent of Owner and Engineer and specific written verification or adaptation by Engineer; or

2. have or acquire any title or ownership rights in any other Contract Documents, reuse any such Contract Documents for any purpose without Owner's express written consent, or violate any copyrights pertaining to such Contract Documents.

B. The prohibitions of this Paragraph 3.05 will survive final payment, or termination of the Contract. Nothing herein precludes Contractor from retaining copies of the Contract Documents for record purposes.

ARTICLE 4—COMMENCEMENT AND PROGRESS OF THE WORK

4.01 *Commencement of Contract Times; Notice to Proceed*

A. The Contract Times will commence to run on the 30th day after the Effective Date of the Contract or, if a Notice to Proceed is given, on the day indicated in the Notice to Proceed. A Notice to Proceed may be given at any time within 30 days after the Effective Date of the Contract. In no event will the Contract Times commence to run later than the 60th day after the day of Bid opening or the 30th day after the Effective Date of the Contract, whichever date is earlier.

Copyright© 2018 National Society of Professional Engineers, American Council of Engineering Companies, and American Society of Civil Engineers. All rights reserved.

4.02 *Starting the Work*

A. Contractor shall start to perform the Work on the date when the Contract Times commence to run. No Work may be done at the Site prior to such date.

4.03 *Reference Points*

A. Owner shall provide engineering surveys to establish reference points for construction which in Engineer's judgment are necessary to enable Contractor to proceed with the Work. Contractor shall be responsible for laying out the Work, shall protect and preserve the established reference points and property monuments, and shall make no changes or relocations without the prior written approval of Owner. Contractor shall report to Engineer whenever any reference point or property monument is lost or destroyed or requires relocation because of necessary changes in grades or locations, and shall be responsible for the accurate replacement or relocation of such reference points or property monuments by professionally qualified personnel.

4.04 *Progress Schedule*

A. Contractor shall adhere to the Progress Schedule established in accordance with Paragraph 2.05 as it may be adjusted from time to time as provided below.

1. Contractor shall submit to Engineer for acceptance (to the extent indicated in Paragraph 2.05) proposed adjustments in the Progress Schedule that will not result in changing the Contract Times.

2. Proposed adjustments in the Progress Schedule that will change the Contract Times must be submitted in accordance with the requirements of Article 11.

B. Contractor shall carry on the Work and adhere to the Progress Schedule during all disputes or disagreements with Owner. No Work will be delayed or postponed pending resolution of any disputes or disagreements, or during any appeal process, except as permitted by Paragraph 16.04, or as Owner and Contractor may otherwise agree in writing.

4.05 *Delays in Contractor's Progress*

A. If Owner, Engineer, or anyone for whom Owner is responsible, delays, disrupts, or interferes with the performance or progress of the Work, then Contractor shall be entitled to an equitable adjustment in Contract Price or Contract Times.

B. Contractor shall not be entitled to an adjustment in Contract Price or Contract Times for delay, disruption, or interference caused by or within the control of Contractor. Delay, disruption, and interference attributable to and within the control of a Subcontractor or Supplier shall be deemed to be within the control of Contractor.

C. If Contractor's performance or progress is delayed, disrupted, or interfered with by unanticipated causes not the fault of and beyond the control of Owner, Contractor, and those for which they are responsible, then Contractor shall be entitled to an equitable adjustment in Contract Times. Such an adjustment will be Contractor's sole and exclusive remedy for the delays, disruption, and interference described in this paragraph. Causes of delay, disruption, or interference that may give rise to an adjustment in Contract Times under this paragraph include but are not limited to the following:

1. Severe and unavoidable natural catastrophes such as fires, floods, epidemics, and earthquakes;

Copyright© 2018 National Society of Professional Engineers, American Council of Engineering Companies, and American Society of Civil Engineers. All rights reserved.

2. Abnormal weather conditions;

3. Acts or failures to act of third-party utility owners or other third-party entities (other than those third-party utility owners or other third-party entities performing other work at or adjacent to the Site as arranged by or under contract with Owner, as contemplated in Article 8); and

4. Acts of war or terrorism.

D. Contractor's entitlement to an adjustment of Contract Times or Contract Price is limited as follows:

1. Contractor's entitlement to an adjustment of the Contract Times is conditioned on the delay, disruption, or interference adversely affecting an activity on the critical path to completion of the Work, as of the time of the delay, disruption, or interference.

2. Contractor shall not be entitled to an adjustment in Contract Price for any delay, disruption, or interference if such delay is concurrent with a delay, disruption, or interference caused by or within the control of Contractor. Such a concurrent delay by Contractor shall not preclude an adjustment of Contract Times to which Contractor is otherwise entitled.

3. Adjustments of Contract Times or Contract Price are subject to the provisions of Article 11.

E. Each Contractor request or Change Proposal seeking an increase in Contract Times or Contract Price must be supplemented by supporting data that sets forth in detail the following:

1. The circumstances that form the basis for the requested adjustment;

2. The date upon which each cause of delay, disruption, or interference began to affect the progress of the Work;

3. The date upon which each cause of delay, disruption, or interference ceased to affect the progress of the Work;

4. The number of days' increase in Contract Times claimed as a consequence of each such cause of delay, disruption, or interference; and

5. The impact on Contract Price, in accordance with the provisions of Paragraph 11.07.

Contractor shall also furnish such additional supporting documentation as Owner or Engineer may require including, where appropriate, a revised progress schedule indicating all the activities affected by the delay, disruption, or interference, and an explanation of the effect of the delay, disruption, or interference on the critical path to completion of the Work.

F. Delays, disruption, and interference to the performance or progress of the Work resulting from the existence of a differing subsurface or physical condition, an Underground Facility that was not shown or indicated by the Contract Documents, or not shown or indicated with reasonable accuracy, and those resulting from Hazardous Environmental Conditions, are governed by Article 5, together with the provisions of Paragraphs 4.05.D and 4.05.E.

G. Paragraph 8.03 addresses delays, disruption, and interference to the performance or progress of the Work resulting from the performance of certain other work at or adjacent to the Site.

Copyright© 2018 National Society of Professional Engineers, American Council of Engineering Companies, and American Society of Civil Engineers. All rights reserved.

ARTICLE 5—SITE; SUBSURFACE AND PHYSICAL CONDITIONS; HAZARDOUS ENVIRONMENTAL CONDITIONS

5.01 *Availability of Lands*

A. Owner shall furnish the Site. Owner shall notify Contractor in writing of any encumbrances or restrictions not of general application but specifically related to use of the Site with which Contractor must comply in performing the Work.

B. Upon reasonable written request, Owner shall furnish Contractor with a current statement of record legal title and legal description of the lands upon which permanent improvements are to be made and Owner's interest therein as necessary for giving notice of or filing a mechanic's or construction lien against such lands in accordance with applicable Laws and Regulations.

C. Contractor shall provide for all additional lands and access thereto that may be required for temporary construction facilities or storage of materials and equipment.

5.02 *Use of Site and Other Areas*

A. *Limitation on Use of Site and Other Areas*

1. Contractor shall confine construction equipment, temporary construction facilities, the storage of materials and equipment, and the operations of workers to the Site, adjacent areas that Contractor has arranged to use through construction easements or otherwise, and other adjacent areas permitted by Laws and Regulations, and shall not unreasonably encumber the Site and such other adjacent areas with construction equipment or other materials or equipment. Contractor shall assume full responsibility for (a) damage to the Site; (b) damage to any such other adjacent areas used for Contractor's operations; (c) damage to any other adjacent land or areas, or to improvements, structures, utilities, or similar facilities located at such adjacent lands or areas; and (d) for injuries and losses sustained by the owners or occupants of any such land or areas; provided that such damage or injuries result from the performance of the Work or from other actions or conduct of the Contractor or those for which Contractor is responsible.

2. If a damage or injury claim is made by the owner or occupant of any such land or area because of the performance of the Work, or because of other actions or conduct of the Contractor or those for which Contractor is responsible, Contractor shall (a) take immediate corrective or remedial action as required by Paragraph 7.13, or otherwise; (b) promptly attempt to settle the claim as to all parties through negotiations with such owner or occupant, or otherwise resolve the claim by arbitration or other dispute resolution proceeding, or in a court of competent jurisdiction; and (c) to the fullest extent permitted by Laws and Regulations, indemnify and hold harmless Owner and Engineer, and the officers, directors, members, partners, employees, agents, consultants and subcontractors of each and any of them, from and against any such claim, and against all costs, losses, and damages (including but not limited to all fees and charges of engineers, architects, attorneys, and other professionals and all court or arbitration or other dispute resolution costs) arising out of or relating to any claim or action, legal or equitable, brought by any such owner or occupant against Owner, Engineer, or any other party indemnified hereunder to the extent caused directly or indirectly, in whole or in part by, or based upon, Contractor's performance of the Work,

Copyright© 2018 National Society of Professional Engineers, American Council of Engineering Companies, and American Society of Civil Engineers. All rights reserved.

or because of other actions or conduct of the Contractor or those for which Contractor is responsible.

B. *Removal of Debris During Performance of the Work*: During the progress of the Work the Contractor shall keep the Site and other adjacent areas free from accumulations of waste materials, rubbish, and other debris. Removal and disposal of such waste materials, rubbish, and other debris will conform to applicable Laws and Regulations.

C. *Cleaning*: Prior to Substantial Completion of the Work Contractor shall clean the Site and the Work and make it ready for utilization by Owner. At the completion of the Work Contractor shall remove from the Site and adjacent areas all tools, appliances, construction equipment and machinery, and surplus materials and shall restore to original condition all property not designated for alteration by the Contract Documents.

D. *Loading of Structures*: Contractor shall not load nor permit any part of any structure to be loaded in any manner that will endanger the structure, nor shall Contractor subject any part of the Work or adjacent structures or land to stresses or pressures that will endanger them.

5.03 *Subsurface and Physical Conditions*

A. *Reports and Drawings*: The Supplementary Conditions identify:

1. Those reports of explorations and tests of subsurface conditions at or adjacent to the Site that contain Technical Data;

2. Those drawings of existing physical conditions at or adjacent to the Site, including those drawings depicting existing surface or subsurface structures at or adjacent to the Site (except Underground Facilities), that contain Technical Data; and

3. Technical Data contained in such reports and drawings.

B. *Underground Facilities*: Underground Facilities are shown or indicated on the Drawings, pursuant to Paragraph 5.05, and not in the drawings referred to in Paragraph 5.03.A. Information and data regarding the presence or location of Underground Facilities are not intended to be categorized, identified, or defined as Technical Data.

C. *Reliance by Contractor on Technical Data*: Contractor may rely upon the accuracy of the Technical Data expressly identified in the Supplementary Conditions with respect to such reports and drawings, but such reports and drawings are not Contract Documents. If no such express identification has been made, then Contractor may rely upon the accuracy of the Technical Data as defined in Paragraph 1.01.A.46.b.

D. *Limitations of Other Data and Documents*: Except for such reliance on Technical Data, Contractor may not rely upon or make any claim against Owner or Engineer, or any of their officers, directors, members, partners, employees, agents, consultants, or subcontractors, with respect to:

1. the completeness of such reports and drawings for Contractor's purposes, including, but not limited to, any aspects of the means, methods, techniques, sequences, and procedures of construction to be employed by Contractor, and safety precautions and programs incident thereto;

2. other data, interpretations, opinions, and information contained in such reports or shown or indicated in such drawings;

Copyright© 2018 National Society of Professional Engineers, American Council of Engineering Companies, and American Society of Civil Engineers. All rights reserved.

3. the contents of other Site-related documents made available to Contractor, such as record drawings from other projects at or adjacent to the Site, or Owner's archival documents concerning the Site; or

4. any Contractor interpretation of or conclusion drawn from any Technical Data or any such other data, interpretations, opinions, or information.

5.04 *Differing Subsurface or Physical Conditions*

A. *Notice by Contractor*: If Contractor believes that any subsurface or physical condition that is uncovered or revealed at the Site:

1. is of such a nature as to establish that any Technical Data on which Contractor is entitled to rely as provided in Paragraph 5.03 is materially inaccurate;

2. is of such a nature as to require a change in the Drawings or Specifications;

3. differs materially from that shown or indicated in the Contract Documents; or

4. is of an unusual nature, and differs materially from conditions ordinarily encountered and generally recognized as inherent in work of the character provided for in the Contract Documents;

then Contractor shall, promptly after becoming aware thereof and before further disturbing the subsurface or physical conditions or performing any Work in connection therewith (except in an emergency as required by Paragraph 7.15), notify Owner and Engineer in writing about such condition. Contractor shall not further disturb such condition or perform any Work in connection therewith (except with respect to an emergency) until receipt of a written statement permitting Contractor to do so.

B. *Engineer's Review*: After receipt of written notice as required by the preceding paragraph, Engineer will promptly review the subsurface or physical condition in question; determine whether it is necessary for Owner to obtain additional exploration or tests with respect to the condition; conclude whether the condition falls within any one or more of the differing site condition categories in Paragraph 5.04.A; obtain any pertinent cost or schedule information from Contractor; prepare recommendations to Owner regarding the Contractor's resumption of Work in connection with the subsurface or physical condition in question and the need for any change in the Drawings or Specifications; and advise Owner in writing of Engineer's findings, conclusions, and recommendations.

C. *Owner's Statement to Contractor Regarding Site Condition*: After receipt of Engineer's written findings, conclusions, and recommendations, Owner shall issue a written statement to Contractor (with a copy to Engineer) regarding the subsurface or physical condition in question, addressing the resumption of Work in connection with such condition, indicating whether any change in the Drawings or Specifications will be made, and adopting or rejecting Engineer's written findings, conclusions, and recommendations, in whole or in part.

D. *Early Resumption of Work*: If at any time Engineer determines that Work in connection with the subsurface or physical condition in question may resume prior to completion of Engineer's review or Owner's issuance of its statement to Contractor, because the condition in question has been adequately documented, and analyzed on a preliminary basis, then the Engineer may at its discretion instruct Contractor to resume such Work.

Copyright© 2018 National Society of Professional Engineers, American Council of Engineering Companies, and American Society of Civil Engineers. All rights reserved.

E. *Possible Price and Times Adjustments*

1. Contractor shall be entitled to an equitable adjustment in Contract Price or Contract Times, to the extent that the existence of a differing subsurface or physical condition, or any related delay, disruption, or interference, causes an increase or decrease in Contractor's cost of, or time required for, performance of the Work; subject, however, to the following:

    a. Such condition must fall within any one or more of the categories described in Paragraph 5.04.A;

    b. With respect to Work that is paid for on a unit price basis, any adjustment in Contract Price will be subject to the provisions of Paragraph 13.03; and,

    c. Contractor's entitlement to an adjustment of the Contract Times is subject to the provisions of Paragraphs 4.05.D and 4.05.E.

2. Contractor shall not be entitled to any adjustment in the Contract Price or Contract Times with respect to a subsurface or physical condition if:

    a. Contractor knew of the existence of such condition at the time Contractor made a commitment to Owner with respect to Contract Price and Contract Times by the submission of a Bid or becoming bound under a negotiated contract, or otherwise;

    b. The existence of such condition reasonably could have been discovered or revealed as a result of any examination, investigation, exploration, test, or study of the Site and contiguous areas expressly required by the Bidding Requirements or Contract Documents to be conducted by or for Contractor prior to Contractor's making such commitment; or

    c. Contractor failed to give the written notice required by Paragraph 5.04.A.

3. If Owner and Contractor agree regarding Contractor's entitlement to and the amount or extent of any adjustment in the Contract Price or Contract Times, then any such adjustment will be set forth in a Change Order.

4. Contractor may submit a Change Proposal regarding its entitlement to or the amount or extent of any adjustment in the Contract Price or Contract Times, no later than 30 days after Owner's issuance of the Owner's written statement to Contractor regarding the subsurface or physical condition in question.

F. *Underground Facilities; Hazardous Environmental Conditions*: Paragraph 5.05 governs rights and responsibilities regarding the presence or location of Underground Facilities. Paragraph 5.06 governs rights and responsibilities regarding Hazardous Environmental Conditions. The provisions of Paragraphs 5.03 and 5.04 are not applicable to the presence or location of Underground Facilities, or to Hazardous Environmental Conditions.

5.05 *Underground Facilities*

A. *Contractor's Responsibilities*: Unless it is otherwise expressly provided in the Supplementary Conditions, the cost of all of the following are included in the Contract Price, and Contractor shall have full responsibility for:

1. reviewing and checking all information and data regarding existing Underground Facilities at the Site;

Copyright© 2018 National Society of Professional Engineers, American Council of Engineering Companies, and American Society of Civil Engineers. All rights reserved.

2. complying with applicable state and local utility damage prevention Laws and Regulations;

3. verifying the actual location of those Underground Facilities shown or indicated in the Contract Documents as being within the area affected by the Work, by exposing such Underground Facilities during the course of construction;

4. coordination of the Work with the owners (including Owner) of such Underground Facilities, during construction; and

5. the safety and protection of all existing Underground Facilities at the Site, and repairing any damage thereto resulting from the Work.

B. *Notice by Contractor*: If Contractor believes that an Underground Facility that is uncovered or revealed at the Site was not shown or indicated on the Drawings, or was not shown or indicated on the Drawings with reasonable accuracy, then Contractor shall, promptly after becoming aware thereof and before further disturbing conditions affected thereby or performing any Work in connection therewith (except in an emergency as required by Paragraph 7.15), notify Owner and Engineer in writing regarding such Underground Facility.

C. *Engineer's Review*: Engineer will:

1. promptly review the Underground Facility and conclude whether such Underground Facility was not shown or indicated on the Drawings, or was not shown or indicated with reasonable accuracy;

2. identify and communicate with the owner of the Underground Facility; prepare recommendations to Owner (and if necessary issue any preliminary instructions to Contractor) regarding the Contractor's resumption of Work in connection with the Underground Facility in question;

3. obtain any pertinent cost or schedule information from Contractor; determine the extent, if any, to which a change is required in the Drawings or Specifications to reflect and document the consequences of the existence or location of the Underground Facility; and

4. advise Owner in writing of Engineer's findings, conclusions, and recommendations.

During such time, Contractor shall be responsible for the safety and protection of such Underground Facility.

D. *Owner's Statement to Contractor Regarding Underground Facility*: After receipt of Engineer's written findings, conclusions, and recommendations, Owner shall issue a written statement to Contractor (with a copy to Engineer) regarding the Underground Facility in question addressing the resumption of Work in connection with such Underground Facility, indicating whether any change in the Drawings or Specifications will be made, and adopting or rejecting Engineer's written findings, conclusions, and recommendations in whole or in part.

E. *Early Resumption of Work*: If at any time Engineer determines that Work in connection with the Underground Facility may resume prior to completion of Engineer's review or Owner's issuance of its statement to Contractor, because the Underground Facility in question and conditions affected by its presence have been adequately documented, and analyzed on a preliminary basis, then the Engineer may at its discretion instruct Contractor to resume such Work.

Copyright© 2018 National Society of Professional Engineers, American Council of Engineering Companies, and American Society of Civil Engineers. All rights reserved.

F. *Possible Price and Times Adjustments*

1. Contractor shall be entitled to an equitable adjustment in the Contract Price or Contract Times, to the extent that any existing Underground Facility at the Site that was not shown or indicated on the Drawings, or was not shown or indicated with reasonable accuracy, or any related delay, disruption, or interference, causes an increase or decrease in Contractor's cost of, or time required for, performance of the Work; subject, however, to the following:

    a. With respect to Work that is paid for on a unit price basis, any adjustment in Contract Price will be subject to the provisions of Paragraph 13.03;

    b. Contractor's entitlement to an adjustment of the Contract Times is subject to the provisions of Paragraphs 4.05.D and 4.05.E; and

    c. Contractor gave the notice required in Paragraph 5.05.B.

2. If Owner and Contractor agree regarding Contractor's entitlement to and the amount or extent of any adjustment in the Contract Price or Contract Times, then any such adjustment will be set forth in a Change Order.

3. Contractor may submit a Change Proposal regarding its entitlement to or the amount or extent of any adjustment in the Contract Price or Contract Times, no later than 30 days after Owner's issuance of the Owner's written statement to Contractor regarding the Underground Facility in question.

4. The information and data shown or indicated on the Drawings with respect to existing Underground Facilities at the Site is based on information and data (a) furnished by the owners of such Underground Facilities, or by others, (b) obtained from available records, or (c) gathered in an investigation conducted in accordance with the current edition of ASCE 38, Standard Guideline for the Collection and Depiction of Existing Subsurface Utility Data, by the American Society of Civil Engineers. If such information or data is incorrect or incomplete, Contractor's remedies are limited to those set forth in this Paragraph 5.05.F.

5.06 *Hazardous Environmental Conditions at Site*

A. A. *Reports and Drawings*: The Supplementary Conditions identify:

1. those reports known to Owner relating to Hazardous Environmental Conditions that have been identified at or adjacent to the Site;

2. drawings known to Owner relating to Hazardous Environmental Conditions that have been identified at or adjacent to the Site; and

3. Technical Data contained in such reports and drawings.

B. *Reliance by Contractor on Technical Data Authorized*: Contractor may rely upon the accuracy of the Technical Data expressly identified in the Supplementary Conditions with respect to such reports and drawings, but such reports and drawings are not Contract Documents. If no such express identification has been made, then Contractor may rely on the accuracy of the Technical Data as defined in Paragraph 1.01.A.46.b. Except for such reliance on Technical Data, Contractor may not rely upon or make any claim against Owner

Copyright© 2018 National Society of Professional Engineers, American Council of Engineering Companies, and American Society of Civil Engineers. All rights reserved.

or Engineer, or any of their officers, directors, members, partners, employees, agents, consultants, or subcontractors, with respect to:

1. the completeness of such reports and drawings for Contractor's purposes, including, but not limited to, any aspects of the means, methods, techniques, sequences and procedures of construction to be employed by Contractor, and safety precautions and programs incident thereto;
2. other data, interpretations, opinions, and information contained in such reports or shown or indicated in such drawings; or
3. any Contractor interpretation of or conclusion drawn from any Technical Data or any such other data, interpretations, opinions or information.

C. Contractor shall not be responsible for removing or remediating any Hazardous Environmental Condition encountered, uncovered, or revealed at the Site unless such removal or remediation is expressly identified in the Contract Documents to be within the scope of the Work.

D. Contractor shall be responsible for controlling, containing, and duly removing all Constituents of Concern brought to the Site by Contractor, Subcontractors, Suppliers, or anyone else for whom Contractor is responsible, and for any associated costs; and for the costs of removing and remediating any Hazardous Environmental Condition created by the presence of any such Constituents of Concern.

E. If Contractor encounters, uncovers, or reveals a Hazardous Environmental Condition whose removal or remediation is not expressly identified in the Contract Documents as being within the scope of the Work, or if Contractor or anyone for whom Contractor is responsible creates a Hazardous Environmental Condition, then Contractor shall immediately: (1) secure or otherwise isolate such condition; (2) stop all Work in connection with such condition and in any area affected thereby (except in an emergency as required by Paragraph 7.15); and (3) notify Owner and Engineer (and promptly thereafter confirm such notice in writing). Owner shall promptly consult with Engineer concerning the necessity for Owner to retain a qualified expert to evaluate such condition or take corrective action, if any. Promptly after consulting with Engineer, Owner shall take such actions as are necessary to permit Owner to timely obtain required permits and provide Contractor the written notice required by Paragraph 5.06.F. If Contractor or anyone for whom Contractor is responsible created the Hazardous Environmental Condition in question, then Owner may remove and remediate the Hazardous Environmental Condition, and impose a set-off against payments to account for the associated costs.

F. Contractor shall not resume Work in connection with such Hazardous Environmental Condition or in any affected area until after Owner has obtained any required permits related thereto, and delivered written notice to Contractor either (1) specifying that such condition and any affected area is or has been rendered safe for the resumption of Work, or (2) specifying any special conditions under which such Work may be resumed safely.

G. If Owner and Contractor cannot agree as to entitlement to or on the amount or extent, if any, of any adjustment in Contract Price or Contract Times, as a result of such Work stoppage, such special conditions under which Work is agreed to be resumed by Contractor, or any costs or expenses incurred in response to the Hazardous Environmental Condition, then within 30 days of Owner's written notice regarding the resumption of Work, Contractor may

Copyright© 2018 National Society of Professional Engineers, American Council of Engineering Companies, and American Society of Civil Engineers. All rights reserved.

submit a Change Proposal, or Owner may impose a set-off. Entitlement to any such adjustment is subject to the provisions of Paragraphs 4.05.D, 4.05.E, 11.07, and 11.08.

H. If, after receipt of such written notice, Contractor does not agree to resume such Work based on a reasonable belief it is unsafe, or does not agree to resume such Work under such special conditions, then Owner may order the portion of the Work that is in the area affected by such condition to be deleted from the Work, following the contractual change procedures in Article 11. Owner may have such deleted portion of the Work performed by Owner's own forces or others in accordance with Article 8.

I. To the fullest extent permitted by Laws and Regulations, Owner shall indemnify and hold harmless Contractor, Subcontractors, and Engineer, and the officers, directors, members, partners, employees, agents, consultants, and subcontractors of each and any of them, from and against all claims, costs, losses, and damages (including but not limited to all fees and charges of engineers, architects, attorneys, and other professionals, and all court, arbitration, or other dispute resolution costs) arising out of or relating to a Hazardous Environmental Condition, provided that such Hazardous Environmental Condition (1) was not shown or indicated in the Drawings, Specifications, or other Contract Documents, identified as Technical Data entitled to limited reliance pursuant to Paragraph 5.06.B, or identified in the Contract Documents to be included within the scope of the Work, and (2) was not created by Contractor or by anyone for whom Contractor is responsible. Nothing in this Paragraph 5.06.I obligates Owner to indemnify any individual or entity from and against the consequences of that individual's or entity's own negligence.

J. To the fullest extent permitted by Laws and Regulations, Contractor shall indemnify and hold harmless Owner and Engineer, and the officers, directors, members, partners, employees, agents, consultants, and subcontractors of each and any of them, from and against all claims, costs, losses, and damages (including but not limited to all fees and charges of engineers, architects, attorneys, and other professionals and all court or arbitration or other dispute resolution costs) arising out of or relating to the failure to control, contain, or remove a Constituent of Concern brought to the Site by Contractor or by anyone for whom Contractor is responsible, or to a Hazardous Environmental Condition created by Contractor or by anyone for whom Contractor is responsible. Nothing in this Paragraph 5.06.J obligates Contractor to indemnify any individual or entity from and against the consequences of that individual's or entity's own negligence.

K. The provisions of Paragraphs 5.03, 5.04, and 5.05 do not apply to the presence of Constituents of Concern or to a Hazardous Environmental Condition uncovered or revealed at the Site.

ARTICLE 6—BONDS AND INSURANCE

6.01 *Performance, Payment, and Other Bonds*

A. Contractor shall furnish a performance bond and a payment bond, each in an amount at least equal to the Contract Price, as security for the faithful performance and payment of Contractor's obligations under the Contract. These bonds must remain in effect until one year after the date when final payment becomes due or until completion of the correction period specified in Paragraph 15.08, whichever is later, except as provided otherwise by Laws or Regulations, the terms of a prescribed bond form, the Supplementary Conditions, or other provisions of the Contract.

Copyright© 2018 National Society of Professional Engineers, American Council of Engineering Companies, and American Society of Civil Engineers. All rights reserved.

B. Contractor shall also furnish such other bonds (if any) as are required by the Supplementary Conditions or other provisions of the Contract.

C. All bonds must be in the form included in the Bidding Documents or otherwise specified by Owner prior to execution of the Contract, except as provided otherwise by Laws or Regulations, and must be issued and signed by a surety named in "Companies Holding Certificates of Authority as Acceptable Sureties on Federal Bonds and as Acceptable Reinsuring Companies" as published in Department Circular 570 (as amended and supplemented) by the Bureau of the Fiscal Service, U.S. Department of the Treasury. A bond signed by an agent or attorney-in-fact must be accompanied by a certified copy of that individual's authority to bind the surety. The evidence of authority must show that it is effective on the date the agent or attorney-in-fact signed the accompanying bond.

D. Contractor shall obtain the required bonds from surety companies that are duly licensed or authorized, in the state or jurisdiction in which the Project is located, to issue bonds in the required amounts.

E. If the surety on a bond furnished by Contractor is declared bankrupt or becomes insolvent, or the surety ceases to meet the requirements above, then Contractor shall promptly notify Owner and Engineer in writing and shall, within 20 days after the event giving rise to such notification, provide another bond and surety, both of which must comply with the bond and surety requirements above.

F. If Contractor has failed to obtain a required bond, Owner may exclude the Contractor from the Site and exercise Owner's termination rights under Article 16.

G. Upon request to Owner from any Subcontractor, Supplier, or other person or entity claiming to have furnished labor, services, materials, or equipment used in the performance of the Work, Owner shall provide a copy of the payment bond to such person or entity.

H. Upon request to Contractor from any Subcontractor, Supplier, or other person or entity claiming to have furnished labor, services, materials, or equipment used in the performance of the Work, Contractor shall provide a copy of the payment bond to such person or entity.

6.02 *Insurance—General Provisions*

A. Owner and Contractor shall obtain and maintain insurance as required in this article and in the Supplementary Conditions.

B. All insurance required by the Contract to be purchased and maintained by Owner or Contractor shall be obtained from insurance companies that are duly licensed or authorized in the state or jurisdiction in which the Project is located to issue insurance policies for the required limits and coverages. Unless a different standard is indicated in the Supplementary Conditions, all companies that provide insurance policies required under this Contract shall have an A.M. Best rating of A-VII or better.

C. Alternative forms of insurance coverage, including but not limited to self-insurance and "Occupational Accident and Excess Employer's Indemnity Policies," are not sufficient to meet the insurance requirements of this Contract, unless expressly allowed in the Supplementary Conditions.

D. Contractor shall deliver to Owner, with copies to each additional insured identified in the Contract, certificates of insurance and endorsements establishing that Contractor has obtained and is maintaining the policies and coverages required by the Contract. Upon request by Owner or any other insured, Contractor shall also furnish other evidence of such

Copyright© 2018 National Society of Professional Engineers, American Council of Engineering Companies, and American Society of Civil Engineers. All rights reserved.

required insurance, including but not limited to copies of policies, documentation of applicable self-insured retentions (if allowed) and deductibles, full disclosure of all relevant exclusions, and evidence of insurance required to be purchased and maintained by Subcontractors or Suppliers. In any documentation furnished under this provision, Contractor, Subcontractors, and Suppliers may block out (redact) (1) any confidential premium or pricing information and (2) any wording specific to a project or jurisdiction other than those applicable to this Contract.

E. Owner shall deliver to Contractor, with copies to each additional insured identified in the Contract, certificates of insurance and endorsements establishing that Owner has obtained and is maintaining the policies and coverages required of Owner by the Contract (if any). Upon request by Contractor or any other insured, Owner shall also provide other evidence of such required insurance (if any), including but not limited to copies of policies, documentation of applicable self-insured retentions (if allowed) and deductibles, and full disclosure of all relevant exclusions. In any documentation furnished under this provision, Owner may block out (redact) (1) any confidential premium or pricing information and (2) any wording specific to a project or jurisdiction other than those relevant to this Contract.

F. Failure of Owner or Contractor to demand such certificates or other evidence of the other party's full compliance with these insurance requirements, or failure of Owner or Contractor to identify a deficiency in compliance from the evidence provided, will not be construed as a waiver of the other party's obligation to obtain and maintain such insurance.

G. In addition to the liability insurance required to be provided by Contractor, the Owner, at Owner's option, may purchase and maintain Owner's own liability insurance. Owner's liability policies, if any, operate separately and independently from policies required to be provided by Contractor, and Contractor cannot rely upon Owner's liability policies for any of Contractor's obligations to the Owner, Engineer, or third parties.

H. Contractor shall require:

1. Subcontractors to purchase and maintain worker's compensation, commercial general liability, and other insurance that is appropriate for their participation in the Project, and to name as additional insureds Owner and Engineer (and any other individuals or entities identified in the Supplementary Conditions as additional insureds on Contractor's liability policies) on each Subcontractor's commercial general liability insurance policy; and

2. Suppliers to purchase and maintain insurance that is appropriate for their participation in the Project.

I. If either party does not purchase or maintain the insurance required of such party by the Contract, such party shall notify the other party in writing of such failure to purchase prior to the start of the Work, or of such failure to maintain prior to any change in the required coverage.

J. If Contractor has failed to obtain and maintain required insurance, Contractor's entitlement to enter or remain at the Site will end immediately, and Owner may impose an appropriate set-off against payment for any associated costs (including but not limited to the cost of purchasing necessary insurance coverage), and exercise Owner's termination rights under Article 16.

Copyright© 2018 National Society of Professional Engineers, American Council of Engineering Companies, and American Society of Civil Engineers. All rights reserved.

K. Without prejudice to any other right or remedy, if a party has failed to obtain required insurance, the other party may elect (but is in no way obligated) to obtain equivalent insurance to protect such other party's interests at the expense of the party who was required to provide such coverage, and the Contract Price will be adjusted accordingly.

L. Owner does not represent that insurance coverage and limits established in this Contract necessarily will be adequate to protect Contractor or Contractor's interests. Contractor is responsible for determining whether such coverage and limits are adequate to protect its interests, and for obtaining and maintaining any additional insurance that Contractor deems necessary.

M. The insurance and insurance limits required herein will not be deemed as a limitation on Contractor's liability, or that of its Subcontractors or Suppliers, under the indemnities granted to Owner and other individuals and entities in the Contract or otherwise.

N. All the policies of insurance required to be purchased and maintained under this Contract will contain a provision or endorsement that the coverage afforded will not be canceled, or renewal refused, until at least 10 days prior written notice has been given to the purchasing policyholder. Within three days of receipt of any such written notice, the purchasing policyholder shall provide a copy of the notice to each other insured and Engineer.

6.03 *Contractor's Insurance*

A. *Required Insurance*: Contractor shall purchase and maintain Worker's Compensation, Commercial General Liability, and other insurance pursuant to the specific requirements of the Supplementary Conditions.

B. *General Provisions*: The policies of insurance required by this Paragraph 6.03 as supplemented must:

1. include at least the specific coverages required;

2. be written for not less than the limits provided, or those required by Laws or Regulations, whichever is greater;

3. remain in effect at least until the Work is complete (as set forth in Paragraph 15.06.D), and longer if expressly required elsewhere in this Contract, and at all times thereafter when Contractor may be correcting, removing, or replacing defective Work as a warranty or correction obligation, or otherwise, or returning to the Site to conduct other tasks arising from the Contract;

4. apply with respect to the performance of the Work, whether such performance is by Contractor, any Subcontractor or Supplier, or by anyone directly or indirectly employed by any of them to perform any of the Work, or by anyone for whose acts any of them may be liable; and

5. include all necessary endorsements to support the stated requirements.

C. *Additional Insureds*: The Contractor's commercial general liability, automobile liability, employer's liability, umbrella or excess, pollution liability, and unmanned aerial vehicle liability policies, if required by this Contract, must:

1. include and list as additional insureds Owner and Engineer, and any individuals or entities identified as additional insureds in the Supplementary Conditions;

Copyright© 2018 National Society of Professional Engineers, American Council of Engineering Companies, and American Society of Civil Engineers. All rights reserved.

2. include coverage for the respective officers, directors, members, partners, employees, and consultants of all such additional insureds;

3. afford primary coverage to these additional insureds for all claims covered thereby (including as applicable those arising from both ongoing and completed operations);

4. not seek contribution from insurance maintained by the additional insured; and

5. as to commercial general liability insurance, apply to additional insureds with respect to liability caused in whole or in part by Contractor's acts or omissions, or the acts and omissions of those working on Contractor's behalf, in the performance of Contractor's operations.

6.04 *Builder's Risk and Other Property Insurance*

A. *Builder's Risk*: Unless otherwise provided in the Supplementary Conditions, Contractor shall purchase and maintain builder's risk insurance upon the Work on a completed value basis, in the amount of the Work's full insurable replacement cost (subject to such deductible amounts as may be provided in the Supplementary Conditions or required by Laws and Regulations). The specific requirements applicable to the builder's risk insurance are set forth in the Supplementary Conditions.

B. *Property Insurance for Facilities of Owner Where Work Will Occur*: Owner is responsible for obtaining and maintaining property insurance covering each existing structure, building, or facility in which any part of the Work will occur, or to which any part of the Work will attach or be adjoined. Such property insurance will be written on a special perils (all-risk) form, on a replacement cost basis, providing coverage consistent with that required for the builder's risk insurance, and will be maintained until the Work is complete, as set forth in Paragraph 15.06.D.

C. *Property Insurance for Substantially Complete Facilities*: Promptly after Substantial Completion, and before actual occupancy or use of the substantially completed Work, Owner will obtain property insurance for such substantially completed Work, and maintain such property insurance at least until the Work is complete, as set forth in Paragraph 15.06.D. Such property insurance will be written on a special perils (all-risk) form, on a replacement cost basis, and provide coverage consistent with that required for the builder's risk insurance. The builder's risk insurance may terminate upon written confirmation of Owner's procurement of such property insurance.

D. *Partial Occupancy or Use by Owner*: If Owner will occupy or use a portion or portions of the Work prior to Substantial Completion of all the Work, as provided in Paragraph 15.04, then Owner (directly, if it is the purchaser of the builder's risk policy, or through Contractor) will provide advance notice of such occupancy or use to the builder's risk insurer, and obtain an endorsement consenting to the continuation of coverage prior to commencing such partial occupancy or use.

E. *Insurance of Other Property; Additional Insurance*: If the express insurance provisions of the Contract do not require or address the insurance of a property item or interest, then the entity or individual owning such property item will be responsible for insuring it. If Contractor elects to obtain other special insurance to be included in or supplement the builder's risk or property insurance policies provided under this Paragraph 6.04, it may do so at Contractor's expense.

Copyright© 2018 National Society of Professional Engineers, American Council of Engineering Companies, and American Society of Civil Engineers. All rights reserved.

6.05 *Property Losses; Subrogation*

A. The builder's risk insurance policy purchased and maintained in accordance with Paragraph 6.04 (or an installation floater policy if authorized by the Supplementary Conditions), will contain provisions to the effect that in the event of payment of any loss or damage the insurer will have no rights of recovery against any insureds thereunder, or against Engineer or its consultants, or their officers, directors, members, partners, employees, agents, consultants, or subcontractors.

1. Owner and Contractor waive all rights against each other and the respective officers, directors, members, partners, employees, agents, consultants, and subcontractors of each and any of them, for all losses and damages caused by, arising out of, or resulting from any of the perils, risks, or causes of loss covered by such policies and any other property insurance applicable to the Work; and, in addition, waive all such rights against Engineer, its consultants, all individuals or entities identified in the Supplementary Conditions as builder's risk or installation floater insureds, and the officers, directors, members, partners, employees, agents, consultants, and subcontractors of each and any of them, under such policies for losses and damages so caused.

2. None of the above waivers extends to the rights that any party making such waiver may have to the proceeds of insurance held by Owner or Contractor as trustee or fiduciary, or otherwise payable under any policy so issued.

B. Any property insurance policy maintained by Owner covering any loss, damage, or consequential loss to Owner's existing structures, buildings, or facilities in which any part of the Work will occur, or to which any part of the Work will attach or adjoin; to adjacent structures, buildings, or facilities of Owner; or to part or all of the completed or substantially completed Work, during partial occupancy or use pursuant to Paragraph 15.04, after Substantial Completion pursuant to Paragraph 15.03, or after final payment pursuant to Paragraph 15.06, will contain provisions to the effect that in the event of payment of any loss or damage the insurer will have no rights of recovery against any insureds thereunder, or against Contractor, Subcontractors, or Engineer, or the officers, directors, members, partners, employees, agents, consultants, or subcontractors of each and any of them, and that the insured is allowed to waive the insurer's rights of subrogation in a written contract executed prior to the loss, damage, or consequential loss.

1. Owner waives all rights against Contractor, Subcontractors, and Engineer, and the officers, directors, members, partners, employees, agents, consultants and subcontractors of each and any of them, for all losses and damages caused by, arising out of, or resulting from fire or any of the perils, risks, or causes of loss covered by such policies.

C. The waivers in this Paragraph 6.05 include the waiver of rights due to business interruption, loss of use, or other consequential loss extending beyond direct physical loss or damage to Owner's property or the Work caused by, arising out of, or resulting from fire or other insured peril, risk, or cause of loss.

D. Contractor shall be responsible for assuring that each Subcontract contains provisions whereby the Subcontractor waives all rights against Owner, Contractor, all individuals or entities identified in the Supplementary Conditions as insureds, the Engineer and its consultants, and the officers, directors, members, partners, employees, agents,

Copyright© 2018 National Society of Professional Engineers, American Council of Engineering Companies, and American Society of Civil Engineers. All rights reserved.

consultants, and subcontractors of each and any of them, for all losses and damages caused by, arising out of, relating to, or resulting from fire or other peril, risk, or cause of loss covered by builder's risk insurance, installation floater, and any other property insurance applicable to the Work.

6.06 *Receipt and Application of Property Insurance Proceeds*

A. Any insured loss under the builder's risk and other policies of property insurance required by Paragraph 6.04 will be adjusted and settled with the named insured that purchased the policy. Such named insured shall act as fiduciary for the other insureds, and give notice to such other insureds that adjustment and settlement of a claim is in progress. Any other insured may state its position regarding a claim for insured loss in writing within 15 days after notice of such claim.

B. Proceeds for such insured losses may be made payable by the insurer either jointly to multiple insureds, or to the named insured that purchased the policy in its own right and as fiduciary for other insureds, subject to the requirements of any applicable mortgage clause. A named insured receiving insurance proceeds under the builder's risk and other policies of insurance required by Paragraph 6.04 shall maintain such proceeds in a segregated account, and distribute such proceeds in accordance with such agreement as the parties in interest may reach, or as otherwise required under the dispute resolution provisions of this Contract or applicable Laws and Regulations.

C. If no other special agreement is reached, Contractor shall repair or replace the damaged Work, using allocated insurance proceeds.

ARTICLE 7—CONTRACTOR'S RESPONSIBILITIES

7.01 *Contractor's Means and Methods of Construction*

A. Contractor shall be solely responsible for the means, methods, techniques, sequences, and procedures of construction.

B. If the Contract Documents note, or Contractor determines, that professional engineering or other design services are needed to carry out Contractor's responsibilities for construction means, methods, techniques, sequences, and procedures, or for Site safety, then Contractor shall cause such services to be provided by a properly licensed design professional, at Contractor's expense. Such services are not Owner-delegated professional design services under this Contract, and neither Owner nor Engineer has any responsibility with respect to (1) Contractor's determination of the need for such services, (2) the qualifications or licensing of the design professionals retained or employed by Contractor, (3) the performance of such services, or (4) any errors, omissions, or defects in such services.

7.02 *Supervision and Superintendence*

A. Contractor shall supervise, inspect, and direct the Work competently and efficiently, devoting such attention thereto and applying such skills and expertise as may be necessary to perform the Work in accordance with the Contract Documents.

B. At all times during the progress of the Work, Contractor shall assign a competent resident superintendent who will not be replaced without written notice to Owner and Engineer except under extraordinary circumstances.

Copyright© 2018 National Society of Professional Engineers, American Council of Engineering Companies, and American Society of Civil Engineers. All rights reserved.

7.03 *Labor; Working Hours*

A. Contractor shall provide competent, suitably qualified personnel to survey and lay out the Work and perform construction as required by the Contract Documents. Contractor shall maintain good discipline and order at the Site.

B. Contractor shall be fully responsible to Owner and Engineer for all acts and omissions of Contractor's employees; of Suppliers and Subcontractors, and their employees; and of any other individuals or entities performing or furnishing any of the Work, just as Contractor is responsible for Contractor's own acts and omissions.

C. Except as otherwise required for the safety or protection of persons or the Work or property at the Site or adjacent thereto, and except as otherwise stated in the Contract Documents, all Work at the Site will be performed during regular working hours, Monday through Friday. Contractor will not perform Work on a Saturday, Sunday, or any legal holiday. Contractor may perform Work outside regular working hours or on Saturdays, Sundays, or legal holidays only with Owner's written consent, which will not be unreasonably withheld.

7.04 *Services, Materials, and Equipment*

A. Unless otherwise specified in the Contract Documents, Contractor shall provide and assume full responsibility for all services, materials, equipment, labor, transportation, construction equipment and machinery, tools, appliances, fuel, power, light, heat, telephone, water, sanitary facilities, temporary facilities, and all other facilities and incidentals necessary for the performance, testing, start up, and completion of the Work, whether or not such items are specifically called for in the Contract Documents.

B. All materials and equipment incorporated into the Work must be new and of good quality, except as otherwise provided in the Contract Documents. All special warranties and guarantees required by the Specifications will expressly run to the benefit of Owner. If required by Engineer, Contractor shall furnish satisfactory evidence (including reports of required tests) as to the source, kind, and quality of materials and equipment.

C. All materials and equipment must be stored, applied, installed, connected, erected, protected, used, cleaned, and conditioned in accordance with instructions of the applicable Supplier, except as otherwise may be provided in the Contract Documents.

7.05 *"Or Equals"*

A. *Contractor's Request; Governing Criteria*: Whenever an item of equipment or material is specified or described in the Contract Documents by using the names of one or more proprietary items or specific Suppliers, the Contract Price has been based upon Contractor furnishing such item as specified. The specification or description of such an item is intended to establish the type, function, appearance, and quality required. Unless the specification or description contains or is followed by words reading that no like, equivalent, or "or equal" item is permitted, Contractor may request that Engineer authorize the use of other items of equipment or material, or items from other proposed Suppliers, under the circumstances described below.

1. If Engineer in its sole discretion determines that an item of equipment or material proposed by Contractor is functionally equal to that named and sufficiently similar so that no change in related Work will be required, Engineer will deem it an "or equal" item.

Copyright© 2018 National Society of Professional Engineers, American Council of Engineering Companies, and American Society of Civil Engineers. All rights reserved.

For the purposes of this paragraph, a proposed item of equipment or material will be considered functionally equal to an item so named if:

a. in the exercise of reasonable judgment Engineer determines that the proposed item:

1) is at least equal in materials of construction, quality, durability, appearance, strength, and design characteristics;

2) will reliably perform at least equally well the function and achieve the results imposed by the design concept of the completed Project as a functioning whole;

3) has a proven record of performance and availability of responsive service; and

4) is not objectionable to Owner.

b. Contractor certifies that, if the proposed item is approved and incorporated into the Work:

1) there will be no increase in cost to the Owner or increase in Contract Times; and

2) the item will conform substantially to the detailed requirements of the item named in the Contract Documents.

B. *Contractor's Expense*: Contractor shall provide all data in support of any proposed "or equal" item at Contractor's expense.

C. *Engineer's Evaluation and Determination*: Engineer will be allowed a reasonable time to evaluate each "or-equal" request. Engineer may require Contractor to furnish additional data about the proposed "or-equal" item. Engineer will be the sole judge of acceptability. No "or-equal" item will be ordered, furnished, installed, or utilized until Engineer's review is complete and Engineer determines that the proposed item is an "or-equal," which will be evidenced by an approved Shop Drawing or other written communication. Engineer will advise Contractor in writing of any negative determination.

D. *Effect of Engineer's Determination*: Neither approval nor denial of an "or-equal" request will result in any change in Contract Price. The Engineer's denial of an "or-equal" request will be final and binding, and may not be reversed through an appeal under any provision of the Contract.

E. *Treatment as a Substitution Request*: If Engineer determines that an item of equipment or material proposed by Contractor does not qualify as an "or-equal" item, Contractor may request that Engineer consider the item a proposed substitute pursuant to Paragraph 7.06.

7.06 *Substitutes*

A. *Contractor's Request; Governing Criteria*: Unless the specification or description of an item of equipment or material required to be furnished under the Contract Documents contains or is followed by words reading that no substitution is permitted, Contractor may request that Engineer authorize the use of other items of equipment or material under the circumstances described below. To the extent possible such requests must be made before commencement of related construction at the Site.

Copyright© 2018 National Society of Professional Engineers, American Council of Engineering Companies, and American Society of Civil Engineers. All rights reserved.

1. Contractor shall submit sufficient information as provided below to allow Engineer to determine if the item of material or equipment proposed is functionally equivalent to that named and an acceptable substitute therefor. Engineer will not accept requests for review of proposed substitute items of equipment or material from anyone other than Contractor.
2. The requirements for review by Engineer will be as set forth in Paragraph 7.06.B, as supplemented by the Specifications, and as Engineer may decide is appropriate under the circumstances.
3. Contractor shall make written application to Engineer for review of a proposed substitute item of equipment or material that Contractor seeks to furnish or use. The application:
    a. will certify that the proposed substitute item will:
        1) perform adequately the functions and achieve the results called for by the general design;
        2) be similar in substance to the item specified; and
        3) be suited to the same use as the item specified.
    b. b. will state:
        1) the extent, if any, to which the use of the proposed substitute item will necessitate a change in Contract Times;
        2) whether use of the proposed substitute item in the Work will require a change in any of the Contract Documents (or in the provisions of any other direct contract with Owner for other work on the Project) to adapt the design to the proposed substitute item; and
        3) whether incorporation or use of the proposed substitute item in connection with the Work is subject to payment of any license fee or royalty.
    c. will identify:
        1) all variations of the proposed substitute item from the item specified; and
        2) available engineering, sales, maintenance, repair, and replacement services.
    d. will contain an itemized estimate of all costs or credits that will result directly or indirectly from use of such substitute item, including but not limited to changes in Contract Price, shared savings, costs of redesign, and claims of other contractors affected by any resulting change.

B. *Engineer's Evaluation and Determination*: Engineer will be allowed a reasonable time to evaluate each substitute request, and to obtain comments and direction from Owner. Engineer may require Contractor to furnish additional data about the proposed substitute item. Engineer will be the sole judge of acceptability. No substitute will be ordered, furnished, installed, or utilized until Engineer's review is complete and Engineer determines that the proposed item is an acceptable substitute. Engineer's determination will be evidenced by a Field Order or a proposed Change Order accounting for the substitution itself and all related impacts, including changes in Contract Price or Contract Times. Engineer will advise Contractor in writing of any negative determination.

Copyright© 2018 National Society of Professional Engineers, American Council of Engineering Companies, and American Society of Civil Engineers. All rights reserved.

C. *Special Guarantee*: Owner may require Contractor to furnish at Contractor's expense a special performance guarantee or other surety with respect to any substitute.

D. *Reimbursement of Engineer's Cost*: Engineer will record Engineer's costs in evaluating a substitute proposed or submitted by Contractor. Whether or not Engineer approves a substitute so proposed or submitted by Contractor, Contractor shall reimburse Owner for the reasonable charges of Engineer for evaluating each such proposed substitute. Contractor shall also reimburse Owner for the reasonable charges of Engineer for making changes in the Contract Documents (or in the provisions of any other direct contract with Owner) resulting from the acceptance of each proposed substitute.

E. *Contractor's Expense*: Contractor shall provide all data in support of any proposed substitute at Contractor's expense.

F. *Effect of Engineer's Determination*: If Engineer approves the substitution request, Contractor shall execute the proposed Change Order and proceed with the substitution. The Engineer's denial of a substitution request will be final and binding, and may not be reversed through an appeal under any provision of the Contract. Contractor may challenge the scope of reimbursement costs imposed under Paragraph 7.06.D, by timely submittal of a Change Proposal.

7.07 *Concerning Subcontractors and Suppliers*

A. Contractor may retain Subcontractors and Suppliers for the performance of parts of the Work. Such Subcontractors and Suppliers must be acceptable to Owner. The Contractor's retention of a Subcontractor or Supplier for the performance of parts of the Work will not relieve Contractor's obligation to Owner to perform and complete the Work in accordance with the Contract Documents.

B. Contractor shall retain specific Subcontractors and Suppliers for the performance of designated parts of the Work if required by the Contract to do so.

C. Subsequent to the submittal of Contractor's Bid or final negotiation of the terms of the Contract, Owner may not require Contractor to retain any Subcontractor or Supplier to furnish or perform any of the Work against which Contractor has reasonable objection.

D. Prior to entry into any binding subcontract or purchase order, Contractor shall submit to Owner the identity of the proposed Subcontractor or Supplier ~~(unless Owner has already deemed such proposed Subcontractor or Supplier acceptable~~ during the bidding process ~~or otherwise~~. Such proposed Subcontractor or Supplier shall be deemed acceptable to Owner unless Owner raises a substantive, reasonable objection ~~within 5 days~~.

E. Substitution of subcontractors is allowed for the following reasons: (1) if the subcontractor fails or refuses to execute a written contract with the Contractor; (2) when the subcontractor becomes bankrupt or insolvent prior to execution of a contract with the Contractor; (3) when the Owner refuses to approve the subcontractor; (4) when the subcontractor fails or refuses to perform his contract with the Contractor; (5) when the Contractor inadvertently listed the wrong name of the subcontractor; (6) when a bid alternate accepted by the Owner causes the listed subcontractor to not be the low bidder; (7) When the subcontractors bid is incomplete; (8) when the listed subcontractor fails or refuses to meet the bond requirement of the Contractor; (9) when the listed subcontractor does not have the proper license to perform the work; or (10) when the listed subcontractor is not registered with Workforce Solutions.

Copyright© 2018 National Society of Professional Engineers, American Council of Engineering Companies, and American Society of Civil Engineers. All rights reserved.

F. The Owner shall notify the subcontractor, in writing by certified mail, and the subcontractor shall have five (5) working days to submit written objections to the substitution to the Owner. If the subcontractor responds with objections, then the Owner shall give at least five (5) working days' notice for a hearing.

G. The Contractor shall not permit any subcontract to be voluntarily assigned or transferred or allow it to be performed by anyone other than the original subcontractor listed in the original bid without the consent of the Owner. Contractor shall not sublet or subcontract any portion of the work in excess of the listing threshold without the use of a change order unless: (1) the Contractor failed to receive a bid for a category or work and has designated on the subcontractors list that "no bid" was received; (2) the Contractor fails to receive more than one bid for a category of work and has stated that only one bid has been received. These designations shall not occur more than one time on the subcontractors list.

~~H. Owner may require the replacement of any Subcontractor or Supplier. Owner also may require Contractor to retain specific replacements; provided, however, that Owner may not require a replacement to which Contractor has a reasonable objection. If Contractor has submitted the identity of certain Subcontractors or Suppliers for acceptance by Owner, and Owner has accepted it (either in writing or by failing to make written objection thereto), then Owner may subsequently revoke the acceptance of any such Subcontractor or Supplier so identified solely on the basis of substantive, reasonable objection after due investigation. Contractor shall submit an acceptable replacement for the rejected Subcontractor or Supplier.~~

H. If Owner requires the replacement of any Subcontractor or Supplier retained by Contractor to perform any part of the Work, then Contractor shall be entitled to an adjustment in Contract Price or Contract Times, with respect to the replacement; and Contractor shall initiate a Change Proposal for such adjustment within 30 days of Owner's requirement of replacement.

I. No acceptance by Owner of any such Subcontractor or Supplier, whether initially or as a replacement, will constitute a waiver of the right of Owner to the completion of the Work in accordance with the Contract Documents.

J. On a monthly basis, Contractor shall submit to Engineer a complete list of all Subcontractors and Suppliers having a direct contract with Contractor, and of all other Subcontractors and Suppliers known to Contractor at the time of submittal.

K. Contractor shall be solely responsible for scheduling and coordinating the work of Subcontractors and Suppliers.

L. Consistent with NMSA 1978, sec.13-4-34, the divisions and sections of the Specifications and the identifications of any Drawings do not control Contractor in dividing the Work among Subcontractors or Suppliers, or in delineating the Work to be performed by any specific trade.

M. All Work performed for Contractor by a Subcontractor or Supplier must be pursuant to an appropriate contractual agreement that specifically binds the Subcontractor or Supplier to the applicable terms and conditions of the Contract for the benefit of Owner and Engineer.

N. Owner may furnish to any Subcontractor or Supplier, to the extent practicable, information about amounts paid to Contractor for Work performed for Contractor by the Subcontractor or Supplier.

Copyright© 2018 National Society of Professional Engineers, American Council of Engineering Companies, and American Society of Civil Engineers. All rights reserved.

O. Contractor shall restrict all Subcontractors and Suppliers from communicating with Engineer or Owner, except through Contractor or in case of an emergency, or as otherwise expressly allowed in this Contract.

7.08 *Patent Fees and Royalties*

A. Contractor shall pay all license fees and royalties and assume all costs incident to the use in the performance of the Work or the incorporation in the Work of any invention, design, process, product, or device which is the subject of patent rights or copyrights held by others. If an invention, design, process, product, or device is specified in the Contract Documents for use in the performance of the Work and if, to the actual knowledge of Owner or Engineer, its use is subject to patent rights or copyrights calling for the payment of any license fee or royalty to others, the existence of such rights will be disclosed in the Contract Documents.

B. To the fullest extent permitted by Laws and Regulations, Owner shall indemnify and hold harmless Contractor, and its officers, directors, members, partners, employees, agents, consultants, and subcontractors, from and against all claims, costs, losses, and damages (including but not limited to all fees and charges of engineers, architects, attorneys, and other professionals, and all court or arbitration or other dispute resolution costs) arising out of or relating to any infringement of patent rights or copyrights incident to the use in the performance of the Work or resulting from the incorporation in the Work of any invention, design, process, product, or device specified in the Contract Documents, but not identified as being subject to payment of any license fee or royalty to others required by patent rights or copyrights.

C. To the fullest extent permitted by Laws and Regulations, Contractor shall indemnify and hold harmless Owner and Engineer, and the officers, directors, members, partners, employees, agents, consultants and subcontractors of each and any of them, from and against all claims, costs, losses, and damages (including but not limited to all fees and charges of engineers, architects, attorneys, and other professionals and all court or arbitration or other dispute resolution costs) arising out of or relating to any infringement of patent rights or copyrights incident to the use in the performance of the Work or resulting from the incorporation in the Work of any invention, design, process, product, or device not specified in the Contract Documents.

7.09 *Permits*

A. Unless otherwise provided in the Contract Documents, Contractor shall obtain and pay for all construction permits, licenses, and certificates of occupancy. Owner shall assist Contractor, when necessary, in obtaining such permits and licenses. Contractor shall pay all governmental charges and inspection fees necessary for the prosecution of the Work which are applicable at the time of the submission of Contractor's Bid (or when Contractor became bound under a negotiated contract). Owner shall pay all charges of utility owners for connections for providing permanent service to the Work.

7.10 *Taxes*

A. Contractor shall pay all sales, consumer, use, and other similar taxes required to be paid by Contractor in accordance with the Laws and Regulations of the place of the Project which are applicable during the performance of the Work.

Copyright© 2018 National Society of Professional Engineers, American Council of Engineering Companies, and American Society of Civil Engineers. All rights reserved.

7.11 *Laws and Regulations*

A. Contractor shall give all notices required by and shall comply with all Laws and Regulations applicable to the performance of the Work. Neither Owner nor Engineer shall be responsible for monitoring Contractor's compliance with any Laws or Regulations.

B. If Contractor performs any Work or takes any other action knowing or having reason to know that it is contrary to Laws or Regulations, Contractor shall bear all resulting costs and losses, and shall indemnify and hold harmless Owner and Engineer, and the officers, directors, members, partners, employees, agents, consultants, and subcontractors of each and any of them, from and against all claims, costs, losses, and damages (including but not limited to all fees and charges of engineers, architects, attorneys, and other professionals and all court or arbitration or other dispute resolution costs) arising out of or relating to such Work or other action. It is not Contractor's responsibility to make certain that the Work described in the Contract Documents is in accordance with Laws and Regulations, but this does not relieve Contractor of its obligations under Paragraph 3.03.

C. Owner or Contractor may give written notice to the other party of any changes after the submission of Contractor's Bid (or after the date when Contractor became bound under a negotiated contract) in Laws or Regulations having an effect on the cost or time of performance of the Work, including but not limited to changes in Laws or Regulations having an effect on procuring permits and on sales, use, value-added, consumption, and other similar taxes. If Owner and Contractor are unable to agree on entitlement to or on the amount or extent, if any, of any adjustment in Contract Price or Contract Times resulting from such changes, then within 30 days of such written notice Contractor may submit a Change Proposal, or Owner may initiate a Claim.

7.12 *Record Documents*

A. Contractor shall maintain in a safe place at the Site one printed record copy of all Drawings, Specifications, Addenda, Change Orders, Work Change Directives, Field Orders, written interpretations and clarifications, and approved Shop Drawings. Contractor shall keep such record documents in good order and annotate them to show changes made during construction. These record documents, together with all approved Samples, will be available to Engineer for reference. Upon completion of the Work, Contractor shall deliver these record documents to Engineer.

7.13 *Safety and Protection*

A. Contractor shall be solely responsible for initiating, maintaining, and supervising all safety precautions and programs in connection with the Work. Such responsibility does not relieve Subcontractors of their responsibility for the safety of persons or property in the performance of their work, nor for compliance with applicable safety Laws and Regulations.

B. Contractor shall designate a qualified and experienced safety representative whose duties and responsibilities are the prevention of Work-related accidents and the maintenance and supervision of safety precautions and programs.

C. Contractor shall take all necessary precautions for the safety of, and shall provide the necessary protection to prevent damage, injury, or loss to:

1. all persons on the Site or who may be affected by the Work;

2. all the Work and materials and equipment to be incorporated therein, whether in storage on or off the Site; and

Copyright© 2018 National Society of Professional Engineers, American Council of Engineering Companies, and American Society of Civil Engineers. All rights reserved.

3. other property at the Site or adjacent thereto, including trees, shrubs, lawns, walks, pavements, roadways, structures, other work in progress, utilities, and Underground Facilities not designated for removal, relocation, or replacement in the course of construction.

D. All damage, injury, or loss to any property referred to in Paragraph 7.13.C.2 or 7.13.C.3 caused, directly or indirectly, in whole or in part, by Contractor, any Subcontractor, Supplier, or any other individual or entity directly or indirectly employed by any of them to perform any of the Work, or anyone for whose acts any of them may be liable, shall be remedied by Contractor at its expense (except damage or loss attributable to the fault of Drawings or Specifications or to the acts or omissions of Owner or Engineer or anyone employed by any of them, or anyone for whose acts any of them may be liable, and not attributable, directly or indirectly, in whole or in part, to the fault or negligence of Contractor or any Subcontractor, Supplier, or other individual or entity directly or indirectly employed by any of them).

E. Contractor shall comply with all applicable Laws and Regulations relating to the safety of persons or property, or to the protection of persons or property from damage, injury, or loss; and shall erect and maintain all necessary safeguards for such safety and protection.

F. Contractor shall notify Owner; the owners of adjacent property; the owners of Underground Facilities and other utilities (if the identity of such owners is known to Contractor); and other contractors and utility owners performing work at or adjacent to the Site, in writing, when Contractor knows that prosecution of the Work may affect them, and shall cooperate with them in the protection, removal, relocation, and replacement of their property or work in progress.

G. Contractor shall comply with the applicable requirements of Owner's safety programs, if any. Any Owner's safety programs that are applicable to the Work are identified or included in the Supplementary Conditions or Specifications.

H. Contractor shall inform Owner and Engineer of the specific requirements of Contractor's safety program with which Owner's and Engineer's employees and representatives must comply while at the Site.

I. Contractor's duties and responsibilities for safety and protection will continue until all the Work is completed, Engineer has issued a written notice to Owner and Contractor in accordance with Paragraph 15.06.C that the Work is acceptable, and Contractor has left the Site (except as otherwise expressly provided in connection with Substantial Completion).

J. Contractor's duties and responsibilities for safety and protection will resume whenever Contractor or any Subcontractor or Supplier returns to the Site to fulfill warranty or correction obligations, or to conduct other tasks arising from the Contract Documents.

7.14 *Hazard Communication Programs*

A. Contractor shall be responsible for coordinating any exchange of safety data sheets (formerly known as material safety data sheets) or other hazard communication information required to be made available to or exchanged between or among employers at the Site in accordance with Laws or Regulations.

7.15 *Emergencies*

A. In emergencies affecting the safety or protection of persons or the Work or property at the Site or adjacent thereto, Contractor is obligated to act to prevent damage, injury, or loss.

Copyright© 2018 National Society of Professional Engineers, American Council of Engineering Companies, and American Society of Civil Engineers. All rights reserved.

Contractor shall give Engineer prompt written notice if Contractor believes that any significant changes in the Work or variations from the Contract Documents have been caused by an emergency, or are required as a result of Contractor's response to an emergency. If Engineer determines that a change in the Contract Documents is required because of an emergency or Contractor's response, a Work Change Directive or Change Order will be issued.

7.16 *Submittals*

A. *Shop Drawing and Sample Requirements*

1. Before submitting a Shop Drawing or Sample, Contractor shall:

a. review and coordinate the Shop Drawing or Sample with other Shop Drawings and Samples and with the requirements of the Work and the Contract Documents;

b. determine and verify:

1) all field measurements, quantities, dimensions, specified performance and design criteria, installation requirements, materials, catalog numbers, and similar information with respect to the Submittal;

2) the suitability of all materials and equipment offered with respect to the indicated application, fabrication, shipping, handling, storage, assembly, and installation pertaining to the performance of the Work; and

3) all information relative to Contractor's responsibilities for means, methods, techniques, sequences, and procedures of construction, and safety precautions and programs incident thereto;

c. confirm that the Submittal is complete with respect to all related data included in the Submittal.

2. Each Shop Drawing or Sample must bear a stamp or specific written certification that Contractor has satisfied Contractor's obligations under the Contract Documents with respect to Contractor's review of that Submittal, and that Contractor approves the Submittal.

3. With each Shop Drawing or Sample, Contractor shall give Engineer specific written notice of any variations that the Submittal may have from the requirements of the Contract Documents. This notice must be set forth in a written communication separate from the Submittal; and, in addition, in the case of a Shop Drawing by a specific notation made on the Shop Drawing itself.

B. *Submittal Procedures for Shop Drawings and Samples*: Contractor shall label and submit Shop Drawings and Samples to Engineer for review and approval in accordance with the accepted Schedule of Submittals.

1. *Shop Drawings*

a. Contractor shall submit the number of copies required in the Specifications.

b. Data shown on the Shop Drawings must be complete with respect to quantities, dimensions, specified performance and design criteria, materials, and similar data to show Engineer the services, materials, and equipment Contractor proposes to provide, and to enable Engineer to review the information for the limited purposes required by Paragraph 7.16.C.

Copyright© 2018 National Society of Professional Engineers, American Council of Engineering Companies, and American Society of Civil Engineers. All rights reserved.

2. *Samples*

    a. Contractor shall submit the number of Samples required in the Specifications.

    b. Contractor shall clearly identify each Sample as to material, Supplier, pertinent data such as catalog numbers, the use for which intended and other data as Engineer may require to enable Engineer to review the Submittal for the limited purposes required by Paragraph 7.16.C.

3. Where a Shop Drawing or Sample is required by the Contract Documents or the Schedule of Submittals, any related Work performed prior to Engineer's review and approval of the pertinent submittal will be at the sole expense and responsibility of Contractor.

C. *Engineer's Review of Shop Drawings and Samples*

1. Engineer will provide timely review of Shop Drawings and Samples in accordance with the accepted Schedule of Submittals. Engineer's review and approval will be only to determine if the items covered by the Submittals will, after installation or incorporation in the Work, comply with the requirements of the Contract Documents, and be compatible with the design concept of the completed Project as a functioning whole as indicated by the Contract Documents.

2. Engineer's review and approval will not extend to means, methods, techniques, sequences, or procedures of construction, or to safety precautions or programs incident thereto.

3. Engineer's review and approval of a separate item as such will not indicate approval of the assembly in which the item functions.

4. Engineer's review and approval of a Shop Drawing or Sample will not relieve Contractor from responsibility for any variation from the requirements of the Contract Documents unless Contractor has complied with the requirements of Paragraph 7.16.A.3 and Engineer has given written approval of each such variation by specific written notation thereof incorporated in or accompanying the Shop Drawing or Sample. Engineer will document any such approved variation from the requirements of the Contract Documents in a Field Order or other appropriate Contract modification.

5. Engineer's review and approval of a Shop Drawing or Sample will not relieve Contractor from responsibility for complying with the requirements of Paragraphs 7.16.A and B.

6. Engineer's review and approval of a Shop Drawing or Sample, or of a variation from the requirements of the Contract Documents, will not, under any circumstances, change the Contract Times or Contract Price, unless such changes are included in a Change Order.

7. Neither Engineer's receipt, review, acceptance, or approval of a Shop Drawing or Sample will result in such item becoming a Contract Document.

8. Contractor shall perform the Work in compliance with the requirements and commitments set forth in approved Shop Drawings and Samples, subject to the provisions of Paragraph 7.16.C.4.

Copyright© 2018 National Society of Professional Engineers, American Council of Engineering Companies, and American Society of Civil Engineers. All rights reserved.

D. *Resubmittal Procedures for Shop Drawings and Samples*

1. Contractor shall make corrections required by Engineer and shall return the required number of corrected copies of Shop Drawings and submit, as required, new Samples for review and approval. Contractor shall direct specific attention in writing to revisions other than the corrections called for by Engineer on previous Submittals.

2. Contractor shall furnish required Shop Drawing and Sample submittals with sufficient information and accuracy to obtain required approval of an item with no more than two resubmittals. Engineer will record Engineer's time for reviewing a third or subsequent resubmittal of a Shop Drawing or Sample, and Contractor shall be responsible for Engineer's charges to Owner for such time. Owner may impose a set-off against payments due Contractor to secure reimbursement for such charges.

3. If Contractor requests a change of a previously approved Shop Drawing or Sample, Contractor shall be responsible for Engineer's charges to Owner for its review time, and Owner may impose a set-off against payments due Contractor to secure reimbursement for such charges, unless the need for such change is beyond the control of Contractor.

E. *Submittals Other than Shop Drawings, Samples, and Owner-Delegated Designs*

1. The following provisions apply to all Submittals other than Shop Drawings, Samples, and Owner-delegated designs:

   a. Contractor shall submit all such Submittals to the Engineer in accordance with the Schedule of Submittals and pursuant to the applicable terms of the Contract Documents.

   b. Engineer will provide timely review of all such Submittals in accordance with the Schedule of Submittals and return such Submittals with a notation of either Accepted or Not Accepted. Any such Submittal that is not returned within the time established in the Schedule of Submittals will be deemed accepted.

   c. Engineer's review will be only to determine if the Submittal is acceptable under the requirements of the Contract Documents as to general form and content of the Submittal.

   d. If any such Submittal is not accepted, Contractor shall confer with Engineer regarding the reason for the non-acceptance, and resubmit an acceptable document.

2. Procedures for the submittal and acceptance of the Progress Schedule, the Schedule of Submittals, and the Schedule of Values are set forth in Paragraphs 2.03. 2.04, and 2.05.

F. Owner-delegated Designs: Submittals pursuant to Owner-delegated designs are governed by the provisions of Paragraph 7.19.

7.17 *Contractor's General Warranty and Guarantee*

A. Contractor warrants and guarantees to Owner that all Work will be in accordance with the Contract Documents and will not be defective. Engineer is entitled to rely on Contractor's warranty and guarantee.

Copyright© 2018 National Society of Professional Engineers, American Council of Engineering Companies, and American Society of Civil Engineers. All rights reserved.

B. Owner's rights under this warranty and guarantee are in addition to, and are not limited by, Owner's rights under the correction period provisions of Paragraph 15.08. The time in which Owner may enforce its warranty and guarantee rights under this Paragraph 7.17 is limited only by applicable Laws and Regulations restricting actions to enforce such rights; provided, however, that after the end of the correction period under Paragraph 15.08:

1. Owner shall give Contractor written notice of any defective Work within 60 days of the discovery that such Work is defective; and

2. Such notice will be deemed the start of an event giving rise to a Claim under Paragraph 12.01.B, such that any related Claim must be brought within 30 days of the notice.

C. Contractor's warranty and guarantee hereunder excludes defects or damage caused by:

1. abuse, or improper modification, maintenance, or operation, by persons other than Contractor, Subcontractors, Suppliers, or any other individual or entity for whom Contractor is responsible; or

2. normal wear and tear under normal usage.

D. Contractor's obligation to perform and complete the Work in accordance with the Contract Documents is absolute. None of the following will constitute an acceptance of Work that is not in accordance with the Contract Documents, a release of Contractor's obligation to perform the Work in accordance with the Contract Documents, or a release of Owner's warranty and guarantee rights under this Paragraph 7.17:

1. Observations by Engineer;

2. Recommendation by Engineer or payment by Owner of any progress or final payment;

3. The issuance of a certificate of Substantial Completion by Engineer or any payment related thereto by Owner;

4. Use or occupancy of the Work or any part thereof by Owner;

5. Any review and approval of a Shop Drawing or Sample submittal;

6. The issuance of a notice of acceptability by Engineer;

7. The end of the correction period established in Paragraph 15.08;

8. Any inspection, test, or approval by others; or

9. Any correction of defective Work by Owner.

E. If the Contract requires the Contractor to accept the assignment of a contract entered into by Owner, then the specific warranties, guarantees, and correction obligations contained in the assigned contract will govern with respect to Contractor's performance obligations to Owner for the Work described in the assigned contract.

7.18 *Indemnification*

A. To the fullest extent permitted by Laws and Regulations, and in addition to any other obligations of Contractor under the Contract or otherwise, Contractor shall indemnify and hold harmless Owner and Engineer, and the officers, directors, members, partners, employees, agents, consultants and subcontractors of each and any of them, from losses, damages, costs, and judgments (including but not limited to all fees and charges of

Copyright© 2018 National Society of Professional Engineers, American Council of Engineering Companies, and American Society of Civil Engineers. All rights reserved.

engineers, architects, attorneys, and other professionals, and all court or arbitration or other dispute resolution costs) arising from third-party claims or actions relating to or resulting from the performance or furnishing of the Work, provided that any such claim, action, loss, cost, judgment or damage is attributable to bodily injury, sickness, disease, or death, or to damage to or destruction of tangible property (other than the Work itself), including the loss of use resulting therefrom, but only to the extent caused by any negligent act or omission of Contractor, any Subcontractor, any Supplier, or any individual or entity directly or indirectly employed by any of them to perform any of the Work, or anyone for whose acts any of them may be liable.

B. In any and all claims against Owner or Engineer, or any of their officers, directors, members, partners, employees, agents, consultants, or subcontractors, by any employee (or the survivor or personal representative of such employee) of Contractor, any Subcontractor, any Supplier, or any individual or entity directly or indirectly employed by any of them to perform any of the Work, or anyone for whose acts any of them may be liable, the indemnification obligation under Paragraph 7.18.A will not be limited in any way by any limitation on the amount or type of damages, compensation, or benefits payable by or for Contractor or any such Subcontractor, Supplier, or other individual or entity under workers' compensation acts, disability benefit acts, or other employee benefit acts.

7.19 *Delegation of Professional Design Services*

A. Owner may require Contractor to provide professional design services for a portion of the Work by express delegation in the Contract Documents. Such delegation will specify the performance and design criteria that such services must satisfy, and the Submittals that Contractor must furnish to Engineer with respect to the Owner-delegated design.

B. Contractor shall cause such Owner-delegated professional design services to be provided pursuant to the professional standard of care by a properly licensed design professional, whose signature and seal must appear on all drawings, calculations, specifications, certifications, and Submittals prepared by such design professional. Such design professional must issue all certifications of design required by Laws and Regulations.

C. If a Shop Drawing or other Submittal related to the Owner-delegated design is prepared by Contractor, a Subcontractor, or others for submittal to Engineer, then such Shop Drawing or other Submittal must bear the written approval of Contractor's design professional when submitted by Contractor to Engineer.

D. Owner and Engineer shall be entitled to rely upon the adequacy, accuracy, and completeness of the services, certifications, and approvals performed or provided by the design professionals retained or employed by Contractor under an Owner-delegated design, subject to the professional standard of care and the performance and design criteria stated in the Contract Documents.

E. Pursuant to this Paragraph 7.19, Engineer's review, approval, and other determinations regarding design drawings, calculations, specifications, certifications, and other Submittals furnished by Contractor pursuant to an Owner-delegated design will be only for the following limited purposes:

1. Checking for conformance with the requirements of this Paragraph 7.19;

2. Confirming that Contractor (through its design professionals) has used the performance and design criteria specified in the Contract Documents; and

Copyright© 2018 National Society of Professional Engineers, American Council of Engineering Companies, and American Society of Civil Engineers. All rights reserved.

3. Establishing that the design furnished by Contractor is consistent with the design concept expressed in the Contract Documents.

F. Contractor shall not be responsible for the adequacy of performance or design criteria specified by Owner or Engineer.

G. Contractor is not required to provide professional services in violation of applicable Laws and Regulations.

ARTICLE 8—OTHER WORK AT THE SITE

8.01 *Other Work*

A. In addition to and apart from the Work under the Contract Documents, the Owner may perform other work at or adjacent to the Site. Such other work may be performed by Owner's employees, or through contracts between the Owner and third parties. Owner may also arrange to have third-party utility owners perform work on their utilities and facilities at or adjacent to the Site.

B. If Owner performs other work at or adjacent to the Site with Owner's employees, or through contracts for such other work, then Owner shall give Contractor written notice thereof prior to starting any such other work. If Owner has advance information regarding the start of any third-party utility work that Owner has arranged to take place at or adjacent to the Site, Owner shall provide such information to Contractor.

C. Contractor shall afford proper and safe access to the Site to each contractor that performs such other work, each utility owner performing other work, and Owner, if Owner is performing other work with Owner's employees, and provide a reasonable opportunity for the introduction and storage of materials and equipment and the execution of such other work.

D. Contractor shall do all cutting, fitting, and patching of the Work that may be required to properly connect or otherwise make its several parts come together and properly integrate with such other work. Contractor shall not endanger any work of others by cutting, excavating, or otherwise altering such work; provided, however, that Contractor may cut or alter others' work with the written consent of Engineer and the others whose work will be affected.

E. If the proper execution or results of any part of Contractor's Work depends upon work performed by others, Contractor shall inspect such other work and promptly report to Engineer in writing any delays, defects, or deficiencies in such other work that render it unavailable or unsuitable for the proper execution and results of Contractor's Work. Contractor's failure to so report will constitute an acceptance of such other work as fit and proper for integration with Contractor's Work except for latent defects and deficiencies in such other work.

F. The provisions of this article are not applicable to work that is performed by third-party utilities or other third-party entities without a contract with Owner, or that is performed without having been arranged by Owner. If such work occurs, then any related delay, disruption, or interference incurred by Contractor is governed by the provisions of Paragraph 4.05.C.3.

Copyright© 2018 National Society of Professional Engineers, American Council of Engineering Companies, and American Society of Civil Engineers. All rights reserved.

8.02 *Coordination*

A. If Owner intends to contract with others for the performance of other work at or adjacent to the Site, to perform other work at or adjacent to the Site with Owner's employees, or to arrange to have utility owners perform work at or adjacent to the Site, the following will be set forth in the Supplementary Conditions or provided to Contractor prior to the start of any such other work:

1. The identity of the individual or entity that will have authority and responsibility for coordination of the activities among the various contractors;

2. An itemization of the specific matters to be covered by such authority and responsibility; and

3. The extent of such authority and responsibilities.

B. Unless otherwise provided in the Supplementary Conditions, Owner shall have sole authority and responsibility for such coordination.

8.03 *Legal Relationships*

A. If, in the course of performing other work for Owner at or adjacent to the Site, the Owner's employees, any other contractor working for Owner, or any utility owner that Owner has arranged to perform work, causes damage to the Work or to the property of Contractor or its Subcontractors, or delays, disrupts, interferes with, or increases the scope or cost of the performance of the Work, through actions or inaction, then Contractor shall be entitled to an equitable adjustment in the Contract Price or the Contract Times. Contractor must submit any Change Proposal seeking an equitable adjustment in the Contract Price or the Contract Times under this paragraph within 30 days of the damaging, delaying, disrupting, or interfering event. The entitlement to, and extent of, any such equitable adjustment will take into account information (if any) regarding such other work that was provided to Contractor in the Contract Documents prior to the submittal of the Bid or the final negotiation of the terms of the Contract, and any remedies available to Contractor under Laws or Regulations concerning utility action or inaction. When applicable, any such equitable adjustment in Contract Price will be conditioned on Contractor assigning to Owner all Contractor's rights against such other contractor or utility owner with respect to the damage, delay, disruption, or interference that is the subject of the adjustment. Contractor's entitlement to an adjustment of the Contract Times or Contract Price is subject to the provisions of Paragraphs 4.05.D and 4.05.E.

B. Contractor shall take reasonable and customary measures to avoid damaging, delaying, disrupting, or interfering with the work of Owner, any other contractor, or any utility owner performing other work at or adjacent to the Site.

1. If Contractor fails to take such measures and as a result damages, delays, disrupts, or interferes with the work of any such other contractor or utility owner, then Owner may impose a set-off against payments due Contractor, and assign to such other contractor or utility owner the Owner's contractual rights against Contractor with respect to the breach of the obligations set forth in this Paragraph 8.03.B.

2. When Owner is performing other work at or adjacent to the Site with Owner's employees, Contractor shall be liable to Owner for damage to such other work, and for the reasonable direct delay, disruption, and interference costs incurred by Owner as a result of Contractor's failure to take reasonable and customary measures with respect

Copyright© 2018 National Society of Professional Engineers, American Council of Engineering Companies, and American Society of Civil Engineers. All rights reserved.

to Owner's other work. In response to such damage, delay, disruption, or interference, Owner may impose a set-off against payments due Contractor.

C. If Contractor damages, delays, disrupts, or interferes with the work of any other contractor, or any utility owner performing other work at or adjacent to the Site, through Contractor's failure to take reasonable and customary measures to avoid such impacts, or if any claim arising out of Contractor's actions, inactions, or negligence in performance of the Work at or adjacent to the Site is made by any such other contractor or utility owner against Contractor, Owner, or Engineer, then Contractor shall (1) promptly attempt to settle the claim as to all parties through negotiations with such other contractor or utility owner, or otherwise resolve the claim by arbitration or other dispute resolution proceeding or at law, and (2) indemnify and hold harmless Owner and Engineer, and the officers, directors, members, partners, employees, agents, consultants and subcontractors of each and any of them from and against any such claims, and against all costs, losses, and damages (including but not limited to all fees and charges of engineers, architects, attorneys, and other professionals and all court or arbitration or other dispute resolution costs) arising out of or relating to such damage, delay, disruption, or interference.

ARTICLE 9—OWNER'S RESPONSIBILITIES

9.01 *Communications to Contractor*

A. Except as otherwise provided in these General Conditions, Owner shall issue all communications to Contractor through Engineer.

9.02 *Replacement of Engineer*

A. Owner may at its discretion appoint an engineer to replace Engineer, provided Contractor makes no reasonable objection to the replacement engineer. The replacement engineer's status under the Contract Documents will be that of the former Engineer.

9.03 *Furnish Data*

A. Owner shall promptly furnish the data required of Owner under the Contract Documents.

9.04 *Pay When Due*

A. Owner shall make payments to Contractor when they are due as provided in the Agreement.

9.05 *Lands and Easements; Reports, Tests, and Drawings*

A. Owner's duties with respect to providing lands and easements are set forth in Paragraph 5.01.

B. Owner's duties with respect to providing engineering surveys to establish reference points are set forth in Paragraph 4.03.

C. Article 5 refers to Owner's identifying and making available to Contractor copies of reports of explorations and tests of conditions at the Site, and drawings of physical conditions relating to existing surface or subsurface structures at the Site.

9.06 *Insurance*

A. Owner's responsibilities, if any, with respect to purchasing and maintaining liability and property insurance are set forth in Article 6.

Copyright© 2018 National Society of Professional Engineers, American Council of Engineering Companies, and American Society of Civil Engineers. All rights reserved.

9.07 *Change Orders*

A. Owner's responsibilities with respect to Change Orders are set forth in Article 11.

9.08 *Inspections, Tests, and Approvals*

A. Owner's responsibility with respect to certain inspections, tests, and approvals is set forth in Paragraph 14.02.B.

9.09 *Limitations on Owner's Responsibilities*

A. The Owner shall not supervise, direct, or have control or authority over, nor be responsible for, Contractor's means, methods, techniques, sequences, or procedures of construction, or the safety precautions and programs incident thereto, or for any failure of Contractor to comply with Laws and Regulations applicable to the performance of the Work. Owner will not be responsible for Contractor's failure to perform the Work in accordance with the Contract Documents.

9.10 *Undisclosed Hazardous Environmental Condition*

A. Owner's responsibility in respect to an undisclosed Hazardous Environmental Condition is set forth in Paragraph 5.06.

9.11 *Evidence of Financial Arrangements*

A. Upon request of Contractor, Owner shall furnish Contractor reasonable evidence that financial arrangements have been made to satisfy Owner's obligations under the Contract (including obligations under proposed changes in the Work).

9.12 *Safety Programs*

A. While at the Site, Owner's employees and representatives shall comply with the specific applicable requirements of Contractor's safety programs of which Owner has been informed.

B. Owner shall furnish copies of any applicable Owner safety programs to Contractor.

ARTICLE 10—ENGINEER'S STATUS DURING CONSTRUCTION

10.01 *Owner's Representative*

A. Engineer will be Owner's representative during the construction period. The duties and responsibilities and the limitations of authority of Engineer as Owner's representative during construction are set forth in the Contract.

10.02 *Visits to Site*

A. Engineer will make visits to the Site at intervals appropriate to the various stages of construction as Engineer deems necessary in order to observe, as an experienced and qualified design professional, the progress that has been made and the quality of the various aspects of Contractor's executed Work. Based on information obtained during such visits and observations, Engineer, for the benefit of Owner, will determine, in general, if the Work is proceeding in accordance with the Contract Documents. Engineer will not be required to make exhaustive or continuous inspections on the Site to check the quality or quantity of the Work. Engineer's efforts will be directed toward providing for Owner a greater degree of confidence that the completed Work will conform generally to the Contract Documents. On

Copyright© 2018 National Society of Professional Engineers, American Council of Engineering Companies, and American Society of Civil Engineers. All rights reserved.

the basis of such visits and observations, Engineer will keep Owner informed of the progress of the Work and will endeavor to guard Owner against defective Work.

B. Engineer's visits and observations are subject to all the limitations on Engineer's authority and responsibility set forth in Paragraph 10.07. Particularly, but without limitation, during or as a result of Engineer's visits or observations of Contractor's Work, Engineer will not supervise, direct, control, or have authority over or be responsible for Contractor's means, methods, techniques, sequences, or procedures of construction, or the safety precautions and programs incident thereto, or for any failure of Contractor to comply with Laws and Regulations applicable to the performance of the Work.

10.03 *Resident Project Representative*

A. If Owner and Engineer have agreed that Engineer will furnish a Resident Project Representative to represent Engineer at the Site and assist Engineer in observing the progress and quality of the Work, then the authority and responsibilities of any such Resident Project Representative will be as provided in the Supplementary Conditions, and limitations on the responsibilities thereof will be as provided in the Supplementary Conditions and in Paragraph 10.07.

B. If Owner designates an individual or entity who is not Engineer's consultant, agent, or employee to represent Owner at the Site, then the responsibilities and authority of such individual or entity will be as provided in the Supplementary Conditions.

10.04 *Engineer's Authority*

A. Engineer has the authority to reject Work in accordance with Article 14.

B. Engineer's authority as to Submittals is set forth in Paragraph 7.16.

C. Engineer's authority as to design drawings, calculations, specifications, certifications and other Submittals from Contractor in response to Owner's delegation (if any) to Contractor of professional design services, is set forth in Paragraph 7.19.

D. Engineer's authority as to changes in the Work is set forth in Article 11.

E. Engineer's authority as to Applications for Payment is set forth in Article 15.

10.05 *Determinations for Unit Price Work*

A. Engineer will determine the actual quantities and classifications of Unit Price Work performed by Contractor as set forth in Paragraph 13.03.

10.06 *Decisions on Requirements of Contract Documents and Acceptability of Work*

A. Engineer will render decisions regarding the requirements of the Contract Documents, and judge the acceptability of the Work, pursuant to the specific procedures set forth herein for initial interpretations, Change Proposals, and acceptance of the Work. In rendering such decisions and judgments, Engineer will not show partiality to Owner or Contractor, and will not be liable to Owner, Contractor, or others in connection with any proceedings, interpretations, decisions, or judgments conducted or rendered in good faith.

10.07 *Limitations on Engineer's Authority and Responsibilities*

A. Neither Engineer's authority or responsibility under this Article 10 or under any other provision of the Contract, nor any decision made by Engineer in good faith either to exercise or not exercise such authority or responsibility or the undertaking, exercise, or performance

Copyright© 2018 National Society of Professional Engineers, American Council of Engineering Companies, and American Society of Civil Engineers. All rights reserved.

of any authority or responsibility by Engineer, will create, impose, or give rise to any duty in contract, tort, or otherwise owed by Engineer to Contractor, any Subcontractor, any Supplier, any other individual or entity, or to any surety for or employee or agent of any of them.

B. Engineer will not supervise, direct, control, or have authority over or be responsible for Contractor's means, methods, techniques, sequences, or procedures of construction, or the safety precautions and programs incident thereto, or for any failure of Contractor to comply with Laws and Regulations applicable to the performance of the Work. Engineer will not be responsible for Contractor's failure to perform the Work in accordance with the Contract Documents.

C. Engineer will not be responsible for the acts or omissions of Contractor or of any Subcontractor, any Supplier, or of any other individual or entity performing any of the Work.

D. Engineer's review of the final Application for Payment and accompanying documentation, and all maintenance and operating instructions, schedules, guarantees, bonds, certificates of inspection, tests and approvals, and other documentation required to be delivered by Contractor under Paragraph 15.06.A, will only be to determine generally that their content complies with the requirements of, and in the case of certificates of inspections, tests, and approvals, that the results certified indicate compliance with the Contract Documents.

E. The limitations upon authority and responsibility set forth in this Paragraph 10.07 also apply to the Resident Project Representative, if any.

10.08 *Compliance with Safety Program*

A. While at the Site, Engineer's employees and representatives will comply with the specific applicable requirements of Owner's and Contractor's safety programs of which Engineer has been informed.

ARTICLE 11—CHANGES TO THE CONTRACT

11.01 *Amending and Supplementing the Contract*

A. The Contract may be amended or supplemented by a Change Order, a Work Change Directive, or a Field Order.

B. If an amendment or supplement to the Contract includes a change in the Contract Price or the Contract Times, such amendment or supplement must be set forth in a Change Order.

C. All changes to the Contract that involve (1) the performance or acceptability of the Work, (2) the design (as set forth in the Drawings, Specifications, or otherwise), or (3) other engineering or technical matters, must be supported by Engineer's recommendation. Owner and Contractor may amend other terms and conditions of the Contract without the recommendation of the Engineer.

11.02 *Change Orders*

A. Owner and Contractor shall execute appropriate Change Orders covering:

1. Changes in Contract Price or Contract Times which are agreed to by the parties, including any undisputed sum or amount of time for Work actually performed in accordance with a Work Change Directive;

Copyright© 2018 National Society of Professional Engineers, American Council of Engineering Companies, and American Society of Civil Engineers. All rights reserved.

2. Changes in Contract Price resulting from an Owner set-off, unless Contractor has duly contested such set-off;

3. Changes in the Work which are: (a) ordered by Owner pursuant to Paragraph 11.05, (b) required because of Owner's acceptance of defective Work under Paragraph 14.04 or Owner's correction of defective Work under Paragraph 14.07, or (c) agreed to by the parties, subject to the need for Engineer's recommendation if the change in the Work involves the design (as set forth in the Drawings, Specifications, or otherwise) or other engineering or technical matters; and

4. Changes that embody the substance of any final and binding results under: Paragraph 11.03.B, resolving the impact of a Work Change Directive; Paragraph 11.09, concerning Change Proposals; Article 12, Claims; Paragraph 13.02.D, final adjustments resulting from allowances; Paragraph 13.03.D, final adjustments relating to determination of quantities for Unit Price Work; and similar provisions.

B. If Owner or Contractor refuses to execute a Change Order that is required to be executed under the terms of Paragraph 11.02.A, it will be deemed to be of full force and effect, as if fully executed.

11.03 *Work Change Directives*

A. A Work Change Directive will not change the Contract Price or the Contract Times but is evidence that the parties expect that the modification ordered or documented by a Work Change Directive will be incorporated in a subsequently issued Change Order, following negotiations by the parties as to the Work Change Directive's effect, if any, on the Contract Price and Contract Times; or, if negotiations are unsuccessful, by a determination under the terms of the Contract Documents governing adjustments, expressly including Paragraph 11.07 regarding change of Contract Price.

B. If Owner has issued a Work Change Directive and:

1. Contractor believes that an adjustment in Contract Times or Contract Price is necessary, then Contractor shall submit any Change Proposal seeking such an adjustment no later than 30 days after the completion of the Work set out in the Work Change Directive.

2. Owner believes that an adjustment in Contract Times or Contract Price is necessary, then Owner shall submit any Claim seeking such an adjustment no later than 60 days after issuance of the Work Change Directive.

11.04 *Field Orders*

A. Engineer may authorize minor changes in the Work if the changes do not involve an adjustment in the Contract Price or the Contract Times and are compatible with the design concept of the completed Project as a functioning whole as indicated by the Contract Documents. Such changes will be accomplished by a Field Order and will be binding on Owner and also on Contractor, which shall perform the Work involved promptly.

B. If Contractor believes that a Field Order justifies an adjustment in the Contract Price or Contract Times, then before proceeding with the Work at issue, Contractor shall submit a Change Proposal as provided herein.

Copyright© 2018 National Society of Professional Engineers, American Council of Engineering Companies, and American Society of Civil Engineers. All rights reserved.

11.05 *Owner-Authorized Changes in the Work*

A. A. Without invalidating the Contract and without notice to any surety, Owner may, at any time or from time to time, order additions, deletions, or revisions in the Work. Changes involving the design (as set forth in the Drawings, Specifications, or otherwise) or other engineering or technical matters will be supported by Engineer's recommendation.

B. Such changes in the Work may be accomplished by a Change Order, if Owner and Contractor have agreed as to the effect, if any, of the changes on Contract Times or Contract Price; or by a Work Change Directive. Upon receipt of any such document, Contractor shall promptly proceed with the Work involved; or, in the case of a deletion in the Work, promptly cease construction activities with respect to such deleted Work. Added or revised Work must be performed under the applicable conditions of the Contract Documents.

C. Nothing in this Paragraph 11.05 obligates Contractor to undertake work that Contractor reasonably concludes cannot be performed in a manner consistent with Contractor's safety obligations under the Contract Documents or Laws and Regulations.

11.06 *Unauthorized Changes in the Work*

A. Contractor shall not be entitled to an increase in the Contract Price or an extension of the Contract Times with respect to any work performed that is not required by the Contract Documents, as amended, modified, or supplemented, except in the case of an emergency as provided in Paragraph 7.15 or in the case of uncovering Work as provided in Paragraph 14.05.C.2.

11.07 *Change of Contract Price*

A. The Contract Price may only be changed by a Change Order. Any Change Proposal for an adjustment in the Contract Price must comply with the provisions of Paragraph 11.09. Any Claim for an adjustment of Contract Price must comply with the provisions of Article 12.

B. An adjustment in the Contract Price will be determined as follows:

1. Where the Work involved is covered by unit prices contained in the Contract Documents, then by application of such unit prices to the quantities of the items involved (subject to the provisions of Paragraph 13.03);

2. Where the Work involved is not covered by unit prices contained in the Contract Documents, then by a mutually agreed lump sum (which may include an allowance for overhead and profit not necessarily in accordance with Paragraph 11.07.C.2); or

3. Where the Work involved is not covered by unit prices contained in the Contract Documents and the parties do not reach mutual agreement to a lump sum, then on the basis of the Cost of the Work (determined as provided in Paragraph 13.01) plus a Contractor's fee for overhead and profit (determined as provided in Paragraph 11.07.C).

C. *Contractor's Fee*: When applicable, the Contractor's fee for overhead and profit will be determined as follows:

~~1.~~ A mutually acceptable fixed fee; ~~or~~

Copyright© 2018 National Society of Professional Engineers, American Council of Engineering Companies, and American Society of Civil Engineers. All rights reserved.

2. ~~If a fixed fee is not agreed upon, then a fee based on the following percentages of the various portions of the Cost of the Work:~~

   a. ~~For costs incurred under Paragraphs 13.01.B.1 and 13.01.B.2, the Contractor's fee will be 15 percent;~~

   b. ~~For costs incurred under Paragraph 13.01.B.3, the Contractor's fee will be 5 percent;~~

   c. ~~Where one or more tiers of subcontracts are on the basis of Cost of the Work plus a fee and no fixed fee is agreed upon, the intent of Paragraphs 11.07.C.2.a and 11.07.C.2.b is that the Contractor's fee will be based on: (1) a fee of 15 percent of the costs incurred under Paragraphs 13.01.B.1 and 13.01.B.2 by the Subcontractor that actually performs the Work, at whatever tier, and (2) with respect to Contractor itself and to any Subcontractors of a tier higher than that of the Subcontractor that actually performs the Work, a fee of 5 percent of the amount (fee plus underlying costs incurred) attributable to the next lower tier Subcontractor; provided, however, that for any such subcontracted Work the maximum total fee to be paid by Owner will be no greater than 27 percent of the costs incurred by the Subcontractor that actually performs the Work;~~

   d. ~~No fee will be payable on the basis of costs itemized under Paragraphs 13.01.B.4, 13.01.B.5, and 13.01.C;~~

2. The amount of credit to be allowed by Contractor to Owner for any change which results in a net decrease in Cost of the Work will be the amount of the actual net decrease in Cost of the Work and a deduction of an additional amount equal to 5 percent of such actual net decrease in Cost of the Work; and

3. When both additions and credits are involved in any one change or Change Proposal, the adjustment in Contractor's fee will be computed by determining the sum of the costs in each of the cost categories in Paragraph 13.01.B (specifically, payroll costs, Paragraph 13.01.B.1; incorporated materials and equipment costs, Paragraph 13.01.B.2; Subcontract costs, Paragraph 13.01.B.3; special consultants costs, Paragraph 13.01.B.4; and other costs, Paragraph 13.01.B.5) and applying to each such cost category sum the appropriate fee from Paragraphs 11.07.C.2.a through 11.07.C.2.e, inclusive.

11.08 *Change of Contract Times*

A. The Contract Times may only be changed by a Change Order. Any Change Proposal for an adjustment in the Contract Times must comply with the provisions of Paragraph 11.09. Any Claim for an adjustment in the Contract Times must comply with the provisions of Article 12.

B. Delay, disruption, and interference in the Work, and any related changes in Contract Times, are addressed in and governed by Paragraph 4.05.

11.09 *Change Proposals*

A. *Purpose and Content*: Contractor shall submit a Change Proposal to Engineer to request an adjustment in the Contract Times or Contract Price; contest an initial decision by Engineer concerning the requirements of the Contract Documents or relating to the acceptability of the Work under the Contract Documents; challenge a set-off against payment due; or seek other relief under the Contract. The Change Proposal will specify any proposed change in Contract Times or Contract Price, or other proposed relief, and explain the reason for the

Copyright© 2018 National Society of Professional Engineers, American Council of Engineering Companies, and American Society of Civil Engineers. All rights reserved.

proposed change, with citations to any governing or applicable provisions of the Contract Documents. Each Change Proposal will address only one issue, or a set of closely related issues.

B. *Change Proposal Procedures*

1. *Submittal*: Contractor shall submit each Change Proposal to Engineer within 30 days after the start of the event giving rise thereto, or after such initial decision.

2. *Supporting Data*: The Contractor shall submit supporting data, including the proposed change in Contract Price or Contract Time (if any), to the Engineer and Owner within 15 days after the submittal of the Change Proposal.

    a. Change Proposals based on or related to delay, interruption, or interference must comply with the provisions of Paragraphs 4.05.D and 4.05.E.

    b. Change proposals related to a change of Contract Price must include full and detailed accounts of materials incorporated into the Work and labor and equipment used for the subject Work.

    The supporting data must be accompanied by a written statement that the supporting data are accurate and complete, and that any requested time or price adjustment is the entire adjustment to which Contractor believes it is entitled as a result of said event.

3. *Engineer's Initial Review*: Engineer will advise Owner regarding the Change Proposal, and consider any comments or response from Owner regarding the Change Proposal. If in its discretion Engineer concludes that additional supporting data is needed before conducting a full review and making a decision regarding the Change Proposal, then Engineer may request that Contractor submit such additional supporting data by a date specified by Engineer, prior to Engineer beginning its full review of the Change Proposal.

4. *Engineer's Full Review and Action on the Change Proposal*: Upon receipt of Contractor's supporting data (including any additional data requested by Engineer), Engineer will conduct a full review of each Change Proposal and, within 30 days after such receipt of the Contractor's supporting data, either approve the Change Proposal in whole, deny it in whole, or approve it in part and deny it in part. Such actions must be in writing, with a copy provided to Owner and Contractor. If Engineer does not take action on the Change Proposal within 30 days, then either Owner or Contractor may at any time thereafter submit a letter to the other party indicating that as a result of Engineer's inaction the Change Proposal is deemed denied, thereby commencing the time for appeal of the denial under Article 12.

5. *Binding Decision*: Engineer's decision is final and binding upon Owner and Contractor, unless Owner or Contractor appeals the decision by filing a Claim under Article 12.

C. *Resolution of Certain Change Proposals*: If the Change Proposal does not involve the design (as set forth in the Drawings, Specifications, or otherwise), the acceptability of the Work, or other engineering or technical matters, then Engineer will notify the parties in writing that the Engineer is unable to resolve the Change Proposal. For purposes of further resolution of such a Change Proposal, such notice will be deemed a denial, and Contractor may choose to seek resolution under the terms of Article 12.

D. *Post-Completion*: Contractor shall not submit any Change Proposals after Engineer issues a written recommendation of final payment pursuant to Paragraph 15.06.B.

Copyright© 2018 National Society of Professional Engineers, American Council of Engineering Companies, and American Society of Civil Engineers. All rights reserved.

11.10 *Notification to Surety*

A. If the provisions of any bond require notice to be given to a surety of any change affecting the general scope of the Work or the provisions of the Contract Documents (including, but not limited to, Contract Price or Contract Times), the giving of any such notice will be Contractor's responsibility. The amount of each applicable bond will be adjusted to reflect the effect of any such change.

ARTICLE 12—CLAIMS

12.01 *Claims*

A. *Claims Process*: The following disputes between Owner and Contractor are subject to the Claims process set forth in this article:

1. Appeals by Owner or Contractor of Engineer's decisions regarding Change Proposals;

2. Owner demands for adjustments in the Contract Price or Contract Times, or other relief under the Contract Documents;

3. Disputes that Engineer has been unable to address because they do not involve the design (as set forth in the Drawings, Specifications, or otherwise), the acceptability of the Work, or other engineering or technical matters; and

4. Subject to the waiver provisions of Paragraph 15.07, any dispute arising after Engineer has issued a written recommendation of final payment pursuant to Paragraph 15.06.B.

B. *Submittal of Claim*: The party submitting a Claim shall deliver it directly to the other party to the Contract promptly (but in no event later than 30 days) after the start of the event giving rise thereto; in the case of appeals regarding Change Proposals within 30 days of the decision under appeal. The party submitting the Claim shall also furnish a copy to the Engineer, for its information only. The responsibility to substantiate a Claim rests with the party making the Claim. In the case of a Claim by Contractor seeking an increase in the Contract Times or Contract Price, Contractor shall certify that the Claim is made in good faith, that the supporting data are accurate and complete, and that to the best of Contractor's knowledge and belief the amount of time or money requested accurately reflects the full amount to which Contractor is entitled.

C. *Review and Resolution*: The party receiving a Claim shall review it thoroughly, giving full consideration to its merits. The two parties shall seek to resolve the Claim through the exchange of information and direct negotiations. The parties may extend the time for resolving the Claim by mutual agreement. All actions taken on a Claim will be stated in writing and submitted to the other party, with a copy to Engineer.

D. *Mediation*

1. At any time after initiation of a Claim, Owner and Contractor may mutually agree to mediation of the underlying dispute. The agreement to mediate will stay the Claim submittal and response process.

2. If Owner and Contractor agree to mediation, then after 60 days from such agreement, either Owner or Contractor may unilaterally terminate the mediation process, and the Claim submittal and decision process will resume as of the date of the termination. If the mediation proceeds but is unsuccessful in resolving the dispute, the Claim

Copyright© 2018 National Society of Professional Engineers, American Council of Engineering Companies, and American Society of Civil Engineers. All rights reserved.

submittal and decision process will resume as of the date of the conclusion of the mediation, as determined by the mediator.

3. Owner and Contractor shall each pay one-half of the mediator's fees and costs.

E. *Partial Approval*: If the party receiving a Claim approves the Claim in part and denies it in part, such action will be final and binding unless within 30 days of such action the other party invokes the procedure set forth in Article 17 for final resolution of disputes.

F. *Denial of Claim*: If efforts to resolve a Claim are not successful, the party receiving the Claim may deny it by giving written notice of denial to the other party. If the receiving party does not take action on the Claim within 90 days, then either Owner or Contractor may at any time thereafter submit a letter to the other party indicating that as a result of the inaction, the Claim is deemed denied, thereby commencing the time for appeal of the denial. A denial of the Claim will be final and binding unless within 30 days of the denial the other party invokes the procedure set forth in Article 17 for the final resolution of disputes.

G. *Final and Binding Results*: If the parties reach a mutual agreement regarding a Claim, whether through approval of the Claim, direct negotiations, mediation, or otherwise; or if a Claim is approved in part and denied in part, or denied in full, and such actions become final and binding; then the results of the agreement or action on the Claim will be incorporated in a Change Order or other written document to the extent they affect the Contract, including the Work, the Contract Times, or the Contract Price.

ARTICLE 13—COST OF THE WORK; ALLOWANCES; UNIT PRICE WORK

13.01 *Cost of the Work*

A. *Purposes for Determination of Cost of the Work*: The term Cost of the Work means the sum of all costs necessary for the proper performance of the Work at issue, as further defined below. The provisions of this Paragraph 13.01 are used for two distinct purposes:

1. To determine Cost of the Work when Cost of the Work is a component of the Contract Price, under cost-plus-fee, time-and-materials, or other cost-based terms; or

2. When needed to determine the value of a Change Order, Change Proposal, Claim, set-off, or other adjustment in Contract Price. When the value of any such adjustment is determined on the basis of Cost of the Work, Contractor is entitled only to those additional or incremental costs required because of the change in the Work or because of the event giving rise to the adjustment.

B. *Costs Included*: Except as otherwise may be agreed to in writing by Owner, costs included in the Cost of the Work will be in amounts no higher than those commonly incurred in the locality of the Project, will not include any of the costs itemized in Paragraph 13.01.C, and will include only the following items:

1. Payroll costs for employees in the direct employ of Contractor in the performance of the Work under schedules of job classifications agreed upon by Owner and Contractor in advance of the subject Work. Such employees include, without limitation, superintendents, foremen, safety managers, safety representatives, and other personnel employed full time on the Work. Payroll costs for employees not employed full time on the Work will be apportioned on the basis of their time spent on the Work. Payroll costs include, but are not limited to, salaries and wages plus the cost of fringe

Copyright© 2018 National Society of Professional Engineers, American Council of Engineering Companies, and American Society of Civil Engineers. All rights reserved.

benefits, which include social security contributions, unemployment, excise, and payroll taxes, workers' compensation, health and retirement benefits, sick leave, and vacation and holiday pay applicable thereto. The expenses of performing Work outside of regular working hours, on Saturday, Sunday, or legal holidays, will be included in the above to the extent authorized by Owner.

2. Cost of all materials and equipment furnished and incorporated in the Work, including costs of transportation and storage thereof, and Suppliers' field services required in connection therewith. All cash discounts accrue to Contractor unless Owner deposits funds with Contractor with which to make payments, in which case the cash discounts will accrue to Owner. All trade discounts, rebates, and refunds and returns from sale of surplus materials and equipment will accrue to Owner, and Contractor shall make provisions so that they may be obtained.

3. Payments made by Contractor to Subcontractors for Work performed by Subcontractors. If required by Owner, Contractor shall obtain competitive bids from subcontractors acceptable to Owner and Contractor and shall deliver such bids to Owner, which will then determine, with the advice of Engineer, which bids, if any, will be acceptable. If any subcontract provides that the Subcontractor is to be paid on the basis of Cost of the Work plus a fee, the Subcontractor's Cost of the Work and fee will be determined in the same manner as Contractor's Cost of the Work and fee as provided in this Paragraph 13.01.

4. Costs of special consultants (including but not limited to engineers, architects, testing laboratories, surveyors, attorneys, and accountants) employed or retained for services specifically related to the Work.

5. Other costs consisting of the following:

    a. The proportion of necessary transportation, travel, and subsistence expenses of Contractor's employees incurred in discharge of duties connected with the Work.

    b. Cost, including transportation and maintenance, of all materials, supplies, equipment, machinery, appliances, office, and temporary facilities at the Site, which are consumed in the performance of the Work, and cost, less market value, of such items used but not consumed which remain the property of Contractor.

        1) In establishing included costs for materials such as scaffolding, plating, or sheeting, consideration will be given to the actual or the estimated life of the material for use on other projects; or rental rates may be established on the basis of purchase or salvage value of such items, whichever is less. Contractor will not be eligible for compensation for such items in an amount that exceeds the purchase cost of such item.

    c. *Construction Equipment Rental*

        1) Rentals of all construction equipment and machinery, and the parts thereof, in accordance with rental agreements approved by Owner as to price (including any surcharge or special rates applicable to overtime use of the construction equipment or machinery), and the costs of transportation, loading, unloading, assembly, dismantling, and removal thereof. All such costs will be in accordance with the terms of said rental agreements. The

Copyright© 2018 National Society of Professional Engineers, American Council of Engineering Companies, and American Society of Civil Engineers. All rights reserved.

rental of any such equipment, machinery, or parts must cease when the use thereof is no longer necessary for the Work.

2) Costs for equipment and machinery owned by Contractor or a Contractor-related entity will be paid at a rate shown for such equipment in the equipment rental rate book specified in the Supplementary Conditions. An hourly rate will be computed by dividing the monthly rates by 176. These computed rates will include all operating costs.

3) With respect to Work that is the result of a Change Order, Change Proposal, Claim, set-off, or other adjustment in Contract Price ("changed Work"), included costs will be based on the time the equipment or machinery is in use on the changed Work and the costs of transportation, loading, unloading, assembly, dismantling, and removal when directly attributable to the changed Work. The cost of any such equipment or machinery, or parts thereof, must cease to accrue when the use thereof is no longer necessary for the changed Work.

d. Sales, consumer, use, and other similar taxes related to the Work, and for which Contractor is liable, as imposed by Laws and Regulations.

e. Deposits lost for causes other than negligence of Contractor, any Subcontractor, or anyone directly or indirectly employed by any of them or for whose acts any of them may be liable, and royalty payments and fees for permits and licenses.

f. Losses and damages (and related expenses) caused by damage to the Work, not compensated by insurance or otherwise, sustained by Contractor in connection with the performance of the Work (except losses and damages within the deductible amounts of builder's risk or other property insurance established in accordance with Paragraph 6.04), provided such losses and damages have resulted from causes other than the negligence of Contractor, any Subcontractor, or anyone directly or indirectly employed by any of them or for whose acts any of them may be liable. Such losses include settlements made with the written consent and approval of Owner. No such losses, damages, and expenses will be included in the Cost of the Work for the purpose of determining Contractor's fee.

g. The cost of utilities, fuel, and sanitary facilities at the Site.

h. Minor expenses such as communication service at the Site, express and courier services, and similar petty cash items in connection with the Work.

i. The costs of premiums for all bonds and insurance that Contractor is required by the Contract Documents to purchase and maintain.

C. *Costs Excluded*: The term Cost of the Work does not include any of the following items:

1. Payroll costs and other compensation of Contractor's officers, executives, principals, general managers, engineers, architects, estimators, attorneys, auditors, accountants, purchasing and contracting agents, expediters, timekeepers, clerks, and other personnel employed by Contractor, whether at the Site or in Contractor's principal or branch office for general administration of the Work and not specifically included in the agreed upon schedule of job classifications referred to in Paragraph 13.01.B.1 or specifically covered by Paragraph 13.01.B.4. The payroll costs and other compensation

Copyright© 2018 National Society of Professional Engineers, American Council of Engineering Companies, and American Society of Civil Engineers. All rights reserved.

excluded here are to be considered administrative costs covered by the Contractor's fee.

2. The cost of purchasing, renting, or furnishing small tools and hand tools.

3. Expenses of Contractor's principal and branch offices other than Contractor's office at the Site.

4. Any part of Contractor's capital expenses, including interest on Contractor's capital employed for the Work and charges against Contractor for delinquent payments.

5. Costs due to the negligence of Contractor, any Subcontractor, or anyone directly or indirectly employed by any of them or for whose acts any of them may be liable, including but not limited to, the correction of defective Work, disposal of materials or equipment wrongly supplied, and making good any damage to property.

6. Expenses incurred in preparing and advancing Claims.

7. Other overhead or general expense costs of any kind and the costs of any item not specifically and expressly included in Paragraph 13.01.B.

D. *Contractor's Fee*

1. When the Work as a whole is performed on the basis of cost-plus-a-fee, then:

a. Contractor's fee for the Work set forth in the Contract Documents as of the Effective Date of the Contract will be determined as set forth in the Agreement.

b. for any Work covered by a Change Order, Change Proposal, Claim, set-off, or other adjustment in Contract Price, the fee for any additions or deletions will be determined in accordance with Paragraph 11.07.C.1.~~as follows:~~

4) ~~When the fee for the Work as a whole is a percentage of the Cost of the Work, the fee will automatically adjust as the Cost of the Work changes.~~

5) ~~When the fee for the Work as a whole is a fixed fee, the fee for any additions or deletions will be determined in accordance with Paragraph 11.07.C.2.~~

2. When the Work as a whole is performed on the basis of a stipulated sum, or any other basis other than cost-plus-a-fee, then Contractor's fee for any Work covered by a Change Order, Change Proposal, Claim, set-off, or other adjustment in Contract Price on the basis of Cost of the Work will be determined in accordance with Paragraph 11.07.C.2.

E. *Documentation and Audit*: Whenever the Cost of the Work for any purpose is to be determined pursuant to this Article 13, Contractor and pertinent Subcontractors will establish and maintain records of the costs in accordance with generally accepted accounting practices. Subject to prior written notice, Owner will be afforded reasonable access, during normal business hours, to all Contractor's accounts, records, books, correspondence, instructions, drawings, receipts, vouchers, memoranda, and similar data relating to the Cost of the Work and Contractor's fee. Contractor shall preserve all such documents for a period of three years after the final payment by Owner. Pertinent Subcontractors will afford such access to Owner, and preserve such documents, to the same extent required of Contractor.

Copyright© 2018 National Society of Professional Engineers, American Council of Engineering Companies, and American Society of Civil Engineers. All rights reserved.

13.02 *Allowances*

A. It is understood that Contractor has included in the Contract Price all allowances so named in the Contract Documents and shall cause the Work so covered to be performed for such sums and by such persons or entities as may be acceptable to Owner and Engineer.

B. *Cash Allowances*: Contractor agrees that:

1. the cash allowances include the cost to Contractor (less any applicable trade discounts) of materials and equipment required by the allowances to be delivered at the Site, and all applicable taxes; and

2. Contractor's costs for unloading and handling on the Site, labor, installation, overhead, profit, and other expenses contemplated for the cash allowances have been included in the Contract Price and not in the allowances, and no demand for additional payment for any of the foregoing will be valid.

C. *Owner's Contingency Allowance*: Contractor agrees that an Owner's contingency allowance, if any, is for the sole use of Owner to cover unanticipated costs.

D. Prior to final payment, an appropriate Change Order will be issued as recommended by Engineer to reflect actual amounts due Contractor for Work covered by allowances, and the Contract Price will be correspondingly adjusted.

13.03 *Unit Price Work*

A. Where the Contract Documents provide that all or part of the Work is to be Unit Price Work, initially the Contract Price will be deemed to include for all Unit Price Work an amount equal to the sum of the unit price for each separately identified item of Unit Price Work times the estimated quantity of each item as indicated in the Agreement.

B. The estimated quantities of items of Unit Price Work are not guaranteed and are solely for the purpose of comparison of Bids and determining an initial Contract Price. Payments to Contractor for Unit Price Work will be based on actual quantities.

C. Each unit price will be deemed to include an amount considered by Contractor to be adequate to cover Contractor's overhead and profit for each separately identified item.

D. Engineer will determine the actual quantities and classifications of Unit Price Work performed by Contractor. Engineer will review with Contractor the Engineer's preliminary determinations on such matters before rendering a written decision thereon (by recommendation of an Application for Payment or otherwise). Engineer's written decision thereon will be final and binding (except as modified by Engineer to reflect changed factual conditions or more accurate data) upon Owner and Contractor, and the final adjustment of Contract Price will be set forth in a Change Order, subject to the provisions of the following paragraph.

E. *Adjustments in Unit Price*

1. Contractor or Owner shall be entitled to an adjustment in the unit price with respect to an item of Unit Price Work if:

a. the quantity of the item of Unit Price Work performed by Contractor differs materially and significantly from the estimated quantity of such item indicated in the Agreement; and

Copyright© 2018 National Society of Professional Engineers, American Council of Engineering Companies, and American Society of Civil Engineers. All rights reserved.

b. Contractor's unit costs to perform the item of Unit Price Work have changed materially and significantly as a result of the quantity change.

2. The adjustment in unit price will account for and be coordinated with any related changes in quantities of other items of Work, and in Contractor's costs to perform such other Work, such that the resulting overall change in Contract Price is equitable to Owner and Contractor.

3. Adjusted unit prices will apply to all units of that item.

ARTICLE 14—TESTS AND INSPECTIONS; CORRECTION, REMOVAL, OR ACCEPTANCE OF DEFECTIVE WORK

14.01 *Access to Work*

A. Owner, Engineer, their consultants and other representatives and personnel of Owner, independent testing laboratories, and authorities having jurisdiction have access to the Site and the Work at reasonable times for their observation, inspection, and testing. Contractor shall provide them proper and safe conditions for such access and advise them of Contractor's safety procedures and programs so that they may comply with such procedures and programs as applicable.

14.02 *Tests, Inspections, and Approvals*

A. Contractor shall give Engineer timely notice of readiness of the Work (or specific parts thereof) for all required inspections and tests, and shall cooperate with inspection and testing personnel to facilitate required inspections and tests.

B. Owner shall retain and pay for the services of an independent inspector, testing laboratory, or other qualified individual or entity to perform all inspections and tests expressly required by the Contract Documents to be furnished and paid for by Owner, except that costs incurred in connection with tests or inspections of covered Work will be governed by the provisions of Paragraph 14.05.

C. If Laws or Regulations of any public body having jurisdiction require any Work (or part thereof) specifically to be inspected, tested, or approved by an employee or other representative of such public body, Contractor shall assume full responsibility for arranging and obtaining such inspections, tests, or approvals, pay all costs in connection therewith, and furnish Engineer the required certificates of inspection or approval.

D. Contractor shall be responsible for arranging, obtaining, and paying for all inspections and tests required:

1. by the Contract Documents, unless the Contract Documents expressly allocate responsibility for a specific inspection or test to Owner;

2. to attain Owner's and Engineer's acceptance of materials or equipment to be incorporated in the Work;

3. by manufacturers of equipment furnished under the Contract Documents;

4. for testing, adjusting, and balancing of mechanical, electrical, and other equipment to be incorporated into the Work; and

Copyright© 2018 National Society of Professional Engineers, American Council of Engineering Companies, and American Society of Civil Engineers. All rights reserved.

5. for acceptance of materials, mix designs, or equipment submitted for approval prior to Contractor's purchase thereof for incorporation in the Work.

Such inspections and tests will be performed by independent inspectors, testing laboratories, or other qualified individuals or entities acceptable to Owner and Engineer.

E. If the Contract Documents require the Work (or part thereof) to be approved by Owner, Engineer, or another designated individual or entity, then Contractor shall assume full responsibility for arranging and obtaining such approvals.

F. If any Work (or the work of others) that is to be inspected, tested, or approved is covered by Contractor without written concurrence of Engineer, Contractor shall, if requested by Engineer, uncover such Work for observation. Such uncovering will be at Contractor's expense unless Contractor had given Engineer timely notice of Contractor's intention to cover the same and Engineer had not acted with reasonable promptness in response to such notice.

14.03 *Defective Work*

A. *Contractor's Obligation*: It is Contractor's obligation to assure that the Work is not defective.

B. *Engineer's Authority*: Engineer has the authority to determine whether Work is defective, and to reject defective Work.

C. *Notice of Defects*: Prompt written notice of all defective Work of which Owner or Engineer has actual knowledge will be given to Contractor.

D. *Correction, or Removal and Replacement*: Promptly after receipt of written notice of defective Work, Contractor shall correct all such defective Work, whether or not fabricated, installed, or completed, or, if Engineer has rejected the defective Work, remove it from the Project and replace it with Work that is not defective.

E. *Preservation of Warranties*: When correcting defective Work, Contractor shall take no action that would void or otherwise impair Owner's special warranty and guarantee, if any, on said Work.

F. *Costs and Damages*: In addition to its correction, removal, and replacement obligations with respect to defective Work, Contractor shall pay all claims, costs, losses, and damages arising out of or relating to defective Work, including but not limited to the cost of the inspection, testing, correction, removal, replacement, or reconstruction of such defective Work, fines levied against Owner by governmental authorities because the Work is defective, and the costs of repair or replacement of work of others resulting from defective Work. Prior to final payment, if Owner and Contractor are unable to agree as to the measure of such claims, costs, losses, and damages resulting from defective Work, then Owner may impose a reasonable set-off against payments due under Article 15.

14.04 *Acceptance of Defective Work*

A. If, instead of requiring correction or removal and replacement of defective Work, Owner prefers to accept it, Owner may do so (subject, if such acceptance occurs prior to final payment, to Engineer's confirmation that such acceptance is in general accord with the design intent and applicable engineering principles, and will not endanger public safety). Contractor shall pay all claims, costs, losses, and damages attributable to Owner's evaluation of and determination to accept such defective Work (such costs to be approved by Engineer as to reasonableness), and for the diminished value of the Work to the extent

Copyright© 2018 National Society of Professional Engineers, American Council of Engineering Companies, and American Society of Civil Engineers. All rights reserved.

not otherwise paid by Contractor. If any such acceptance occurs prior to final payment, the necessary revisions in the Contract Documents with respect to the Work will be incorporated in a Change Order. If the parties are unable to agree as to the decrease in the Contract Price, reflecting the diminished value of Work so accepted, then Owner may impose a reasonable set-off against payments due under Article 15. If the acceptance of defective Work occurs after final payment, Contractor shall pay an appropriate amount to Owner.

14.05 *Uncovering Work*

A. Engineer has the authority to require additional inspection or testing of the Work, whether or not the Work is fabricated, installed, or completed.

B. If any Work is covered contrary to the written request of Engineer, then Contractor shall, if requested by Engineer, uncover such Work for Engineer's observation, and then replace the covering, all at Contractor's expense.

C. If Engineer considers it necessary or advisable that covered Work be observed by Engineer or inspected or tested by others, then Contractor, at Engineer's request, shall uncover, expose, or otherwise make available for observation, inspection, or testing as Engineer may require, that portion of the Work in question, and provide all necessary labor, material, and equipment.

1. If it is found that the uncovered Work is defective, Contractor shall be responsible for all claims, costs, losses, and damages arising out of or relating to such uncovering, exposure, observation, inspection, and testing, and of satisfactory replacement or reconstruction (including but not limited to all costs of repair or replacement of work of others); and pending Contractor's full discharge of this responsibility the Owner shall be entitled to impose a reasonable set-off against payments due under Article 15.

2. If the uncovered Work is not found to be defective, Contractor shall be allowed an increase in the Contract Price or an extension of the Contract Times, directly attributable to such uncovering, exposure, observation, inspection, testing, replacement, and reconstruction. If the parties are unable to agree as to the amount or extent thereof, then Contractor may submit a Change Proposal within 30 days of the determination that the Work is not defective.

14.06 *Owner May Stop the Work*

A. If the Work is defective, or Contractor fails to supply sufficient skilled workers or suitable materials or equipment, or fails to perform the Work in such a way that the completed Work will conform to the Contract Documents, then Owner may order Contractor to stop the Work, or any portion thereof, until the cause for such order has been eliminated; however, this right of Owner to stop the Work will not give rise to any duty on the part of Owner to exercise this right for the benefit of Contractor, any Subcontractor, any Supplier, any other individual or entity, or any surety for, or employee or agent of any of them.

14.07 *Owner May Correct Defective Work*

A. If Contractor fails within a reasonable time after written notice from Engineer to correct defective Work, or to remove and replace defective Work as required by Engineer, then Owner may, after 7 days' written notice to Contractor, correct or remedy any such deficiency.

Copyright© 2018 National Society of Professional Engineers, American Council of Engineering Companies, and American Society of Civil Engineers. All rights reserved.

B. In exercising the rights and remedies under this Paragraph 14.07, Owner shall proceed expeditiously. In connection with such corrective or remedial action, Owner may exclude Contractor from all or part of the Site, take possession of all or part of the Work and suspend Contractor's services related thereto, and incorporate in the Work all materials and equipment stored at the Site or for which Owner has paid Contractor but which are stored elsewhere. Contractor shall allow Owner, Owner's representatives, agents and employees, Owner's other contractors, and Engineer and Engineer's consultants access to the Site to enable Owner to exercise the rights and remedies under this paragraph.

C. All claims, costs, losses, and damages incurred or sustained by Owner in exercising the rights and remedies under this Paragraph 14.07 will be charged against Contractor as set-offs against payments due under Article 15. Such claims, costs, losses and damages will include but not be limited to all costs of repair, or replacement of work of others destroyed or damaged by correction, removal, or replacement of Contractor's defective Work.

D. Contractor shall not be allowed an extension of the Contract Times because of any delay in the performance of the Work attributable to the exercise by Owner of Owner's rights and remedies under this Paragraph 14.07.

ARTICLE 15—PAYMENTS TO CONTRACTOR; SET-OFFS; COMPLETION; CORRECTION PERIOD

15.01 *Progress Payments*

A. *Basis for Progress Payments*: The Schedule of Values established as provided in Article 2 will serve as the basis for progress payments and will be incorporated into a form of Application for Payment acceptable to Engineer. Progress payments for Unit Price Work will be based on the number of units completed during the pay period, as determined under the provisions of Paragraph 13.03. Progress payments for cost-based Work will be based on Cost of the Work completed by Contractor during the pay period.

B. *Applications for Payments*

1. At least 20 days before the date established in the Agreement for each progress payment (but not more often than once a month), Contractor shall submit to Engineer for review an Application for Payment filled out and signed by Contractor covering the Work completed as of the date of the Application and accompanied by such supporting documentation as is required by the Contract Documents.

2. If payment is requested on the basis of materials and equipment not incorporated in the Work but delivered and suitably stored at the Site or at another location agreed to in writing, the Application for Payment must also be accompanied by: (a) a bill of sale, invoice, copies of subcontract or purchase order payments, or other documentation establishing full payment by Contractor for the materials and equipment; (b) at Owner's request, documentation warranting that Owner has received the materials and equipment free and clear of all Liens; and (c) evidence that the materials and equipment are covered by appropriate property insurance, a warehouse bond, or other arrangements to protect Owner's interest therein, all of which must be satisfactory to Owner.

3. Beginning with the second Application for Payment, each Application must include an affidavit of Contractor stating that all previous progress payments received by

Copyright© 2018 National Society of Professional Engineers, American Council of Engineering Companies, and American Society of Civil Engineers. All rights reserved.

Contractor have been applied to discharge Contractor's legitimate obligations associated with prior Applications for Payment.

4. The amount of retainage with respect to progress payments will be as stipulated in the Agreement.

C. *Review of Applications*

1. Engineer will, within 10 days after receipt of each Application for Payment, including each resubmittal, either indicate in writing a recommendation of payment and present the Application to Owner, or return the Application to Contractor indicating in writing Engineer's reasons for refusing to recommend payment. In the latter case, Contractor may make the necessary corrections and resubmit the Application.

2. Engineer's recommendation of any payment requested in an Application for Payment will constitute a representation by Engineer to Owner, based on Engineer's observations of the executed Work as an experienced and qualified design professional, and on Engineer's review of the Application for Payment and the accompanying data and schedules, that to the best of Engineer's knowledge, information and belief:

   a. the Work has progressed to the point indicated;

   b. the quality of the Work is generally in accordance with the Contract Documents (subject to an evaluation of the Work as a functioning whole prior to or upon Substantial Completion, the results of any subsequent tests called for in the Contract Documents, a final determination of quantities and classifications for Unit Price Work under Paragraph 13.03, and any other qualifications stated in the recommendation); and

   c. the conditions precedent to Contractor's being entitled to such payment appear to have been fulfilled in so far as it is Engineer's responsibility to observe the Work.

3. By recommending any such payment Engineer will not thereby be deemed to have represented that:

   a. inspections made to check the quality or the quantity of the Work as it has been performed have been exhaustive, extended to every aspect of the Work in progress, or involved detailed inspections of the Work beyond the responsibilities specifically assigned to Engineer in the Contract; or

   b. there may not be other matters or issues between the parties that might entitle Contractor to be paid additionally by Owner or entitle Owner to withhold payment to Contractor.

4. Neither Engineer's review of Contractor's Work for the purposes of recommending payments nor Engineer's recommendation of any payment, including final payment, will impose responsibility on Engineer:

   a. to supervise, direct, or control the Work;

   b. for the means, methods, techniques, sequences, or procedures of construction, or the safety precautions and programs incident thereto;

   c. for Contractor's failure to comply with Laws and Regulations applicable to Contractor's performance of the Work;

Copyright© 2018 National Society of Professional Engineers, American Council of Engineering Companies, and American Society of Civil Engineers. All rights reserved.

d. to make any examination to ascertain how or for what purposes Contractor has used the money paid by Owner; or

e. to determine that title to any of the Work, materials, or equipment has passed to Owner free and clear of any Liens.

5. Engineer may refuse to recommend the whole or any part of any payment if, in Engineer's opinion, it would be incorrect to make the representations to Owner stated in Paragraph 15.01.C.2.

6. Engineer will recommend reductions in payment (set-offs) necessary in Engineer's opinion to protect Owner from loss because:

a. the Work is defective, requiring correction or replacement;

b. the Contract Price has been reduced by Change Orders;

c. Owner has been required to correct defective Work in accordance with Paragraph 14.07, or has accepted defective Work pursuant to Paragraph 14.04;

d. Owner has been required to remove or remediate a Hazardous Environmental Condition for which Contractor is responsible; or

e. Engineer has actual knowledge of the occurrence of any of the events that would constitute a default by Contractor and therefore justify termination for cause under the Contract Documents.

D. *Payment Becomes Due*

1. Ten days after presentation of the Application for Payment to Owner with Engineer's recommendation, the amount recommended (subject to any Owner set-offs) will become due, and when due will be paid by Owner to Contractor.

E. *Reductions in Payment by Owner*

1. In addition to any reductions in payment (set-offs) recommended by Engineer, Owner is entitled to impose a set-off against payment based on any of the following:

a. Claims have been made against Owner based on Contractor's conduct in the performance or furnishing of the Work, or Owner has incurred costs, losses, or damages resulting from Contractor's conduct in the performance or furnishing of the Work, including but not limited to claims, costs, losses, or damages from workplace injuries, adjacent property damage, non-compliance with Laws and Regulations, and patent infringement;

b. Contractor has failed to take reasonable and customary measures to avoid damage, delay, disruption, and interference with other work at or adjacent to the Site;

c. Contractor has failed to provide and maintain required bonds or insurance;

d. Owner has been required to remove or remediate a Hazardous Environmental Condition for which Contractor is responsible;

e. Owner has incurred extra charges or engineering costs related to submittal reviews, evaluations of proposed substitutes, tests and inspections, or return visits to manufacturing or assembly facilities;

Copyright© 2018 National Society of Professional Engineers, American Council of Engineering Companies, and American Society of Civil Engineers. All rights reserved.

f. The Work is defective, requiring correction or replacement;

g. Owner has been required to correct defective Work in accordance with Paragraph 14.07, or has accepted defective Work pursuant to Paragraph 14.04;

h. The Contract Price has been reduced by Change Orders;

i. An event has occurred that would constitute a default by Contractor and therefore justify a termination for cause;

j. Liquidated or other damages have accrued as a result of Contractor's failure to achieve Milestones, Substantial Completion, or final completion of the Work;

k. Liens have been filed in connection with the Work, except where Contractor has delivered a specific bond satisfactory to Owner to secure the satisfaction and discharge of such Liens; or

l. Other items entitle Owner to a set-off against the amount recommended.

2. If Owner imposes any set-off against payment, whether based on its own knowledge or on the written recommendations of Engineer, Owner will give Contractor immediate written notice (with a copy to Engineer) stating the reasons for such action and the specific amount of the reduction, and promptly pay Contractor any amount remaining after deduction of the amount so withheld. Owner shall promptly pay Contractor the amount so withheld, or any adjustment thereto agreed to by Owner and Contractor, if Contractor remedies the reasons for such action. The reduction imposed will be binding on Contractor unless it duly submits a Change Proposal contesting the reduction.

3. Upon a subsequent determination that Owner's refusal of payment was not justified, the amount wrongfully withheld will be treated as an amount due as determined by Paragraph 15.01.D.1 and subject to interest as provided in the Agreement.

15.02 *Contractor's Warranty of Title*

A. Contractor warrants and guarantees that title to all Work, materials, and equipment furnished under the Contract will pass to Owner free and clear of (1) all Liens and other title defects, and (2) all patent, licensing, copyright, or royalty obligations, no later than 7 days after the time of payment by Owner.

15.03 *Substantial Completion*

A. When Contractor considers the entire Work ready for its intended use Contractor shall notify Owner and Engineer in writing that the entire Work is substantially complete and request that Engineer issue a certificate of Substantial Completion. Contractor shall at the same time submit to Owner and Engineer an initial draft of punch list items to be completed or corrected before final payment.

B. Promptly after Contractor's notification, Owner, Contractor, and Engineer shall make an inspection of the Work to determine the status of completion. If Engineer does not consider the Work substantially complete, Engineer will notify Contractor in writing giving the reasons therefor.

C. If Engineer considers the Work substantially complete, Engineer will deliver to Owner a preliminary certificate of Substantial Completion which will fix the date of Substantial Completion. Engineer shall attach to the certificate a punch list of items to be completed or

Copyright© 2018 National Society of Professional Engineers, American Council of Engineering Companies, and American Society of Civil Engineers. All rights reserved.

corrected before final payment. Owner shall have 7 days after receipt of the preliminary certificate during which to make written objection to Engineer as to any provisions of the certificate or attached punch list. If, after considering the objections to the provisions of the preliminary certificate, Engineer concludes that the Work is not substantially complete, Engineer will, within 14 days after submission of the preliminary certificate to Owner, notify Contractor in writing that the Work is not substantially complete, stating the reasons therefor. If Owner does not object to the provisions of the certificate, or if despite consideration of Owner's objections Engineer concludes that the Work is substantially complete, then Engineer will, within said 14 days, execute and deliver to Owner and Contractor a final certificate of Substantial Completion (with a revised punch list of items to be completed or corrected) reflecting such changes from the preliminary certificate as Engineer believes justified after consideration of any objections from Owner.

D. At the time of receipt of the preliminary certificate of Substantial Completion, Owner and Contractor will confer regarding Owner's use or occupancy of the Work following Substantial Completion, review the builder's risk insurance policy with respect to the end of the builder's risk coverage, and confirm the transition to coverage of the Work under a permanent property insurance policy held by Owner. Unless Owner and Contractor agree otherwise in writing, Owner shall bear responsibility for security, operation, protection of the Work, property insurance, maintenance, heat, and utilities upon Owner's use or occupancy of the Work.

E. After Substantial Completion the Contractor shall promptly begin work on the punch list of items to be completed or corrected prior to final payment. In appropriate cases Contractor may submit monthly Applications for Payment for completed punch list items, following the progress payment procedures set forth above.

F. Owner shall have the right to exclude Contractor from the Site after the date of Substantial Completion subject to allowing Contractor reasonable access to remove its property and complete or correct items on the punch list.

15.04 *Partial Use or Occupancy*

A. Prior to Substantial Completion of all the Work, Owner may use or occupy any substantially completed part of the Work which has specifically been identified in the Contract Documents, or which Owner, Engineer, and Contractor agree constitutes a separately functioning and usable part of the Work that can be used by Owner for its intended purpose without significant interference with Contractor's performance of the remainder of the Work, subject to the following conditions:

1. At any time, Owner may request in writing that Contractor permit Owner to use or occupy any such part of the Work that Owner believes to be substantially complete. If and when Contractor agrees that such part of the Work is substantially complete, Contractor, Owner, and Engineer will follow the procedures of Paragraph 15.03.A through 15.03.E for that part of the Work.

2. At any time, Contractor may notify Owner and Engineer in writing that Contractor considers any such part of the Work substantially complete and request Engineer to issue a certificate of Substantial Completion for that part of the Work.

3. Within a reasonable time after either such request, Owner, Contractor, and Engineer shall make an inspection of that part of the Work to determine its status of completion. If Engineer does not consider that part of the Work to be substantially complete,

Copyright© 2018 National Society of Professional Engineers, American Council of Engineering Companies, and American Society of Civil Engineers. All rights reserved.

Engineer will notify Owner and Contractor in writing giving the reasons therefor. If Engineer considers that part of the Work to be substantially complete, the provisions of Paragraph 15.03 will apply with respect to certification of Substantial Completion of that part of the Work and the division of responsibility in respect thereof and access thereto.

4. No use or occupancy or separate operation of part of the Work may occur prior to compliance with the requirements of Paragraph 6.04 regarding builder's risk or other property insurance.

15.05 *Final Inspection*

A. Upon written notice from Contractor that the entire Work or an agreed portion thereof is complete, Engineer will promptly make a final inspection with Owner and Contractor and will notify Contractor in writing of all particulars in which this inspection reveals that the Work, or agreed portion thereof, is incomplete or defective. Contractor shall immediately take such measures as are necessary to complete such Work or remedy such deficiencies.

15.06 *Final Payment*

A. *Application for Payment*

1. After Contractor has, in the opinion of Engineer, satisfactorily completed all corrections identified during the final inspection and has delivered, in accordance with the Contract Documents, all maintenance and operating instructions, schedules, guarantees, bonds, certificates or other evidence of insurance, certificates of inspection, annotated record documents (as provided in Paragraph 7.12), and other documents, Contractor may make application for final payment.

2. The final Application for Payment must be accompanied (except as previously delivered) by:

a. all documentation called for in the Contract Documents;

b. consent of the surety, if any, to final payment;

c. satisfactory evidence that all title issues have been resolved such that title to all Work, materials, and equipment has passed to Owner free and clear of any Liens or other title defects, or will so pass upon final payment.

d. a list of all duly pending Change Proposals and Claims; and

e. complete and legally effective releases or waivers (satisfactory to Owner) of all Lien rights arising out of the Work, and of Liens filed in connection with the Work.

3. In lieu of the releases or waivers of Liens specified in Paragraph 15.06.A.2 and as approved by Owner, Contractor may furnish receipts or releases in full and an affidavit of Contractor that: (a) the releases and receipts include all labor, services, material, and equipment for which a Lien could be filed; and (b) all payrolls, material and equipment bills, and other indebtedness connected with the Work for which Owner might in any way be responsible, or which might in any way result in liens or other burdens on Owner's property, have been paid or otherwise satisfied. If any Subcontractor or Supplier fails to furnish such a release or receipt in full, Contractor may furnish a bond or other collateral satisfactory to Owner to indemnify Owner against any Lien, or Owner at its option may issue joint checks payable to Contractor and specified Subcontractors and Suppliers.

Copyright© 2018 National Society of Professional Engineers, American Council of Engineering Companies, and American Society of Civil Engineers. All rights reserved.

B. *Engineer's Review of Final Application and Recommendation of Payment*: If, on the basis of Engineer's observation of the Work during construction and final inspection, and Engineer's review of the final Application for Payment and accompanying documentation as required by the Contract Documents, Engineer is satisfied that the Work has been completed and Contractor's other obligations under the Contract have been fulfilled, Engineer will, within 10 days after receipt of the final Application for Payment, indicate in writing Engineer's recommendation of final payment and present the final Application for Payment to Owner for payment. Such recommendation will account for any set-offs against payment that are necessary in Engineer's opinion to protect Owner from loss for the reasons stated above with respect to progress payments. Otherwise, Engineer will return the Application for Payment to Contractor, indicating in writing the reasons for refusing to recommend final payment, in which case Contractor shall make the necessary corrections and resubmit the Application for Payment.

C. *Notice of Acceptability*: In support of its recommendation of payment of the final Application for Payment, Engineer will also give written notice to Owner and Contractor that the Work is acceptable, subject to stated limitations in the notice and to the provisions of Paragraph 15.07.

D. *Completion of Work*: The Work is complete (subject to surviving obligations) when it is ready for final payment as established by the Engineer's written recommendation of final payment and issuance of notice of the acceptability of the Work.

E. *Final Payment Becomes Due*: Upon receipt from Engineer of the final Application for Payment and accompanying documentation, Owner shall set off against the amount recommended by Engineer for final payment any further sum to which Owner is entitled, including but not limited to set-offs for liquidated damages and set-offs allowed under the provisions of this Contract with respect to progress payments. Owner shall pay the resulting balance due to Contractor within ~~30~~ 21 days of Owner's receipt of the final Application for Payment from Engineer.

15.07 *Waiver of Claims*

A. By making final payment, Owner waives its claim or right to liquidated damages or other damages for late completion by Contractor, except as set forth in an outstanding Claim, appeal under the provisions of Article 17, set-off, or express reservation of rights by Owner. Owner reserves all other claims or rights after final payment.

B. The acceptance of final payment by Contractor will constitute a waiver by Contractor of all claims and rights against Owner other than those pending matters that have been duly submitted as a Claim, or appealed under the provisions of Article 17.

15.08 *Correction Period*

A. If within one year after the date of Substantial Completion (or such longer period of time as may be prescribed by the Supplementary Conditions or the terms of any applicable special guarantee required by the Contract Documents), Owner gives Contractor written notice that any Work has been found to be defective, or that Contractor's repair of any damages to the Site or adjacent areas has been found to be defective, then after receipt of such notice of defect Contractor shall promptly, without cost to Owner and in accordance with Owner's written instructions:

1. correct the defective repairs to the Site or such adjacent areas;

Copyright© 2018 National Society of Professional Engineers, American Council of Engineering Companies, and American Society of Civil Engineers. All rights reserved.

2. correct such defective Work;

3. remove the defective Work from the Project and replace it with Work that is not defective, if the defective Work has been rejected by Owner, and

4. satisfactorily correct or repair or remove and replace any damage to other Work, to the work of others, or to other land or areas resulting from the corrective measures.

B. Owner shall give any such notice of defect within 60 days of the discovery that such Work or repairs is defective. If such notice is given within such 60 days but after the end of the correction period, the notice will be deemed a notice of defective Work under Paragraph 7.17.B.

C. If, after receipt of a notice of defect within 60 days and within the correction period, Contractor does not promptly comply with the terms of Owner's written instructions, or in an emergency where delay would cause serious risk of loss or damage, Owner may have the defective Work corrected or repaired or may have the rejected Work removed and replaced. Contractor shall pay all costs, losses, and damages (including but not limited to all fees and charges of engineers, architects, attorneys, and other professionals and all court or arbitration or other dispute resolution costs) arising out of or relating to such correction or repair or such removal and replacement (including but not limited to all costs of repair or replacement of work of others). Contractor's failure to pay such costs, losses, and damages within 10 days of invoice from Owner will be deemed the start of an event giving rise to a Claim under Paragraph 12.01.B, such that any related Claim must be brought within 30 days of the failure to pay.

D. In special circumstances where a particular item of equipment is placed in continuous service before Substantial Completion of all the Work, the correction period for that item may start to run from an earlier date if so provided in the Specifications.

E. Where defective Work (and damage to other Work resulting therefrom) has been corrected or removed and replaced under this paragraph, the correction period hereunder with respect to such Work will be extended for an additional period of one year after such correction or removal and replacement has been satisfactorily completed.

F. Contractor's obligations under this paragraph are in addition to all other obligations and warranties. The provisions of this paragraph are not to be construed as a substitute for, or a waiver of, the provisions of any applicable statute of limitation or repose.

ARTICLE 16—SUSPENSION OF WORK AND TERMINATION

16.01 *Owner May Suspend Work*

A. At any time and without cause, Owner may suspend the Work or any portion thereof for a period of not more than 90 consecutive days by written notice to Contractor and Engineer. Such notice will fix the date on which Work will be resumed. Contractor shall resume the Work on the date so fixed. Contractor shall be entitled to an adjustment in the Contract Price or an extension of the Contract Times directly attributable to any such suspension. Any Change Proposal seeking such adjustments must be submitted no later than 30 days after the date fixed for resumption of Work.

Copyright© 2018 National Society of Professional Engineers, American Council of Engineering Companies, and American Society of Civil Engineers. All rights reserved.

16.02 *Owner May Terminate for Cause*

A. The occurrence of any one or more of the following events will constitute a default by Contractor and justify termination for cause:

1. Contractor's persistent failure to perform the Work in accordance with the Contract Documents (including, but not limited to, failure to supply sufficient skilled workers or suitable materials or equipment, or failure to adhere to the Progress Schedule);

2. Failure of Contractor to perform or otherwise to comply with a material term of the Contract Documents;

3. Contractor's disregard of Laws or Regulations of any public body having jurisdiction; or

4. Contractor's repeated disregard of the authority of Owner or Engineer.

B. If one or more of the events identified in Paragraph 16.02.A occurs, then after giving Contractor (and any surety) 10 days' written notice that Owner is considering a declaration that Contractor is in default and termination of the Contract, Owner may proceed to:

1. declare Contractor to be in default, and give Contractor (and any surety) written notice that the Contract is terminated; and

2. enforce the rights available to Owner under any applicable performance bond.

C. Subject to the terms and operation of any applicable performance bond, if Owner has terminated the Contract for cause, Owner may exclude Contractor from the Site, take possession of the Work, incorporate in the Work all materials and equipment stored at the Site or for which Owner has paid Contractor but which are stored elsewhere, and complete the Work as Owner may deem expedient.

D. Owner may not proceed with termination of the Contract under Paragraph 16.02.B if Contractor within 7 days of receipt of notice of intent to terminate begins to correct its failure to perform and proceeds diligently to cure such failure.

E. If Owner proceeds as provided in Paragraph 16.02.B, Contractor shall not be entitled to receive any further payment until the Work is completed. If the unpaid balance of the Contract Price exceeds the cost to complete the Work, including all related claims, costs, losses, and damages (including but not limited to all fees and charges of engineers, architects, attorneys, and other professionals) sustained by Owner, such excess will be paid to Contractor. If the cost to complete the Work including such related claims, costs, losses, and damages exceeds such unpaid balance, Contractor shall pay the difference to Owner. Such claims, costs, losses, and damages incurred by Owner will be reviewed by Engineer as to their reasonableness and, when so approved by Engineer, incorporated in a Change Order. When exercising any rights or remedies under this paragraph, Owner shall not be required to obtain the lowest price for the Work performed.

F. Where Contractor's services have been so terminated by Owner, the termination will not affect any rights or remedies of Owner against Contractor then existing or which may thereafter accrue, or any rights or remedies of Owner against Contractor or any surety under any payment bond or performance bond. Any retention or payment of money due Contractor by Owner will not release Contractor from liability.

G. If and to the extent that Contractor has provided a performance bond under the provisions of Paragraph 6.01.A, the provisions of that bond will govern over any inconsistent provisions of Paragraphs 16.02.B and 16.02.D.

Copyright© 2018 National Society of Professional Engineers, American Council of Engineering Companies, and American Society of Civil Engineers. All rights reserved.

16.03 *Owner May Terminate for Convenience*

A. Upon 7 days' written notice to Contractor and Engineer, Owner may, without cause and without prejudice to any other right or remedy of Owner, terminate the Contract. In such case, Contractor shall be paid for (without duplication of any items):

1. completed and acceptable Work executed in accordance with the Contract Documents prior to the effective date of termination, including fair and reasonable sums for overhead and profit on such Work;

2. expenses sustained prior to the effective date of termination in performing services and furnishing labor, materials, or equipment as required by the Contract Documents in connection with uncompleted Work, plus fair and reasonable sums for overhead and profit on such expenses; and

3. other reasonable expenses directly attributable to termination, including costs incurred to prepare a termination for convenience cost proposal.

B. Contractor shall not be paid for any loss of anticipated profits or revenue, post-termination overhead costs, or other economic loss arising out of or resulting from such termination.

16.04 *Contractor May Stop Work or Terminate*

A. If, through no act or fault of Contractor, (1) the Work is suspended for more than 90 consecutive days by Owner or under an order of court or other public authority, or (2) Engineer fails to act on any Application for Payment within 30 days after it is submitted, or (3) Owner fails for 30 days to pay Contractor any sum finally determined to be due, then Contractor may, upon 7 days' written notice to Owner and Engineer, and provided Owner or Engineer do not remedy such suspension or failure within that time, terminate the contract and recover from Owner payment on the same terms as provided in Paragraph 16.03.

B. In lieu of terminating the Contract and without prejudice to any other right or remedy, if Engineer has failed to act on an Application for Payment within 30 days after it is submitted, or Owner has failed for 30 days to pay Contractor any sum finally determined to be due, Contractor may, 7 days after written notice to Owner and Engineer, stop the Work until payment is made of all such amounts due Contractor, including interest thereon. The provisions of this paragraph are not intended to preclude Contractor from submitting a Change Proposal for an adjustment in Contract Price or Contract Times or otherwise for expenses or damage directly attributable to Contractor's stopping the Work as permitted by this paragraph.

ARTICLE 17—FINAL RESOLUTION OF DISPUTES

17.01 *Methods and Procedures*

A. *Disputes Subject to Final Resolution*: The following disputed matters are subject to final resolution under the provisions of this article:

1. A timely appeal of an approval in part and denial in part of a Claim, or of a denial in full, pursuant to Article 12; and

2. Disputes between Owner and Contractor concerning the Work, or obligations under the Contract Documents, that arise after final payment has been made.

Copyright© 2018 National Society of Professional Engineers, American Council of Engineering Companies, and American Society of Civil Engineers. All rights reserved.

B. *Final Resolution of Disputes*: For any dispute subject to resolution under this article, Owner or Contractor may:

1. elect in writing to invoke the dispute resolution process provided for in the Supplementary Conditions;
2. agree with the other party to submit the dispute to another dispute resolution process; or
3. if no dispute resolution process is provided for in the Supplementary Conditions or mutually agreed to, give written notice to the other party of the intent to submit the dispute to a court of competent jurisdiction.

ARTICLE 18—MISCELLANEOUS

18.01 *Giving Notice*

A. Whenever any provision of the Contract requires the giving of written notice to Owner, Engineer, or Contractor, it will be deemed to have been validly given only if delivered:

1. in person, by a commercial courier service or otherwise, to the recipient's place of business;
2. by registered or certified mail, postage prepaid, to the recipient's place of business; or
3. by e-mail to the recipient, with the words "Formal Notice" or similar in the e-mail's subject line.

18.02 *Computation of Times*

A. When any period of time is referred to in the Contract by days, it will be computed to exclude the first and include the last day of such period. If the last day of any such period falls on a Saturday or Sunday or on a day made a legal holiday by the law of the applicable jurisdiction, such day will be omitted from the computation.

18.03 *Cumulative Remedies*

A. The duties and obligations imposed by these General Conditions and the rights and remedies available hereunder to the parties hereto are in addition to, and are not to be construed in any way as a limitation of, any rights and remedies available to any or all of them which are otherwise imposed or available by Laws or Regulations, by special warranty or guarantee, or by other provisions of the Contract. The provisions of this paragraph will be as effective as if repeated specifically in the Contract Documents in connection with each particular duty, obligation, right, and remedy to which they apply.

18.04 *Limitation of Damages*

A. With respect to any and all Change Proposals, Claims, disputes subject to final resolution, and other matters at issue, neither Owner nor Engineer, nor any of their officers, directors, members, partners, employees, agents, consultants, or subcontractors, shall be liable to Contractor for any claims, costs, losses, or damages sustained by Contractor on or in connection with any other project or anticipated project.

18.05 *No Waiver*

A. A party's non-enforcement of any provision will not constitute a waiver of that provision, nor will it affect the enforceability of that provision or of the remainder of this Contract.

Copyright© 2018 National Society of Professional Engineers, American Council of Engineering Companies, and American Society of Civil Engineers. All rights reserved.

18.06 *Survival of Obligations*

A. All representations, indemnifications, warranties, and guarantees made in, required by, or given in accordance with the Contract, as well as all continuing obligations indicated in the Contract, will survive final payment, completion, and acceptance of the Work or termination of the Contract or of the services of Contractor.

18.07 *Controlling Law*

A. This Contract is to be governed by the law of the state in which the Project is located.

18.08 *Assignment of Contract*

A. Unless expressly agreed to elsewhere in the Contract, no assignment by a party to this Contract of any rights under or interests in the Contract will be binding on the other party without the written consent of the party sought to be bound; and, specifically but without limitation, money that may become due and money that is due may not be assigned without such consent (except to the extent that the effect of this restriction may be limited by law), and unless specifically stated to the contrary in any written consent to an assignment, no assignment will release or discharge the assignor from any duty or responsibility under the Contract.

18.09 *Successors and Assigns*

A. Owner and Contractor each binds itself, its successors, assigns, and legal representatives to the other party hereto, its successors, assigns, and legal representatives in respect to all covenants, agreements, and obligations contained in the Contract Documents.

18.10 *Headings*

A. Article and paragraph headings are inserted for convenience only and do not constitute parts of these General Conditions.

Copyright© 2018 National Society of Professional Engineers, American Council of Engineering Companies, and American Society of Civil Engineers. All rights reserved.

ATTACHMENT 2 - SUPPLEMENTARY CONDITIONS OF THE CONSTRUCTION CONTRACT

TABLE OF CONTENTS

Page

Article 1— Definitions and Terminology 894
Article 2— Preliminary Matters 894
Article 3— Contract Documents: Intent, Requirements, Reuse..... 94
Article 4— Commencement and Progress of the Work 94
Article 5— Site, Subsurface and Physical Conditions, Hazardoud Environmental Conditions 940
Article 6— Bonds and Insurance.....961
Article 7— Contractor's Responsibilities.....101
Article 8— Other Work at the Site 102
Article 9— Owner's Responsibilities 102
Article 10— Engineer's Status During Construction.....103
Article 11— Changes to the Contract.....1040
Article 12— Claims 1040
Article 13— Cost of Work; Allowances, Unit Price Work.....1040
Article 14— Tests and Inspections; Correction, Removal, or Accceptance of Defective Work 1051
Article 15— Payments to Contractor, Set Offs; Completions; Correction Period.....1051
Article 16— Suspension of Work and Termination 1062
Article 17— Final Resolutions of Disputes.....1062
Article 18— Miscellaneous.....1084
Exhibit A— Software Requirements for Electronic Document Exchange 111

EJCDC® C-800, Supplementary Conditions of the Construction Contract.
Copyright© 2018 National Society of Professional Engineers, American Council of Engineering Companies, and American Society of Civil Engineers. All rights reserved.
Modified to include RD edits from RUS Bulletin 1780-26 (6/16/2020).

SUPPLEMENTARY CONDITIONS OF THE CONSTRUCTION CONTRACT

These Supplementary Conditions amend or supplement EJCDC® C-700, Standard General Conditions of the Construction Contract (2018). The General Conditions remain in full force and effect except as amended.

The terms used in these Supplementary Conditions have the meanings stated in the General Conditions. Additional terms used in these Supplementary Conditions have the meanings stated below, which are applicable to both the singular and plural thereof.

The address system used in these Supplementary Conditions is the same as the address system used in the General Conditions, with the prefix "SC" added—for example, “Paragraph SC-4.05.”

ARTICLE 1—DEFINITIONS AND TERMINOLOGY

SC-1.01.A.8 – Add the following at the end of the Paragraph:

The Change Order form to be used on this Project is EJCDC C-941 (2018). Agency approval is required before Change Orders are effective.

SC-1.01.A.50 – Add the following at the end of the Paragraph:

The Work Change Directive form to be used on this Project is EJCDC C-940 (2018). Agency approval is required before a Work Change Directive is issued.

ARTICLE 2—PRELIMINARY MATTERS

2.01 Delivery of Bonds and Evidence of Insurance

SC-2.01 Delete Paragraphs 2.01.B. and C. in their entirety and insert the following in their place:

B. Evidence of Contractor’s Insurance: When Contractor delivers the signed counterparts of the Agreement to Owner, Contractor shall also deliver to Owner copies of the policies (including all endorsements, and identification of applicable self-insured retentions and deductibles) of insurance required to be provided by Contractor in this Contract. Contractor may block out (redact) any confidential premium or pricing information contained in any policy or endorsement furnished under this provision.

C. Evidence of Owner’s Insurance: After receipt from Contractor of the signed counterparts of the Agreement and all required bonds and insurance documentation, if Contractor requests, Owner shall promptly deliver to Contractor copies of the policies of insurance to be provided by Owner in this Contract (if any). Owner may block out (redact) any confidential premium or pricing information contained in any policy or endorsement furnished under this provision.

Copyright© 2018 National Society of Professional Engineers, American Council of Engineering Companies, and American Society of Civil Engineers. All rights reserved.

SC-2.06 Delete Paragraphs 2.06.B and 2.06.C in their entirety and insert the following in their place:

B. Electronic Documents Protocol: The parties shall conform to the following provisions in Paragraphs 2.06.B and 2.06.C, together referred to as the Electronic Documents Protocol ("EDP" or "Protocol") for exchange of electronic transmittals.

1. Basic Requirements

a. To the fullest extent practical, the parties agree to and will transmit and accept Electronic Documents in an electronic or digital format using the procedures described in this Protocol. Use of the Electronic Documents and any information contained therein is subject to the requirements of this Protocol and other provisions of the Contract.

b. The contents of the information in any Electronic Document will be the responsibility of the transmitting party.

c. Electronic Documents as exchanged by this Protocol may be used in the same manner as the printed versions of the same documents that are exchanged using non-electronic format and methods, subject to the same governing requirements, limitations, and restrictions, set forth in the Contract Documents.

d. Except as otherwise explicitly stated herein, the terms of this Protocol will be incorporated into any other agreement or subcontract between a party and any third party for any portion of the Work on the Project, or any Project-related services, where that third party is, either directly or indirectly, required to exchange Electronic Documents with a party or with Engineer. Nothing herein will modify the requirements of the Contract regarding communications between and among the parties and their subcontractors and consultants.

e. When transmitting Electronic Documents, the transmitting party makes no representations as to long term compatibility, usability, or readability of the items resulting from the receiving party's use of software application packages, operating systems, or computer hardware differing from those established in this Protocol.

f. Nothing herein negates any obligation 1) in the Contract to create, provide, or maintain an original printed record version of Drawings and Specifications, signed and sealed according to applicable Laws and Regulations; 2) to comply with any applicable Law or Regulation governing the signing and sealing of design documents or the signing and electronic transmission of any other documents; or 3) to comply with the notice requirements of Paragraph 18.01 of the General Conditions.

2. System Infrastructure for Electronic Document Exchange

a. Each party will provide hardware, operating system(s) software, internet, e-mail, and large file transfer functions ("System Infrastructure") at its own cost and sufficient for complying with the EDP requirements. With the exception of minimum standards set forth in this EDP, and any explicit system requirements

Copyright© 2018 National Society of Professional Engineers, American Council of Engineering Companies, and American Society of Civil Engineers. All rights reserved.

specified by attachment to this EDP, it is the obligation of each party to determine, for itself, its own System Infrastructure.

1) The maximum size of an email attachment for exchange of Electronic Documents under this EDP is **10** MB. Attachments larger than that may be exchanged using large file transfer functions or physical media.

2) Each Party assumes full and complete responsibility for any and all of its own costs, delays, deficiencies, and errors associated with converting, translating, updating, verifying, licensing, or otherwise enabling its System Infrastructure, including operating systems and software, for use with respect to this EDP.

b. Each party is responsible for its own system operations, security, back-up, archiving, audits, printing resources, and other Information Technology ("IT") for maintaining operations of its System Infrastructure during the Project, including coordination with the party's individual(s) or entity responsible for managing its System Infrastructure and capable of addressing routine communications and other IT issues affecting the exchange of Electronic Documents.

c. Each party will operate and maintain industry-standard, industry-accepted, ISO-standard, commercial-grade security software and systems that are intended to protect the other party from: software viruses and other malicious software like worms, trojans, adware; data breaches; loss of confidentiality; and other threats in the transmission to or storage of information from the other parties, including transmission of Electronic Documents by physical media such as CD/DVD/flash drive/hard drive. To the extent that a party maintains and operates such security software and systems, it shall not be liable to the other party for any breach of system security.

d. In the case of disputes, conflicts, or modifications to the EDP required to address issues affecting System Infrastructure, the parties shall cooperatively resolve the issues; but, failing resolution, the Owner is authorized to make and require reasonable and necessary changes to the EDP to effectuate its original intent. If the changes cause additional cost or time to Contractor, not reasonably anticipated under the original EDP, Contractor may seek an adjustment in price or time under the appropriate process in the Contract.

e. Each party is responsible for its own back-up and archive of documents sent and received during the term of the contract under this EDP, unless this EDP establishes a Project document archive, either as part of a mandatory Project website or other communications protocol, upon which the parties may rely for document archiving during the specified term of operation of such Project document archive. Further, each party remains solely responsible for its own post-Project back-up and archive of Project documents after the term of the Contract, or after termination of the Project document archive, if one is established, for as long as required by the Contract and as each party deems necessary for its own purposes.

Copyright© 2018 National Society of Professional Engineers, American Council of Engineering Companies, and American Society of Civil Engineers. All rights reserved.

f. If a receiving party receives an obviously corrupted, damaged, or unreadable Electronic Document, the receiving party will advise the sending party of the incomplete transmission.

g. The parties will bring any non-conforming Electronic Documents into compliance with the EDP. The parties will attempt to complete a successful transmission of the Electronic Document or use an alternative delivery method to complete the communication.

h. The Owner will operate a Project information management system (also referred to in this EDP as "Project Website") for use of Owner, Engineer and Contractor during the Project for exchange and storage of Project-related communications and information. Except as otherwise provided in this EDP or the General Conditions, use of the Project Website by the parties as described in this Paragraph will be mandatory for exchange of Project documents, communications, submittals, and other Project-related information. The following conditions and standards will govern use of the Project Website:

1) Describe the period of time during which the Project Website will be operated and be available for reliance by the parties;

2) Provide any minimum system infrastructure, software licensing and security standards for access to and use of the Project Website;

3) Describe the types and extent of services to be provided at the Project Website (such as large file transfer, email, communication and document archives, etc.); and

4) Include any other Project Website attributes that may be pertinent to Contractor's use of the facility and pricing of such use.

C. Software Requirements for Electronic Document Exchange; Limitations

1. Each party will acquire the software and software licenses necessary to create and transmit Electronic Documents and to read and to use any Electronic Documents received from the other party (and if relevant from third parties), using the software formats required in this section of the EDP.

a. Prior to using any updated version of the software required in this section for sending Electronic Documents to the other party, the originating party will first notify and receive concurrence from the other party for use of the updated version or adjust its transmission to comply with this EDP.

2. The parties agree not to intentionally edit, reverse engineer, decrypt, remove security or encryption features, or convert to another format for modification purposes any Electronic Document or information contained therein that was transmitted in a software data format, including Portable Document Format (PDF), intended by sender not to be modified, unless the receiving party obtains the permission of the sending party or is citing or quoting excerpts of the Electronic Document for Project purposes.

3. Software and data formats for exchange of Electronic Documents will conform to the requirements set forth in Exhibit A to this EDP, including software versions, if listed.

Copyright© 2018 National Society of Professional Engineers, American Council of Engineering Companies, and American Society of Civil Engineers. All rights reserved.

SC-2.06 Supplement Paragraph 2.06 of the General Conditions by adding the following paragraph:

D. Requests by Contractor for Electronic Documents in Other Formats

1. Release of any Electronic Document versions of the Project documents in formats other than those identified in the Electronic Documents Protocol (if any) or elsewhere in the Contract will be at the sole discretion of the Owner.

2. To extent determined by Owner, in its sole discretion, to be prudent and necessary, release of Electronic Documents versions of Project documents and other Project information requested by Contractor ("Request") in formats other than those identified in the Electronic Documents Protocol (if any) or elsewhere in the Contract will be subject to the provisions of the Owner's response to the Request, and to the following conditions to which Contractor agrees:

a. The content included in the Electronic Documents created by Engineer and covered by the Request was prepared by Engineer as an internal working document for Engineer's purposes solely, and is being provided to Contractor on an "AS IS" basis without any warranties of any kind, including, but not limited to any implied warranties of fitness for any purpose. As such, Contractor is advised and acknowledges that the content may not be suitable for Contractor's application, or may require substantial modification and independent verification by Contractor. The content may include limited resolution of models, not-to-scale schematic representations and symbols, use of notes to convey design concepts in lieu of accurate graphics, approximations, graphical simplifications, undocumented intermediate revisions, and other devices that may affect subsequent reuse.

b. Electronic Documents containing text, graphics, metadata, or other types of data that are provided by Engineer to Contractor under the request are only for convenience of Contractor. Any conclusion or information obtained or derived from such data will be at the Contractor's sole risk and the Contractor waives any claims against Engineer or Owner arising from use of data in Electronic Documents covered by the Request.

c. Contractor shall indemnify and hold harmless Owner and Engineer and their subconsultants from all claims, damages, losses, and expenses, including attorneys' fees and defense costs arising out of or resulting from Contractor's use, adaptation, or distribution of any Electronic Documents provided under the Request.

d. Contractor agrees not to sell, copy, transfer, forward, give away or otherwise distribute this information (in source or modified file format) to any third party without the direct written authorization of Engineer, unless such distribution is specifically identified in the Request and is limited to Contractor's subcontractors. Contractor warrants that subsequent use by Contractor's subcontractors complies with all terms of the Contract Documents and Owner's response to Request.

3. In the event that Owner elects to provide or directs the Engineer to provide to Contractor any Contractor-requested Electronic Document versions of Project

Copyright© 2018 National Society of Professional Engineers, American Council of Engineering Companies, and American Society of Civil Engineers. All rights reserved.

information that is not explicitly identified in the Contract Documents as being available to Contractor, the Owner shall be reimbursed by Contractor on an hourly basis for any engineering costs necessary to create or otherwise prepare the data in a manner deemed appropriate by Engineer.

ARTICLE 3—CONTRACT DOCUMENTS: INTENT, REQUIREMENTS, REUSE

3.01 Intent

SC-3.01 Add the following new subparagraph after Paragraph 3.01.A:

1. Requirements stated in the following CSI MasterFormat® divisions apply to Technical Sections.
    a. Division 00 – Procurement and Contracting Requirements, from Document 00500 and higher.
    b. Division 01 – General Requirements.

ARTICLE 4—COMMENCEMENT AND PROGRESS OF THE WORK

SC-4.01.A – Delete the last sentence of paragraph.

4.05 Delays in Contractor's Progress

SC-4.05 Amend Paragraph 4.05.C by adding the following subparagraphs:

5. Weather-Related Delays
    a. If "abnormal weather conditions" as set forth in Paragraph 4.05.C.2 of the General Conditions are the basis for a request for an equitable adjustment in the Contract Times, such request must be documented by data substantiating each of the following: 1) that weather conditions were abnormal for the period of time in which the delay occurred, 2) that such weather conditions could not have been reasonably anticipated, and 3) that such weather conditions had an adverse effect on the Work as scheduled. Extreme or unusual weather that is typical for a given region, elevation, or season should not be considered abnormal weather conditions. Requests for time extensions due to abnormal weather conditions will be submitted to the Engineer within five days of the end of the abnormal weather condition event. It is the responsibility of the Contractor to provide the information listed in SC 4.05.C.5.b.
    b. The existence of abnormal weather conditions will not relieve Contractor of the obligation to demonstrate and document that delays caused by abnormal weather are specific to the planned work activities or that such activities thus delayed were on Contractor's then-current Progress Schedule's critical path for the Project.

ARTICLE 5—SITE, SUBSURFACE AND PHYSICAL CONDITIONS, HAZARDOUS ENVIRONMENTAL CONDITIONS

5.03 Subsurface and Physical Conditions

Copyright© 2018 National Society of Professional Engineers, American Council of Engineering Companies, and American Society of Civil Engineers. All rights reserved.

SC-5.03 Add the following new paragraphs immediately after Paragraph 5.03.D:

E. The following table lists the reports of explorations and tests of subsurface conditions at or adjacent to the Site that contain Technical Data, and specifically identifies the Technical Data in the report upon which Contractor may rely:

Report Title	Date of Report	Technical Data
Geotechnical Engineering Services Report, Canyon Road Water Treatment Plant Additions	9/1/2020	Recommendations for foundation design, slab support, pavement design, and site grading
Geotechnical Engineering Services Report, Canyon Road Water Treatment Plant Additions, Addendum 1	10/8/2020	Additional foundation alternative for flocculation motor control building

F. The following table lists the drawings of existing physical conditions at or adjacent to the Site, including those drawings depicting existing surface or subsurface structures at or adjacent to the Site (except Underground Facilities), that contain Technical Data, and specifically identifies the Technical Data upon which Contractor may rely: **[If there are no such drawings, so indicate in the table.]**

Drawings Title	Date of Drawings	Technical Data
Various drawings exist and can be made accessible to Contractor	Various	Various Technical Data

G. Contractor may examine copies of reports and drawings identified in SC-5.03.E and SC-5.03.F that were not included with the Bidding Documents on City of Santa Fe website, or may request copies from Engineer.

5.06 *Hazardous Environmental Conditions*

SC-5.06 Add the following new paragraphs immediately after Paragraph 5.06.A.3:

4. The following table lists the reports known to Owner relating to Hazardous Environmental Conditions at or adjacent to the Site, and the Technical Data (if any) upon which Contractor may rely: There are no reports known to Owner of

Copyright© 2018 National Society of Professional Engineers, American Council of Engineering Companies, and American Society of Civil Engineers. All rights reserved.

Hazardous Environmental Conditions, however, there are regular chemical deliveries to the site, some of which may be deemed hazardous.

ARTICLE 6—BONDS AND INSURANCE

WHERE A CONFLICT EXISTS BETWEEN THE INSURANCE REQUIREMENTS IN THE CONTRACT AND THOSE IN THE SUPPLEMENTARY CONDITIONS, THE MORE STRINGENT CONDITION (OR HIGHER LIMIT) SHALL BE REQUIRED.

6.01 Performance, Payment, and Other Bonds

SC-6.01 Add the following paragraphs immediately after Paragraph 6.01.A:

1. Required Performance Bond Form: The performance bond that Contractor furnishes will be in the form of EJCDC® C-610, Performance Bond (2010, 2013, or 2018 edition), or equivalent.
2. Required Payment Bond Form: The payment bond that Contractor furnishes will be in the form of EJCDC® C-615, Payment Bond (2010, 2013, or 2018 edition), or equivalent.

SC-6.01 Add the following paragraphs immediately after Paragraph 6.01.B:

SC-6.01 Add the following paragraphs immediately after Paragraph 6.01.B:

1. Contractor shall furnish a fully executed warranty bond issued in the form of EJCDC® C-612, Warranty Bond (2018) prior to or with the final application for payment, and in any event no later than 11 months after Substantial Completion.
2. The Warranty Bond must be in a bond amount of 25 percent of the final contract price.
3. The warranty bond period will extend to the end of the correction period, as specified in SC 15.08.A.
4. The warranty bond must be issued by the same surety that issues the performance bond required under Paragraph 6.01.A of the General Conditions.

6.02 Insurance—General Provisions

SC-6.02 Add the following paragraph immediately after Paragraph 6.02.B:

1. Contractor may obtain worker's compensation insurance from an insurance company that has not been rated by A.M. Best, provided that such company (a) is domiciled in the state in which the Project is located, (b) is certified or authorized as a worker's compensation insurance provider by the appropriate state agency, and (c) has been accepted to provide worker's compensation insurance for similar projects by the state within the last 12 months.

SC-6.02.E – Delete paragraph in its entirety and insert "Deleted".

6.03 Contractor's Insurance

Copyright© 2018 National Society of Professional Engineers, American Council of Engineering Companies, and American Society of Civil Engineers. All rights reserved.

SC-6.03 Delete the phrase "and the Engineer, and any individuals or entities identified" in Paragraph 6.03.C.1.

SC-6.03 Supplement Paragraph 6.03 with the following provisions in Paragraph 6.03.C.1: Owner shall be listed as City of Santa Fe, P.O. Box 909, Santa Fe, New Mexico 87504.

SC-6.03 Supplement Paragraph 6.03 with the following provisions after Paragraph 6.03.C.5:

E. Workers' Compensation and Employer's Liability: Contractor shall purchase and maintain workers' compensation and employer's liability insurance, including, as applicable, stop-gap employer's liability coverage for monopolistic states, and foreign voluntary workers' compensation (from available sources, notwithstanding the jurisdictional requirement of Paragraph 6.02.B of the General Conditions). **Note**: *** whichever is greater.** See table below.

Workers' Compensation and Related Policies	**Policy limits of not less than:**
Workers' Compensation	
State	Statutory or $500K*****
Applicable Federal (e.g., Longshoreman's)	Statutory
Foreign voluntary workers' compensation (employer's responsibility coverage), if applicable	Statutory

F. Commercial General Liability—Claims Covered: Contractor shall purchase and maintain commercial general liability insurance, covering all operations by or on behalf of Contractor, on an occurrence basis, against claims for:

1. damages because of bodily injury, sickness or disease, or death of any person other than Contractor's employees,
2. damages insured by reasonably available personal injury liability coverage, and
3. damages because of injury to or destruction of tangible property wherever located, including loss of use resulting therefrom.

G. Commercial General Liability—Form and Content: Contractor's commercial liability policy must be written on a 1996 (or later) Insurance Services Organization, Inc. (ISO) commercial general liability form (occurrence form) and include the following coverages and endorsements:

1. Products and completed operations coverage.
   a. Such insurance must be maintained for three years after final payment.
   b. Contractor shall furnish Owner and each other additional insured (as identified in the Supplementary Conditions or elsewhere in the Contract) evidence of continuation of such insurance at final payment and three years thereafter.
2. Blanket contractual liability coverage, including but not limited to coverage of Contractor's contractual indemnity obligations in Paragraph 7.18.

Copyright© 2018 National Society of Professional Engineers, American Council of Engineering Companies, and American Society of Civil Engineers. All rights reserved.

3. Severability of interests and no insured-versus-insured or cross-liability exclusions.
4. Underground, explosion, and collapse coverage.
5. Personal injury coverage.
6. Additional insured endorsements that include both ongoing operations and products and completed operations coverage through ISO Endorsements CG 20 10 10 01 and CG 20 37 10 01 (together). If Contractor demonstrates to Owner that the specified ISO endorsements are not commercially available, then Contractor may satisfy this requirement by providing equivalent endorsements.
7. For design professional additional insureds, ISO Endorsement CG 20 32 07 04 "Additional Insured—Engineers, Architects or Surveyors Not Engaged by the Named Insured" or its equivalent.

H. Commercial General Liability—Excluded Content: The commercial general liability insurance policy, including its coverages, endorsements, and incorporated provisions, must not include any of the following:

1. Any modification of the standard definition of "insured contract" (except to delete the railroad protective liability exclusion if Contractor is required to indemnify a railroad or others with respect to Work within 50 feet of railroad property).
2. Any exclusion for water intrusion or water damage.
3. Any provisions resulting in the erosion of insurance limits by defense costs other than those already incorporated in ISO form CG 00 01.
4. Any exclusion of coverage relating to earth subsidence or movement.
5. Any exclusion for the insured's vicarious liability, strict liability, or statutory liability (other than worker's compensation).
6. Any limitation or exclusion based on the nature of Contractor's work.
7. Any professional liability exclusion broader in effect than the most recent edition of ISO form CG 22 79.

I. Commercial General Liability—Minimum Policy Limits

Commercial General Liability	Policy limits of not less than:
General Aggregate	$ 2,000,000
Products—Completed Operations Aggregate	$ 2,000,000
Personal and Advertising Injury	$ 1,000,000
Bodily Injury and Property Damage—Each Occurrence	$ 2,000,000

J. Automobile Liability: Contractor shall purchase and maintain automobile liability insurance for damages because of bodily injury or death of any person or property damage arising out of the ownership, maintenance, or use of any motor vehicle. The automobile liability policy must be written on an occurrence basis.

Copyright© 2018 National Society of Professional Engineers, American Council of Engineering Companies, and American Society of Civil Engineers. All rights reserved.

Automobile Liability	Policy limits of not less than:
Combined Single Limit	
Combined Single Limit (Bodily Injury and Property Damage)	$ 1,000,000

K. Umbrella or Excess Liability: Contractor shall purchase and maintain umbrella or excess liability insurance written over the underlying employer's liability, commercial general liability, and automobile liability insurance described in the Paragraphs above. The coverage afforded must be at least as broad as that of each and every one of the underlying policies.

Excess or Umbrella Liability	Policy limits of not less than:
Each Occurrence	$ 5,000,000
General Aggregate	$ 5,000,000

L. Using Umbrella or Excess Liability Insurance to Meet CGL and Other Policy Limit Requirements: Contractor may meet the policy limits specified for employer's liability, commercial general liability, and automobile liability through the primary policies alone, or through combinations of the primary insurance policy's policy limits and partial attribution of the policy limits of an umbrella or excess liability policy that is at least as broad in coverage as that of the underlying policy, as specified herein. If such umbrella or excess liability policy was required under this Contract, at a specified minimum policy limit, such umbrella or excess policy must retain a minimum limit of $**[specify amount]** after accounting for partial attribution of its limits to underlying policies, as allowed above.

M. Contractor's Pollution Liability Insurance: Contractor shall purchase and maintain a policy covering third-party injury and property damage, including cleanup costs, as a result of pollution conditions arising from Contractor's operations and completed operations. This insurance must be maintained for no less than three years after final completion.

Contractor's Pollution Liability	Policy limits of not less than:
Each Occurrence/Claim	$ 1,000,000
General Aggregate	$ 2,000,000

N. Contractor's Professional Liability Insurance: If Contractor will provide or furnish professional services under this Contract, through a delegation of professional design services or otherwise, then Contractor shall be responsible for purchasing and maintaining applicable professional liability insurance. This insurance must cover negligent acts, errors, or omissions in the performance of professional design or related services by the insured or others for whom the insured is legally liable. The insurance must be maintained throughout the duration of the Contract and for a minimum of two

Copyright© 2018 National Society of Professional Engineers, American Council of Engineering Companies, and American Society of Civil Engineers. All rights reserved.

years after Substantial Completion. The retroactive date on the policy must pre-date the commencement of furnishing services on the Project.

If Contractor will not be providing professional services under this contract, a waiver must be obtained from Owner.

Contractor's Professional Liability (if required)	Policy limits of not less than:
Each Claim	$ 1,000,000
Annual Aggregate	$ 1,000,000

6.04 Builder's Risk and Other Property Insurance

SC-6.04 Delete Paragraph 6.04.A and insert the following in its place:

A. Owner shall purchase and maintain builder's risk insurance upon the Work on a completed value basis, in the amount of the Work's full insurable replacement cost (subject to such deductible amounts as may be provided in the Supplementary Conditions or required by Laws and Regulations). The specific requirements applicable to the builder's risk insurance are set forth in the Supplementary Conditions.

SC-6.04 Supplement Paragraph 6.04 of the General Conditions with the following provisions:

F. Builder's Risk Requirements: The builder's risk insurance must:

1. be written on a builder's risk "all risk" policy form that at a minimum includes insurance for physical loss or damage to the Work, temporary buildings, falsework, and materials and equipment stored and in transit, and must not exclude the coverage of the following risks: fire; windstorm; hail; flood; earthquake, volcanic activity, and other earth movement; lightning; riot; civil commotion; terrorism; vehicle impact; aircraft; smoke; theft; vandalism and malicious mischief; mechanical breakdown, boiler explosion, and artificially generated electric current; collapse; explosion; debris removal; demolition occasioned by enforcement of Laws and Regulations; and water damage (other than that caused by flood).

    a. Such policy will include an exception that results in coverage for ensuing losses from physical damage or loss with respect to any defective workmanship, methods, design, or materials exclusions.

    b. If insurance against mechanical breakdown, boiler explosion, and artificially generated electric current; earthquake, volcanic activity, and other earth movement; or flood, are not commercially available under builder's risk policies, by endorsement or otherwise, such insurance will be provided through other insurance policies acceptable to Owner and Contractor.

2. cover, as insured property, at least the following: (a) the Work and all materials, supplies, machinery, apparatus, equipment, fixtures, and other property of a similar nature that are to be incorporated into or used in the preparation, fabrication, construction, erection, or completion of the Work, including Owner-furnished or assigned property; (b) spare parts inventory required within the scope of the Contract; and (c) temporary works which are not intended to form part of the

Copyright© 2018 National Society of Professional Engineers, American Council of Engineering Companies, and American Society of Civil Engineers. All rights reserved.

permanent constructed Work but which are intended to provide working access to the Site, or to the Work under construction, or which are intended to provide temporary support for the Work under construction, including scaffolding, form work, fences, shoring, falsework, and temporary structures.

3. cover expenses incurred in the repair or replacement of any insured property (including but not limited to fees and charges of contractors, engineers, and architects).

4. extend to cover damage or loss to insured property while in temporary storage at the Site or in a storage location outside the Site (but not including property stored at the premises of a manufacturer or Supplier).

5. extend to cover damage or loss to insured property while in transit.

6. allow for the waiver of the insurer's subrogation rights, as set forth in this Contract.

7. allow for partial occupancy or use by Owner by endorsement, and without cancellation or lapse of coverage.

8. include performance/hot testing and start-up, if applicable.

9. be maintained in effect until the Work is complete, as set forth in Paragraph 15.06.D of the General Conditions, or until written confirmation of Owner's procurement of property insurance following Substantial Completion, whichever occurs first.

10 include as named insureds the Owner, Contractor, Subcontractors (of every tier), and any other individuals or entities required by this Contract to be insured under such builder's risk policy. For purposes of Paragraphs 6.04, 6.05, and 6.06 of the General Conditions, and this and all other corresponding Supplementary Conditions, the parties required to be insured will be referred to collectively as "insureds."

11. include, in addition to the Contract Price amount, the value of the following equipment and materials to be installed by the Contractor but furnished by the Owner or third parties:

    a. **NONE**

SC-6.04 Supplement Paragraph 6.04 of the General Conditions with the following provisions:

H. Builder's Risk and Other Property Insurance Deductibles: The purchaser of any required builder's risk, installation floater, or other property insurance will be responsible for costs not covered because of the application of a policy deductible.

1. The builder's risk policy (or if applicable the installation floater) will be subject to a deductible amount of no more than $**10,000** for direct physical loss in any one occurrence.

ARTICLE 7—CONTRACTOR'S RESPONSIBILITIES

7.03 Labor; Working Hours

Copyright© 2018 National Society of Professional Engineers, American Council of Engineering Companies, and American Society of Civil Engineers. All rights reserved.
Modified to include RD edits from RUS Bulletin 1780-26 (6/16/2020).

SC-7.03 Add the following new subparagraphs immediately after Paragraph 7.03.C:

1. Regular working hours will be 7:00 AM to 6 PM, Monday through Saturday. Work on Saturdays will be permitted, notwithstanding Paragraph 7.03.C.
2. Contractor may perform Work on Sundays or legal holidays in the case of an emergency or with Owner's prior written consent, which will not be unreasonably withheld.
3. Contractor agrees to respect the quiet nature of the surrounding residential community and exercise due diligence in keeping noise to a minimum.

SC-7.03 Add the following new paragraph immediately after Paragraph 7.03.C:

D. **Contractor** shall be responsible for the cost of any overtime pay or other expense incurred by the Owner for Engineer's services (including those of the Resident Project Representative, if any), Owner's representative, and construction observation services, occasioned by the performance of Work on Saturday, Sunday, any legal holiday, or as overtime on any regular work day. If Contractor is responsible but does not pay, or if the parties are unable to agree as to the amount owed, then Owner may impose a reasonable set-off against payments due under Article 15.

SC-7.05.A.1.a.3 – Amend the last sentence of Paragraph a.3 by striking out "and;" and adding a period at the end of Paragraph a.3.

SC-7.05.A.1.a.4 – Delete paragraph in its entirety and insert "Deleted."

SC-7.06.A.3.a.2 – Remove "and" from the end of paragraph.

SC-7.06.A.3.a.3 – Add "; and" to the end of paragraph.

SC-7.07.A – Amend by adding the following to the end of the paragraph:

The total amount of work subcontracted by the Contractor shall not exceed fifty percent of the Contract price without prior approval from the Owner, Engineer and Agency.

SC-7.08.B – Delete section in its entirety and insert "Deleted."

SC-7.08.C – Delete section in its entirety and insert "Deleted."

ARTICLE 8—OTHER WORK AT THE SITE

No suggested Supplementary Conditions in this Article.

ARTICLE 9—OWNER'S RESPONSIBILITIES

9.13 Communications to Contractor

A. Except as otherwise provided in these General Conditions, Owner shall issue all communications to Contractor through Construction Manager.

B. Construction Manager will establish and implement procedures including testing, reviewing and processing requests for information, clarifications, and interpretations of the Contract Documents; show drawings, samples, and other submittals; schedule

Copyright© 2018 National Society of Professional Engineers, American Council of Engineering Companies, and American Society of Civil Engineers. All rights reserved.

adjustments; Change Order proposals; written proposals for substitutions; payment applications; and maintenance of logs.

ARTICLE 10—ENGINEER'S STATUS DURING CONSTRUCTION

10.03 Resident Project Representative

SC-10.03 Add the following new paragraphs immediately after Paragraph 10.03.B:

C. The Resident Project Representative (RPR) will be Engineer's representative at the Site. RPR's dealings in matters pertaining to the Work in general will be with Engineer and Contractor. RPR's dealings with Subcontractors will only be through or with the full knowledge or approval of Contractor. The RPR will:

1. *Conferences and Meetings:* Attend meetings with Contractor, such as preconstruction conferences, progress meetings, job conferences, and other Project-related meetings (but not including Contractor's safety meetings), and as appropriate prepare and circulate copies of minutes thereof.

2. *Safety Compliance:* Comply with Site safety programs, as they apply to RPR, and if required to do so by such safety programs, receive safety training specifically related to RPR's own personal safety while at the Site.

3. *Liaison*

   a. Serve as Engineer's liaison with Contractor. Working principally through Contractor's authorized representative or designee, assist in providing information regarding the provisions and intent of the Contract Documents.

   b. Assist Engineer in serving as Owner's liaison with Contractor when Contractor's operations affect Owner's on-Site operations.

   c. Assist in obtaining from Owner additional details or information, when required for Contractor's proper execution of the Work.

4. *Review of Work; Defective Work*

   a. Conduct on-site observations of the Work to assist Engineer in determining, to the extent set forth in Paragraph 10.02, if the Work is in general proceeding in accordance with the Contract Documents.

   b. Observe whether any Work in place appears to be defective.

   c. Observe whether any Work in place should be uncovered for observation, or requires special testing, inspection or approval.

5. *Inspections and Tests*

   a. Observe Contractor-arranged inspections required by Laws and Regulations, including but not limited to those performed by public or other agencies having jurisdiction over the Work.

   b. Accompany visiting inspectors representing public or other agencies having jurisdiction over the Work.

6. *Payment Requests:* Review Applications for Payment with Contractor.

Copyright© 2018 National Society of Professional Engineers, American Council of Engineering Companies, and American Society of Civil Engineers. All rights reserved.
Modified to include RD edits from RUS Bulletin 1780-26 (6/16/2020).

7. *Completion*

   a. Participate in Engineer's visits regarding Substantial Completion.

   b. Assist in the preparation of a punch list of items to be completed or corrected.

   c. Participate in Engineer's visit to the Site in the company of Owner and Contractor regarding completion of the Work, and prepare a final punch list of items to be completed or corrected by Contractor.

   d. Observe whether items on the final punch list have been completed or corrected.

D. The RPR will not:

1. Authorize any deviation from the Contract Documents or substitution of materials or equipment (including "or-equal" items).

2. Exceed limitations of Engineer's authority as set forth in the Contract Documents.

3. Undertake any of the responsibilities of Contractor, Subcontractors, or Suppliers.

4. Advise on, issue directions relative to, or assume control over any aspect of the means, methods, techniques, sequences or procedures of construction.

5 Advise on, issue directions regarding, or assume control over security or safety practices, precautions, and programs in connection with the activities or operations of Owner or Contractor.

6. Participate in specialized field or laboratory tests or inspections conducted off-site by others except as specifically authorized by Engineer.

7. Authorize Owner to occupy the Project in whole or in part.

ARTICLE 11—CHANGES TO THE CONTRACT

11.01.B. Add "and must be approved by the City's Governing Body" to the end of the paragraph.

ARTICLE 12—CLAIMS

No suggested Supplementary Conditions in this Article.

ARTICLE 13—COST OF WORK; ALLOWANCES, UNIT PRICE WORK

13.01 Cost of the Work

SC-13.01 Supplement Paragraph 13.01.B.5.c.(2) by adding the following sentence:

The equipment rental rate book that governs the included costs for the rental of machinery and equipment owned by Contractor (or a related entity) under the Cost of the Work provisions of this Contract is the most current edition of Equipment Rental Rate Blue Book by Equipment Watch.

Copyright© 2018 National Society of Professional Engineers, American Council of Engineering Companies, and American Society of Civil Engineers. All rights reserved.

SC-13.01 Supplement Paragraph 13.01.C.2 by adding the following definition of small tools and hand tools:

For purposes of this paragraph, "small tools and hand tools" means any tool or equipment whose current price if it were purchased new at retail would be less than $1,000.

13.03 Unit Price Work

SC-13.03 Delete Paragraph 13.03.E in its entirety and insert the following in its place:

E. Adjustments in Unit Price

1. Contractor or Owner shall be entitled to an adjustment in the unit price with respect to an item of Unit Price Work if:

a. the extended price of a particular item of Unit Price Work amounts to ten percent or more of the Contract Price (based on estimated quantities at the time of Contract formation) and the variation in the quantity of that particular item of Unit Price Work actually furnished or performed by Contractor differs by more than [number] percent from the estimated quantity of such item indicated in the Agreement; and

b. Contractor's unit costs to perform the item of Unit Price Work have changed materially and significantly as a result of the quantity change.

2. The adjustment in unit price will account for and be coordinated with any related changes in quantities of other items of Work, and in Contractor's costs to perform such other Work, such that the resulting overall change in Contract Price is equitable to Owner and Contractor.

3. Adjusted unit prices will apply to all units of that item.

ARTICLE 14—TESTS AND INSPECTIONS; CORRECTION, REMOVAL, OR ACCCEPTANCE OF DEFECTIVE WORK

No suggested Supplementary Conditions in this Article.

ARTICLE 15—PAYMENTS TO CONTRACTOR, SET OFFS; COMPLETIONS; CORRECTION PERIOD

15.01 Progress Payments

SC-15.01.D.1 – Delete paragraph in its entirety and insert the following in its place:

The Application for Payment with Engineer's recommendations will be presented to the Owner and Agency for consideration. If both the Owner and Agency find the Application for Payment acceptable, the recommended amount less any reduction under the provisions of Paragraph 15.01.E will become due thirty (30) days after the Application for

Copyright© 2018 National Society of Professional Engineers, American Council of Engineering Companies, and American Society of Civil Engineers. All rights reserved.

Payment is presented to the Owner, and the Owner will make payment to the Contractor.

SC-15.01. Add the following new paragraph after 15.01.D.1:

2. The Contractor shall disburse money paid to him, including any interest received, subcontractors' and suppliers' prorated share of the payment for undisputed services to subcontractors and suppliers within seven (7) days after Contractor receives progress payment. The Contractor may withhold a portion of any partial payment to a subcontractor or supplier as may be set forth in a subcontract agreement.

SC-15.02.A – Amend paragraph by striking out the following text: "7 days after".

15.03 Substantial Completion

SC-15.03 Add the following new subparagraph to Paragraph 15.03.B:

1. If some or all of the Work has been determined not to be at a point of Substantial Completion and will require re-inspection or re-testing by Engineer, the cost of such re-inspection or re-testing, including the cost of time, travel and living expenses, will be paid by Contractor to Owner. If Contractor does not pay, or the parties are unable to agree as to the amount owed, then Owner may impose a reasonable set-off against payments due under this Article 15.

15.05 Final Completion

SC-15.05 Add the following new subparagraph to Paragraph 15.03.B:

1. If some or all of the Work has been determined not to be at a point of Final Completion and will require re-inspection or re-testing by Engineer, the cost of such re-inspection or re-testing, including the cost of time, travel and living expenses, will be paid by Contractor to Owner. If Contractor does not pay, or the parties are unable to agree as to the amount owed, then Owner may impose a reasonable set-off against payments due under this Article 15.

ARTICLE 16—SUSPENSION OF WORK AND TERMINATION

No suggested Supplementary Conditions in this Article.

ARTICLE 17—FINAL RESOLUTIONS OF DISPUTES

17.02 Public Works Mediation

SC-17.02 Add the following new paragraph immediately after Paragraph 17.01.

17.02 *Public Works Mediation*

A. All matters subject to final resolution under this Article will be settled by Public Works Mediation pursuant to the Public Works Mediation Act, NMSA 1978, secs. 13-4C-1 through 13-4C-11.

B. An interested person may convene a mediation session for the purpose of resolving disputes related to the performance of a public works project. Mediation of a dispute related to the performance of a public works project shall take place within thirty days

Copyright© 2018 National Society of Professional Engineers, American Council of Engineering Companies, and American Society of Civil Engineers. All rights reserved.
Modified to include RD edits from RUS Bulletin 1780-26 (6/16/2020).

after an interested person has provided notice of the mediation session to other interested persons.

C. When an interested person receives notice of a mediation session, that person may notify other interested persons of the mediation session. A person who receives notice of a mediation session shall provide notice:

(1) to other interested persons no later than five days following receipt of the original notice; and

(2) that other interested persons have been notified to the interested person who convened the mediation session no later than five days following receipt of the original notice.

D. An interested person providing notice of a mediation session shall include the following information within the notice:

(1) the name and mailing address of the mediator;

(2) the date, time and location of the mediation session;

(3) a brief summary of all issues concerning a dispute related to the performance of a public works project;

(4) a brief statement regarding an interested person's association to a dispute related to the performance of a public works project, when the interested person has been provided with notice of a mediation session; and

(5) the cost for an eight-hour mediation session and the responsibility for payment of the costs pursuant to the provisions of Section 13-4C-11 NMSA 1978.

E. Service of the notice required pursuant to the provisions of Subsection B of this section shall be made by:

(1) mailing a certified letter, return receipt requested, to an interested person's residence, principal office or place of business; or

(2) delivering a copy of the notice to interested persons.

F. Each interested person properly notified of a mediation session shall prepare a summary of his position relative to issues concerning a dispute related to the performance of a public works project. The summary shall not exceed four pages in length. The summary shall be provided to the mediator at least four days prior to the mediation session. A mediator may request additional information or materials from persons properly notified of the mediation session.

G. All interested persons or representatives of interested persons properly notified of a mediation session shall attend the session for a minimum of eight hours unless otherwise agreed to by all persons attending the session. An interested person or a representative of an interested person attending a mediation session shall have the authority to enter into a settlement of disputes related to the performance of a public works project. A person may be accompanied by an attorney during the mediation session.

H. Following the completion of a mediation session, the mediator shall record any agreements entered into by persons during the session. Agreements shall be recorded

Copyright© 2018 National Society of Professional Engineers, American Council of Engineering Companies, and American Society of Civil Engineers. All rights reserved.

in writing or by an audio or video tape recording; provided that all persons entering into the agreement shall indicate their assent to the agreement.

Evidence of offers to compromise a dispute or disclosures made during a mediation session shall not be admissible in subsequent judicial proceedings.

I. The costs of a mediation session shall be borne equally by all interested persons properly notified of a mediation session. When an interested person who has been properly notified of a mediation session fails to appear for that session or fails to remain for the duration of a session, that interested person shall be wholly responsible for the costs of the mediation session.

When a person files a lawsuit subsequent to exhausting the procedures set forth in the Public Works Mediation Act, the court may assess costs against any interested person who was properly notified of a mediation session and who failed to pay his share of the costs of the mediation session.

The mediator shall determine whether a person is an interested person for the purpose of sharing the costs of a mediation session.

ARTICLE 18— MISCELLANEOUS

Add the following new paragraph immediately after Paragraph 18.10.

18.11 Gratuities

A. If Owner finds after a notice and hearing that Contractor, or any of Contractor's agents or representatives, offered or gave gratuities (in the form of entertainment, gifts, or otherwise) to any official, employee, or agent of Owner or Agency in an attempt to secure this Contract or favorable treatment in awarding, amending, or making any determinations related to the performance of this Contract, Owner may, by written notice to Contractor, terminate this Contract. Owner may also pursue other rights and remedies that the law or this Contract provides. However, the existence of the facts on which Owner bases such findings shall be an issue and may be reviewed in proceedings under the dispute resolution provisions of this Contract.

B. In the event this Contract is terminated as provided in paragraph 19.04.A, Owner may pursue the same remedies against Contractor as it could pursue in the event of a breach of this Contract by Contractor. As a penalty, in addition to any other damages to which it may be entitled by law, Owner may pursue exemplary damages in an amount (as determined by Owner) which shall not be less than three nor more than ten times the costs Contractor incurs in providing any such gratuities to any such officer or employee.

18.12 Environmental Requirements

A. When constructing a Project involving trenching and/or other related earth excavations, Contractor shall comply with the following environmental conditions:

1. Wetlands – When disposing of excess, spoil, or other Construction Materials on public or private property, Contractor shall not fill in or otherwise convert wetlands.

Copyright© 2018 National Society of Professional Engineers, American Council of Engineering Companies, and American Society of Civil Engineers. All rights reserved.

2. Floodplains – When disposing of excess, spoil, or other Construction Materials on public or private property, Contractor shall not fill in or otherwise convert 100-year floodplain areas (Standard Flood Hazard Area) delineated on the latest Federal Emergency Management Agency Floodplain Maps, or other appropriate maps, e.g., alluvial soils on NRCS Soil Survey Maps.

3. Historic Preservation - Applicants shall ensure that Contractors maintain a copy of the following inadvertent discovery plan onsite for review:

    a. If during the course of any ground disturbance related to any Project, any post review discovery, including but not limited to, any artifacts, foundations, or other indications of past human occupation of the area are uncovered, shall be protected by complying with 36 CFR § 800.13(b)(3) and (c) and shall include the following:

        i. All Work, including vehicular traffic, shall immediately stop within a 50 ft. radius around the area of discovery. The Contractor shall ensure barriers are established to protect the area of discovery and notify the Engineer to contact the appropriate RD personnel. The Engineer shall engage a Secretary of the Interior (SOI) qualified professional archeologist to quickly assess the nature and scope of the discovery; implement interim measures to protect the discovery from looting and vandalism; and establish broader barriers if further historic and/or precontact properties, can reasonably be expected to occur.

        ii. The RD personnel shall notify the appropriate RD environmental staff member, the Federal Preservation Officer (FPO), and State Historic Preservation Office (SHPO) immediately. Indian tribe(s) or Native Hawaiian Organization (NHOs) that have an interest in the area of discovery shall be contacted immediately. The SHPO may require additional tribes or NHOs who may have an interest in the area of discovery also be contacted. The notification shall include an assessment of the discovery provided by the SOI qualified professional archeologist.

        iii. When the discovery contains burial sites or human remains, the Contractor shall immediately notify the appropriate RD personnel who will contact the RD environmental staff member, FPO, and the SHPO. The relevant law enforcement authorities shall be immediately contacted by onsite personnel to reduce delay times, in accordance with tribal, state, or local laws including 36 CFR Part 800.13; 43 CFR Part 10, Subpart B; and the Advisory Council on Historic Preservation's Policy Statement Regarding treatment of Burial Sites, Human Remains, or Funerary Objects (February 23, 2007).

Copyright© 2018 National Society of Professional Engineers, American Council of Engineering Companies, and American Society of Civil Engineers. All rights reserved.

iv. When the discovery contains burial sites or human remains, all construction activities, including vehicular traffic shall stop within a 100 ft. radius of the discovery and barriers shall be established. The evaluation of human remains shall be conducted at the site of discovery by a SOI qualified professional. Remains that have been removed from their primary context and where that context may be in question may be retained in a secure location, pending further decisions on treatment and disposition. RD may expand this radius based on the SOI professional's assessment of the discovery and establish broader barriers if further subsurface burial sites, or human remains can reasonably be expected to occur. RD, in consultation with the SHPO and interested tribes or NHOs, shall develop a plan for the treatment of native human remains.

v. Work may continue in other areas of the undertaking where no historic properties, burial sites, or human remains are present. If the inadvertent discovery appears to be a consequence of illegal activity such as looting, the onsite personnel shall contact the appropriate legal authorities immediately if the landowner has not already done so.

vi. Work may not resume in the area of the discovery until a notice to proceed has been issued by RD. RD shall not issue the notice to proceed until it has determined that the appropriate local protocols and consulting parties have been consulted.

vii. Inadvertent discoveries on federal and tribal land shall follow the processes required by the federal or tribal entity.

4. Endangered Species – Contractor shall comply with the Endangered Species Act, which provides for the protection of endangered and/or threatened species and critical habitat. Should any evidence of the presence of endangered and/or threatened species or their critical habitat be brought to the attention of Contractor, Contractor will immediately report this evidence to Owner and a representative of Agency. Construction shall be temporarily halted pending the notification process and further directions issued by Agency after consultation with the U.S. Fish and Wildlife Service.

Copyright© 2018 National Society of Professional Engineers, American Council of Engineering Companies, and American Society of Civil Engineers. All rights reserved.

Item	Electronic Documents	Transmittal Means	Data Format	Note (1)
a.1	General communications, transmittal covers, meeting notices and responses to general information requests for which there is no specific prescribed form.	Email	Email	
a.2	Meeting agendas, meeting minutes, RFI's and responses to RFI's, and Contract forms.	Email w/ Attachment	PDF	(2)
a.3	Contactors Submittals (Shop Drawings, "or equal" requests, substitution requests, documentation accompanying Sample submittals and other submittals) to Owner and Engineer, and Owner's and Engineer's responses to Contractor's Submittals, Shop Drawings, correspondence, and Applications for Payment.	Email w/ Attachment	PDF	
a.4	Correspondence; milestone and final version Submittals of reports, layouts, Drawings, maps, calculations and spreadsheets, Specifications, Drawings and other Submittals from Contractor to Owner or Engineer and for responses from Engineer and Owner to Contractor regarding Submittals.	Email w/ Attachment or LFE	PDF	
a.5	Layouts and drawings to be submitted to Owner for future use and modification.	Email w/ Attachment or LFE	DWG	
a.6	Correspondence, reports and Specifications to be submitted to Owner for future word processing use and modification.	Email w/ Attachment or LFE	DOC	
a.7	Spreadsheets and data to be submitted to Owner for future data processing use and modification.	Email w/ Attachment or LFE	EXC	
a.8	Database files and data to be submitted to Owner for future data processing use and modification.	Email w/ Attachment or LFE	DB	

Notes	
(1)	All exchanges and uses of transmitted data are subject to the appropriate provisions of Contract Documents.
(2)	Transmittal of written notices is governed by Paragraph 18.01 of the General Conditions.

Key	
Email	Standard Email formats (.htm, .rtf, or .txt). Do not use stationery formatting or other features that impair legibility of content on screen or in printed copies
LFE	Agreed upon Large File Exchange method (FTP, CD, DVD, hard drive)
PDF	Portable Document Format readable by Adobe® Acrobat Reader Version **[number]** or later
DWG	Autodesk® AutoCAD .dwg format Version **[number]**
DOC	Microsoft® Word .docx format Version **[number]**
EXC	Microsoft® Excel .xls or .xml format Version **[number]**
DB	Microsoft® Access .mdb format Version **[number]**

AIA® Document A312™ – 2010

Performance Bond

CONTRACTOR:
(Name, legal status and address)

SURETY:
(Name, legal status and principal place of business)

This document has important legal consequences. Consultation with an attorney is encouraged with respect to its completion or modification.

Any singular reference to Contractor, Surety, Owner or other party shall be considered plural where applicable.

OWNER:
(Name, legal status and address)

CONSTRUCTION CONTRACT
Date:

Amount:

Description:
(Name and location)

BOND
Date:
(Not earlier than Construction Contract Date)

Amount:

Modifications to this Bond: ☐ None ☐ See Section 16

CONTRACTOR AS PRINCIPAL		**SURETY**	
Company:	*(Corporate Seal)*	Company:	*(Corporate Seal)*
Signature:		Signature:	
Name and Title:		Name and Title:	

(Any additional signatures appear on the last page of this Performance Bond.)

(FOR INFORMATION ONLY — Name, address and telephone)

AGENT or **BROKER:**

OWNER'S REPRESENTATIVE:
(Architect, Engineer or other party:)

Sample

AIA Document A312™ – 2010 Performance Bond. The American Institute of Architects. **All rights reserved. WARNING: This AIA® Document is protected by U.S. Copyright Law and International Treaties. Unauthorized reproduction or distribution of this AIA® Document, or any portion of it, may result in severe civil and criminal penalties, and will be prosecuted to the maximum extent possible under the law.** To report copyright violations of AIA Contract Documents, e-mail The American Institute of Architects' legal counsel, copyright@aia.org.

AIA® Document A312™ – 2010

Payment Bond

CONTRACTOR:
(Name, legal status and address)

SURETY:
(Name, legal status and principal place of business)

This document has important legal consequences. Consultation with an attorney is encouraged with respect to its completion or modification.

Any singular reference to Contractor, Surety, Owner or other party shall be considered plural where applicable.

OWNER:
(Name, legal status and address)

CONSTRUCTION CONTRACT
Date:

Amount:

Description:
(Name and location)

BOND
Date:
(Not earlier than Construction Contract Date)

Amount:

Modifications to this Bond: ☐ None ☐ See Section 18

CONTRACTOR AS PRINCIPAL		**SURETY**	
Company:	*(Corporate Seal)*	Company:	*(Corporate Seal)*
Signature:		Signature:	
Name and Title:		Name and Title:	

(Any additional signatures appear on the last page of this Payment Bond.)

(FOR INFORMATION ONLY — Name, address and telephone)

AGENT or **BROKER:**

OWNER'S REPRESENTATIVE:
(Architect, Engineer or other party:)

Sample

AIA Document A312™ – 2010 Payment Bond. The American Institute of Architects. **All rights reserved. WARNING: This AIA® Document is protected by U.S. Copyright Law and International Treaties. Unauthorized reproduction or distribution of this AIA® Document, or any portion of it, may result in severe civil and criminal penalties, and will be prosecuted to the maximum extent possible under the law.** To report copyright violations of AIA Contract Documents, e-mail The American Institute of Architects' legal counsel, copyright@aia.org.

CERTIFICATE OF LIABILITY INSURANCE

DATE (MM/DD/YYYY)

THIS CERTIFICATE IS ISSUED AS A MATTER OF INFORMATION ONLY AND CONFERS NO RIGHTS UPON THE CERTIFICATE HOLDER. THIS CERTIFICATE DOES NOT AFFIRMATIVELY OR NEGATIVELY AMEND, EXTEND OR ALTER THE COVERAGE AFFORDED BY THE POLICIES BELOW. THIS CERTIFICATE OF INSURANCE DOES NOT CONSTITUTE A CONTRACT BETWEEN THE ISSUING INSURER(S), AUTHORIZED REPRESENTATIVE OR PRODUCER, AND THE CERTIFICATE HOLDER.

IMPORTANT: If the certificate holder is an ADDITIONAL INSURED, the policy(ies) must be endorsed. If SUBROGATION IS WAIVED, subject to the terms and conditions of the policy, certain policies may require an endorsement. A statement on this certificate does not confer rights to the certificate holder in lieu of such endorsement(s).

PRODUCER	CONTACT NAME:
	PHONE (A/C, No, Ext): / FAX (A/C, No):
	E-MAIL ADDRESS:

INSURED	INSURER(S) AFFORDING COVERAGE	NAIC #
	INSURER A :	
	INSURER B :	
	INSURER C :	
	INSURER D :	
	INSURER E :	
	INSURER F :	

COVERAGES **CERTIFICATE NUMBER:** **REVISION NUMBER:**

THIS IS TO CERTIFY THAT THE POLICIES OF INSURANCE LISTED BELOW HAVE BEEN ISSUED TO THE INSURED NAMED ABOVE FOR THE POLICY PERIOD INDICATED. NOTWITHSTANDING ANY REQUIREMENT, TERM OR CONDITION OF ANY CONTRACT OR OTHER DOCUMENT WITH RESPECT TO WHICH THIS CERTIFICATE MAY BE ISSUED OR MAY PERTAIN, THE INSURANCE AFFORDED BY THE POLICIES DESCRIBED HEREIN IS SUBJECT TO ALL THE TERMS, EXCLUSIONS AND CONDITIONS OF SUCH POLICIES. LIMITS SHOWN MAY HAVE BEEN REDUCED BY PAID CLAIMS.

INSR LTR	TYPE OF INSURANCE	ADDL INSR	SUBR WVD	POLICY NUMBER	POLICY EFF (MM/DD/YYYY)	POLICY EXP (MM/DD/YYYY)	LIMITS	
	GENERAL LIABILITY						EACH OCCURRENCE	$
	COMMERCIAL GENERAL LIABILITY						DAMAGE TO RENTED PREMISES (Ea occurrence)	$
	CLAIMS-MADE OCCUR						MED EXP (Any one person)	$
							PERSONAL & ADV INJURY	$
							GENERAL AGGREGATE	$
	GEN'L AGGREGATE LIMIT APPLIES PER:						PRODUCTS - COMP/OP AGG	$
	POLICY PRO-JECT LOC							$
	AUTOMOBILE LIABILITY						COMBINED SINGLE LIMIT (Ea accident)	$
	ANY AUTO						BODILY INJURY (Per person)	$
	ALL OWNED AUTOS / SCHEDULED AUTOS						BODILY INJURY (Per accident)	$
	HIRED AUTOS / NON-OWNED AUTOS						PROPERTY DAMAGE (Per accident)	$
								$
	UMBRELLA LIAB OCCUR						EACH OCCURRENCE	$
	EXCESS LIAB CLAIMS-MADE						AGGREGATE	$
	DED RETENTION $							$
	WORKERS COMPENSATION AND EMPLOYERS' LIABILITY Y / N						WC STATU-TORY LIMITS / OTH-ER	
	ANY PROPRIETOR/PARTNER/EXECUTIVE OFFICER/MEMBER EXCLUDED? (Mandatory in NH) N / A						E.L. EACH ACCIDENT	$
	If yes, describe under DESCRIPTION OF OPERATIONS below						E.L. DISEASE - EA EMPLOYEE	$
							E.L. DISEASE - POLICY LIMIT	$

DESCRIPTION OF OPERATIONS / LOCATIONS / VEHICLES (Attach ACORD 101, Additional Remarks Schedule, if more space is required)

CERTIFICATE HOLDER	CANCELLATION
	SHOULD ANY OF THE ABOVE DESCRIBED POLICIES BE CANCELLED BEFORE THE EXPIRATION DATE THEREOF, NOTICE WILL BE DELIVERED IN ACCORDANCE WITH THE POLICY PROVISIONS.
	AUTHORIZED REPRESENTATIVE

ACORD 25 (2010/05)

© 1988-2010 ACORD CORPORATION. All rights reserved.

The ACORD name and logo are registered marks of ACORD

AFFIDAVIT OF WAGES PAID

To Be Completed After Construction Is Complete
All FIELDS ARE REQUIRED
FORM MUST BE SENT TO THE CONTRACTING AGENCY

General Contractor Information		
Company Name:		
Address:		
City:	State:	Zip:
Phone:	Fax:	E-Mail:
Estimated Completion Date:	**State Wage Decision Number:**	
Project Title:	Project Physical Address:	
Print Name:	General Contractor Signature:	
Sub Contractor Information	Date you completed work on this project:	
Company Name:		
Address:		
City:	State:	Zip:
Phone:	Fax:	E-Mail:
Print Name:	Sub Contractor Signature:	
2nd, 3rd, etc. Tier Sub Contractor Information	Date you completed work on this project:	
Company Name:		
Address:		
City:	State:	Zip:
Phone:	Fax:	E-Mail:
Print Name:	Tier Signature:	

I hereby certify that the above information is correct and that all workers I employ on this public works project were paid no less than the Prevailing Wage Rate(s) as determined by the Department of Workforce Solutions, Labor Relations Division for this project as identified by the State Wage Decision Number. I understand that contractors who violate Prevailing Wage Laws (i.e., incorrect job classification, improper payment of prevailing wages, and/or overtime, etc.), are subject to debarment procedures and shall be required to pay any back wages due to workers. (Ref. Labor Relations Division Public Works Minimum Wage Act Policy Manual (11.1.2 NMAC) & Public Works Minimum Wage Act (13-4-11 through 13-4-18, NMSA 78)).

_____ _____
Contractor's Signature Date

(Revised 08/23/13)

INSTRUCTIONS FOR COMPLETING AFFIDAVIT OF WAGES PAID

GENERAL CONTRACTOR

1. Enter general contractor information and provide signature.
2. Enter State Wage Decision Number as listed in bid documents. (Example: BE 13-0123 B)
3. Enter project title - listed in bid documents.
4. Enter project physical address - exact location of project (job site).
5. Enter completion date of project.
6. All Affidavits' must be sent to the Contracting Agency.

SUB CONTRACTOR

1. Enter general contractor information, but general contractor signature is not needed.
2. Enter sub contractor information as indicated and provide signature.
3. Enter sub contractor completion date.

NOTE: A separate signed form is needed for each contractor.

2ND, 3rd, etc. TIER SUB CONTRACTOR

1. Enter sub contractor information, subcontractor signature is not needed.
2. Enter 2nd tier sub contractor information and provide signature.
3. Enter 2nd tier contract completion date.

(Revised 8/23/13)

STATEMENT OF INTENT TO PAY PREVAILING WAGES

To Be Completed Before Construction Starts
All FIELDS ARE REQUIRED
FORM MUST BE SENT TO THE CONTRACTING AGENCY WITHIN 3 DAY OF THE AWARD

General Contractor Information		
3.1.1. Company Name:		
3.1.2. Address:		
3.1.3. City:	State:	Zip:
3.1.4. Phone:	Fax:	E-Mail:
3.1.5. FEIN #		
3.1.6. Estimated Start Date**:**	3.1.7. **State Wage Decision Number:**	
3.1.8. 3.1.9. Project Title:	3.1.10. 3.1.11. Project Physical Address:	
3.1.12. **Total Contract Amount:**	3.1.13. Estimated Completion Date:	
3.1.14. 3.1.15. Print Name:	3.1.16. **3.1.17.** General Contractor Signature**:**	
3.1.18.		
3.1.19. **Sub-Contractor Information**	Subcontract Amount:	Start date on this project:
3.1.20. Company Name:		
3.1.21. Address:		
3.1.22. City:	State:	Zip:
3.1.23. Phone:	Fax:	E-Mail:
3.1.24. FEIN #		
3.1.25. 3.1.26. Print Name:	3.1.27. 3.1.28. Sub-Contractor Signature:	
3.1.29.		
3.1.30. 2nd, 3rd, etc. Tier Sub-Contractor Information 3.1.31.	Contract Amount:	**3.1.32.** Start date on this project**:**
3.1.33. Company Name:		
3.1.34. Address:		
3.1.35. City:	State:	Zip:
3.1.36. Phone:	Fax:	E-Mail:
3.1.37. FEIN#		
3.1.38. 3.1.39. Print Name:	3.1.40. 3.1.41. Tier Signature:	

I hereby certify that the above information is correct and that all workers I employ on this public works project will be paid no less than the Prevailing Wage Rate(s) as determined by the Department of Workforce Solutions, Labor Relations Division for this project as identified by the State Wage Decision Number. I understand that contractors who violate Prevailing Wage Laws (i.e., incorrect job classification, improper payment of prevailing wages, and/or overtime, etc.), are subject to debarment procedures and shall be required to pay any back wages due to workers. (Ref. Labor Relations Division, Public Works Minimum Wage Act Policy Manual (11.1.2 NMAC) & Public Works Minimum Wage Act (13-4-11 through 13-4-18, NMSA 1978).

_____ _____
Contractor's Signature Date

GENERAL CONTRACTOR

1. Enter general contractor information and provide signature.
2. Enter State Wage Decision Number as listed in bid documents. (Example: BE-13-0123 B)
3. Enter project title - listed in bid documents.
4. Enter project physical address - exact location of project (job site).
5. Enter estimated start & completion dates of project.
6. Enter general contractor's contract amount.
7. All Statements must be sent to the Contracting Agency.

SUB CONTRACTOR

1. Enter general contractor information, but general contractor signature is not needed.
2. Enter sub-contractor information as indicated and provide signature.
3. Enter sub-contractor contract amount.

NOTE: A separate signed form is needed for each contractor.

2ND TIER SUB CONTRACTOR

1. Enter general contractor information, but general contractor signature is not needed.
2. Enter sub-contractor information; subcontractor signature not needed.
3. Enter 2nd tier sub information and provide signature.
4. Enter 2nd tier contractors contract amount.

3RD TIER AND HIGHER CONTRACTOR

1. Attach a copy of this completed form & list the 3rd tier contractor information under the 2nd tier

Payroll Statement of Compliance

Wage Decision No.: _____

I, _____,
do hereby state:
(Name of Signatory Party) (Title)

(1) that I pay or supervise the payment of the persons employed by: -
_____
(Contractor or Subcontractor)
on the _____
(Name of Project)
that during the payroll period commencing on the _____day of_____, 20
and ending the
_____day of _____, 20___, all persons employed on said project have been paid the full weekly
wages earned, that no deductions have been or will be made either directly or indirectly to or on behalf of said
_____ from the full
weekly wages earned by any (Contractor or Subcontractor)
person, other than deductions permitted by law. Anyone found in violation of the NM Public Works Minimum Wage Act [13-4-11 to 13-4-17 NMSA 1978] could be subject to penalties and debarment.

(2) That any payrolls otherwise under this contract required to be submitted for the above period are correct and complete; that the wage rates for laborer or mechanic conform with the work he performed.

(3) That any apprentice(s) employed in the above period are duly registered in a bona fide apprenticeship program registered with the State Apprenticeship agency recognized by the Bureau of Apprenticeship & Training., US Dept.
of Labor, or properly enrolled in a bona fide training program approved for application on public works construction projects by the appropriate state (SAC) and/or federal agency(ies) (BAT) if and as required by law & applicable federal regulation.

(4) **FRINGE BENEFITS:** ***(Please Spell Out Any/All Acronyms)***

___(a) ARE PAID TO APPROVED PLAN, FUND, OR PROGRAM in addition to the basic hourly wage rates paid to each laborer or mechanic listed in the above-referenced payroll, payments of fringe benefits as
listed in the contract have been or will be made to appropriate program for the benefit of such employees.

If paid to an approved plan, fund, or program, please fill out name of program w/fringe breakdown per hour below:

Name of Program Used for Fringe Benefits:				
Pension =	**Health/Welfare =**	**Holiday/Vac. =**	**Life Ins. =**	**Training* =**
(If additional space is needed for more programs/fringe breakdowns, please attach a separate page.)				

FRINGE BENEFITS :
Pension
Health/Welfare
Holiday/Vacation
Life Insurance
Training (not Apprenticeship) *******

FRINGE BREAKDOWN SAMPLE:

Fringe Benefit:	Amount:
401(K) Plan	$8.98/hr.
Vacation	$2.23/hr.

___(b) **Paid to Union Program** - If paid to a Union and fringe benefits differ from employee to employee, and/ or job contract, please provide fringe breakdown for each employee and attach copy of Union contract.

___(c) ARE PAID IN CASH, each laborer or mechanic listed in the above-referenced payroll has been paid as indicated on the payroll, an amount not less than the sum of the applicable basic hourly wage rate plus the amount of the required fringe benefits as listed in the contract.

Section 13-1D-1 to Section 13-1D-8, NMSA 1978 provides for employers to agree to make contributions to
approved apprentice & training programs in New Mexico in which the employer is a participant to the public works apprentice and training fund administered by the Public Works Bureau of the Labor & Industrial Division
of the New Mexico State Department of Labor. Contributions shall be made in the same manner and in the same amount as apprentice and training contributions required pursuant to wage rate determinations made by the Labor & Industrial Division Director.

APPRENTICESHIP CONTRIBUTIONS: (Please check applicable blank)

___Check paid to: NM Public Works Apprenticeship & Training Fund - Public Works Bureau, Labor & Industrial Div.

___Check paid to: _____ _____

(Name & address of approved Apprenticeship & Training Program) (Program No.)

Print Name of Certifying Official: Signature of Certifying Official: Title & Phone No.: Date:

The willful falsification of any of the above statements may subject the contractor or subcontractor to civil or criminal prosecution. See Section 1001 of Title 18 and Section 231 of Title 31 of the United States Code.

Revised April/2006

City of Santa Fe
Official Notice of Award

***** Month Day, Year

***** Mr./Mrs./Ms. Name of Contract
***** SignatoryContractor Address
***** City, State, ZIP
***** Telephone

CIP Project Number 39115
Project: Canyon Road Water Treatment Plant Flocculation and Sedimentation Improvements

Dear ***** Mr./Mrs./Ms. Contract Signatory,

This letter shall serve as Notice of Award for the scope of services authorized under the pending Contract Between City and ***** for the above referenced project. Once fully executed by theCity of Santa Fe and recorded, a copy of the contract will be sent to you via e-mail along with a PurchaseOrder.

The City of Santa Fe Governing Body, at their meeting of *****, approved the Contract with***** in the amount of ***** dollars and ***** cents ($*****), inclusive of New Mexico Gross Receipts Tax, for the above referenced project.

The "Contract" sum is determined as follows:

Base Bid:	$*****
Alternates:	$*****
Allowances:	
Surety:	$*****
NMGRT:	$*****
Contract Amount:	$*****

Please submit the following required documents and information within ten (10) days of the receipt of thisnotice:

The required Bonds including:

Sealed original "Performance Bond" equal to one hundred percent (100%) of the"Contract" amount.

Sealed original "Labor and Materials Bond" or "Payment Bond" equal to one-hundred percent (100%) of the "Contract" amount.

A signed list of the proprietary names and the suppliers of principal items or systems ofmaterials and equipment proposed for the work.

A list signed by all Subcontractors proposed for the principal portions of the work. (SeeNMDWS requirements.)

Completed NMDWS Statement of Intent to Pay Prevailing Wages form(s) (within 10 days after receiving the NMDWS Notice of Award).

Comprehensive Project Schedule based on the TBD calendar day Substantial Completion deadline. This Schedule will subject to review and modification by the City dependent upon the contract administrative approvals and recording timeline and the Purchase Order approvaltimeline after City Council approval.

A list and justifications for any items that cannot be provided within the "Contract" time. Ifaccepted by the City, these items will not be required to achieve substantial completion,but must be completed within an extended deadline established by the Contractor at this time.

Failure to comply with these conditions within the specified time will entitle the City to consider the Contract abandoned, and to annul this "Notice of Award".

A Purchase Order will be issued to you with the Official Notice-to-Proceed to follow as soon as possible.Please reference this PO number on future correspondence and invoices.

Congratulations! We look forward to working with your company on this essential project!

***** Project Administrator Name
City of Santa Fe, Deptartment
(505) 955- *****
***** email

xc: Public Utilities Department
DirectorWater Division Director
Chief Procurement Officer
TBD Project Sponsor Department Directors
TBD Stakeholders

SAMPLE

City of Santa Fe

OFFICIAL NOTICE-TO-PROCEED

***** Mr./Mrs./Ms. Name of Contract
***** SignatoryContractor Address
***** City, State ZIP
***** Telephone

CIP Project Number 39115
Project: Canyon Road Water Treatment Plant
Flocculation and Sedimentation Improvements

Dear ***** Mr./Mrs./Ms. Name of Contract Signatory,

On ***** the City Council approved the scope of services authorized under the Contract between City and ***** for the above referenced project. This letter shall serve as official Notice-to-Proceed with the scopeof services described in the contract. The contract sum of ***** dollars and ***** cents ($*****) inclusive of New Mexico Gross Receipts Tax is based on the Contractor's Bid dated *****. A purchase order in that amount is attached along with the recorded contract.

Based on the date of issuance of this Notice, the services start date of *****, and the (*****) calendar day time limit, the entire work under this Contract shall be Substantially Completed by *****, after which time liquidated damages as outlined in the contract will apply, unless time extensions are approved by change order.

Please acknowledge receipt of this notice on the next page and return a signed copy to the City of SantaFe, Dept, 801 W. San Mateo Rd, Santa Fe, NM 87505, Attention: Project Administrator Name or e-mail to TBD@santafenm.gov.

We look forward to working with your company on this vital project!

Sincerely,

_____ _____

Project Administrator Facilities Division Director

SAMPLE

Attachments: ***** Recorded ABOC,

Purchase Order Receipt Acknowledged:

_____

_____

SAMPLE

xc: Public Utilities
Department Director
Water Division
Chief Procurement Officer
TBD Project Sponsor
Department Directors TBD
Stakeholders
Project/Book file

URGENT_Purchasing_Memo_FlocSed

Final Audit Report 2025-08-18

Created:	2025-08-13
By:	Kristy Miera (kamiera@santafenm.gov)
Status:	Signed
Transaction ID:	CBJCHBCAABAAL2nfRzHU59rSI904pszMZejbeXGIjgBR

"URGENT_Purchasing_Memo_FlocSed" History

Document created by Kristy Miera (kamiera@santafenm.gov)
2025-08-13 - 5:00:16 PM GMT- IP address: 63.232.20.2

Document emailed to jmmontoya@santafenm.gov for signature
2025-08-13 - 5:14:17 PM GMT

Restricted visibility Email viewed by jmmontoya@santafenm.gov
2025-08-13 - 7:22:39 PM GMT- IP address: 104.47.64.254

Signer jmmontoya@santafenm.gov entered name at signing as Jonathan Montoya
2025-08-13 - 7:22:53 PM GMT- IP address: 63.232.20.2

Restricted visibility Document e-signed by Jonathan Montoya (jmmontoya@santafenm.gov)
Signature Date: 2025-08-13 - 7:22:55 PM GMT - Time Source: server- IP address: 63.232.20.2

Document emailed to Timothy Farrell (tgfarrell@santafenm.gov) for signature
2025-08-13 - 7:23:00 PM GMT

Email viewed by Timothy Farrell (tgfarrell@santafenm.gov)
2025-08-13 - 9:02:58 PM GMT- IP address: 174.244.16.134

Document e-signed by Timothy Farrell (tgfarrell@santafenm.gov)
Signature Date: 2025-08-13 - 9:20:44 PM GMT - Time Source: server- IP address: 174.244.16.134

Document sent to ALEXIS LOTERO (aclotero@santafenm.gov) and ajhopkins@santafenm.gov ajhopkins@santafenm.gov (ajhopkins@santafenm.gov) for signature. One of them to sign
2025-08-13 - 9:20:49 PM GMT

Email viewed by ajhopkins@santafenm.gov ajhopkins@santafenm.gov (ajhopkins@santafenm.gov)
2025-08-13 - 9:22:05 PM GMT- IP address: 104.47.64.254

Document e-signed by ajhopkins@santafenm.gov ajhopkins@santafenm.gov (ajhopkins@santafenm.gov)
Signature Date: 2025-08-13 - 9:22:56 PM GMT - Time Source: server- IP address: 63.232.20.2

Powered by Adobe Acrobat Sign

Document emailed to ralovatosanouvong@santafenm.gov for signature
2025-08-13 - 9:23:01 PM GMT

Restricted visibility Email viewed by ralovatosanouvong@santafenm.gov
2025-08-13 - 9:24:39 PM GMT- IP address: 104.47.64.254

Signer ralovatosanouvong@santafenm.gov entered name at signing as Rebecca Lovato-Sanouvong
2025-08-13 - 9:25:11 PM GMT- IP address: 63.232.20.2

Restricted visibility Document e-signed by Rebecca Lovato-Sanouvong (ralovatosanouvong@santafenm.gov)
Signature Date: 2025-08-13 - 9:25:13 PM GMT - Time Source: server- IP address: 63.232.20.2

Document sent to JoAnn Lovato (jdlovato@santafenm.gov) and Travis Dutton-Leyda (tkduttonleyda@santafenm.gov) for signature. One of them to sign
2025-08-13 - 9:25:18 PM GMT

Email viewed by Travis Dutton-Leyda (tkduttonleyda@santafenm.gov)
2025-08-14 - 4:12:00 AM GMT- IP address: 104.28.110.92

Document e-signed by Travis Dutton-Leyda (tkduttonleyda@santafenm.gov)
Signature Date: 2025-08-14 - 9:27:15 PM GMT - Time Source: server- IP address: 98.97.118.220

Document emailed to EMILY OSTER (ekoster@santafenm.gov) for signature
2025-08-14 - 9:27:22 PM GMT

Email viewed by EMILY OSTER (ekoster@santafenm.gov)
2025-08-18 - 7:29:20 PM GMT- IP address: 104.47.65.254

Document e-signed by EMILY OSTER (ekoster@santafenm.gov)
Signature Date: 2025-08-18 - 7:37:45 PM GMT - Time Source: server- IP address: 63.232.20.2

Agreement completed.
2025-08-18 - 7:37:45 PM GMT

Signature: 

Email: xivigil@santafenm.gov

Signature: Clinton Peterson

Email: cdpeterson@santafenm.gov

Signature: JONATHAN MONTOYA
JONATHAN MONTOYA (Dec 17, 2025 08:48:49 MST)

Email: jmmontoya@santafenm.gov

Signature:

Email: jdroach@santafenm.gov

Flocc_Sed_Amendment_1_MEMO

Final Audit Report 2025-12-17

Created:	2025-12-16
By:	Amanda Britt (apbritt@santafenm.gov)
Status:	Signed
Transaction ID:	CBJCHBCAABAAFZIBchDtt_AMUdqDVA7oPmvuHaCAXsAA

"Flocc_Sed_Amendment_1_MEMO" History

Document created by Amanda Britt (apbritt@santafenm.gov)
2025-12-16 - 8:35:57 PM GMT- IP address: 63.232.20.2

Document emailed to Clinton Peterson (cdpeterson@santafenm.gov) for signature
2025-12-16 - 8:42:15 PM GMT

Restricted visibility Email viewed by Clinton Peterson (cdpeterson@santafenm.gov)
2025-12-16 - 9:39:15 PM GMT- IP address: 63.232.20.2

Restricted visibility Document e-signed by Clinton Peterson (cdpeterson@santafenm.gov)
Signature Date: 2025-12-16 - 9:45:24 PM GMT - Time Source: server- IP address: 63.232.20.2

Document emailed to JONATHAN MONTOYA (jmmontoya@santafenm.gov) for signature
2025-12-16 - 9:45:29 PM GMT

Email viewed by JONATHAN MONTOYA (jmmontoya@santafenm.gov)
2025-12-17 - 3:48:14 PM GMT- IP address: 104.47.64.254

Document e-signed by JONATHAN MONTOYA (jmmontoya@santafenm.gov)
Signature Date: 2025-12-17 - 3:48:49 PM GMT - Time Source: server- IP address: 63.232.20.2

Document emailed to Jesse Roach (jdroach@santafenm.gov) for signature
2025-12-17 - 3:48:53 PM GMT

Email viewed by Jesse Roach (jdroach@santafenm.gov)
2025-12-17 - 5:10:12 PM GMT- IP address: 24.120.55.5

Document e-signed by Jesse Roach (jdroach@santafenm.gov)
Signature Date: 2025-12-17 - 5:11:17 PM GMT - Time Source: server- IP address: 24.120.55.5

Agreement completed.
2025-12-17 - 5:11:17 PM GMT

Powered by Adobe Acrobat Sign

Flocc_Sed_Amendment_1_MEMO_(1)

Interim Agreement Report 2026-01-05

Created:	2025-12-19
By:	RACHEL GABALDON (rdgabaldon@santafenm.gov)
Status:	Out for Signature
Transaction ID:	CBJCHBCAABAArPDhatLl5pCPuOrFmRz6Ze6N_XpdwSMO

Agreement History

Agreement history is the list of the events that have impacted the status of the agreement prior to the final signature. A final audit report will be generated when the agreement is complete.

"Flocc_Sed_Amendment_1_MEMO_(1)" History

Document created by RACHEL GABALDON (rdgabaldon@santafenm.gov)
2025-12-19 - 10:09:14 PM GMT- IP address: 63.232.20.2

Document emailed to JOHN BURNETT (jsburnett@santafenm.gov) for signature
2025-12-19 - 10:13:13 PM GMT

Email viewed by JOHN BURNETT (jsburnett@santafenm.gov)
2025-12-19 - 10:13:19 PM GMT- IP address: 51.54.38.120

Email viewed by JOHN BURNETT (jsburnett@santafenm.gov)
2025-12-22 - 3:34:18 PM GMT- IP address: 71.228.98.124

Document e-signed by JOHN BURNETT (jsburnett@santafenm.gov)
Signature Date: 2025-12-22 - 3:34:56 PM GMT - Time Source: server- IP address: 71.228.98.124

Document emailed to Rebecca Lovato-Sanouvong (ralovatosanouvong@santafenm.gov) for signature
2025-12-22 - 3:35:02 PM GMT

Email viewed by Rebecca Lovato-Sanouvong (ralovatosanouvong@santafenm.gov)
2025-12-22 - 3:36:04 PM GMT- IP address: 104.47.65.254

Document e-signed by Rebecca Lovato-Sanouvong (ralovatosanouvong@santafenm.gov)
Signature Date: 2025-12-22 - 3:37:32 PM GMT - Time Source: server- IP address: 63.232.20.2

Document emailed to ajhopkins@santafenm.gov ajhopkins@santafenm.gov (ajhopkins@santafenm.gov) for signature
2025-12-22 - 3:37:38 PM GMT

Powered by Adobe Acrobat Sign

Email viewed by ajhopkins@santafenm.gov ajhopkins@santafenm.gov (ajhopkins@santafenm.gov)
2026-01-05 - 5:07:00 PM GMT- IP address: 104.47.65.254

Document e-signed by ajhopkins@santafenm.gov ajhopkins@santafenm.gov (ajhopkins@santafenm.gov)
Signature Date: 2026-01-05 - 5:07:47 PM GMT - Time Source: server- IP address: 63.232.20.2

Document sent to JoAnn Lovato (jdlovato@santafenm.gov) and Travis Dutton-Leyda (tkduttonleyda@santafenm.gov) for signature. One of them to sign
2026-01-05 - 5:07:52 PM GMT

Email viewed by Travis Dutton-Leyda (tkduttonleyda@santafenm.gov)
2026-01-05 - 5:08:16 PM GMT- IP address: 63.232.20.2

Email viewed by JoAnn Lovato (jdlovato@santafenm.gov)
2026-01-05 - 5:11:09 PM GMT- IP address: 63.232.20.2

Powered by
Adobe
Acrobat Sign

CITY OF SANTA FE

Date: January 5, 2026

To: Governing Body

From: Carol Swenson, Public Works Business Operations Manager

Via: Sam Burnett, Interim Public Works Department Director SB

Matt Bonifer, Accounting Officer MB
MB (Jan 6, 2026 11:14:57 MST)

Subject: Capital Program Management

ACTION:
Request for Approval of a Budget Amendment Resolution (BAR) to Re-Appropriate $137,416 of the Unspent FY25 One-Time Appropriation from the General Fund Balance to FY26 Public Works Administration Professional Contracts for Capital Program Management (Sam Burnett, Interim Public Works Director, jsburnett@santafenm.gov).

BACKGROUND AND SUMMARY:
The Public Works Department has managed the annual ICIP process and legislative grants for the City since 2018. This contract will institutionalize that work using an experienced and proven contractor, New Mexico Grant Administration. The City currently has 74 active legislative grants with a value of $63M. Contractor will ensure efficient and transparent management of the ICIP process and legislative grant projects.

Governing Body approved a one-time FY25 appropriation of $400,000 for capital program services. Those funds were not spent, and this BAR reappropriates a portion of those funds for ICIP legislative grant administration services in FY26 by Public Works.

ATTACHMENTS:
BAR

Log # *{Finance use only}*:	
Journal # *{Finance use only}*:	

City of Santa Fe, New Mexico
BUDGET AMENDMENT RESOLUTION (BAR)

DEPARTMENT / DIVISION NAME	DATE
Public Works / Public Works Admin	1/5/2026

ITEM DESCRIPTION	ORG	OBJECT	PROJECT	INCREASE	DECREASE
EXPENDITURES				*{enter as positive #}*	*{enter as negative #}*
Professional Contracts	1006001	510300		137,416	
REVENUES				*{enter as negative #}*	*{enter as positive #}*
JUSTIFICATION: *(use additional page if needed)* *--Attach supporting documentation/memo*				$ 137,416	$ -

To transfer funding from a one-time appropriation to the Finance Department, from the General Fund fund balance, to FY26

Public Works Administration Professional Contracts for Capital Program Management.

{Complete section below if BAR results in a net change to ANY Fund}

Fund(s) Affected	Fund Balance Increase/(Decrease)
100	(137,416)
TOTAL:	**(137,416)**

Carol Swenson 1/5/2026
Prepared By *{print name}* Date

Division Director Signature *{optional}* Date

JOHN BURNETT (Jan 6, 2026 10:24:24 MST)
Department Director Signature Date

{Use this form for Finance Committee/ City Council agenda items ONLY}

CITY COUNCIL APPROVAL

City Council Approval Date

Agenda Item #:

Andy Hopkins
Budget Officer Date

Finance Director *{≤ $5,000}* Date

City Manager *{≤ $60,000}* Date

Account Inquiry [CITY OF SANTA FE]

Account

Fund	100	GENFUND	Acct	100-10-15-1501-000-00-000-510300-	
Org	1001501	Fin Admin	Acct name	Professional Contracts	
Object	510300	Prfsl Cntr	Type	Expense	Status
Project			Rollup	GFFNC	FinanceAdmin
			Sub-Rollup		

MultiYr Fund

4 Year Comparison | Current Year | History | 4 Year Graph | History Graph

Yr/Per 2025/01	Fiscal Year 2025	Fiscal Year 2024	Fiscal Y
Original Budget	150,000.00	.00	
Transfers In	400,000.00	5,000.00	
Transfers Out	.00	.00	
Revised Budget	550,000.00	5,000.00	
Actual (Memo)	4,949.96	16,736.01	
Encumbrances	.00	.00	
Requisitions	.00		
Available	545,050.04	-11,736.01	
Percent used	.90	334.72	

CITY OF SANTA FE

Date: January 6, 2026

To: Governing Body

From: Marlisa B. Wilson, Public Works Project Manager Marlisa B. Wilson

Via: Sam Burnett, Interim Public Works Department Director JOHN BURNETT (Jan 6, 2026 16:01:57 MST)
Tim Farrell, Interim Facilities Division Director Timothy Farrell

Subject: Siler Complex Fuel Station Remediation

Vendor Name: Advanced Environmental Solutions, Inc.

Vendor Number: 2079

ACTION:
Request for Approval of Amendment No. 1 to Construction Contract Item No. 25-0371 with Advanced Environmental Solutions, Inc. for Siler Complex Fuel Station Remediation to Extend the Term to March 31, 2026. (Marlisa B. Wilson, Public Works Project Manager, mbwilson@santafenm.gov)

CONTRACT NUMBER:
The original FY25 Munis Contract Number is 3250578.

BACKGROUND AND SUMMARY:
In August 2025, the Governing Body approved a construction contract with Advanced Environmental Solutions, Inc. (AES) to decommission and remediate the City's fuel station located at 1142 Siler Road. The removal activities and decommissioning work are making steady progress toward completion. However, there are potential delays in this last phase: analysis of subsurface conditions and potential remediation of contaminated soil will require additional time; state-required paperwork and fees associated with the disposal of contaminated material; and delays between tasks pending the return of analytical results. Therefore, the agreement with AES is being amended to extend the term from December 28, 2025, to March 31, 2026, to accommodate these final tasks, and there is no change in compensation.

A 30-Day Notification of Temporary Closure was filed with the State of New Mexico on February 18, 2025. A request for Permanent Closure was submitted and acknowledged by New Mexico Environment Department on October 13, 2025.

The project is funded through FY25 one-time funding. The contract includes a 25% contingency to accommodate some unforeseen soil remediation needs identified during excavation.

ATTACHMENTS:
Amendment No. 1 to Construction Contract Item No. 25-0371
Original Contract Packet
Statewide Price Agreement No. 40-00000-23-00034, Amend. No. 3
Certificate of Insurance

PRIOR APPROVALS AND SUPPORTING INFORMATION:

FUNDING SOURCE:
Fund Name/Number: FMD2532006
Munis Org Name/Number: 3209980
Munis Object Name/Number: 572970

Budget Officer/Designee: Andy Hopkins Date: 01/08/2026
Budget Officer Comment/Exceptions: _____

PROCUREMENT METHOD:
The procurement method used was NMSA 1978, Section 13-1-129, Statewide Price Agreement No. 40-00000-23-00034, which expires on December 28, 2026.

Chief Procurement Officer (CPO)/Designee: _____ Date: 01/08/2026
CPO Comment/Exceptions: _____

ASSOCIATED APPROVALS:

IT Components included? ☐ Yes | ☒ No
Approval: _____ Title: _____ Date: _____
Comment/Exceptions: _____

Treasury/Point of Sale Components included? ☐ Yes | ☒ No
Approval: _____ Title: _____ Date: _____
Comment/Exceptions: _____

Vehicles included? ☐ Yes | ☒ No
Approval: _____ Title: _____ Date: _____
Comment/Exceptions: _____

Construction to City Facilities, Furniture, and/or Fixtures, included? ☒ Yes | ☐ No
Approval: _____ Title: _____ Date: _____
Comment/Exceptions: Timothy Farrell

Is this an externally funded purchase? ☐ Yes | ☒ No
If yes, what is the issuing agency: _____
Approval: _____ Title: _____ Date: _____
Comment/Exceptions: _____

Capital Asset or Project? ☒ Yes | ☐ No
Project Ledger Number FMD2532006
Approval: Rebecca Lovato-Sanchez Title: Accounting Manager Date: 01/08/2026
Comment/Exceptions: _____

Is this a Grant Funded Purchase? ☐ Yes | ☒ No
Approval: _____ Title: _____ Date: _____
Comment/Exceptions: _____

Item No.: _____
Munis Contract No.: 3250578
Original Contract Item No.: 25-0371
SWPA No.: 40-00000-23-00037

CITY OF SANTA FE, PUBLIC WORKS
AMENDMENT No. 1 TO
Contract No. 3250578

CONSTRUCTION CONTRACT

This AMENDMENT No. 1 (the "Amendment") amends the CITY OF SANTA FE CONTRACT, dated August 16, 2025 (the "Contract"), between the City of Santa Fe (the "City") and **Advanced Environmental Solutions Inc.** (the "Contractor"). The date of this Amendment shall be the date when it is executed by the City and the Contractor whichever occurs last.

RECITALS:

A. Under the terms of the Contract, Contractor has agreed to provide the closures and remediation work for the fuel station located at 1142 Siler Road.

B. Pursuant to Article 14 of the Contract, and for good and valuable consideration, the receipt and sufficiency of which are acknowledged by the parties, the City and the Contractor agree as follows:

1. TERM

Article 3 of the Contract is hereby deleted in its entirety and substitute the following Article 3 in its place:

THIS CONTRACT SHALL BECOME EFFECTIVE AUGUST 16, 2025. This contract shall terminate on March 31, 2026. Statewide Price Agreement No. 40-00000-23-00034 states: The term of this Price Agreement shall be for one (1) year from date of award with the option to extend for a period of two (2) additional years, on a year-to-year basis, by mutual agreement of all parties and approval of the New Mexico State Purchasing Agent at the same price, terms and conditions. This Price Agreement shall not exceed three (3) years.

B. CONTRACT IN FULL FORCE

Except as specifically provided in this Amendment, the Contract remains and shall remain in full force and effect, in accordance with its terms.

IN WITNESS WHEREOF, the parties have executed this Amendment No. 1 to the Contract as of the dates set forth below.

CITY OF SANTA FE:

_____

_____
MICHAEL J. GARCIA, MAYOR

DATE:_____

CONTRACTOR:
Advanced Environmental Solutions Inc.

Douglas Roshau
Douglas Roshau (Dec 11, 2025 15:37:24 MST)
DOUGLAS ROSHAU
PROJECT MANAGER

DATE: Dec 11, 2025
NMBTIN: 02-425034-00-1

ATTEST:

_____

_____, CITY CLERK

CITY ATTORNEY'S OFFICE:

Kevin L. Nault
Kevin L. Nault (Dec 12, 2025 09:55:07 MST)
KEVIN NAULT, ASSISTANT CITY ATTORNEY

APPROVED FOR FINANCES:

BRIAN MOYA
_____

01/08/2026
_____, FINANCE DIRECTOR

Contract_Amend 1 Extend Term_AES_Siler Fuel Decommission

Final Audit Report 2025-12-12

Created:	2025-12-11
By:	MATTHEW HARDING (mrharding@santafenm.gov)
Status:	Signed
Transaction ID:	CBJCHBCAABAAbofc9XW_B4GWT_3SvhbdoiZuQMRu8gEv

"Contract_Amend 1 Extend Term_AES_Siler Fuel Decommission" History

Document created by MATTHEW HARDING (mrharding@santafenm.gov)
2025-12-11 - 10:12:06 PM GMT- IP address: 63.232.20.2

Document emailed to Douglas Roshau (droshau@aesnm.com) for signature
2025-12-11 - 10:12:50 PM GMT

Email viewed by Douglas Roshau (droshau@aesnm.com)
2025-12-11 - 10:36:34 PM GMT- IP address: 70.90.202.109

Document e-signed by Douglas Roshau (droshau@aesnm.com)
Signature Date: 2025-12-11 - 10:37:24 PM GMT - Time Source: server- IP address: 70.90.202.109

Document emailed to Kevin Nault (klnault@santafenm.gov) for signature
2025-12-11 - 10:37:26 PM GMT

Email viewed by Kevin Nault (klnault@santafenm.gov)
2025-12-12 - 4:54:26 PM GMT- IP address: 172.59.2.22

Signer Kevin Nault (klnault@santafenm.gov) entered name at signing as Kevin L. Nault
2025-12-12 - 4:55:05 PM GMT- IP address: 172.59.2.22

Document e-signed by Kevin L. Nault (klnault@santafenm.gov)
Signature Date: 2025-12-12 - 4:55:07 PM GMT - Time Source: server- IP address: 172.59.2.22

Agreement completed.
2025-12-12 - 4:55:07 PM GMT

Powered by Adobe Acrobat Sign

CITY OF SANTA FE

Date: July 8, 2025

To: Governing Body

From: Marlisa B. Wilson, Public Works Project Manager Marlisa B. Wilson

Via: Regina Wheeler, Public Works Department Director RW
RW (Jul 10, 2025 12:13 MDT)
Sam Burnett, Facilities Management Division Director
JOHN BURNETT (Jul 9, 2025 10:12 MDT)

Subject: Siler Complex Fuel Station Remediation

Vendor Name: Advanced Environmental Solutions, Inc.

Vendor Number: 2079

ACTION:
Request for Approval of a Construction Contract with Advanced Environmental Solutions, Inc. in the Total Amount of $224,205 for Siler Complex Fuel Station Remediation with Term Ending December 28, 2025. (Marlisa B. Wilson, Public Works Project Manager, mbwilson@santafenm.gov)

CONTRACT NUMBER:
The FY25 Munis Contract Number is 3250578.

BACKGROUND AND SUMMARY:
The City has determined that the fuel station located at 1142 Siler Road is no longer a necessary municipal asset. Continued operation would require substantial capital investment to address aging infrastructure, outdated equipment, and ongoing maintenance and regulatory compliance costs. With the successful adoption of the City's Fleet Fuel Program utilizing WEX cards, the station has become functionally obsolete. Accordingly, the fueling system, including underground storage tanks, will be decommissioned and remediated.

The station has been in operation for over 36 years. Proactively decommissioning the facility will help the City avoid future risks associated with aging fuel infrastructure and unsupported systems. There is no data indicating whether the system leaked.

Staff has met with NMED to understand compliance and risks and is proceeding with recommended process for decommissioning and remediation. The underground tanks will be removed, and subsurface soil conditions are assessed to determine whether additional remediation is required.

The City submitted a 30-Day Notice of Temporary Closure to the State of New Mexico on February 18, 2025. This notice remains valid for one year.

Advanced Environmental Solutions (AES) has been contracted to perform the closure and remediation work. Their scope includes the excavation of asphalt and soil to expose and remove the three underground storage tanks. Soil samples will be collected from beneath the tanks and analyzed

to determine if leakage has occurred. If contamination is present, additional work will be required that may require a contract amendment.

The project is funded through FY25 one-time funding. The contract includes a 25% contingency to accommodate some unforeseen soil remediation needs identified during excavation.

Project completion is anticipated within six months of the notice to proceed.

ATTACHMENTS:
Construction Contract
Proposal
Statewide Price Agreement No. 40-00000-23-00034
Certificate of Insurance
Horizons Service List
CPO Determination

PRIOR APPROVALS AND SUPPORTING INFORMATION:

FUNDING SOURCE:
Munis Org Name/Number: 3209980
Munis Object Name/Number: 572970

Budget Officer/Designee: Andy Hopkins Date: 07/14/2025
Budget Officer Comment/Exceptions: _____

PROCUREMENT METHOD:
The procurement method used was NMSA 1978, Section 13-1-129, Statewide Price Agreement No. 40-00000-23-00034, which expires on December 28, 2025.

Chief Procurement Officer (CPO)/Designee: JoAnn Lovato Montaño Date: 07/14/2025
CPO Comment/Exceptions: _____

ASSOCIATED APPROVALS:
IT Components included? ☐ Yes | ☒ No
Approval: _____ Title: _____ Date: _____
Comment/Exceptions: _____

Treasury/Point of Sale Components included? ☐ Yes | ☒ No
Approval: _____ Title: _____ Date: _____
Comment/Exceptions: _____

Vehicles included? ☐ Yes | ☒ No
Approval: _____ Title: _____ Date: _____
Comment/Exceptions: _____

Construction to City Facilities, Furniture, and/or Fixtures, included? ☒ Yes | ☐ No
Approval: _____ Title: _____ Date: _____
Comment/Exceptions: JOHN BURNETT (Jul 9, 2025 10:12 MDT)

Is this an externally funded purchase? ☐ Yes | ☒ No
If yes, what is the issuing agency: _____
Approval: _____ Title: _____ Date: _____
Comment/Exceptions: _____

Capital Asset or Project? ☐ Yes | ☒ No
Project Ledger Number _____
Approval: _____ Title: _____ Date: _____
Comment/Exceptions: _____

Is this a Grant Funded Purchase? ☐ Yes | ☒ No
Approval: _____ Title: _____ Date: _____
Comment/Exceptions: _____

Item #: 25-0371
Munis Contract #: 3250578
SWPA #: 40-00000-23-00034

CITY OF SANTA FE

CONSTRUCTION CONTRACT

THIS CONTRACT is made and entered into by and between the City of Santa Fe, New Mexico, hereinafter referred to as the "City," and **Advanced Environmental Solutions, Inc.**, hereinafter referred to as the "Contractor," and is effective as of the date set forth below upon which it is executed by the Parties.

RECITALS

WHEREAS, the City, through its Governing Body, is authorized to enter into a construction Contract for the project; and

WHEREAS, the City has procured this Contract according to the established State and Local Purchasing procedures for contracts of the type and amount; and

The City and the Contractor hereby agree as follows:

1. Scope of Work

A. The Contractor shall perform the following work:

1. Contractor will prepare and submit a 30-day notification of tanks removal to the NM Environmental Department for review and approval.
2. Contractor will notify New Mexico one Call and have the site spotted for all underground utilities which may require a private line locator sub-consultant to locate buried utilities in the excavation areas.
3. Provide and install temporary perimeter fencing.
4. Pump any remaining liquids from the tanks and place the fuel removed in UN Specification 55gl drums. The drums containing off-spec fuel will be marked and secured on-site pending profiling and disposal. An episodic EPA ID# will be required to properly dispose of the drums at a cost of $500 payable to NMED.
5. Demolish and remove the overhead canopy and transport for recycling/disposal.
6. Cut, remove and dispose of the removed concrete and asphalt from above the tanks, fuel lines and dispensers.
7. Excavate and expose the tanks, piping and dispensers. Remove the three UST's and disconnect all associate piping, drain and collect any residual fuel.
8. Remove the three UST's and disconnect all associate piping; drain and collect any residual fuel.
9. Rinse the interior of the tanks with fresh water. Pump the rinsate water from the tanks and place into UN Specification 55gl drums. The drums containing off-spec rinsate water will be marked and secured on-site pending profiling and disposal.

10. Inert the tanks utilizing CO2 or dry ice.
11. Cut a hole in each tank and inspect for residual sludge.
12. In the event there is waste present in the tanks, Contractor will collect any residual liquids/sludge from the tanks and collect into 55gl drums. Contractor will obtain representative samples of the sludge/fuel and relinquish to a certified Laboratory for BTEX/TPH/RCRA Metals analysis. Contractor will mark, secure and leave drums on site and provide the City of Santa Fe with pricing for subsequent disposal by Contractor.
13. Contractor will load, secure and transport tank shells on a Bill of Lading for recycling/disposal.
14. Remove the fuel dispensers, bollards and fuel island structures and transport for recycling/disposal.
15. Disconnect and remove the Veeder Root panel and associated conductor wire. Disconnect and remove any electrical conductor wires.
16. Contractor will collect the appropriate samples underneath and around the removed tanks, dispensers and related piping and relinquish the samples to a certified Laboratory for 8015B Total Petroleum Hydrocarbons analysis.
17. If the samples return confirming the excavation to be contaminated, Contractor will provide the City of Santa Fe with pricing for the proper removal and disposal of the contaminated soils.
18. If the results are confirmed to be Negative, Contractor will backfill and compact the site with clean backfill material.
19. Prepare the surface for re-paving.
20. Install 4" asphalt pavement over the fuel station footprint.

The Contractor shall be responsible for verifications of all conditions, measurements, and dimensions for bidding.

The Contractor shall be responsible for all permits, fees, and State inspections associated with the construction.

The Contractor shall comply with all applicable local, state, and federal laws and regulations.

B. Project: Siler Complex Fuel Station Remediation

C. City Department: Public Works Department – Facilities Management Division

D. Distribution:

City:
Marlisa Wilson
Project Manager
City of Santa Fe Public Works
2651 Siringo Road, Building E
PO Box 909
Santa Fe, NM 87504-0909
mbwilson@santafenm.gov

505-955-5937

Contractor:
Douglas Roshau
Project Manager
Advanced Environmental Solutions, Inc.
2318 Roldan Drive
Belen, NM 87002
droshau@aesnm.com
505-861-1700

2. Compensation

A. The City shall pay to the Contractor in full payment for services satisfactorily performed not to exceed two hundred twenty-four thousand two hundred four dollars and forty cents ($224,204.40), which includes a 25% contingency and New Mexico gross receipts tax of 8.1875%.

The Unit Bid Contract Total shall be paid as follows:

Base Quote	$165,789.50	
25% Contingency	$41,447.38	
Subtotal		$207,236.88
Gross Receipts Tax (8.1875%)		$16,967.52
Base Bid plus Contingency and NMGRT		$224,204.40

The total amount payable to the Contractor under this Contract shall not exceed two hundred twenty-four thousand two hundred four dollars and forty cents ($224,204.40). This amount is a maximum and not a guarantee that the work assigned to be performed by Contractor under this Contract shall equal the amount stated herein. The parties do not intend for the Contractor to continue to provide services without compensation when the total compensation amount is reached. Contractor is responsible for notifying the City when the services provided under this Contract reach the total compensation amount. In no event will the Contractor be paid for services provided in excess of the total compensation amount without this Contract being amended in writing prior to those services in excess of the total compensation amount being provided.

B. Payment is subject to availability of funds pursuant to the Appropriations Paragraph set forth below and to any negotiations between the parties from year to year pursuant to Paragraph 1, Scope of Work, and to approval by the City. All invoices MUST BE received by the City no later than thirty 30) days after the termination of the Fiscal Year in which the services were delivered. Invoices received after such date WILL NOT BE PAID.

C. Contractor must submit a detailed statement accounting for all services performed and expenses incurred. If the City finds that the services are not acceptable, within thirty days after the date of receipt of written notice from the Contractor that payment is requested, it shall provide the Contractor a letter of exception explaining the defect or objection to the services, and outlining steps the Contractor may take to provide remedial action. Upon certification by the City that the services have been received and accepted, payment shall be tendered to the Contractor within twenty-one days after the date of acceptance. If payment is made by mail, the payment shall be deemed tendered on the date it is postmarked.

D. If the City fails to pay the contractor within twenty-one days after receipt of an undisputed request for payment, the City shall pay interest to the contractor beginning on the twenty-second day after payment was due, computed at one and one-half percent of the undisputed amount per month or fraction of a month until the payment is issued. If the City receives an improperly completed invoice, the City shall notify the sender of the invoice within seven days of receipt in what way the invoice is improperly completed, and the owner has no further duty to pay on the improperly completed invoice until it is resubmitted as complete.

E. **Notice of Extended Payment Provision for Grant Funded Contracts**. This contract allows the City to make payment within 45 days after submission of an undisputed request for payment for contracts funded by grant money consistent with NMSA 1978, sec. 57-28-5(B).

3. Term

THIS CONTRACT SHALL NOT BECOME EFFECTIVE UNTIL APPROVED IN WRITING BY THE CITY. This contract shall terminate **December 28, 2025**. The City reserves the right to renew this contract on an annual basis by mutual agreement not to exceed a total of ten (10) years in accordance with NMSA 1978, Sections 13-1-150 through 152.

4. Termination

A. Grounds. The City may terminate this Contract for convenience or cause. For contracts within their authority, the City Manager or their designee is authorized to provide the notice of termination, otherwise such notice of termination shall be provided by the Mayor or their designee as authorized by the Governing Body. The Contractor may only terminate this Contract based upon the City's uncured, material breach of this Contract.

B. Notice; City Opportunity to Cure.

1) Except as otherwise provided in Paragraphs 7.A and 17, the City shall give Contractor written notice of termination at least thirty (30) days prior to the intended date of termination.

2) Contractor shall give City written notice of termination at least thirty (30) days prior to the intended date of termination, which notice shall (i) identify all the City's material breaches of this Contract upon which the termination is based and (ii) state what the City must do to cure such material breaches. Contractor's notice of termination shall only be effective (i) if the City does not cure all material breaches within the thirty (30) day notice period or (ii) in the case of material breaches that cannot be cured within thirty (30) days, the City does not, within the thirty (30) day notice period, notify the Contractor of its intent to cure and begin with due diligence to cure the material breach.

3) Notwithstanding the foregoing, this Contract may be terminated immediately upon written notice to the Contractor (i) if the Contractor becomes unable to perform the services contracted for, as determined by the City; (ii) if, during the term of this Contract, the Contractor is suspended or debarred by the City; or (iii) the Contract is terminated pursuant to Paragraph 5, "Appropriations," of this Contract.

C. Liability. Except as otherwise expressly allowed or provided under this Contract, the City's sole liability upon termination shall be to pay for acceptable work performed prior to the Contractor's receipt or issuance of a notice of termination; provided, however, that a notice of termination shall not nullify or otherwise affect either party's liability for pre-termination defaults under or breaches of this Contract. The Contractor shall submit an invoice for such work within thirty (30) days of receiving or sending the notice of termination. *THIS PROVISION IS NOT EXCLUSIVE AND DOES NOT WAIVE THE CITY'S OTHER LEGAL RIGHTS AND REMEDIES CAUSED BY THE CONTRACTOR'S DEFAULT/BREACH OF THIS CONTRACT.*

5. Appropriations

The terms of this Contract are contingent upon sufficient appropriations and authorization being made by the Governing Body for the performance of this Contract. If sufficient appropriations and authorization are not made by the Governing Body, this Contract shall terminate immediately upon written notice being given by the City to the Contractor. The City's decision as to whether sufficient appropriations are available shall be accepted by the Contractor and shall be final. If the City proposes an amendment to the Contract to unilaterally reduce funding, the Contractor shall have the option to terminate the Contract or to agree to the reduced funding, within thirty (30) days of receipt of the proposed amendment.

6. Status of Contractor

The Contractor and its agents and employees are independent contractors performing construction services for the City and are not employees of the City. The Contractor and its agents and employees shall not accrue leave, retirement, insurance, bonding, use of City vehicles, or any other benefits afforded to employees of the City as a result of this Contract. The Contractor acknowledges that all sums received hereunder are reportable by the Contractor for tax purposes, including without limitation, self-employment and business income tax. The Contractor agrees not to purport to bind the City unless the Contractor has express written authority to do so, and then only within the strict limits of that authority.

7. Construction Contract Performance and Payment Bond

A. When a construction contract is awarded in excess of twenty-five thousand dollars ($25,000), the following bonds or security shall be delivered to the City and shall become binding on the parties upon the execution of the contract. If the Contractor fails to deliver the required performance and payment bonds, the Contractor's bid shall be rejected, its bid security shall be enforced to the extent of actual damages. Award of the contract shall be made pursuant to the Procurement Code in the following manner:

1) a performance bond satisfactory to the City, executed by a surety company authorized to do business in this state and said surety to be approved in federal circular 570 as published by the United States treasury department or the state board of finance or the local governing authority, in an amount equal to one hundred percent of the price specified in the contract; and

2) a payment bond satisfactory to the City, executed by a surety company authorized to do business in this state and said surety to be approved in federal circular 570 as published by the United States treasury department or the state board of finance or the local governing authority, in an amount equal to one hundred percent of the price specified in the contract, for the protection of all persons supplying labor and material to the contractor or its subcontractors for the performance of the work provided for in the contract.

B. A subcontractor shall provide a performance and payment bond on a public works building project if the subcontractor's contract for work to be performed on a project is one hundred twenty-five thousand dollars ($125,000) or more.

8. Assignment

The Contractor shall not assign or transfer any interest in this Contract or assign any claims for money due or to become due under this Contract without the prior written approval of the City.

9. Subcontracting

The Contractor shall not subcontract any portion of the services to be performed under this Contract without the prior written approval of the City. No such subcontract shall relieve the primary Contractor from its obligations and liabilities under this Contract, nor shall any subcontract obligate direct payment from the City.

10. Release

Final payment of the amounts due under this Contract shall operate as a release of the City, its officers and employees from all liabilities, claims and obligations whatsoever arising from or under this Contract.

11. Confidentiality

Any confidential information provided to or developed by the Contractor in the performance of this Contract shall be kept confidential and shall not be made available to any individual or organization by the Contractor without the prior written approval of the City.

12. Product of Service -- Copyright

All materials developed or acquired by the Contractor under this Contract shall become the property of the City and shall be delivered to the City no later than the termination date of this Contract. Nothing developed or produced, in whole or in part, by the Contractor under this Contract shall be the subject of an application for copyright or other claim of ownership by or on behalf of the Contractor.

13. Conflict of Interest; Governmental Conduct Act

A. The Contractor represents and warrants that it presently has no interest and, during the term of this Contract, shall not acquire any interest, direct or indirect, which would conflict in any manner or degree with the performance or services required under the Contract.

B. The Contractor further represents and warrants that it has complied with, and, during the term of this Contract, will continue to comply with, and that this Contract complies with all applicable provisions of the Governmental Conduct Act, Chapter 10, Article 16 NMSA 1978.

C. Contractor's representations and warranties in Paragraphs A and B of this Article 12 are material representations of fact upon which the City relied when this Contract was entered into by the parties. Contractor shall provide immediate written notice to the City if, at any time during the term of this Contract, Contractor learns that Contractor's representations and warranties in Paragraphs A and B of this Article 12 were erroneous on the effective date of this Contract or have become erroneous by reason of new or changed circumstances. If it is later determined that Contractor's representations and warranties in Paragraphs A and B of this Article 12 were erroneous on the effective date of this Contract or have become erroneous by reason of new or changed circumstances, in addition to other remedies available to the City and notwithstanding anything in the Contract to the contrary, the City may immediately terminate the Contract.

D. All terms defined in the Governmental Conduct Act have the same meaning in this section.

14. Amendment

A. This Contract shall not be altered, changed or amended except by instrument in writing executed by the parties hereto and all other required signatories.

B. If the City proposes an amendment to the Contract to unilaterally reduce funding due to budget or other considerations, the Contractor shall, within thirty (30) days of receipt of the proposed Amendment, have the option to terminate the Contract, pursuant to the termination provisions as set forth in Article 4 herein, or to agree to the reduced funding.

15. Change Orders

A. Changes. The Contractor may only make changes or revisions within the Scope of Work as defined by Article 1 and/or Exhibit 1 after receipt of written approval by the City Manager or his/her designee. Such change may only be made to Tasks or Sub-Task as defined in the Scope of Work. Under no circumstance shall such change affect the:

1) Deliverable requirements, as outlined in the Scope of Work;
2) Due date of any Deliverable, as outlined in the Scope of Work;
3) Compensation of any Deliverable, as outlined in the Scope of Work;
4) Contract compensation, as outlined in Article 2; or
5) Contract termination, as outlined in Article 4.

B. Change Request Process. In the event that circumstances warrant a change to accomplish the Scope of Work as described above, a Change Request shall be submitted that meets the following criteria:

1) The Project Manager shall draft a written Change Request for review and approval by the City Manager to include:
   (a) the name of the person requesting the change;
   (b) a summary of the required change;
   (c) the start date for the change;
   (d) the reason and necessity for change;
   (e) the elements to be altered; and
   (f) the impact of the change.

2) The City Manager shall provide a written decision on the Change Request to the Contractor within a maximum of ten (10) Business Days of receipt of the Change Request. All decisions made by the City Manager are final. Change Requests, once approved, become a part of the Contract, and become binding as a part of the original Contract.

16. Merger

This Contract incorporates all the agreements, covenants, and understandings between the parties hereto concerning the subject matter hereof, and all such covenants, agreements and understandings have been merged into this written contract.

This Contract is issued against the state or agency Master Agreement, established and maintained by the State of New Mexico General Services Department Purchasing Division, SWPA 40-00000-23-00034, Amendment No. 2, and through this language hereby incorporates this Contract by reference and is included in the order of precedence.

No prior Agreement or understanding, oral or otherwise, of the parties or their agents shall be valid or enforceable unless embodied in this Contract.

17. Penalties for Violation of Law

NMSA 1978, sections 13-1-28 through 13-1-199, imposes civil and criminal penalties for its violation. In addition, the New Mexico criminal statutes impose felony penalties for illegal bribes, gratuities and kickbacks.

18. Equal Opportunity Compliance

The Contractor agrees to abide by all federal and state laws and rules and regulations, and Santa Fe City Code, pertaining to equal employment opportunity. In accordance with all such laws of the State of New Mexico, the Contractor assures that no person in the United States shall, on the grounds of race, religion, color, national origin, ancestry, sex, age, physical or mental handicap, or serious medical condition, spousal affiliation, sexual orientation or gender identity, be excluded from employment with or participation in, be denied the benefits of, or be otherwise subjected to discrimination under any program or activity performed under this Contract. If Contractor is found not to be in compliance with these requirements during the life of this Contract, Contractor agrees to take appropriate steps to correct these deficiencies.

19. Applicable Law

The laws of the State of New Mexico shall govern this Contract, without giving effect to its choice of law provisions. Venue shall be proper only in a New Mexico court of competent jurisdiction in accordance with NMSA 1978, section 38-3-2. By execution of this Contract, Contractor acknowledges and agrees to the jurisdiction of the courts of the State of New Mexico over any and all lawsuits arising under or out of any term of this Contract.

20. Workers' Compensation

The Contractor agrees to comply with state laws and rules applicable to workers compensation benefits for its employees. If the Contractor fails to comply with the Workers Compensation Act and applicable rules when required to do so, this Contract may be terminated by the City.

21. Other Insurance

If the services contemplated under this Contract will be performed on or in City facilities or property, Contractor shall maintain in force during the entire term of this Contract, the following insurance coverage(s), naming the City as additional insured.

A. **Commercial General Liability** insurance shall be written on an occurrence basis and be a broad as ISO Form CG 00 01 with limits not less than $2,000,000 per occurrence and $2,000,000 in the aggregate for claims against bodily injury, personal and advertising injury, and property damage. Said policy shall include broad form Contractual Liability coverage and be endorsed to name the City of Santa Fe their officials, officers, employees, and agents as additional insureds.

B. **Business Automobile Liability** insurance for all owned, non-owned automobiles, with a combined single limit not less than $1,000,000 per accident.

C. **Broader Coverage and Limits**. The insurance requirements under this Contract shall be the greater of (1) the minimum coverage and limits specified in this Contract, or (2) the broader coverage and maximum limits of coverage of any insurance policy or proceeds available to the Named Insured. It is agreed that these insurance requirements shall not in any way act to reduce coverage that is broader or that includes higher limits than the minimums required herein. No representation is made that the minimum insurance requirements of this Contract are sufficient to cover the obligations of Contractor hereunder.

D. Contractor shall maintain the above insurance for the term of this Contract and name the City as an additional insured and provide for 30 days cancellation notice on any Certificate of Insurance form furnished by Contractor. Such certificate shall also specifically state the coverage provided under the policy is primary over any other valid and collectible insurance and provide a waiver of subrogation.

22. Records and Financial Audit

The Contractor shall maintain detailed time and expenditure records that indicate the date; time, nature and cost of services rendered during the Contract's term and effect and retain them for a period of three (3) years from the date of final payment under this Contract. The records shall be subject to inspection by the City. The City shall have the right to audit billings both before and after payment. Payment under this Contract shall not foreclose the right of the City to recover excessive or illegal payments.

23. Indemnification

The Contractor shall indemnify, hold harmless, or insure the City, including its officers, employees or agents, against liability, claims, damages, losses or expenses, including attorney fees, only to the extent that the liability, damages, losses or costs are caused by, or arise out of, the acts or omissions of the indemnitor or its officers, employees or agents. In the event that any action, suit or proceeding related to the services performed by the Contractor or any officer, agent, employee, servant or subcontractor under this Contract is brought against the Contractor, the Contractor shall, as soon as practicable but no later than two (2) business days after it receives notice thereof, notify the legal counsel of the City.

24. New Mexico Tort Claims Act

Any liability incurred by the City of Santa Fe in connection with this Contract is subject to the immunities and limitations of the New Mexico Tort Claims Act, Section 41-4-1, et. seq. NMSA 1978, as amended. The City and its "public employees" as defined in the New Mexico Tort Claims Act, do not waive sovereign immunity, do not waive any defense and do not waive any limitation of liability pursuant to law. No provision in this Contract modifies or waives any provision of the New Mexico Tort Claims Act.

25. Invalid Term or Condition

If any term or condition of this Contract shall be held invalid or unenforceable, the remainder of this Contract shall not be affected and shall be valid and enforceable.

26. Enforcement of Contract

A party's failure to require strict performance of any provision of this Contract shall not waive or diminish that party's right thereafter to demand strict compliance with that or any other provision. No waiver by a party of any of its rights under this Contract shall be effective unless express and in writing, and no effective waiver by a party of any of its rights shall be effective to waive any other rights.

27. Notices

Any notice required to be given to either party by this Contract shall be in writing and shall be delivered in person, by courier service or by U.S. mail, either first class or certified, return receipt requested, postage prepaid, as follows:

To the City:
Marlisa Wilson
Project Manager
City of Santa Fe Public Works
2651 Siringo Road, Building E
PO Box 909
Santa Fe, NM 87504-0909
mbwilson@santafenm.gov
505-955-5937

To the Contractor
Douglas Roshau
Project Manager
Advanced Environmental Solutions, Inc.
2318 Roldan Drive
Belen, NM 87002
droshau@aesnm.com
505-861-1700

28. Authority

If Contractor is other than a natural person, the individual(s) signing this Contract on behalf of Contractor represents and warrants that he or she has the power and authority to bind Contractor, and that no further action, resolution, or approval from Contractor is necessary to enter into a binding contract.

29. Progress Payments

Based upon Application for Payment submitted to the City by the Contractor and Certificates for Payment issued by the City, the City shall make progress payments on account of the Contract sum to the Contractor as provided in the Contract documents for the period ending the last day of the month as follows:

Not later than twenty-one (21) days following the end of the period covered by the Application for Payment, one hundred percent (100%) of the portion of the Contract Sum properly allocable to labor, materials, and equipment incorporated in the work and one hundred percent (100%) of the portion of the Contract sum properly allocable to materials and equipment suitably stored at the site or some other location agreed upon in writing for the period covered by the Application for Payment, less the aggregate of previous payments made by the City; and upon substantial completion of the entire work, a sum sufficient to increase the total payments to one hundred percent (100%) of the Contract sum, less such amounts as the City shall determine for all incomplete work and unsettled claims as provided in the Contract documents.

30. Final Payment

Final payment, constituting the entire unpaid balance of the Contract sum, unless it is a disputed payment, shall be paid by the City to the Contractor within twenty-one (21) calendar days, after all deficiencies to the Contract document that were noted during the Substantial Completion Inspection and listed on the attachment to the Certificate of Substantial Completion have been corrected, and provided the Contract has been fully performed and a final Certificate for Payment has been issued by the City. In addition, the Contractor shall provide to the City a certified statement of Release of Lien (AIA Document G706A or approved form), Consent of Surety, Warranty from Prime Contractor, Warranties from Suppliers and Manufacturers, training sessions, equipment/operating manuals, and as-built drawings.

31. Schedule

The Contractor shall, within five (5) days after the effective date of Notice to Proceed, prepare and submit a progress schedule covering project operations for the 30-day Contract period. This progress schedule shall be of the type generally referred to as a Critical Path Method (CPM), Critical Path Schedule (CPS), and Critical Path Analysis (CPA), and other similar designations. The CPM shall be used to control the timing and sequences of the project. All work shall be done in accordance with the CPM Planning and Scheduling. A written statement of explanation shall be submitted with the progress schedule. All costs incurred by the contractor to implement the CPM shall be borne by the Contractor and are part of their Contract.

32. General and Special Provisions

A. Terms used in this Contract which are defined in the Conditions of the Contract shall have the meanings designated in those Conditions.

B. An enumeration of the Contractor's General Comprehensive Liability Insurance requirements appears in the General Conditions of the Contract for construction. Insurance requirements are also described in the Instructions to the Bidder section of the Project Manual. Contractor shall maintain adequate insurance in at least the maximum amounts, which the City

could be liable under the New Mexico Tort Claims Act and shall provide proof of such insurance coverage to the City. It is the sole responsibility of the Contractor to comply with the law.

C. This Contract shall not become effective until: (1) approved by the Governing Body; and (2) signed by all parties required to sign this Contract.

D. The Contractor shall maintain detailed time records which indicate the date, time and nature of services rendered. These records shall be subject to inspection by the City, the Department of Finance and Administration and the State Auditor. The City shall have the right to audit billings both before and after payment. Payment under this Contract shall not foreclose the right of the City to recover excessive illegal payments.

E. The Contractor warrants that the Contractor presently has no interest and shall not acquire any interest, direct or indirect, which would conflict in any manner or degree with the performance or services required under this Contract.

F. The Contractor hereby warrants that the Contractor complies with the Americans with Disabilities Act, 29 CFR 1630.

G. Gender, Singular/Plural. Words of any gender used in this Contract shall be held and construed to include any other gender, and words in the singular number shall be held to include the plural, unless the context otherwise requires.

H. Captions and Section Headings. The captions and section headings contained in this Contract are for convenience of reference only, and in no way limit, define, or enlarge the terms, scope, and conditions of this Contract.

I. Certificates and Documents Incorporated. All certificates and documentation required by the provisions of the Contract shall be attached to this Contract at the time of execution and are hereby incorporated by reference as though set forth in full in this Contract to the extent they are consistent with its conditions and terms.

J. Separability. If any clause or provision of this Contract is illegal, invalid or unenforceable under present or future laws effective during the term of this Contract, then and in that event, it is the intention of the parties hereto that the remainder of this Contract shall not be affected thereby.

K. Words and Phrases. Words, phrases, and abbreviations, which have well-known technical or trade meanings used in the Contract documents shall be used according to such recognized meaning. In the event of a conflict, the more stringent meaning shall govern.

L. Relationship of Contract Documents. The Contract Documents are complementary, and any requirement of one Contract Document shall be as binding as if required by all.

M. Pursuant to NMSA 1978, section 13-1-191, reference is hereby made to the Criminal Laws of New Mexico (including NMSA 1978, sections 30-14-1, 30-24-2, and 30-41-1 through 30-41-3) which prohibit bribes, kickbacks, and gratuities, violation of which constitutes a felony. Further,

the Procurement Code (NMSA 1978, sections 13-1-28 through 13-1-199) imposes civil and criminal penalties for its violation.

N. Pursuant to NMSA 1978, section 13-4-11. Reference is hereby made to the Minimum Wage on Public Works; weekly payments; posting wage scale; withholding funds.

IN WITNESS WHEREOF, the Parties have executed this Contract as of the date of the signature by the required approval authorities below.

CITY OF SANTA FE:

Alan Webber (Aug 16, 2025 13:41:08 MDT)

ALAN WEBBER, MAYOR

DATE: _____

CONTRACTOR:
Advanced Environmental Solutions, Inc.

Douglas Roshau

NAME: Douglas Roshau (May 19, 2025 09:57 MDT)
TITLE:

DATE: _____

NMBTIN#: 02-425034-00-1

ATTEST:

ANDREA SALAZAR/CITY CLERK

GB MNTG 08-13-25

CITY ATTORNEY'S OFFICE:

Marcos Martinez

Marcos Martinez (May 19, 2025 08:53 MDT)

SENIOR ASSISTANT CITY ATTORNEY

APPROVED FOR FINANCES:

Emily K. Oster

EMILY OSTER/FINANCE DIRECTOR

Construction Contract_Advanced Environmental_Siler Fuel Station_FINAL

Final Audit Report 2025-05-19

Created:	2025-05-19
By:	JULIE KENNY (jckenny@santafenm.gov)
Status:	Signed
Transaction ID:	CBJCHBCAABAAI0CKG_X_bGHVnpggBIVEvxuu9tIaFsQw

"Construction Contract_Advanced Environmental_Siler Fuel Station_FINAL" History

Document created by JULIE KENNY (jckenny@santafenm.gov)
2025-05-19 - 2:52:17 PM GMT- IP address: 63.232.20.2

Document emailed to Marcos Martinez (mdmartinez@santafenm.gov) for signature
2025-05-19 - 2:52:40 PM GMT

Email viewed by Marcos Martinez (mdmartinez@santafenm.gov)
2025-05-19 - 2:52:51 PM GMT- IP address: 76.127.1.192

Document e-signed by Marcos Martinez (mdmartinez@santafenm.gov)
Signature Date: 2025-05-19 - 2:53:04 PM GMT - Time Source: server- IP address: 76.127.1.192

Agreement completed.
2025-05-19 - 2:53:04 PM GMT

Powered by Adobe Acrobat Sign

Construction Contract_Advanced Environmental_Siler Fuel Station_FINAL CAO

Final Audit Report 2025-05-19

Created:	2025-05-19
By:	Elizabeth Kahahane (elkahahane@santafenm.gov)
Status:	Signed
Transaction ID:	CBJCHBCAABAAslrnf8uZw6OWD7ylHcKwe4e3lqH64od9

"Construction Contract_Advanced Environmental_Siler Fuel Station_FINAL CAO" History

Document created by Elizabeth Kahahane (elkahahane@santafenm.gov)
2025-05-19 - 3:44:13 PM GMT- IP address: 63.232.20.2

Document emailed to droshau@aesnm.com for signature
2025-05-19 - 3:45:33 PM GMT

Email viewed by droshau@aesnm.com
2025-05-19 - 3:52:40 PM GMT- IP address: 70.90.202.109

Signer droshau@aesnm.com entered name at signing as Douglas Roshau
2025-05-19 - 3:57:53 PM GMT- IP address: 70.90.202.109

Document e-signed by Douglas Roshau (droshau@aesnm.com)
Signature Date: 2025-05-19 - 3:57:55 PM GMT - Time Source: server- IP address: 70.90.202.109

Agreement completed.
2025-05-19 - 3:57:55 PM GMT

Powered by Adobe Acrobat Sign

ADVANCED ENVIRONMENTAL SOLUTIONS

2318 Roldan Drive • Belen, New Mexico 87002
(505) 861-1700 • Fax (505) 864-1710
24 hr. Emergency #: (505) 861-1700, Ext #7
e-mail: droshau@aesnm.com

April 4, 2025

Marlisa Wilson
City of Santa Fe
Facilities Division
2651 Siringo Road
Santa Fe, NM 87504

Re: Closure of Siler Fuel Station **Proposal #: 250332DR**

Dear Ms. Wilson:

We understand this quotation is for providing tank removal notification to NMED to remove three underground fuel storage tanks at the Siler Fuel Station in Santa Fe, NM. Associated infrastructure will also be removed including underground piping, fuel islands, dispensers, Vender Root system, electrical conductors and the canopy. Also included is the fuel pumping, containment, transportation, and disposal, inerting the tanks' interior prior to tanks removal and transportation for recycling. This quote also includes soil sampling below the tanks and distribution pipelines. Following analytical results indicating the soil under the tanks is "clean", the excavation areas will be backfilled and wheel compacted and the entire fueling station "footprint" will be re-surfaced with 4" asphalt pavement.

The following general **Scope of Work** has been established for the safe and compliant completion of this project:

1. Advanced Environmental Solutions, Inc. (AES) will prepare and submit a 30-day notification of tanks removal to the NM Environmental Department for review and approval.
2. AES will notify New Mexico one Call and have the site spotted for buried utilities and possibly contact a private line locator to locate buried utilities in the excavation areas.
3. Provide and install temporary perimeter fencing.
4. Pump any remaining liquids from the tanks and place the fuel removed in UN Specification 55gl drums. The drums containing off-spec fuel will be marked and secured on-site pending profiling and disposal. An episodic EPA ID# will be required to properly dispose of the drums at a cost of $500 payable to NMED.
5. Demolish and remove the overhead canopy and transport for recycling/disposal.
6. Cut, remove and dispose of the removed concrete and asphalt from above the tanks, fuel lines and dispensers.
7. Excavate and expose the tanks, piping and dispensers. Remove the three UST's and disconnect all associate piping, drain and collect any residual fuel.
8. Remove the three UST's and disconnect all associate piping; drain and collect any residual fuel.
9. Rinse the interior of the tanks with fresh water. Pump the rinsate water from the tanks and place into UN Specification 55gl drums. The drums containing off-spec rinsate water will be marked and secured on-site pending profiling and disposal.
10. Inert the tanks utilizing CO2 or dry ice.
11. Cut a hole in each tank and inspect for residual sludge.
12. In the event there is waste present in the tanks, AES will collect any residual liquids/sludge from the tanks and collect into 55gl drums. AES will obtain representative samples of the sludge/fuel and relinquish to a certified Laboratory for BTEX/TPH/RCRA Metals analysis. AES will mark, secure and leave drums on site and provide the City of Santa Fe with pricing for subsequent disposal by AES.

13. AES will load, secure and transport tank shells on a Bill of Lading for recycling/disposal.
14. Remove the fuel dispensers, bollards and fuel island structures and transport for recycling/disposal.
15. Disconnect and remove the Veeder Root panel and associated conductor wire. Disconnect and remove any electrical conductor wires.
16. AES will collect the appropriate samples underneath and around the removed tanks, dispensers and related piping and relinquish the samples to a certified Laboratory for 8015B Total Petroleum Hydrocarbons analysis.
17. **If the samples return confirming the excavation to be contaminated, AES will provide the City of Santa Fe with pricing for the proper removal and disposal of the contaminated soils.**
18. If the results are confirmed to be Negative, AES will backfill and compact the site with clean backfill material.
19. Prepare the surface for re-paving.
20. Install 4" asphalt pavement over the fuel station footprint.

Thank you for the opportunity to submit this proposal. We appreciate your consideration and look forward to working with you.

Sincerely,

Douglas Roshau
Project Manager
Advanced Environmental Solutions, Inc.

April 4, 2025

QUOTATION

Re: Closure of Siler Fuel Station **Proposal #: 250332DR**

TERMS AND CONDITIONS/NOTES:

- Quote valid for 30 days.
- Payment Terms: Net 30 Days.
- Subject to weather and equipment availability, AES will mobilize within 10 days of written notice to proceed.
- City of Santa Fe will provide access and egress onto the site.
- AES will provide services at the direction of your field representative. We understand that he/she is authorized by you company to make changes to the above referenced Scope of Work unless otherwise noted.
- All AES staff will work using Level "D" personal protective equipment (PPE).

If this proposal is acceptable, please sign below and return a copy to us to complete execution. It is intended that all work performed on this project will be governed by terms, conditions, and pricing set forth in this Agreement. Any and all changes to the established Scope of Work and/or Quotation must be agreed to by both parties and accompanied by a signed Addendum.

Executed By **Advanced Env'l Solutions, Inc.:**	**Executed By** **City of Santa Fe:**
_____ **Signature – Authorized Representative**	_____ **Signature – Authorized Representative**
_____ **Name and Title**	_____ **Name and Title**
_____ **Date**	_____ **Date**

Attachment: Pricing Schedule

Closure of Siler Fuel Station
250332DR

DESCRIPTION	UNITS	QTY.	UNIT PRICE	EXTENDED PRICE
Tanks Removal per SOW:				
NMED Notification-Project Manager	hours	2	$ 90.00	$ 180.00
Subtotal				$ 180.00
Install Fence, Pump Remaining Fuel and Rinse Tank's Interior:				
Project Manager	hours	8	$ 90.00	$ 720.00
Supervisor	hours	18	$ 75.00	$ 1,350.00
Technician(2)	hours	36	$ 120.00	$ 4,320.00
HazMat Vehicle and Mileage	day	3	$ 425.00	$ 1,275.00
Equipment	day	2	$ 575.00	$ 1,150.00
55-gallon Drums	ea*	5	$ 120.00	$ 600.00
Transportation and Disposal-Off Spec Fuel	ea*	3	$ 450.00	$ 1,350.00
Transportation and Disposal-Rinsate Water	ea*	2	$ 575.00	$ 1,150.00
Install Temporary Fence -Need Price	lot	1	$ 2,250.00	$ 2,250.00
Subtotal				$ 13,445.00
Demolish Canopy and Fuel Island Dispensers and Structures, Remove Veeder Root And Conductors				
Supervisor	hours	36	$ 75.00	$ 2,700.00
Technician/Operator	hours	72	$ 120.00	$ 8,640.00
HazMat Vehicle and Mileage	day	4	$ 425.00	$ 1,700.00
Equipment Delivery and Pickup	each	2	$ 700.00	$ 1,400.00
Excavator	day	4	$ 1,150.00	$ 4,600.00
Manlift	day	4	$ 425.00	$ 1,700.00
Canopy Disposal	lot	1	$ 1,500.00	$ 1,500.00
Subtotal				$ 22,240.00
Cut, remove and dispose of concrete and asphalt surfaces				
Supervisor	hours	27	$ 75.00	$ 2,025.00
Technician/Operator	hours	54	$ 120.00	$ 6,480.00
HazMat Vehicle and Mileage	day	3	$ 425.00	$ 1,275.00
Equipment Delivery and Pickup	each	2	$ 700.00	$ 1,400.00
Skitsteer with Breaker	day	3	$ 750.00	$ 2,250.00
Backhoe	day	3	$ 525.00	$ 1,575.00
Concrete and asphalt disposal	yard*	120	$ 102.50	$ 12,300.00
Subtotal				$ 27,305.00
Expose and Remove Underground Tank and Piping and Sampling				
Project Manager	hours	8	$ 90.00	$ 720.00
Supervisor	hours	36	$ 75.00	$ 2,700.00
Technician/Operator	hours	72	$ 120.00	$ 8,640.00
HazMat Vehicle and Mileage	day	5	$ 425.00	$ 2,125.00
Equipment Delivery and Pickup	each	2	$ 700.00	$ 1,400.00
Excavator	day	4	$ 1,150.00	$ 4,600.00
Backhoe	day	4	$ 750.00	$ 3,000.00
Tank Transportation and recycling/disposal	each	3	$ 875.00	$ 2,625.00
Dry Ice(CO_2)	lbs	600	$ 1.75	$ 1,050.00

Closure of Siler Fuel Station
250332DR

PID Meter	day	1	$ 250.00	$ 250.00
Total Petroleum Hydrocarbons Sampling and Analysis	set	18	$ 144.00	$ 2,592.00
Subtotal				$ 28,982.00
Backfill excavation area and prepare surface for asphalt				
Supervisor	hours	18	$ 75.00	$ 1,350.00
Technician/Operator	hours	36	$ 120.00	$ 4,320.00
Equipment Delivery and Pickup	each	1	$ 700.00	$ 700.00
Backhoe	day	2	$ 750.00	$ 1,500.00
Backfill with delivery	yd*	170	$ 57.50	$ 9,775.00
Subtotal				$ 17,645.00
Install Asphalt Pavement				
Supervisor	hours	27	$ 75.00	$ 2,025.00
HazMat Vehicle and Mileage	day	3	$ 425.00	$ 1,275.00
Asphalt Pavement Installation 9,000 ft^2	lot	1	$ 52,000.00	$ 52,000.00
Subtotal				$ 55,300.00
*Estimated Quantity				
			Subtotal	$ 165,097.00
18 days Duration			Tax 8.1875%	$ 13,517.32
			TOTAL	**$ 178,614.32**

Docusign Envelope ID: F7054613-D4F6-4F51-88B2-8AAEDECCAACE

State of New Mexico
General Services Department
Purchasing Division

Statewide Price Agreement Amendment

Awarded Vendor:
51 Vendors

Ship To:
All State of New Mexico agencies, commissions, institutions, political subdivisions and local public bodies allowed by law.

Invoice:
As Requested at Time of Order

Number: **40-00000-23-00034**

Amendment No.: **Two**

Term: **December 29, 2023 – December 28, 2025**

Procurement Specialist: **Yvette Anaya** ya

Telephone No.: **(505) 500-9737**

Email: **Yvette.anaya@gsd.nm.gov**

Title: **General Construction Services**

This amendment is to be attached to the respective Price Agreement and become a part thereof.

In accordance with Price Agreement provisions, and by mutual agreement of all parties, this Price Agreement is extended from December 29, 2024 to December 28, 2025 at the same price, terms and conditions.

This amendment is issued to reflect the following effective immediately. See Attached pages for vendor information and pricing escalation for (BF) B & D Industries, Inc.

Except as modified by this amendment, the provisions of the Price Agreement shall remain in full force and effect.

Accepted for the State of New Mexico

Dorothy Mendonca

Date: 12/26/2024

Dorothy Mendonca
New Mexico State Purchasing Agent

Docusign Envelope ID: F7054613-D4F6-4F51-88B2-8AAEDECCAACE

B&D Industries, Inc. (AF)					
Column1	**Item**	**UOM**	**Description**	**Current Rate**	**New Rate**
Under $60,000	1	Hour	Superintendent, regular hours	$ 105.00	**$ 105.00**
Under $60,000	2	Hour	Superintendent, after hours	$ 120.00	**$ 120.00**
Under $60,000	3	Hour	Journeymen/Experienced Worker, regular hours worked	$ 90.00	**$ 95.77**
Under $60,000	4	Hour	Journeymen/Experienced Worker, after hours worked	$ 110.00	**$ 117.05**
Under $60,000	5	Hour	Laborer, regular hours worked	$ 75.00	**$ 78.81**
Under $60,000	6	Hour	Laborer, after hours worked	$ 95.00	**$ 99.83**
Over $60,000	7	Hour	Superintendent, regular hours	$ 105.00	**$ 100.00**
Over $60,000	8	Hour	Superintendent, after hours	$ 120.00	**$ 115.00**
Over $60,000	9	Hour	Journeymen/Experienced Worker, regular hours worked	$ 90.00	**$ 95.77**
Over $60,000	10	Hour	Journeymen/Experienced Worker, after hours worked	$ 110.00	**$ 117.05**
Over $60,000	11	Hour	Laborer, regular hours worked	$ 75.00	**$ 78.81**
Over $60,000	12	Hour	Laborer, after hours worked	$ 95.00	**$ 99.83**
All Projects	13	Hour	Diagnosis, project estimates, troubleshooting	$ 90.00	**$ 95.77**
All Projects	14	%	Discount of all parts	0%	**0%**
All Projects	15	Day	Daily per diem rate for overnight stay as needed including dinner & breakfast per person	$ 175.00	**$ 175.00**
All Projects	16	Mile	One way per mile cost, per vehicle	$ 0.66	**$ 0.66**

Certificate Of Completion

Envelope Id: F7054613-D4F6-4F51-88B2-8AAEDECCAACE
Status: Completed
Subject: Please DocuSign: SPD SPA 40-00000-23-00034 A002
Source Envelope:
Document Pages: 2
Signatures: 1
Certificate Pages: 5
Initials: 2
AutoNav: Enabled
EnvelopeId Stamping: Enabled
Time Zone: (UTC-07:00) Mountain Time (US & Canada)

Envelope Originator:
Yvette Anaya
1100 S Saint Francis Dr
Santa Fe, NM 87502
yvette.anaya@gsd.nm.gov
IP Address: 164.64.62.10

Record Tracking

Status: Original
12/26/2024 9:17:13 AM
Holder: Yvette Anaya
yvette.anaya@gsd.nm.gov
Location: DocuSign

Security Appliance Status: Connected
Pool: StateLocal

Storage Appliance Status: Connected
Pool: General Services Department
Location: DocuSign

Signer Events	Signature	Timestamp
Michael Saavedra michael.saavedra@gsd.nm.gov IT and Const. Bureau Chief New Mexico General Services Security Level: Email, Account Authentication (None) **Electronic Record and Signature Disclosure:** Accepted: 6/4/2020 11:04:51 AM ID: 9cac1b3e-4279-4c8f-b2b4-c607ea9821d8	MS Signature Adoption: Pre-selected Style Using IP Address: 164.64.62.10	Sent: 12/26/2024 9:18:36 AM Viewed: 12/26/2024 9:22:41 AM Signed: 12/26/2024 9:22:54 AM
Yvette Anaya yvette.anaya@gsd.nm.gov Executive Procurement Officer New Mexico General Services Security Level: Email, Account Authentication (None) **Electronic Record and Signature Disclosure:** Not Offered via DocuSign	ya Signature Adoption: Pre-selected Style Using IP Address: 164.64.62.10	Sent: 12/26/2024 9:22:55 AM Viewed: 12/26/2024 9:23:48 AM Signed: 12/26/2024 9:23:53 AM
Dorothy Mendonca dorothy.mendonca@gsd.nm.gov SPD Division Director / State Purchasing Agent General Services Department Signing Group: 35000 - State Purchasing Agent Security Level: Email, Account Authentication (None) **Electronic Record and Signature Disclosure:** Accepted: 4/14/2023 7:24:59 AM ID: 51f6380f-50f7-4227-afb5-572b373dfb7c	Dorothy Mendonca Signature Adoption: Pre-selected Style Using IP Address: 98.60.107.202 Signed using mobile	Sent: 12/26/2024 9:23:54 AM Resent: 12/26/2024 12:27:24 PM Resent: 12/26/2024 1:29:33 PM Viewed: 12/26/2024 2:08:42 PM Signed: 12/26/2024 2:08:49 PM

In Person Signer Events	Signature	Timestamp

Editor Delivery Events	Status	Timestamp

Agent Delivery Events	Status	Timestamp

Intermediary Delivery Events	Status	Timestamp

Certified Delivery Events	Status	Timestamp

Carbon Copy Events	Status	Timestamp

Witness Events	Signature	Timestamp

Notary Events	Signature	Timestamp

Envelope Summary Events	Status	Timestamps
Envelope Sent	Hashed/Encrypted	12/26/2024 9:18:36 AM
Certified Delivered	Security Checked	12/26/2024 2:08:42 PM
Signing Complete	Security Checked	12/26/2024 2:08:49 PM
Completed	Security Checked	12/26/2024 2:08:49 PM

Payment Events	Status	Timestamps

Electronic Record and Signature Disclosure

ELECTRONIC RECORD AND SIGNATURE DISCLOSURE

A. ELECTRONIC RECORD AND SIGNATURE DISCLOSURE (ERSD)

From time to time, New Mexico General Services Department (GSD), on behalf of the State of New Mexico (SONM), may be required by law to provide you with certain written notices or disclosures. Stated below are the terms and conditions for GSD's providing you such notices and disclosures electronically through the DocuSign system. Please read this information carefully. If you are able to access this information electronically and agree to **this Electronic Record and Signature Disclosure (ERSD)**, please confirm your agreement by selecting the check-box next to "I agree to use electronic records and signatures" before clicking "CONTINUE" within the DocuSign system.

B. Obtaining paper copies

At any time up to twenty (20) calendar days following your use of DocuSign to electronically sign a document, you may request a paper copy of any record provided or made available electronically to you by GSD. You will have the ability to download and print documents SONM sends you through the DocuSign system during and immediately after the signing session and, if you elect to create a DocuSign account, you may access the documents for a twenty (20) calendar day period after such documents are first sent to you. Following the twenty (20) day period, if you want GSD to send you paper copies of any such documents from GSD's office, you will be charged a $1.00 per-page fee plus postage. You may request delivery of such paper copies from GSD by following the procedure stated in Section H, below.

C. Withdrawing your consent

If you decide to receive notices and disclosures from GSD electronically, you may at any time change your mind and inform GSD you want to receive required notices and disclosures only in paper format. The procedure concerning how you may inform GSD of your decision to receive future notices and disclosures in paper format as well as withdraw your consent to receive notices and disclosures electronically is stated in Section D, immediately below.

D. Consequences of changing your mind

If you elect to receive required notices and disclosures only in paper format, it will slow the speed with which GSD will be able to complete certain steps in specific transactions and deliver paper copies to you. GSD will need: (1) to send the required notices or disclosures to you in paper format; and (2) wait until GSD receives your acknowledgment of your receipt of such paper notices or disclosures. Further, you will no longer be able to use the DocuSign system to receive required notices and consents electronically from SONM or to electronically sign documents generated and sent to you from SONM.

E. All notices and disclosures will be sent to you electronically

Unless you inform GSD otherwise according to these procedures, GSD will electronically provide you through the DocuSign system all required notices, disclosures, authorizations, acknowledgements and other documents that are required to be provided or made available to you during the course of your electronic signature relationship with SONM. To reduce the possibility of inadvertent non-receipt, GSD prefers to provide all required notices and disclosures by the same method and to the same email or physical address that you furnish to GSD. Thus, you may receive the disclosures and notices electronically or in paper form. If you do not agree with this procedure, please inform GSD according to the procedures stated in Section I, below. Please also refer to Section D, immediately above, which states the consequences resulting from your declination of electronic delivery of notices and disclosures.

F. How to contact GSD:

You may inform General Services Department (GSD) of any changes you select regarding State Purchasing Division's (SPD) electronic communications with you, to request paper copies of certain information from SPD, and to withdraw your prior consent to receive notices and disclosures electronically by emailing your request(s) to SPD at: *GSD.SPDinfo@state.nm.us*

G. To advise SPD of your new email address

To inform SPD of a change in the email address to which SPD sends you notices and disclosures electronically, you must send an email to SPD at *GSD.SPDinfo@state.nm.us* and in the body of such request you must include your previous and new email addresses.

H. To request paper copies from SPD

To request delivery of paper copies of electronic notices and disclosures that DocuSign and/or SPD have previously provided to you, you must send an email to SPD at *GSD.SPDinfo@state.nm.us* and in the body of your email request state your email address, full name, mailing address, and telephone number. SPD will charge you a $1.00 per page copy fee plus postage.

I. To withdraw your consent with SPD

To inform SPD that you no longer wish to receive notices and disclosures in electronic format you may:

(1) Decline to sign a document from within a signing session, and on the subsequent page, select the check-box indicating you wish to withdraw your consent, or you may:

(2) Send SPD an email to *GSD.SPDinfo@state.nm.us* and in the body of your request state your email address, full name, mailing address, and telephone number.

J. Required hardware and software

The minimum system requirements for using the DocuSign system may change over time. The current DocuSign system requirements may be found at:
https://support.docusign.com/guides/signer-guide-signing-system-requirements

K. Acknowledging your access and consent to receive and sign documents electronically

To confirm that you are able to electronically access the information contained in this Electronic Record and Signature Disclosure (ERSD), please confirm that you have: (1) read this ERSD, and either: (2) you are able to print on paper or electronically save this ERSD for your future reference and access; or (3) you are able to email this ERSD to an email address where you will be able to print this ERSD on paper and/or save this ERSD for your future reference and access. Further, if you consent to receiving notices and disclosures from DocuSign and/or SPD exclusively in electronic format, then select the check-box next to "I agree to use electronic records and signatures," before you click "CONTINUE" within the DocuSign system.

By selecting the check-box next to "I agree to use electronic records and signatures," you confirm that:

- You have read this Electronic Record and Signature Disclosure (ERSD); and
- You can print this ERSD on paper, or you can save and/ or send this ERSD to a location where you can print this ERSD, for your future reference and access; and
- Until or unless you notify SPD as stated in this ERSD, you consent to exclusively receive through electronic means all notices, disclosures, authorizations, acknowledgements, and other documents that are required to be provided or made available to you by SPD during the course of your electronic signature relationship with SPD.

DocuSign Envelope ID: E0365BB0-9F8D-4B71-AA3D-06C8EEDCCDE7

State of New Mexico
General Services Department
Purchasing Division

Statewide Price Agreement Amendment

Awarded Vendor: **2 Vendors**

Number: **40-00000-23-00034**

Amendment No.: **One**

Term: **December 29, 2023 – December 28, 2024**

Ship To: **All State of New Mexico agencies, commissions, institutions, political subdivisions and local public bodies allowed by law.**
Invoice: **As Requested at Time of Order**

Procurement Specialist: **Tami Concha** JC

Telephone No.: **(505) 660-3671**

Email: **Tami.Concha@gsd.nm.gov**

Title: **General Construction Services**

This amendment is to be attached to the respective Price Agreement and become a part thereof.

To include Vendor ID Numbers for Vendors (BK) 0000177821 S&G Construction, LLC and (BP) 0000178262 Villalobos Builders, LLC.

Except as modified by this amendment, the provisions of the Price Agreement shall remain in full force and effect.

Accepted for the State of New Mexico

Dorothy Mendonca

Date: 3/27/2024

Dorothy Mendonca
New Mexico State Purchasing Agent

DocuSign

Certificate Of Completion

Envelope Id: E0365BB09F8D4B71AA3D06C8EEDCCDE7
Status: Completed
Subject: Please DocuSign: 40-00000-23-00034 General Construction A001
Source Envelope:
Document Pages: 1
Signatures: 1
Envelope Originator:
Certificate Pages: 5
Initials: 2
Tami Concha
AutoNav: Enabled
1100 S Saint Francis Dr
EnvelopeId Stamping: Enabled
Santa Fe, NM 87502
Time Zone: (UTC-07:00) Mountain Time (US & Canada)
Tami.Concha@gsd.nm.gov
IP Address: 164.64.62.10

Record Tracking

Status: Original
3/27/2024 1:49:34 PM
Holder: Tami Concha
Tami.Concha@gsd.nm.gov
Location: DocuSign
Security Appliance Status: Connected
Pool: StateLocal
Storage Appliance Status: Connected
Pool: GSD
Location: DocuSign

Signer Events	Signature	Timestamp
Michael Saavedra Michael.Saavedra@gsd.nm.gov IT and Const. Bureau Chief New Mexico General Services Security Level: Email, Account Authentication (None), Login with SSO **Electronic Record and Signature Disclosure:** Accepted: 6/4/2020 11:04:51 AM ID: 9cac1b3e-4279-4c8f-b2b4-c607ea9821d8	 Signature Adoption: Pre-selected Style Using IP Address: 164.64.62.10	Sent: 3/27/2024 1:51:09 PM Viewed: 3/27/2024 1:51:34 PM Signed: 3/27/2024 1:51:46 PM
Tami Concha tami.concha@gsd.nm.gov Const. Supervisor New Mexico General Services, State Purchasing Division Security Level: Email, Account Authentication (None) **Electronic Record and Signature Disclosure:** Not Offered via DocuSign	 Signature Adoption: Pre-selected Style Using IP Address: 164.64.62.10	Sent: 3/27/2024 1:51:47 PM Viewed: 3/27/2024 1:52:02 PM Signed: 3/27/2024 1:52:07 PM
Dorothy Mendonca dorothy.mendonca@gsd.nm.gov SPD Division Director / State Purchasing Agent General Services Department Signing Group: 35000 - State Purchasing Agent Security Level: Email, Account Authentication (None) **Electronic Record and Signature Disclosure:** Accepted: 4/14/2023 7:24:59 AM ID: 51f6380f-50f7-4227-afb5-572b373dfb7c	 Signature Adoption: Pre-selected Style Using IP Address: 164.64.62.10	Sent: 3/27/2024 1:52:08 PM Viewed: 3/27/2024 1:54:18 PM Signed: 3/27/2024 1:54:22 PM

In Person Signer Events	Signature	Timestamp

Editor Delivery Events	Status	Timestamp

Agent Delivery Events	Status	Timestamp

Intermediary Delivery Events	Status	Timestamp

Certified Delivery Events	Status	Timestamp

Carbon Copy Events	Status	Timestamp

Witness Events	Signature	Timestamp

Notary Events	Signature	Timestamp

Envelope Summary Events	Status	Timestamps
Envelope Sent	Hashed/Encrypted	3/27/2024 1:51:09 PM
Certified Delivered	Security Checked	3/27/2024 1:54:18 PM
Signing Complete	Security Checked	3/27/2024 1:54:22 PM
Completed	Security Checked	3/27/2024 1:54:22 PM

Payment Events	Status	Timestamps

Electronic Record and Signature Disclosure

ELECTRONIC RECORD AND SIGNATURE DISCLOSURE

A. ELECTRONIC RECORD AND SIGNATURE DISCLOSURE (ERSD)

From time to time, New Mexico General Services Department (GSD), on behalf of the State of New Mexico (SONM), may be required by law to provide you with certain written notices or disclosures. Stated below are the terms and conditions for GSD's providing you such notices and disclosures electronically through the DocuSign system. Please read this information carefully. If you are able to access this information electronically and agree to **this Electronic Record and Signature Disclosure (ERSD)**, please confirm your agreement by selecting the check-box next to "I agree to use electronic records and signatures" before clicking "CONTINUE" within the DocuSign system.

B. Obtaining paper copies

At any time up to twenty (20) calendar days following your use of DocuSign to electronically sign a document, you may request a paper copy of any record provided or made available electronically to you by GSD. You will have the ability to download and print documents SONM sends you through the DocuSign system during and immediately after the signing session and, if you elect to create a DocuSign account, you may access the documents for a twenty (20) calendar day period after such documents are first sent to you. Following the twenty (20) day period, if you want GSD to send you paper copies of any such documents from GSD's office, you will be charged a $1.00 per-page fee plus postage. You may request delivery of such paper copies from GSD by following the procedure stated in Section H, below.

C. Withdrawing your consent

If you decide to receive notices and disclosures from GSD electronically, you may at any time change your mind and inform GSD you want to receive required notices and disclosures only in paper format. The procedure concerning how you may inform GSD of your decision to receive future notices and disclosures in paper format as well as withdraw your consent to receive notices and disclosures electronically is stated in Section D, immediately below.

D. Consequences of changing your mind

If you elect to receive required notices and disclosures only in paper format, it will slow the speed with which GSD will be able to complete certain steps in specific transactions and deliver paper copies to you. GSD will need: (1) to send the required notices or disclosures to you in paper format; and (2) wait until GSD receives your acknowledgment of your receipt of such paper notices or disclosures. Further, you will no longer be able to use the DocuSign system to receive required notices and consents electronically from SONM or to electronically sign documents generated and sent to you from SONM.

E. All notices and disclosures will be sent to you electronically

Unless you inform GSD otherwise according to these procedures, GSD will electronically provide you through the DocuSign system all required notices, disclosures, authorizations, acknowledgements and other documents that are required to be provided or made available to you during the course of your electronic signature relationship with SONM. To reduce the possibility of inadvertent non-receipt, GSD prefers to provide all required notices and disclosures by the same method and to the same email or physical address that you furnish to GSD. Thus, you may receive the disclosures and notices electronically or in paper form. If you do not agree with this procedure, please inform GSD according to the procedures stated in Section I, below. Please also refer to Section D, immediately above, which states the consequences resulting from your declination of electronic delivery of notices and disclosures.

F. How to contact GSD:

You may inform General Services Department (GSD) of any changes you select regarding State Purchasing Division's (SPD) electronic communications with you, to request paper copies of certain information from SPD, and to withdraw your prior consent to receive notices and disclosures electronically by emailing your request(s) to SPD at: *GSD.SPDinfo@state.nm.us*

G. To advise SPD of your new email address

To inform SPD of a change in the email address to which SPD sends you notices and disclosures electronically, you must send an email to SPD at *GSD.SPDinfo@state.nm.us* and in the body of such request you must include your previous and new email addresses.

H. To request paper copies from SPD

To request delivery of paper copies of electronic notices and disclosures that DocuSign and/or SPD have previously provided to you, you must send an email to SPD at *GSD.SPDinfo@state.nm.us* and in the body of your email request state your email address, full name, mailing address, and telephone number. SPD will charge you a $1.00 per page copy fee plus postage.

I. To withdraw your consent with SPD

To inform SPD that you no longer wish to receive notices and disclosures in electronic format you may:

(1) Decline to sign a document from within a signing session, and on the subsequent page, select the check-box indicating you wish to withdraw your consent, or you may:

(2) Send SPD an email to *GSD.SPDinfo@state.nm.us* and in the body of your request state your email address, full name, mailing address, and telephone number.

J. Required hardware and software

The minimum system requirements for using the DocuSign system may change over time. The current DocuSign system requirements may be found at:
https://support.docusign.com/guides/signer-guide-signing-system-requirements

K. Acknowledging your access and consent to receive and sign documents electronically

To confirm that you are able to electronically access the information contained in this Electronic Record and Signature Disclosure (ERSD), please confirm that you have: (1) read this ERSD, and either: (2) you are able to print on paper or electronically save this ERSD for your future reference and access; or (3) you are able to email this ERSD to an email address where you will be able to print this ERSD on paper and/or save this ERSD for your future reference and access. Further, if you consent to receiving notices and disclosures from DocuSign and/or SPD exclusively in electronic format, then select the check-box next to "I agree to use electronic records and signatures," before you click "CONTINUE" within the DocuSign system.

By selecting the check-box next to "I agree to use electronic records and signatures," you confirm that:

- You have read this Electronic Record and Signature Disclosure (ERSD); and
- You can print this ERSD on paper, or you can save and/ or send this ERSD to a location where you can print this ERSD, for your future reference and access; and
- Until or unless you notify SPD as stated in this ERSD, you consent to exclusively receive through electronic means all notices, disclosures, authorizations, acknowledgements, and other documents that are required to be provided or made available to you by SPD during the course of your electronic signature relationship with SPD.

DocuSign Envelope ID: 9C0D0BCE-1F94-4323-9C4D-6BA4D233D2D9

State of New Mexico
General Services Department

Statewide Price Agreement

Awarded Vendor:
51 Awarded Vendors, See Pages 6-14 for Detail

Ship To:
All State of New Mexico agencies, commissions, institutions, political subdivisions and local public bodies allowed by law.

Invoice:
As Requested at Time of Order

Price Agreement Number: **40-00000-23-00034**

Payment Terms: **Net 30**

F.O.B.: **Destination**

Delivery: **As Requested**

JC

Procurement Specialist: **Tami Concha**

Telephone No.: **(505) 660-3671**

Email: **Tami.Concha@gsd.nm.gov**

Title: **General Construction Services**

Term: **December 29, 2023 thru December 28, 2024**

This Statewide Price Agreement is made subject to the "terms and conditions" as indicated on subsequent pages.

Accepted for the State of New Mexico

Natalie Martinez

Date: 12/29/2023

Dorothy Mendonca
New Mexico State Purchasing Agent

x **This Agreement was signed on behalf of the State Purchasing Agent**

MS

DocuSign Envelope ID: 9C0D0BCE-1F94-4323-9C4D-6BA4D233D2D9

Terms and Conditions

(Unless otherwise specified)

1. **General:** When the State Purchasing Agent or his/her designee issues a purchase document in response to the Vendor's bid, a binding contract is created.

2. **Variation in Quantity:** No variation in the quantity of any item called for by this order will be accepted unless such variation has been caused by conditions of loading, shipping, packing or allowances in manufacturing process and then only to the extent, if any, specified in this order.

3. **Assignment:**

a. Neither the order, nor any interest therein, nor any claim thereunder, shall be assigned or transferred by the Vendor, except as set forth in Subparagraph 3b or as expressly authorized in writing by the State Purchasing Agent or his/her designee. No such assignment or transfer shall relieve the Vendor from the obligations and liabilities under this order.

b. Vendor agrees that any and all claims for overcharge resulting from antitrust violations which are borne by the State as to goods, services, and materials purchased in connection with this bid are hereby assigned to the State.

4. **State Furnished Property:** State furnished property shall be returned to the State upon request in the same condition as received except for ordinary wear, tear and modifications ordered hereunder.

5. **Discounts:** Prompt payment discounts will not be considered in computing the low bid.

6. **Inspection:** Final inspection and acceptance will be made at the destination. Supplies rejected at the destination for nonconformance with specifications shall be removed at the Vendor's risk and expense, promptly after notice of rejection.

7. **Inspection of Plant:** The State Purchasing Agent or his/her designee may inspect, at any reasonable time, the part of the Contractor's, or any subcontractor's plant or place of business, which is related to the performance of this contract.

8. **Commercial Warranty:** The Vendor agrees that the supplies or services furnished under this order shall be covered by the most favorable commercial warranties the Vendor gives for such to any customer for such supplies or services. The rights and remedies provided herein shall extend to the State and are in addition to and do not limit any rights afforded to the State by any other clause of this order. **Vendor agrees not to disclaim warranties of fitness for a particular purpose of merchantability.**

9. **Taxes:** The unit price shall exclude all state taxes.

10. **Packing, Shipping and Invoicing:**

a. The State's purchasing document number and the Vendor's name, user's name and location shall be shown on each packing and delivery ticket, package, bill of lading and other correspondence in connection with the shipments. The user's count will be accepted by the Vendor as final and conclusive on all shipments not accompanied by a packing ticket.

b. The Vendor's invoice shall be submitted duly certified and shall contain the following information: order number, description of supplies or services, quantities, unit price and extended totals. Separate invoices shall be rendered for each and every complete shipment.

c. Invoices must be submitted to the using agency and NOT the State Purchasing Agent.

11. **Default:** The State reserves the right to cancel all or any part of this order without cost to the State, if the Vendor fails to meet the provisions of this order and, except as otherwise provided herein, to hold the Vendor liable for any excess cost occasioned by the State due to the Vendor's default. The Vendor shall not be liable for any excess costs if failure to perform the order arises out of causes beyond the control and without the fault or negligence of the Vendor, such causes include but are not restricted to, acts of God or the public enemy, acts of the State or Federal Government, fires, floods, epidemics, quarantine restrictions, strikes, freight embargoes, unusually severe weather and defaults of subcontractors due to any of the above, unless the State shall determine that the supplies or services to be furnished by

DocuSign Envelope ID: 9C0D0BCE-1F94-4323-9C4D-6BA4D233D2D9

the subcontractor were obtainable from other sources in sufficient time to permit the Vendor to meet the required delivery scheduled. The rights of the State provided in this paragraph shall not be exclusive and are in addition to any other rights now being provided by law or under this order.

12. **Non-Collusion:** In signing this bid the Vendor certifies he/she has not, either directly or indirectly, entered into action in restraint of free competitive bidding in connection with this offer submitted to the State Purchasing Agent or his/her designee.

13. **Nondiscrimination:** Vendor doing business with the State of New Mexico must be in compliance with the Federal Civil Rights Act of 1964 and Title VII of the Act (Rev. 1979) and the Americans with Disabilities Act of 1990 (Public Law 101-336).

14. **The Procurement Code:** Sections 13-1-28 through 13-1-199 NMSA 1978, imposes civil and criminal penalties for its violation. In addition the New Mexico criminal statutes impose felony penalties for bribes, gratuities and kickbacks.

15. **Items:** All bid items are to be NEW and of most current production, unless otherwise specified.

16. **Payment for Purchases:** Except as otherwise agreed to: late payment charges may be assessed against the user state agency in the amount and under the conditions set forth in Section 13-1-158 NMSA 1978.

17. **Workers' Compensation:** The Contractor agrees to comply with state laws and rules pertaining to Workers' Compensation benefits for its employees. If the Contractor fails to comply with Workers' Compensation Act and applicable rules when required to do so, this Agreement may be terminated by the contracting agency.

18. **Submission of Bid:** Bids must be submitted in a sealed envelope with the bid number and opening date clearly indicated on the bottom left hand side of the front of the envelope. Failure to label bid envelope will necessitate the premature opening of the bid in order to identify the bid number.

19. **Contractor Personnel**: Personnel proposed in the Contractor's written bid to the Procuring Agency are considered material to any work performed under this Price Agreement. Once a Purchase Order or contract has been executed, no changes of personnel will be made by the Contractor without prior written consent of the Procuring Agency. Replacement of any Contractor personnel, if approved, shall be with personnel of equal ability, experience, and qualifications. The Contractor will be responsible for any expenses incurred in familiarizing the replacement personnel to insure their being productive to the project immediately upon receiving assignments. Approval of replacement personnel shall not be unreasonably withheld. The Procuring Agency shall retain the right to request the removal of any of the Contractor's personnel at any time.

20. **Subcontracting:** The Contractor shall not subcontract any portion of the Price Agreement without the prior written approval of the Procuring Agency. No such subcontracting shall relieve the Contractor from its obligations and liabilities under this Price Agreement, nor shall any subcontracting obligate payment from the Agency.

21. **Records and Audit:** The Contractor shall maintain detailed time and expenditure records that indicate the date, time, nature, and cost of services rendered during this Price Agreement's term and effect, and retain them for a period of three (3) years from the date of final payment under this Price Agreement. The records shall be subject to inspection by the Agency, State Purchasing Division, Department of Finance and Administration, and for Information Technology contracts, State Chief Information Officer. The Agency shall have the right to audit billings, both before and after payment. Payment for services under this Price Agreement shall not foreclose the right of the Agency to recover excessive or illegal payments.

22. **Subcontracts:** The foregoing requirements for Contractor Personnel, Subcontracting, and Audit shall be inserted into all subcontracts from the prime contractor to the subcontractor.

New Mexico Employees Health Coverage

A. If Contractor has, or grows to, six (6) or more employees who work, or who are expected to work, an average of at least 20 hours per week over a six (6) month period during the term of the contract, Contractor certifies, by signing this agreement, to have in place, and agrees to maintain for the term of the contract, health insurance for its New Mexico

DocuSign Envelope ID: 9C0D0BCE-1F94-4323-9C4D-6BA4D233D2D9

Employees and offer that health insurance to its New Mexico Employees if the expected annual value in the aggregate of any and all contracts between Contractor and the State exceeds $250,000 dollars.

B. Contractor agrees to maintain a record of the number of its New Mexico Employees who have (a) accepted health insurance; (b) declined health insurance due to other health insurance coverage already in place; or (c) declined health insurance for other reasons. These records are subject to review and audit by a representative of the state.

C. Contractor agrees to advise all of its New Mexico Employees of the availability of State publicly financed health care coverage programs by providing each of its New Mexico Employees with, as a minimum, the following web site link to additional information: https://bewellnm.com.

D. For purposes of this Paragraph, the following terms have the following meanings:

(1) "New Mexico Employee" means any resident of the State of New Mexico employed by Contractor who performs the majority of the employee's work for Contractor within the State of New Mexico, regardless of the location of Contractor's office or offices; and

(2) "offer" means to make available, without unreasonable restriction, enrollment in one or more health coverage plans and to actively seek and encourage participation in order to achieve the goals of Executive Order 2007-049. This could include State publicly financed public health coverage programs such as *Insure New Mexico!*

Statewide Price Agreement

Article I – Statement of Work
Under the terms and conditions of this Price Agreement all State of New Mexico agencies, commissions, institutions, political subdivisions and local public bodies allowed by law may issue orders for items and/or services described herein. The terms and conditions of this Price Agreement shall form a part of each order issued hereunder.

The items and/or services to be ordered shall be as listed under Article IX - Price Schedule. All orders issued hereunder will bear both an order number and this Price Agreement number. It is understood that no guarantee or warranty is made or implied by the New Mexico State Purchasing Agent, his/her designee or the user that any order for any definite quantity will be issued under this Price Agreement. The Contractor is required to accept the order and furnish the items and/or services in accordance with the articles contained hereunder for the quantity of each order.

Article II – Term
The term of this Price Agreement, for issuance of orders, shall be as indicated in the specifications.

Article III – Specifications
Items and/or services furnished hereunder shall conform to the requirements of specifications and/or drawings applicable to items listed under Article IX-Price Schedule. Orders issued against this schedule will show the applicable Price Agreement item(s), number(s), and price(s); however they may not describe the item(s) fully.

Article IV – Shipping and Billing Instructions
Contractor shall ship in accordance with the following instructions: Shipment shall be made only against specific orders which the user may place with the Contractor during the term; The Contractor shall enclose a packing list with each shipment listing the order number, price agreement number and the commercial parts number (if any) for each item; Delivery shall be made as indicated on page1. If vendor is unable to meet stated delivery the State Purchasing Agent or his/her designee must be notified.

Article V – Termination
The Agency may terminate this Agreement for convenience or cause. The Contractor may only terminate this Agreement based upon the Agency's uncured, material breach of this Agreement. Contractor shall give Agency written notice of termination at least thirty (30) days prior to the intended date of termination, which notice shall (i) identify all the Agency's material breaches of this Agreement upon which the termination is based and (ii) state what the Agency must do to cure such material breaches. Contractor's notice of termination shall only be effective (i) if the Agency does not cure all material breaches within the thirty (30) day notice period or (ii) in the case of material breaches that cannot be cured within thirty (30) days, the Agency does not, within the thirty (30) day notice period, notify the Contractor of its intent to cure and begin with

DocuSign Envelope ID: 9C0D0BCE-1F94-4323-9C4D-6BA4D233D2D9

due diligence to cure the material breach. Termination of this Contract, however, shall not affect any outstanding orders. This provision is not exclusive and shall not waive other rights and remedies afforded either party in the event of breach of contract or default. In such instances the contract may be cancelled effective immediately.

Article VI – Amendment
This Price Agreement may be amended by mutual agreement of the New Mexico State Purchasing Agent or his/her designee and the Contractor upon written notice by either party to the other. An amendment to this Price Agreement shall not affect any outstanding orders issued prior to the effective date of the amendment as mutually agreed upon, and as published by the New Mexico State Purchasing Agent or his/her designee. Amendments affecting price adjustments and/or the extension of a price agreement expiration date are not allowed unless specifically provided in the bid and price agreement specifications.

Article VII – Indemnity Clause
Contractor shall indemnify and hold harmless the State, its officers and employees, against liability, claims, damages, losses or expenses arising out of bodily injury to persons or damage to properties caused by, or resulting from Contractor's, and/or its employees, own negligent act or omission while Contractor, and/or its employees, perform or fails to perform its obligations and duties under the Terms and Conditions of this agreement. This save harmless and indemnification clause is subject to the immunities, provisions, and limitations of the Tort Claims Act (Section 41-4-1, et seq., N.M.S.A. 1978 comp. and Section 57-7-1 N.M.S.A. 1878 comp. and any amendments thereto.

It is specifically agreed between the parties executing this agreement that it is not intended by any of the provisions of any part of the agreement to create in the public or any member thereof a third party beneficiary or to authorize anyone not a party to the agreement to maintain a suit(s) for wrongful death(s), bodily and/ or personal injury(s) to person(s), damage(s) to property(ies) and/or any other claim(s) whatsoever pursuant to the provisions of this agreement.
Vendor shall provide all insurance necessary to employees on the work site, including but not limited to Worker's Compensation.

Article VIII – Issuance or Orders
Only written signed orders are valid under this Price Agreement.

Article IX – Packing (if applicable)
Packing shall be in conformance with standard commercial practices.

Article X – Price Schedule
Prices as listed in the price schedule hereto attached are firm.

DocuSign Envelope ID: 9C0D0BCE-1F94-4323-9C4D-6BA4D233D2D9

Awarded Vendors:

(AA) 0000073450
3 B Builders, Inc.
1770 Hamilton Ln
Bosque Farms, NM 87068
Matthew Budagher (505) 553-0544
matt.3bbuilders@gmail.com

Payment Term: Net 30
Delivery: As Requested
Public Works: 3039120140518
License: 352730

(AB) 0000053415
Advanced Environmental Solutions, Inc.
2318 Roldan Drive
Belen, New Mexico 87002
Andy Saiz (505) 450-8953
asaiz@aesnm.com

Payment Term: Net 30 Days
Delivery: Per Contract Specs
Public Works: 74620050716
License: 83422

(AC) 0000107401
All Rite Construction, Inc.
dba RiteCon
PO Box 67904
Albuquerque, NM 87193
Meshach Alvarado (505) 344-7663
meschach@ritecon.com

Payment Term: Net 30
Delivery: FOB
Public Works: 3057620140914
License: 82136

(AD) 0000009253
Allied Electric, Inc.
PO Box 28430
Santa Fe, NM 87592-8430
George Maestas (505) 660-1327
george@alliednm.com

Payment Term: Net 30
Delivery: As Requested by owner
Public Works: 1365320100416
License: 351269

(AE) 0000054601
AnchorBuilt, Inc.
PO Box 27688
Albuquerque, NM 87125
Raymond Zamora 505.342.2452
ray.zamora@anchorbuilt.com

Payment Term: Net 30
Delivery: Destination
Public Works: 2492520120713
License: 81458

DocuSign Envelope ID: 9C0D0BCE-1F94-4323-9C4D-6BA4D233D2D9

(AF) 0000046277
B & D Industries, Inc.
PO Box 561617
Denver, CO 80256
Jamie Westerfield 505-332-9841
jwesterfield@banddindustries.com

Payment Term: Net 30
Delivery: F.O.B. Destination
Public Works: 191702011629
License: 1426

(AG) 0000083208
Boyd Construction, LLC
1000 Cordova Pl. #987
Santa Fe, NM 87505
Lawrence Boyd 505 699-4787
Lboyd1888@aol.com

Payment Term: Net 30
Delivery: 1000 Cordova Pl 987 Santa Fe, NM 87505
Public Works: 26114334852023
License: 411057

(AH) 0000051994
Classic Industries, Inc.
P.O. Box 434
Dona Ana, NM 88032
Richard J. Lara 575-523-2053
office@classicindincnm.com

Payment Term: Net 30
Delivery: As requested per requirements per award
Public Works: 897720090125
License: 55595

(AI) 0000174779
Colt Builders, Inc.
5304 Raton HWY
Des Moines, New Mexico 88418
Lonnie Cruz 505-850-3312
lonnie@coltbuildersinc.com

Payment Term: Net 30
Delivery: Destination
Public Works: 28141371662017
License: 92919

(AJ) 0000138100
Consolidated Builders of NM, LLC
PO Box 26785
Albuquerque, NM 87125
Manuel Apodaca 505 873 6139
consolidatedbuilders@comcast.net

Payment Term: Net 30
Delivery: 116 Veranda Rd NW
Albuquerque, NM 87107
Public Works: 2548820121019
License: 59613

(AK) 0000170527
Cordova Contracting & Development, LLC
7411 Hancock Ct. NE
Albuquerque, NM 87109
Mark A. Cordova (505) 243-9675
purchasing@cordovallc.com

Payment Term: Net 30
Delivery: As requested.
Public Works: 25224592712018
License: 85391

DocuSign Envelope ID: 9C0D0BCE-1F94-4323-9C4D-6BA4D233D2D9

(AL) 0000116075
Davenport Construction Management LLC
141 Camino de las Crucitas
Santa Fe NM 87501
Mitchel Davenport 505-660-7105
mitch@dcmnm.com

Payment Term: Net 30
Delivery: 3201 Mercantile Court, Suite A
Santa Fe NM 87507
Public Works: 2901220130531
License: 369676

(AM) 0000170503
Elite Communications & Construction LLC
1950 Bosque Farms Blvd
Bosque Farms, NM 87068
Gabe Trujillo 505-295-8000
gabe@elitenm.com

Payment Term: Net 30
Delivery: As requested, job site, or yard location at
1950 Bosque Farms Blvd
Bosque Farms NM 87068
Public Works: 28148871042020
License: 391781

(AN) 0000049445
ESA Construction, Inc.
3435 Girard Blvd. NE
Albuquerque, NM 87107
Steven C. Pannell 505-884-2171 X102
spannell@esaconstruction.com

Payment Term: Net 30
Delivery: As required by contract or purchase order.
Public Works: 13420060701
License: 28493

(AO) 0000043596
First Mesa Construction, Inc.
PO Box 92258
Albuquerque, NM 87199-2258
Scott Butterbaugh (505) 250-1468
scott@firstmesa.net

Payment Term: Net 30
Delivery: As Requested
Public Works: 2545020121012
License: 59346

(AP) 0000086357
Four Winds Mechanical HTC/AC
8915 Adams ST NE, Suite B
Albuquerque, NM 87113
Chualing "Lynn" Armijo 505-908-0090
lynn@4windsmechanical.com

Payment Term: Net 30
Delivery: 24 hours
Public Works: 2885820130507
License: 82333

(AQ) 0000049692
Franken Construction Company, Inc.
1025 Douglas Avenue
Las Vegas, NM 87701
Brent Franken 505-429-1962
brentfranken@frankenconstruction.com

Payment Term: Net 30
Delivery: Contractors Yard or Jobsite Address
Public Works: 3045220140628
License: 7750

DocuSign Envelope ID: 9C0D0BCE-1F94-4323-9C4D-6BA4D233D2D9

(AR) 0000154826
Fulcrum Contracting LLC
5400 Sanban Drive
Las Cruces, NM 88005
Robert Macias 575-496-2802
robert@fulcrum-contracting.com

Payment Term: Net 30
Delivery: As Requested
Public Works: 28522410262020
License: 402807

(AS) 0000090285
GM Emulsion LLC
5935 Agua Fria Street,
Santa Fe, NM 87507
Fred Marquez 505-471-9981
fred@gmemulsion.com

Payment Term: Net 30
Delivery: As Requested
Public Works: 2461320120530
License: 370602

(AT) 0000141388
GME General Building LLC
3225 Richard's Lane Unit A
Santa Fe, New Mexico 87507
Erik Trujillo 505-690-7438
erik@gmegeneralbuilding.com

Payment Term: Net 30
Delivery: As Requested
Public Works: 28325764732018
License: 396923

(AU) 0000125463
Global Maven Enterprises, LLC
Po Box 2016
Las Cruces, NM 88004
Azzam Askar 575-571-7417
customerservice@gmellcusa.com

Payment Term: Net 30
Delivery: 1065 S. Main St. Building D Suite E
Las Cruces, NM 88005
Public Works: 1761920150824
License: 389804

(AV) 0000052470
HEI, Inc.
PO Box 31310
Albuquerque, New Mexico 87190
Jesse Luna 505-880-1819
jluna@heinm.com

Payment Term: Net 30
Delivery: F.O.B. Destination
Public Works: 2495720120723
License: 61439

(AW) 0000046616
Highland Enterprises, Inc.
PO Box 2409
Las Cruces, NM 88004
Mark Hettinga 575-524-3551
hei@highlandnm.com

Payment Term: Net 30
Delivery: As Requested
Public Works: 971920090606
License: 4460

DocuSign Envelope ID: 9C0D0BCE-1F94-4323-9C4D-6BA4D233D2D9

(AX) 0000127038
Illmatic Construction Inc.
520 Barela Lane
Santa Fe, NM 87505
Joann Sandoval 505-920-1951
illmatic505@gmail.com

Payment Term: Net 30
Delivery: as requested
Public Works: 21617625602016
License: 91673

(AY) 0000129254
JRM Construction Co, LLC
2620 Via Berrenda
Santa Fe, NM, 87505
Joe Robert Mendez Jr. 505-920-9768
jrmconstruction65@yahoo.com

Payment Term: Net 30
Delivery: FOB DESTINATION
Public Works: 28112303762022
License: 372261

(AZ) 0000167639
Jaypen Construction LLC
101 B Paseo Nopal
Santa Fe, NM 87507
Jeremy Martinez 505-920-0710
jeremy.jaypenconst@gmail.com

Payment Term: Net 30
Delivery: As Requested
Public Works: 28738509952022
License: 406984

(BA) 0000174921
L Martinez Construction LLC
P.O. Box 662
Santa Cruz, New Mexico 87567
Lionel Martinez (505) 614-6007
llmartinezconst@gmail.com

Payment Term: Net 30
Delivery: As Requested
Public Works: 29214840592023
License: 410900

(BB) 0000111171
LLR Construction, LLC
2015 Wyoming Blvd. NE Suite I
Albuquerque NM 87112
Doug Langley 505-850-4533
doug@llrconstructionnm.com

Payment Term: Net 30
Delivery: 2015 Wyoming Blvd. NE Suite I
Albuquerque NM 87112
Public Works: 3009120130927
License: 371032

(BC) 0000138553
Nine Degrees Construction, LLC
101 Maguey Ct. Suite 2
Sunland Park, NM 88063
Cesar Molina 915-526-8739
cesarm@nine-degrees.com

Payment Term: Net 30
Delivery: Same as remit address
Public Works: 24651036262017
License: 381568

DocuSign Envelope ID: 9C0D0BCE-1F94-4323-9C4D-6BA4D233D2D9

(BD) 0000049258
Northern Mountain Constructors, Inc.
PO Box 348
El Prado, NM 87529
Claire Moore 575-758-4395
claire@nmconstructors.com

Payment Term: Net 30
Delivery: as requested
Public Works: 3046520140706
License: 27983

(BE) 0000114869
Pluma, LLC
6301 4th St. NW Suite 1
Albuquerque, NM 87107
Kodi (505) 345-0755
kodi@plucys.com

Payment Term: Net 30
Delivery: As Requested
Public Works: 1755520150602
License: 387286

(BF) 0000148381
Prestigious Paving, LLC
2706 Chamisal Avenue
Gallup NM 87301
Zane Munoz 505-488-2333
prestigiouspaving@gmail.com

Payment Term: Net 30
Delivery: As Requested
Public Works: 28419195262022
License: 401665

(BG) 0000116761
Prime Builders, LLC
P.O. Box 91480
Albuquerque, NM 87199
Eric Peterson 505-924-0455
epeterson@primebuildersnm.com

Payment Term: Net 30
Delivery: As requested
Public Works: 2496820120723
License: 365323

(BH) 0000132517
R and M Construction, LLC
PO Box 1026
Alcalde, NM 87511
Robert Sanchez 505-927-2027
robert@rmconstructionnm.com

Payment Term: Net 30
Delivery: Email - robert@rmconstructionnm.com
Public Works: 2416920120330
License: 367912

(BI) 0000142264
Red Seven Electric LLC
PO Box 181
Jarales, NM 87023
Manuel Medina 505-859-5414
mmedina@redsevenelectric.com

Payment Term: Net 30
Delivery: As Requested
Public Works: 28211398962018
License: 391745

DocuSign Envelope ID: 9C0D0BCE-1F94-4323-9C4D-6BA4D233D2D9

(BJ) 0000135923
Road Runer Plaster & Drywall, LLC
3272 Ojos De Jo
Santa Fe, NM 87507
Alvaro Ivan Erives 505 670-3426
IvanRoadRunner@live.com

Payment Term: Net 30
Delivery: As requested
Public Works: 22733316402017
License: 367027

(BK) Not in SHARE
S&G Construction, LLC
21 Lumbre Del Sol
Espanola, NM 87532
Sukhwinder Singh 505-603-4969
swscfo@gmail.com

Payment Term: Net 30
Delivery: Job Order Contracting
Public Works: 29220605632023
License: 60248

(BL) 0000009789
SDV Construction, Inc.
8912 Adams St NE
Albuquerque, NM 87113
Paul Farless 505-883-3176
estimating@sdvconstruction.com

Payment Term: Net 30
Delivery: Destination
Public Works: 168920070104
License: 92744

(BM) 0000076453
Sanchez Demolition Inc.
PO Box 721
Bosque, NM 87006
Michael Lovato 505-864-7551
sanchezdemolition@gmail.com

Payment Term: Net 30 days from receipt of invoice
Delivery: 16 Miranda Rd. Veguita, NM 87062
Public Works: 1745120150208
License: 359736

(BN) 0000137030
Sweep Construction
4904 Jefferson St NE Suite E,
Albuquerque, New Mexico, 87109
Sara Petersen 505-881-1461
sweepconstruction@gmail.com

Payment Term: Net 30
Delivery: as requested
Public Works: 2255620110606
License: 369821

(BO) 0000170501
The Aisling Company, LLC
2327 State Rd. 1
Socorro, NM 87801
Casey A. Spurgin 505-871-1000
info@aislingco.com

Payment Term: 21 days after submission
Delivery: As Requested, Scheduled
Emergency response with 24-48 hrs.
Public Works: 28231792042019
License: 393602

DocuSign Envelope ID: 9C0D0BCE-1F94-4323-9C4D-6BA4D233D2D9

(BP) Not in SHARE
Villalobos Builders, LLC
4711 Grand Avenue NE
Albuquerque, NM 87108
Myra E Villalobos (505) 235-9293
villalobosbuildersllc@outlook.com

Payment Term: Net 30
Delivery: As requested
Public Works: 28632742872023
License: 405579

(BQ) 0000051414
WWRC, Inc.
1716 W. 7th
Clovis, NM 88101
Rocky Martin (575) 769-2618
Orders/Sales wwrc@wwrcinc.com

Payment Term: Net 30 days
Delivery: As Requested
Public Works: 100222009703
License: 54124

(BR) 0000009760
Weil Construction, Inc.
3344 Princeton Dr. NE,
Albuquerque, NM 87107
Orders/Sales: (505) 899-3535
c.mcmahan@weilconstruction.com

Payment Term: Net 30
Delivery: As Requested
Public Works: 3027220140401
License: 92233

(BS) 0000052947
Western Mechanical Co.
dba Western Mechanical HVAC & Plumbing
3301 Girard Blvd NE
Albuquerque NM, 87107
Orders/Sales: (505) 341-4458
mike.westernmechanical@gmail.com

Payment Term: 30 Days
Delivery: Email
Public Works: 2888620130507
License: 82364

(BT) 0000050416
White Sands Construction, Inc.
1700 10th Street
Alamogordo, NM 88310
Catlin (575) 437-7816
catlin@whitesandsconstruction.com

Payment Term: Net 30
Delivery: 1700 10th Street Alamogordo, NM 88310
Public Works: 115042009091
License: 50235

DocuSign Envelope ID: 9C0D0BCE-1F94-4323-9C4D-6BA4D233D2D9

(BU) 0000150396
Justin Wilson
dba Wilson Construction Services, LLC
123 Buckboard Trl.
Nogal, NM 88341
Orders/Sales: Christina 303-242-2631
wilsonconstruction2020@gmail.com

Payment Term: Net 30
Delivery: As Requested
Public Works: 28442702582022
License: 401335

(BV) 0000091459
Rogers, Yei
dba Wizer Electric, LLC
6017 Del Carmen Rd NE
Rio Rancho, NM 87144
Gabriel Rodriguez 505-771-4973
gabe.wizerelectric@yahoo.com

Payment Term: Net 30
Delivery: 6017 Del Carmen Rd NE
Rio Rancho, NM 87144
Public Works: 2428320120413
License: 369333

(BW) 0000177783
Young Guns Construction, LLC
3485 Highway 47
Los Lunas, New Mexico 87031
John Trujillo (505) 415-0444
ygc.llc@yahoo.com

Payment Term: Net 30
Delivery: FOB: Destination Delivery: As Required
Public Works: 28508000422023
License: 408709

(BX) 0000012754
FacilityBUILD, Inc.
5904 Florence Ave, NE
Albuquerque, NM 87113
Cameron Kilcup (505) 828-0060
camkilcup@facilitybuild.com

Payment Term: Net 30
Delivery: As Requested
Public Works: 187432011601
License: 88676

(BY) 0000082084
Munoz Corporation
PO Box 850
Gallup, NM 87301
George Munoz (505) 722-6570
munozcorp@yahoo.com

Payment Term: Net 30
Delivery: As Requested
Public Works: 28504398162023
License: 59907

DocuSign Envelope ID: 9C0D0BCE-1F94-4323-9C4D-6BA4D233D2D9

Specifications:
Establish a Statewide Price Agreement for on-call general construction services work by New Mexico licensed contractors to provide miscellaneous repairs, upgrades, improvements and new construction services for facilities and properties throughout the state of New Mexico. This Price Agreement may be utilized by all New Mexico State Agencies, commissions, political subdivisions and local public bodies applicable by law (using agency or local public body).

Term:
The term of this Price Agreement shall be for one (1) year from date of award with the option to extend for a period of two (2) additional years, on a year-to-year basis, by mutual agreement of all parties and approval of the New Mexico State Purchasing Agent at the same price, terms and conditions. This Price Agreement shall not exceed three (3) years.

Compensation Caps:
The total cost of each project, shall not exceed Four Million Dollars ($4,000,000.00). This cap includes all change orders associated with the project. Since NMSA 1978 Section 13-1-154.1 sets the cap thresholds, if modified during the term of this Agreement, any revisions to the NMSA will apply.

Legislation Affecting Price Agreement:
If future legislation affects any terms or conditions of the Price Agreement the Price Agreement may be amended to comply with the legislation.

Insurance:
The Contractor shall provide all insurance necessary for its employees on the project, including, but not limited to, Workman's Compensation Insurance. The Contractor agrees to comply with state laws and rules pertaining to Workers' Compensation Insurance coverage for its employees. If the Contractor fails to comply with the Workers' Compensation Act and applicable rules, when required to do so, this Price Agreement will be cancelled immediately.

Contractor shall indemnify and hold harmless the State and local public body, its officers, and employees, against liability, claims, damages, losses, or expenses arising out of bodily injury to persons or damage to properties caused by, or resulting from, Contractor's and/or its employees, own negligent acts or omissions while Contractor, and/or its employees perform or fail to perform its obligations and duties under the terms and conditions of this Price Agreement. This Save Harmless and Indemnification Clause is subject to the immunities, provisions, and limitations of the Tort Claims Act (Section 41-4-1, et seq., NMSA 1978 Comp. and Section 56-7-1 NMSA 1978 Comp.) and any amendments thereto.

It is specifically agreed between the parties executing this Price Agreement that it is not intended by any of the provisions of any part of the Price Agreement to create the public or any member hereof a third party beneficiary or to authorize anyone not a party to the Price Agreement to maintain a suit for wrongful death, bodily and/or personal injury to persons, damage to properties and/or other claims whatsoever pursuant to the provisions of this Price Agreement.

The Contractor shall provide public liability insurance for the minimum amount of one hundred thousand dollars ($100,000) for damage to or destruction of property arising out of each occurrence; the amount of three hundred thousand dollars ($300,000) to any person for any number of claims arising out of each occurrence for all damages other than property damage as permitted under the New Mexico Tort Claims Act; and the amount of five hundred thousand dollars ($500,000) for all claims arising out of each occurrence. Umbrella or excess liability coverage shall not be considered as any part of the primary coverage.

The vendor shall request from his insurer that the agency or local public body be named "Additional Insured" on an insurance certificate showing the vendor's insurance coverages.

All work covered by this Invitation to Bid shall be in accordance with applicable state laws, the International Building Code (IBC) and New Mexico building codes and is subject to the minimum wage rate determination issued by the New Mexico Department of Workforce Solutions, if applicable.

DocuSign Envelope ID: 9C0D0BCE-1F94-4323-9C4D-6BA4D233D2D9

Wage Rates:
All work covered by this Invitation to Bid shall be in accordance with applicable state laws and is subject to the minimum wage rate determination issued by the Department of Workforce Solutions (DWS), if applicable.

A wage rate decision is required by the Public Works Minimum Wage Act for construction, demolition or renovation purposes on projects costing sixty thousand dollars ($60,000) or more and funded in part by state or local funding. The Contractor agrees to comply with the current prevailing wage rate schedule when applicable. For current wage rates or for additional information, visit: http://www.dws.state.nm.us. The agency or local public body will request a wage rate determination from the DWS.

Bonding:
A one hundred percent (100%) performance bond and a one hundred percent (100%) payment and material bond executed by a surety company authorized to do business in the state of New Mexico will be required of the successful bidder(s) prior to each project over twenty-five thousand dollars ($25,000). Said bonds must be provided to the requesting agency and are to be filed with the agencies purchasing office. Failure to comply shall result in the order being issued to another vendor and the difference being charged back to the awarded Contractor(s). The cost of the bonds may be passed on to the agency or local public body.

A Subcontractor shall provide a performance and payment bond on a public works building project if the subcontractor's contract (to the Contractor) for work to be performed on a project is one hundred and twenty-five thousand dollars ($125,000) or more. Failure of a Subcontractor to provide required bond shall not subject the Owner to any increase in cost due to any substitution of an approved Subcontractor.

Other:
The awarded Contractor shall be responsible for all permits associated with this work as required by the State of New Mexico Construction Industries Division (CID) or the local Authority Having Jurisdiction (AHJ). The CID will issue permits for work performed at state-owned buildings.

Escalation / Reduction Clause:
Contractor shall keep pricing fixed for each year of this Agreement. Thereafter, SPD and the Contractor may adjust pricing no more than once annually through an amendment to the Agreement at the time of Agreement renewal. Contractor shall submit all pricing increase requests to SPD directly or through the agency contact in writing and provide substantiating evidence that each request is based on demonstrable market changes impacting the cost of products. The request must show all proposed increases by line item and include supporting documentation acceptable to SPD (such as a letter from a manufacturer indicating price increases, etc.) SPD's decision on what is acceptable in this context is final and shall be accepted by all parties to the Agreement. ***Requested price increases that exceed 10% will not be accepted*.** **No** price increase may result in a higher profit margin for the Contractor than at the beginning of the initial term of this Agreement. Pricing changes will apply to Agreements and amendments to Agreements entered on and after the effective date of the price change. Price decreases as well as increases shall apply in the same manner. If vendor's prices are reduced for any reason, users shall receive the benefit of such reductions, immediately. Price increases will not be retroactive to orders already in house or backorders. Orders will be filled at the price in effect on the date of receipt of the order by the vendor. To facilitate prompt consideration, all requests for price increase must include all information listed below:

1. Agreement Item Number
2. Current Item Price
3. Proposed New Price
4. Percentage of Increase
5. Mill/Supplier Notification of price increase indicating percentage of increase including reason for increase.

Contractor Note:
No person shall act as a Contractor without a license issued by the Construction Industries Division, classified to cover the type of work to be performed. No bid on a contract shall be submitted unless the Contractor has a valid Contractor's

DocuSign Envelope ID: 9C0D0BCE-1F94-4323-9C4D-6BA4D233D2D9

license issued by the CID to bid and to perform the type of work to be undertaken, as set forth in § 60-13-12, NMSA 1978.

Contractor shall provide the following information:

Contractor's New Mexico license no.: _____
Contractor's classification no.: _____
State tax identification no.: _____
Public Works Registration Number*: _____
*Pursuant to: 13-4-13.1 Public Works Contracts; Registration of Contractors and Subcontractors

When submitting a quote for a specific project valued at more than sixty thousand dollars ($60,000) for any portion of a public works project greater than sixty thousand dollars ($60,000) that is subject to the New Mexico Public Works Act, the Contractor is required to be registered with the Labor and Industrial Division of the Department of Workforce Solutions prior to submitting its quote. The using agency may reject any quote that fails to provide a Public Works Registration Number for the prime Contractor and all other listed Contractors or subcontractors. In order to submit a bid for this invitation to bid the bidder must have an Active registration for the Public Works Act.

The Contractor will be contacted on an as needed, on-call basis to perform work associated with this Price Agreement. A Price Agreement award is without assurance of quantity or dollar amount of work to be performed. Failure to respond to the Using Agency's requests may be grounds for termination of this Price Agreement. Awards for these services will be made on a statewide basis. If the awarded contractor does not wish to travel to other parts of the State, it is acceptable to decline work.

Scope of Work:
Contractors shall provide their cost for performing all the work called for in the Using Agency's scope of work for the project. Projects may be of short or long term duration, throughout the state.

Contractors shall have the technical staff to perform diagnostic services; provide incidental design services as needed; and to provide professionally prepared, stamped drawings, if needed, to obtain installation or construction permits. The Contractor is responsible for obtaining all required licenses, fees and permits required by government agencies to perform the work.

Contractors shall be 'licensed Contractors" capable of providing all coordination, supervision and services required for comprehensive general building construction, renovations, upgrade and improvement projects and to provide new construction services including incidental design. The scope of an individual project may include equipment, fixtures and furniture whether attached or not to the building. It can include site and utility work including landscaping and parking lot/ minor road/ minor bridge work. The utility work can include building power systems such as solar panels, geothermal systems, water sourcing systems, water treatment and waste disposal/treatment systems. It may also include demolition and abatement projects. Identification and abatement of asbestos containing materials (ACM) may be performed under separate contracts. It can also include security and other low voltage installations with related controls and equipment.

Contractors shall provide all materials, labor, equipment and tools required to successfully complete the work requested. The Contractors shall be capable of providing a work force with supervision, adequate to perform work for a forty (40) hour work week during normal working hours with the option of working non normal or overtime hours if required.

Replacement systems and related equipment shall meet current minimum state mandated "Energy Star" energy conservation standards.

Subcontracting of work is allowed and shall be prior approved by the Using Agency. Subcontractors shall have the appropriate current and valid Contractor's licenses for their work. And shall furnish proof upon request.

DocuSign Envelope ID: 9C0D0BCE-1F94-4323-9C4D-6BA4D233D2D9

Furnishing of submittal data for any/all new equipment and materials as well as O&M's when either/or are required, and deemed necessary for the facility is required. Training of site personnel for the proper operation of newly installed equipment/systems and its related controls will be performed and required for completion. This training must be acceptable to the person in charge of the facility.

Replacement mechanical/electrical/plumbing systems and related equipment shall meet current minimum state mandated "Energy Star" energy conservation standards.

The Contractor shall provide all protective coverings necessary to protect existing, adjacent finishes while performing its work. If any damage is encountered during the contractor's work, to other areas, the contractor will be held responsible for repairing any damage done by his employees, subcontractors and vendors.

The Contractor shall, at his own cost, restore any damage to existing, adjacent finishes damaged as a result of performing its work and to make new work inconspicuous with the existing, adjacent finishes.

The Contractor shall provide all clean-up for its operations and control of all construction debris. All work areas shall be maintained in a neat and workmanlike manner. All construction debris shall be removed from the work areas and disposed of at an approved waste disposal site. The Using Agency's trash container for the building shall not be used for disposal of any construction debris.

All work shall be according to current applicable State and National codes. All work shall be in strict compliance with the national and state building mechanical, plumbing, fire and electrical codes including SMACNA, and ASHRAE standards.

Safety shall be of main concern and enforced by the contractor on site and will be periodically inspected by the State's qualified safety personnel. The Contractor shall comply with all local, state and federal laws governing safety, health and sanitation. The on-site Superintendent shall have a minimum OSHA 10 and preferably OSHA 30 card with them at all times when on the jobsite. The Using Agency shall not in any way be responsible for any fines set forth for such violations of codes, OSHA standards or any other governing agency having jurisdiction at the work site. The Contractor shall provide all needed safe guards, safety devices and protective equipment; take any actions necessary to protect the life and health of employees on the job; the safety of the public; and to protect the property of the Using Agency in connection with the performance of the work covered by this Price Agreement. Any work involving disconnect or switching of electrical service to a work area shall utilize LOCKOUT/TAGOUT identification practices.

All personnel working on the project and providing these services shall be experienced and certified in all areas related to this work and required by this Price Agreement. Journeymen level personnel shall have the ability and necessary skills to diagnosis problems and to make the appropriate decisions needed to provide these services.

Contractor's price shall cover all labor costs, tools, equipment, materials, permits, overhead, profit, insurance and any other fees necessary to perform the work called for in the Using Agency's scope of work and drawings for this project. Any equipment required to have licensed operators shall be the responsibility of the contractor before any equipment is turned on at the jobsite. The prices quoted for each project represent the total compensation to be paid by the Using Agency for the goods and/or services provided including any and all labor, equipment, tools, materials, taxes, permits, licenses, or other costs necessary to complete the service or goods provided.

Taxes shall be added by the Contractor to its quote (line item on schedule of values) at the current tax rate at the project's location. As a separate item, the Using Agency shall ensure the appropriate gross receipts tax is added to the Contractor's project proposal and that it is encumbered in the Purchase Order.

The Contractor shall provide all the services needed and called for in the Using Agency's scope of work, in addition to the requirements set forth in this Price Agreement.

DocuSign Envelope ID: 9C0D0BCE-1F94-4323-9C4D-6BA4D233D2D9

Request for Quote (RFQ):
Each project under this Price Agreement will be individually described in a "Request for Quote (RFQ)". The RFQ will describe the scope of work, the duration of the project with the date of Substantial Completion and if there are liquidated damages for not meeting the date of substantial completion. The date of Substantial Completion is the date when the space can be occupied or the Work used/operated and is turned over to the User Agency. Final completion is the date when the project is totally complete, the punch list work complete and the Contractor's final pay application/invoice is approved. The terms and conditions of the Contractor's Statewide Price Agreement will apply to all Purchase Orders which result from the accepted quote in response to the RFQ. The Contractor's written quote will be valid for thirty (30) days, unless otherwise stipulated on the quote.

There will be NO markups allowed. A negotiated fixed fee may be added as a cost for compensation to cover the cost of overhead, profit and any other general expenses as it pertains to the project.

All subcontractor quotes shall be broken down by labor and materials costs and the Contractor shall be allowed a maximum of five percent markup for administrative costs.

The Contractor and its employees agree to cooperate with and to abide by the rules and requirements of the requesting Using Agency to not interfere with the daily operations of the Agency or to jeopardize the health, safety or welfare of the employees or general public conducting business with the Using Agency.

The Using Agency reserves the right to purchase materials directly from existing Statewide Price Agreements and other sources, and to provide these materials to the Contractor. To that end, the Contractor shall provide an itemized, quantifiable list of materials required for the project.

If the Contractor is requesting reimbursement for materials used on the work, copies of the invoices for the materials may be included when submitting invoices/pay applications. The Contractor may NOT add markups for the materials purchased. Contractor shall submit billings, based on actual Contractor costs for materials, less any applicable percentage for discounts. Contractor shall provide verification that materials purchased were used for the project if requested. Any unused, billed for materials shall be turned over to the Using Agency for which the work was provided.

The Using Agency reserves the right to procure specialty services directly from its other Statewide Price Agreements and other sources to the awarded Contractor. Specialty services provided from other Statewide Price Agreements and other sources shall be coordinated by the Contractor.

The Using Agency reserves the right to obtain quotes from multiple vendors covered under this Statewide Price Agreement and award a project to a Contractor based on the quotes.

When a service is needed, the Using Agency shall provide, at a minimum, a detailed scope of work and/or drawings defining work required.

If any equipment or building system cannot be economically repaired or has reached the end of its life cycle, the Contractor shall justify with costs and other information the need for replacement. If replacement is recommended, the Contractor will provide written justification for system and/or the model, size and type of unit recommended along with any applicable efficiency data. The Using Agency's and energy standards will be discussed and taken into consideration when proposing replacement units or systems.

The State of New Mexico requires that all materials shall be new and of the highest quality and at the best attainable price available for the type of work being performed.

No used materials shall be used on the project. Recycled materials specifically prepared for reuse to meet "LEED" certification may be permitted, with the User Agency's approval.

DocuSign Envelope ID: 9C0D0BCE-1F94-4323-9C4D-6BA4D233D2D9

The Contractor shall visit the site and compare the Using Agency's scope of work and/or drawings to the existing conditions and provide all services called for in addition to the requirements set forth in this Price Agreement.

The Contractor will be required to provide a written quote, to include the work to be performed and the amount of time required for the completion of the project and submit to the Using Agency at no cost to the Using Agency. The quote shall separate the cost of itemized materials (with any applicable discounts), labor, per diem and mileage, bonds, permits, insurance, subcontractor quote(s), itemized equipment costs, any design fees needed for stamped drawings, gross receipts tax, itemized direct site overhead costs such as portable toilets, dumpsters, temporary fencing, scaffolding, signage, traffic management, work area barriers and protective equipment, materials testing, job trailers, storage pods, etc. Job workers/project manager/superintendent's cost for vehicles or phones or gas is **not** permitted.

The Contractor's quote for mileage and per diem must be priced as follows:
"Per Diem Rate" means lodging, meals, and incidentals (excluding taxes). Reference the GSA rates in Section Lodging by month and Section Meals & Incidentals Breakdown link: https://www.gsa.gov/travel/plan-book/per-diem-rates
"Mileage Rate" for any mileage quoted for contracted work as defined below: "Mileage Rate" means "Only the mileage from the dispatch to the job site for each mile traveled by vehicle as referenced in IRS standard mileage rates using link https://www.irs.gov/taxprofessionals/standard-mileage-rates in excess of 50 miles one way". The mileage shall be calculated with https://tripmaker.randmcnally.com

Prior to commencement of any work performed the Using Agency will issue a notice to proceed for the work upon receipt of a purchase order, based on the prices set forth by Contractor's quote. The work on any project to be performed under this Contract shall commence no later than ten (10) consecutive calendar days after the date of written "Notice to Proceed." On smaller projects, an email will suffice.

The Contractor shall begin the work based on the priority identified by the Using Agency. Any delay beyond the stated completion date shall be upon agreement by the Using Agency and the Contractor.

Where work is to be conducted in a state or local correctional or secured facility, security clearances and background checks that may be required by the facility for the Contractor and its employees must be obtained prior to commencement of any work at that facility. The Using Agency reserves the right to deny any employee of the Contractor, access to the facility should the employee be in violation of any criteria required for the security clearance.

The User Agency reserves the right to provide an escort and/or full time supervision of the Contractor and its employees during any or all phases of a project, should the Using Agency feel it is in its best interest to provide these extraordinary security services.

The Using Agency reserves the right to escort any or all employees of the Contractor off its property, for any inappropriate conduct or actions that jeopardize the safety, security or wellbeing of the facility or any individual. Inappropriate behavior by the Contractor, its employees or subcontractors may be grounds for immediate removal from this Price Agreement. Any employee of the Contractor found in violation of any law, while on the User Agency's property, may be prosecuted.

Change Orders:
Any change orders to the project scope will require an additional RFQ requesting the backup materials and labor costs and shall be substantiated without a doubt there was no way of knowing the additional services were needed when the original quote was provided. The pricing shall conform to the SPA. Change orders shall be managed closely by the Using Agency. Change order abuse shall be reported to the Procurement Specialist listed on the cover page of this Price Agreement. Preventative measure shall be taken by both the contractor and the Using Agency prior to issuing the Notice to Proceed. Such measures may include: soil tests (soil boring); clarification of ambiguity in the project plan, the scope of work, the RFQ, the drawings, etc.; the project scope should be completely defined and agreed upon before any work begins.

DocuSign Envelope ID: 9C0D0BCE-1F94-4323-9C4D-6BA4D233D2D9

Using Agency's obligations:

- Shall provide, at a minimum, a detailed scope of work and/or drawings defining work required.
- Allow the Contractor limited use of on-site utilities for projects at an existing building.
- Shall provide periodic and/or random inspections of its projects. Using Agencies shall be responsible for providing its inspections, photography of the project's progress, and preparation of field observation reports.
- Conduct weekly on-site meetings with the Contractor, or on an as-needed basis, to ensure compliance with the scope of work for the project; provide assistance and guidance; to resolve problems arising during the project; and to ensure quality of work and materials being incorporated into the project.
- Process requests for payment within twenty-one (21) days of time/date stamped receipt of proper invoice and/or G702 & G703 Schedule of Values, Application and Certificate for Payment, when more than a single invoice applies to the contracted amount.
- If applicable, procure independent special inspections, commissioning, structural, soils testing with geotechnical reports and/or topographical survey.

Other Construction Related Terms and Conditions:

Time Considerations:
The work on any project to be performed under this Agreement shall commence no later than ten (10) consecutive calendar days after the date of written "Notice to Proceed." On smaller projects, an email will suffice. The date of Substantial Completion shall be described in the RFQ or related construction contract. The date can be extended by the Using Agency by valid written Change Order.

Should the Contractor neglect, refuse, or otherwise fail to complete the Work on the project within the time specified in the RFQ or related construction contract, the Contractor agrees, in partial consideration for the award of the Purchase Order, to pay to the Using Agency the amount of dollars named in the RFQ or construction contract per consecutive calendar day, not as a penalty, but as liquidated damages for such breach of the Purchase Order or related construction contract under this Price Agreement.

Mediation:
Any controversy or claim arising between the parties shall be settled by mediation if the parties cannot reach a mutually agreeable solution. The parties shall endeavor to resolve their disagreement by mediation which, unless the parties mutually agree otherwise, shall be in accordance with the procedures of the New Mexico Public Works Mediation Act (NMSA §13-4C-1 et seq.) except that before any party may select a mediator it must confer in good faith with the other party concerning the selection of a mutually acceptable mediator. Mediation shall proceed in advance of legal or equitable proceedings, which shall be stayed pending mediation for a period of **sixty (60) days** from the date of notice of mediation session, unless stayed for a longer period by agreement of the parties or court order.

Inspection of Work:
If a Purchase Order is issued for the purchase of services, the following terms shall apply when applicable:

A. Services include services performed, workmanship, and material furnished or utilized in the performance of services.
B. The Contractor shall provide and maintain an inspection system acceptable to the Using Agency covering the services under the Purchase Order. Complete records of all inspection work performed by the Contractor shall be maintained and made available to the Using Agency or other party to the Purchase Order during the term of performance of the Work and for as long thereafter as required.
C. The Using Agency has the right to inspect and test all services contemplated to the extent practicable at all times and places during the term of the Project. The Using Agency shall perform inspections and tests in a manner that will not unduly delay or interfere with Contractor's performance.
D. If the Using Agency performs inspections or tests on the premises of the Contractor or a subcontractor, the Contractor shall furnish, and shall require subcontractors to furnish, at no increase in Purchase Order price, all reasonable facilities and assistance for the safe and convenient performance of such inspections or tests.

DocuSign Envelope ID: 9C0D0BCE-1F94-4323-9C4D-6BA4D233D2D9

E. If any part of the services do not conform with the requirements, the Using Agency may require the Contractor to re-perform the services in conformity with the requirements at no increase in Purchase Order amount. When the defects in services cannot be corrected by re-performance, the Using Agency may:
   (1) Require the Contractor to take necessary action(s) to ensure that future performance conforms to the requirements;
   (2) Reduce the Purchase Order price to reflect the reduced value of the services performed.

F. If the Contractor fails to promptly re-perform the services or to take the necessary action(s) to ensure future performance in conformity with the requirements, the Using Agency may:
   (1) By Agreement or otherwise, perform the services and charge to the Contractor any cost incurred by the Using Agency that is directly related to the performance of such service; or
   (2) Cancel the Purchase Order for default.

THE PROVISIONS OF THIS ARTICLE ARE NOT EXCLUSIVE AND DO NOT WAIVE THE USING AGENCY'S OTHER LEGAL RIGHTS AND REMEDIES CAUSED BY THE CONTRACTOR'S DEFAULT/BREACH OF THE PURCHASE ORDER/PRICE AGREEMENT.

Suspension, Delay or Interruption of Work:
The Using Agency may, without cause, order the Contractor, in writing, to suspend, delay or interrupt the Work in whole or in part for such period of time as the Using Agency may determine.. Upon receipt of such notice, Contractor shall leave the jobsite and any equipment in a safe condition prior to departing. Contractor must assert rights to additional compensation within thirty (30) days after suspension of work is lifted and return to work is authorized.

Time Extension Costs:
Agreed Compensation for Overhead "General Conditions" for Changes to Time for Completion or Contract Completion Date for Changes to the Work**:** If the change in the Work also changes the Time for Completion or the Agreement Completion Date by adding days to complete the Work, an itemized accounting of the following General Conditions costs for direct Site overhead set forth in the subparagraph below may be considered as allowable costs for compensation. Home office overhead and other indirect overhead expenses are not added into the General Conditions expenses.

Direct Site Overhead Expenses:
The Contractor's per diem expenses, as shown by the itemized accounting, for the following allowable, applicable, direct Site overhead expenses: The Site superintendent's pro-rata salary, temporary Site office trailer, temporary fencing, building utility costs, security, temporary storage and temporary Site utilities including electricity, heat, water, and sanitary/toilet facilities, etc. for each day added.

If at any time there is a delay in the critical path of the Work due to postponement, due to the Contractor's efforts to justify an extension of the time or an increase in the Agreement Price beyond the deadlines or due to the Contractor's refusal to proceed with any of the approved Work, such delay and any Contractor costs resulting from it shall not serve as the basis for the extension of the Time for Completion or Agreement Completion Date or for an increase in the Contract Price.

Clean Up and Storage:

A. The Contractor will provide off-site legal disposal of all waste products, trash, and debris. Using Agency's trash receptacles will not be used by the Contractor. Sanitary facilities will "not" be available at the job site. Contractor shall be responsible for the provision and maintenance of portable toilets.
B. The Contractor on a daily basis shall keep the premises and surrounding area free from accumulation of waste materials or rubbish caused by operations under the Agreement. At completion of the Work, the Contractor shall remove from and about the Project waste materials, rubbish, the Contractor's tools, construction equipment, machinery and surplus materials and shall then thoroughly clean the premises and the site to the Using Agency's satisfaction.
C. Materials or equipment shall be delivered to the project in the manufacturer's original sealed, labeled containers and shall be adequately protected against moisture, dust, tampering or damage from improper handling or storage. Materials shall not be delivered to the site before they are needed.

DocuSign Envelope ID: 9C0D0BCE-1F94-4323-9C4D-6BA4D233D2D9

D. Storage of materials and construction equipment shall be coordinated with the Using Agency.

Permits and Fees:

A. IF APPLICABLE- The Contractor shall secure and pay for the Building Permit and other permits and governmental fees, licenses and inspections and Certificate of Occupancy necessary for proper execution and completion of the Work. Changes or modifications to the Work shall include all requirements of this paragraph.

B. The Contractor shall comply with and give notices required by laws, ordinances, rules, regulations and lawful orders of public authorities applicable to performance of the Work.

C. IF APPLICABLE- Certificates of Inspection, use and occupancy will be delivered to the Using Agency upon completion of the Work in sufficient time for occupation of the facility in accordance with the approved schedule for the Work. Contractor shall deliver a photocopy of the Building Permit to the Design Professional and Using Agency as soon as it is obtained.

Schedule, Progress Meetings and Reports:

A. The Contractor, promptly after being awarded a Project and before the first payment application, shall prepare and submit for the Using Agency's information a Critical Path Construction Schedule for the Work that indicates the intended start and completion of the various construction activities, which shall be implemented and adhered to by the Contractor, Subcontractors, material suppliers and equipment suppliers. At a minimum, the schedule shall be a GANTT type schedule and shall not exceed time limits allowed by the RFQ or Notice to Proceed with no fewer work breakdown events than line items of the Schedule of Values.

B. The Contractor shall perform the Work in general accordance with the most recent schedule submitted to the Using Agency.

C. Progress meetings shall be scheduled on a regular basis. The purpose will be to review the upcoming activities, any open issues and current progress. The Contractor shall keep any meeting minutes as needed. Progress schedules shall be updated regularly. A three week look-ahead schedule should be presented at every project meeting. An updated critical path schedule shall be presented with any change orders and with every pay application.

D. The Contractor shall prepare a Daily Report each day that Contractor, Subcontractors or any other entity are on the Project. The Daily Reports shall be maintained at the site and be well organized. The Using Agency may request copies at any time. The reports may include:
   1. Report date and who prepared the report;
   2. Weather conditions - low temp, high temp, visibility, humidity, wind, wind direction, cloud conditions, precipitation amount, other notes;
   3. Companies present by name and their number of workers, work location, total man hours that day for each company;
   4. Equipment - type, source, units of work done, location of work, hour meter reading;
   5. Material brought to site - description, units, quantity, quality, location, time;
   6. Visitors to site - name, company, time;
   7. Safety concerns - company, contact, noticed by, work activity, safety issue, requirement, outcome;
   8. Quality assurance and control - company, description of issue, specification section, issued by.

Close-out Requirements:

The Contractor shall submit to the Using Agency a separate and detailed Closeout Schedule indicating the date of Final Completion and all work to be completed before Final Completion including Close-Out requirements. The punch list of incomplete or inadequate work shall also be submitted when the work is substantially complete. Failure to include any item on the punch list does not alter the responsibility of the Contractor to complete all work in accordance with the Contract Documents.

DocuSign Envelope ID: 9C0D0BCE-1F94-4323-9C4D-6BA4D233D2D9

Before final completion can be achieved, all Work must be complete and accepted including the following as applicable:

a. Work associated with Punch List(s);
b. Testing, balance or performance operations complete and in agreement that associated work is in compliance with the Contract Documents;
c. One hard copy and one electronic copy in .pdf format of final approved test, balance or performance report(s) complete with directory of contents submitted to Using Agency;
d. As-Built drawings delivered in autocad or electronic format;
e. Written certification signed by Using Agency of delivery and stocking of extra material, equipment or components required by the Purchase Order at a location established by the Using Agency;
f. Delivery of all warranties required by the Work;
g. All keys, passes, codes, software or other methods or components of control or security which have been correctly and adequately accounted for and closed-out;
h. Completed Operations Liability insurance policy certificate, if applicable;
i. Training of staff on all applicable building systems;
j. All Storm Water Pollution Prevention Permits (SWPPP) have been updated or closed;
k. Utility transfer to User/Using Agency;
l. Operations and Maintenance Manuals;
m. Certified statement of Release of Liens (AIA Document G706A or approved form) and Consent of Surety.

Warranty:
The Contractor shall warrant its work (non-roofing and equipment), for materials and for workmanship furnished and performed under this Price Agreement for a period of one (1) year minimum from the date of acceptance or Substantial Completion whichever is longest. The Contractor shall warrant its work for repairs or restoration of existing systems, appliances and work for ninety (90) days from the date of acceptance or Substantial Completion. It is understood that some equipment is far beyond its normal life and a warranty cannot be extended/supplied. Contractor must pass on to the User Agency warranties of replaced roofs and equipment offered by the manufacturer.

Payment Provisions:
Generally payments are made on a thirty (30) day billing cycle. Payment for projects of less than thirty (30) day duration shall be paid upon the Using Agency's acceptance of the work.

All payments under this Agreement are subject to the following provisions:

A. Acceptance - In accordance with Section 13-1-158 NMSA 1978, the Agency shall determine if the Construction Work provided meets specifications. No payment shall be made for any work until the Work has been accepted in writing by the Using Agency. Unless otherwise agreed upon between the Using Agency and the Contractor, within fifteen (15) days from the date the Using Agency receives written notice from the Contractor that payment is requested for work, the Using Agency shall issue a written certification of complete or partial acceptance or rejection of the Work. Unless the Using Agency gives notice of rejection within the specified time period, the Work will be deemed to have been accepted.

B. Payment of Invoice - Upon acceptance that the Work has been received and accepted, payment shall be tendered to the Contractor within twenty one (21) days after the date of acceptance of an undisputed invoice.

C. The Contractor, before final payment of the amount due under this Contract, shall provide requested Close-out documents including any release of liens.

DocuSign Envelope ID: 9C0D0BCE-1F94-4323-9C4D-6BA4D233D2D9

BID INFORMATION:
"Tax" The bid prices for this ITB shall **not** include New Mexico gross receipts tax or local option tax(es).

"Hourly Rate" means the proposed fully loaded maximum hourly rates that include fringe benefits and any overhead costs for contractor personnel, as well as subcontractor personnel, if appropriate. The Hourly Rate does not include mileage, per diem or lodging.

"Offeror" shall reference all work positions associated with this project, and each position's firm, fixed hourly rate. This hourly rate does not include billable reimbursable rates for mileage, meals or lodging. The State of New Mexico, at its discretion, may negotiate lower rates on a project by project basis, with the awarded Contractor.

Hourly rates are requested for the three (3) levels of personnel. ***All items for pricing must be filled in.*** If one of the personnel listed is not relevant to your company, fill in a rate for a comparable employee that is on staff or could be on staff at a future time. For example, if the Superintendent also functions as the Journeyman or Experienced worker or vice versa, enter his rate for both items. Any blank items will cause a possible rejection of the bid for non-compliance.

Labor Rates:
1. Superintendent: a person with supervisory experience who maintains control of the work and work site. This person may or may not actually perform work on the project.

2. Journeyman or Experienced Worker: a person licensed by the State of New Mexico as a journeyman in the specialized field of work required and being performed or a person with many years of experience with a high rate of pay.

3. Laborer: a person with minimal experience, performing minor forms of labor.

Hours Worked:

Regular Hours: Monday through Friday and 8 am through 5 pm.

After Hours: All hours not within the days and times listed for "Regular Hours".

Holidays: Holidays will be considered "After Hours" and paid at "After Hours" rates.

The State of New Mexico reserves the right to award this Price Agreement to multiple vendors. Bidders must include pricing for ALL items in order to allow for accurate comparisons. If a Bidder fails to include one or more of those items, his Bid may be rejected.

Bids for these services are requested on a statewide basis. The intent in the bid evaluation is to add up all of the items from Items 1 through 16 in order to determine the low bidders.

*****End of Specifications*****

DocuSign Envelope ID: 9C0D0BCE-1F94-4323-9C4D-6BA4D233D2D9

Items:

Item	Approx. Qty.	UOM	Article and Description	Unit Price	Awarded Vendor
1	1	Hourly	Labor Rate - Projects under Sixty Thousand ($60,000) Superintendent, regular hours		
				$75.00	(AA)
				$75.00	(AB)
				$85.00	(AC)
				$95.00	(AD)
				$73.70	(AE)
				$105.00	(AF)
				$65.00	(AG)
				$82.30	(AH)
				$85.00	(AI)
				$95.00	(AJ)
				$76.00	(AK)
				$68.00	(AL)
				$72.50	(AM)
				$180.00	(AN)
				$108.11	(AO)
				$175.00	(AP)
				$51.72	(AQ)
				$100.00	(AR)
				$150.00	(AS)
				$150.00	(AT)
				$36.25	(AU)
				$100.00	(AV)
				$80.00	(AW)
				$195.00	(AX)
				$155.00	(AY)
				$100.00	(AZ)
				$85.00	(BA)
				$87.85	(BB)
				$75.00	(BC)
				$150.00	(BD)
				$80.40	(BE)
				$92.00	(BF)
				$72.50	(BG)
				$85.00	(BH)
				$65.00	(BI)
				$65.00	(BJ)
				$75.00	(BK)
				$70.33	(BL)
				$103.07	(BM)
				$80.00	(BN)
				$165.00	(BO)

DocuSign Envelope ID: 9C0D0BCE-1F94-4323-9C4D-6BA4D233D2D9

Item	Approx. Qty.	UOM	Article and Description	Unit Price	Awarded Vendor
			Item 1 - Continued		
				$99.78	(BP)
				$98.00	(BQ)
				$90.00	(BR)
				$70.00	(BS)
				$100.00	(BT)
				$93.00	(BU)
				$80.00	(BV)
				$85.00	(BW)
				$132.47	(BX)
				$90.00	(BY)
2	**1**	**Hourly**	**Labor Rate - Projects under Sixty Thousand ($60,000) Superintendent, after hours**		
				$112.50	(AA)
				$85.00	(AB)
				$85.00	(AC)
				$110.00	(AD)
				$73.70	(AE)
				$120.00	(AF)
				$75.00	(AG)
				$118.37	(AH)
				$85.00	(AI)
				$142.50	(AJ)
				$76.00	(AK)
				$102.00	(AL)
				$88.00	(AM)
				$200.00	(AN)
				$162.17	(AO)
				$250.00	(AP)
				$77.58	(AQ)
				$150.00	(AR)
				$225.00	(AS)
				$205.00	(AT)
				$61.62	(AU)
				$150.00	(AV)
				$100.00	(AW)
				$195.00	(AX)
				$185.00	(AY)
				$125.00	(AZ)
				$115.00	(BA)
				$131.77	(BB)
				$95.00	(BC)
				$225.00	(BD)
				$120.61	(BE)
				$145.00	(BF)

DocuSign Envelope ID: 9C0D0BCE-1F94-4323-9C4D-6BA4D233D2D9

Item	Approx. Qty.	UOM	Article and Description	Unit Price	Awarded Vendor
			Item 2 - Continued		
				$83.37	(BG)
				$95.00	(BH)
				$85.00	(BI)
				$75.00	(BJ)
				$85.00	(BK)
				$77.86	(BL)
				$173.14	(BM)
				$100.00	(BN)
				$225.00	(BO)
				$149.67	(BP)
				$126.00	(BQ)
				$90.00	(BR)
				$95.00	(BS)
				$120.00	(BT)
				$103.00	(BU)
				$120.00	(BV)
				$127.50	(BW)
				$165.42	(BX)
				$155.00	(BY)
3	**1**	**Hourly**	**Labor Rate - Projects under Sixty Thousand ($60,000) Journeyman or Experienced worker, regular hours**		
				$60.00	(AA)
				$70.00	(AB)
				$85.00	(AC)
				$105.00	(AD)
				$60.50	(AE)
				$90.00	(AF)
				$49.00	(AG)
				$78.41	(AH)
				$70.00	(AI)
				$95.00	(AJ)
				$54.00	(AK)
				$64.00	(AL)
				$58.50	(AM)
				$140.00	(AN)
				$108.11	(AO)
				$150.00	(AP)
				$48.53	(AQ)
				$125.00	(AR)
				$150.00	(AS)
				$125.00	(AT)
				$73.84	(AU)
				$75.00	(AV)

DocuSign Envelope ID: 9C0D0BCE-1F94-4323-9C4D-6BA4D233D2D9

Item	Approx. Qty.	UOM	Article and Description	Unit Price	Awarded Vendor
			Item 3 - Continued		
				$65.00	(AW)
				$165.00	(AX)
				$135.00	(AY)
				$85.00	(AZ)
				$67.00	(BA)
				$69.66	(BB)
				$70.00	(BC)
				$150.00	(BD)
				$112.83	(BE)
				$120.00	(BF)
				$67.50	(BG)
				$80.00	(BH)
				$100.00	(BI)
				$49.00	(BJ)
				$55.00	(BK)
				$62.54	(BL)
				$134.44	(BM)
				$70.00	(BN)
				$145.00	(BO)
				$85.88	(BP)
				$88.00	(BQ)
				$75.00	(BR)
				$70.00	(BS)
				$60.00	(BT)
				$70.00	(BU)
				$75.00	(BV)
				$80.00	(BW)
				$125.27	(BX)
				$120.00	(BY)
4	**1**	**Hourly**	**Labor Rate - Projects under Sixty Thousand ($60,000) Journeyman or Experienced worker, after hours**		
				$90.00	(AA)
				$75.00	(AB)
				$85.00	(AC)
				$125.00	(AD)
				$70.40	(AE)
				$110.00	(AF)
				$56.00	(AG)
				$111.07	(AH)
				$105.00	(AI)
				$142.50	(AJ)
				$65.00	(AK)
				$96.00	(AL)

DocuSign Envelope ID: 9C0D0BCE-1F94-4323-9C4D-6BA4D233D2D9

Item	Approx. Qty.	UOM	Article and Description	Unit Price	Awarded Vendor
			Item 4 - Continued		
				$74.00	(AM)
				$155.00	(AN)
				$162.17	(AO)
				$200.00	(AP)
				$72.80	(AQ)
				$135.00	(AR)
				$225.00	(AS)
				$150.00	(AT)
				$95.36	(AU)
				$112.50	(AV)
				$90.00	(AW)
				$165.00	(AX)
				$155.00	(AY)
				$110.00	(AZ)
				$85.00	(BA)
				$104.49	(BB)
				$90.00	(BC)
				$225.00	(BD)
				$169.24	(BE)
				$155.00	(BF)
				$77.63	(BG)
				$95.00	(BH)
				$110.00	(BI)
				$56.00	(BJ)
				$85.00	(BK)
				$72.55	(BL)
				$176.48	(BM)
				$90.00	(BN)
				$205.00	(BO)
				$128.82	(BP)
				$106.00	(BQ)
				$112.50	(BR)
				$95.00	(BS)
				$85.00	(BT)
				$90.00	(BU)
				$113.00	(BV)
				$120.00	(BW)
				$158.22	(BX)
				$150.00	(BY)
5	**1**	**Hourly**	**Labor Rate - Projects under Sixty Thousand ($60,000) Laborer, regular hours**		
				$35.00	(AA)
				$65.00	(AB)
				$85.00	(AC)

DocuSign Envelope ID: 9C0D0BCE-1F94-4323-9C4D-6BA4D233D2D9

Item	Approx. Qty.	UOM	Article and Description	Unit Price	Awarded Vendor
			Item 5 - Continued		
				$55.00	(AD)
				$49.50	(AE)
				$75.00	(AF)
				$28.00	(AG)
				$50.21	(AH)
				$45.00	(AI)
				$55.00	(AJ)
				$44.00	(AK)
				$62.00	(AL)
				$40.00	(AM)
				$100.00	(AN)
				$83.23	(AO)
				$100.00	(AP)
				$33.81	(AQ)
				$80.00	(AR)
				$75.00	(AS)
				$100.00	(AT)
				$21.50	(AU)
				$50.00	(AV)
				$55.00	(AW)
				$135.00	(AX)
				$120.00	(AY)
				$55.00	(AZ)
				$60.00	(BA)
				$41.43	(BB)
				$55.00	(BC)
				$75.00	(BD)
				$59.74	(BE)
				$26.50	(BF)
				$41.50	(BG)
				$65.00	(BH)
				$45.00	(BI)
				$28.00	(BJ)
				$35.00	(BK)
				$54.80	(BL)
				$30.03	(BM)
				$60.00	(BN)
				$105.00	(BO)
				$44.42	(BP)
				$74.00	(BQ)
				$45.00	(BR)
				$60.00	(BS)
				$45.00	(BT)

DocuSign Envelope ID: 9C0D0BCE-1F94-4323-9C4D-6BA4D233D2D9

Item	Approx. Qty.	UOM	Article and Description	Unit Price	Awarded Vendor
			Item 5 - Continued		
				$50.00	(BU)
				$55.00	(BV)
				$40.00	(BW)
				$87.58	(BX)
				$25.00	(BY)
6	**1**	**Hourly**	**Labor Rate - Projects under Sixty Thousand ($60,000) Laborer, after hours**		
				$52.50	(AA)
				$70.00	(AB)
				$85.00	(AC)
				$65.00	(AD)
				$58.30	(AE)
				$95.00	(AF)
				$35.00	(AG)
				$70.22	(AH)
				$67.50	(AI)
				$82.50	(AJ)
				$54.00	(AK)
				$93.00	(AL)
				$54.00	(AM)
				$110.00	(AN)
				$124.85	(AO)
				$150.00	(AP)
				$50.72	(AQ)
				$110.00	(AR)
				$112.50	(AS)
				$125.00	(AT)
				$36.12	(AU)
				$75.00	(AV)
				$75.00	(AW)
				$135.00	(AX)
				$145.00	(AY)
				$75.00	(AZ)
				$72.00	(BA)
				$62.89	(BB)
				$75.00	(BC)
				$82.50	(BD)
				$89.60	(BE)
				$52.00	(BF)
				$51.73	(BG)
				$80.00	(BH)
				$45.00	(BI)
				$35.00	(BJ)
				$50.00	(BK)

DocuSign Envelope ID: 9C0D0BCE-1F94-4323-9C4D-6BA4D233D2D9

Item	Approx. Qty.	UOM	Article and Description	Unit Price	Awarded Vendor
			Item 6 - Continued		
				$74.30	(BL)
				$60.06	(BM)
				$80.00	(BN)
				$125.00	(BO)
				$66.63	(BP)
				$89.00	(BQ)
				$67.50	(BR)
				$85.00	(BS)
				$60.00	(BT)
				$65.00	(BU)
				$83.00	(BV)
				$60.00	(BW)
				$114.89	(BX)
				$50.00	(BY)
7	**1**	**Hourly**	**Labor Rate - Projects over Sixty Thousand ($60,000) Wage Decision Projects, Superintendent, regular hours**		
				$75.00	(AA)
				$80.00	(AB)
				$85.00	(AC)
				$110.00	(AD)
				$73.70	(AE)
				$105.00	(AF)
				$65.00	(AG)
				$82.30	(AH)
				$85.00	(AI)
				$95.00	(AJ)
				$76.00	(AK)
				$68.00	(AL)
				$75.00	(AM)
				$180.00	(AN)
				$108.11	(AO)
				$200.00	(AP)
				$51.72	(AQ)
				$135.00	(AR)
				$150.00	(AS)
				$150.00	(AT)
				$36.25	(AU)
				$115.00	(AV)
				$80.00	(AW)
				$130.00	(AX)
				$155.00	(AY)
				$105.00	(AZ)
				$100.00	(BA)

DocuSign Envelope ID: 9C0D0BCE-1F94-4323-9C4D-6BA4D233D2D9

Item	Approx. Qty.	UOM	Article and Description	Unit Price	Awarded Vendor
			Item 7 - Continued		
				$87.85	(BB)
				$75.00	(BC)
				$150.00	(BD)
				$80.40	(BE)
				$99.00	(BF)
				$83.37	(BG)
				$85.00	(BH)
				$75.00	(BI)
				$65.00	(BJ)
				$75.00	(BK)
				$92.36	(BL)
				$114.07	(BM)
				$90.00	(BN)
				$165.00	(BO)
				$99.78	(BP)
				$126.00	(BQ)
				$90.00	(BR)
				$70.00	(BS)
				$100.00	(BT)
				$93.00	(BU)
				$98.00	(BV)
				$105.00	(BW)
				$162.10	(BX)
				$101.00	(BY)
8	**1**	**Hourly**	**Labor Rate - Projects over Sixty Thousand ($60,000) Wage Decision Projects, Superintendent, after hours**		
				$112.50	(AA)
				$90.00	(AB)
				$85.00	(AC)
				$120.00	(AD)
				$73.70	(AE)
				$120.00	(AF)
				$75.00	(AG)
				$118.37	(AH)
				$85.00	(AI)
				$142.50	(AJ)
				$76.00	(AK)
				$102.00	(AL)
				$88.00	(AM)
				$200.00	(AN)
				$162.17	(AO)
				$275.00	(AP)
				$77.58	(AQ)

DocuSign Envelope ID: 9C0D0BCE-1F94-4323-9C4D-6BA4D233D2D9

Item	Approx. Qty.	UOM	Article and Description	Unit Price	Awarded Vendor
			Item 8 - Continued		
				$150.00	(AR)
				$225.00	(AS)
				$205.00	(AT)
				$61.60	(AU)
				$172.50	(AV)
				$100.00	(AW)
				$130.00	(AX)
				$185.00	(AY)
				$130.00	(AZ)
				$130.00	(BA)
				$128.71	(BB)
				$95.00	(BC)
				$225.00	(BD)
				$120.61	(BE)
				$140.00	(BF)
				$95.88	(BG)
				$100.00	(BH)
				$95.00	(BI)
				$75.00	(BJ)
				$95.00	(BK)
				$138.54	(BL)
				$176.44	(BM)
				$110.00	(BN)
				$225.00	(BO)
				$149.67	(BP)
				$153.00	(BQ)
				$90.00	(BR)
				$95.00	(BS)
				$120.00	(BT)
				$103.00	(BU)
				$147.00	(BV)
				$150.00	(BW)
				$206.87	(BX)
				$155.00	(BY)
9	**1**	**Hourly**	**Labor Rate - Projects over Sixty Thousand ($60,000) Wage Decision Projects, Journeyman, regular hours**		
				$60.00	(AA)
				$75.00	(AB)
				$85.00	(AC)
				$120.00	(AD)
				$70.50	(AE)
				$90.00	(AF)
				$49.00	(AG)

DocuSign Envelope ID: 9C0D0BCE-1F94-4323-9C4D-6BA4D233D2D9

Item	Approx. Qty.	UOM	Article and Description	Unit Price	Awarded Vendor
			Item 9 - Continued		
				$78.41	(AH)
				$70.00	(AI)
				$95.00	(AJ)
				$88.00	(AK)
				$64.00	(AL)
				$68.00	(AM)
				$140.00	(AN)
				$108.11	(AO)
				$175.00	(AP)
				$48.53	(AQ)
				$125.00	(AR)
				$150.00	(AS)
				$125.00	(AT)
				$78.36	(AU)
				$90.00	(AV)
				$75.00	(AW)
				$110.00	(AX)
				$135.00	(AY)
				$90.00	(AZ)
				$82.00	(BA)
				$68.04	(BB)
				$70.00	(BC)
				$150.00	(BD)
				$157.77	(BE)
				$152.00	(BF)
				$77.63	(BG)
				$85.00	(BH)
				$125.00	(BI)
				$49.00	(BJ)
				$55.00	(BK)
				$75.42	(BL)
				$169.74	(BM)
				$80.00	(BN)
				$145.00	(BO)
				$85.88	(BP)
				$106.00	(BQ)
				$75.00	(BR)
				$70.00	(BS)
				$60.00	(BT)
				$70.00	(BU)
				$90.00	(BV)
				$90.00	(BW)
				$153.70	(BX)

DocuSign Envelope ID: 9C0D0BCE-1F94-4323-9C4D-6BA4D233D2D9

Item	Approx. Qty.	UOM	Article and Description	Unit Price	Awarded Vendor
			Item 9 - Continued		
				$150.00	(BY)
10	**1**	**Hourly**	**Labor Rate - Projects over Sixty Thousand ($60,000) Wage Decision Projects, Journeyman, after hours**		
				$90.00	(AA)
				$80.00	(AB)
				$85.00	(AC)
				$130.00	(AD)
				$78.50	(AE)
				$110.00	(AF)
				$56.00	(AG)
				$111.07	(AH)
				$105.00	(AI)
				$142.50	(AJ)
				$88.00	(AK)
				$96.00	(AL)
				$82.00	(AM)
				$155.00	(AN)
				$162.17	(AO)
				$250.00	(AP)
				$72.80	(AQ)
				$135.00	(AR)
				$225.00	(AS)
				$150.00	(AT)
				$95.60	(AU)
				$135.00	(AV)
				$95.00	(AW)
				$110.00	(AX)
				$155.00	(AY)
				$120.00	(AZ)
				$98.00	(BA)
				$102.06	(BB)
				$90.00	(BC)
				$225.00	(BD)
				$236.66	(BE)
				$202.00	(BF)
				$89.27	(BG)
				$100.00	(BH)
				$125.00	(BI)
				$56.00	(BJ)
				$85.00	(BK)
				$116.35	(BL)
				$246.20	(BM)
				$100.00	(BN)

DocuSign Envelope ID: 9C0D0BCE-1F94-4323-9C4D-6BA4D233D2D9

Item	Approx. Qty.	UOM	Article and Description	Unit Price	Awarded Vendor
			Item 10 - Continued		
				$205.00	(BO)
				$128.82	(BP)
				$127.00	(BQ)
				$112.50	(BR)
				$95.00	(BS)
				$85.00	(BT)
				$90.00	(BU)
				$135.00	(BV)
				$130.00	(BW)
				$199.66	(BX)
				$220.00	(BY)
11	**1**	**Hourly**	**Labor Rate - Projects over Sixty Thousand ($60,000) Wage Decision Projects, Laborer, regular hours**		
				$35.00	(AA)
				$70.00	(AB)
				$85.00	(AC)
				$65.00	(AD)
				$57.00	(AE)
				$75.00	(AF)
				$28.00	(AG)
				$50.21	(AH)
				$45.00	(AI)
				$55.00	(AJ)
				$60.00	(AK)
				$62.00	(AL)
				$47.00	(AM)
				$100.00	(AN)
				$83.23	(AO)
				$125.00	(AP)
				$33.81	(AQ)
				$85.00	(AR)
				$75.00	(AS)
				$100.00	(AT)
				$37.37	(AU)
				$65.00	(AV)
				$55.00	(AW)
				$90.00	(AX)
				$120.00	(AY)
				$60.00	(AZ)
				$72.00	(BA)
				$40.95	(BB)
				$55.00	(BC)
				$75.00	(BD)

DocuSign Envelope ID: 9C0D0BCE-1F94-4323-9C4D-6BA4D233D2D9

Item	Approx. Qty.	UOM	Article and Description	Unit Price	Awarded Vendor
			Item 11 - Continued		
				$74.14	(BE)
				$50.50	(BF)
				$51.73	(BG)
				$75.00	(BH)
				$50.00	(BI)
				$28.00	(BJ)
				$35.00	(BK)
				$57.78	(BL)
				$57.94	(BM)
				$70.00	(BN)
				$105.00	(BO)
				$44.42	(BP)
				$89.00	(BQ)
				$45.00	(BR)
				$60.00	(BS)
				$45.00	(BT)
				$50.00	(BU)
				$65.00	(BV)
				$50.00	(BW)
				$114.54	(BX)
				$50.00	(BY)
12	**1**	**Hourly**	**Labor Rate - Projects over Sixty Thousand ($60,000) Wage Decision Projects, Laborer, after hours**		
				$52.50	(AA)
				$75.00	(AB)
				$85.00	(AC)
				$75.00	(AD)
				$60.00	(AE)
				$95.00	(AF)
				$35.00	(AG)
				$70.22	(AH)
				$67.50	(AI)
				$82.50	(AJ)
				$71.00	(AK)
				$93.00	(AL)
				$59.00	(AM)
				$110.00	(AN)
				$124.85	(AO)
				$175.00	(AP)
				$50.72	(AQ)
				$110.00	(AR)
				$112.50	(AS)
				$125.00	(AT)

DocuSign Envelope ID: 9C0D0BCE-1F94-4323-9C4D-6BA4D233D2D9

Item	Approx. Qty.	UOM	Article and Description	Unit Price	Awarded Vendor
			Item 12 - Continued		
				$56.06	(AU)
				$97.50	(AV)
				$68.00	(AW)
				$90.00	(AX)
				$145.00	(AY)
				$80.00	(AZ)
				$85.00	(BA)
				$61.43	(BB)
				$75.00	(BC)
				$82.50	(BD)
				$112.12	(BE)
				$104.50	(BF)
				$59.49	(BG)
				$90.00	(BH)
				$65.00	(BI)
				$35.00	(BJ)
				$50.00	(BK)
				$86.75	(BL)
				$115.87	(BM)
				$90.00	(BN)
				$125.00	(BO)
				$66.63	(BP)
				$112.00	(BQ)
				$67.50	(BR)
				$85.00	(BS)
				$60.00	(BT)
				$65.00	(BU)
				$98.00	(BV)
				$70.00	(BW)
				$150.31	(BX)
				$100.00	(BY)
13	**1**	**Hourly**	**Labor Rate - Diagnosis, project estimates, troubleshooting, or other not listed**		
				$100.00	(AA)
				$65.00	(AB)
				$250.00	(AC)
				$125.00	(AD)
				$90.00	(AE)
				$90.00	(AF)
				$125.00	(AG)
				$86.21	(AH)
				$90.00	(AI)
				$145.00	(AJ)
				$140.00	(AK)

DocuSign Envelope ID: 9C0D0BCE-1F94-4323-9C4D-6BA4D233D2D9

Item	Approx. Qty.	UOM	Article and Description	Unit Price	Awarded Vendor
			Item 13 - Continued		
				$125.00	(AL)
				$85.00	(AM)
				$100.00	(AN)
				$115.62	(AO)
				$200.00	(AP)
				$51.72	(AQ)
				$100.00	(AR)
				$250.00	(AT)
				$85.00	(AU)
				$100.00	(AV)
				$100.00	(AW)
				$150.00	(AX)
				$225.00	(AY)
				$150.00	(AZ)
				$200.00	(BA)
				$87.85	(BB)
				$75.00	(BC)
				$75.00	(BD)
				$80.40	(BE)
				$100.00	(BF)
				$85.00	(BG)
				$85.00	(BH)
				$85.00	(BI)
				$125.00	(BJ)
				$95.00	(BK)
				$98.86	(BL)
				$93.50	(BM)
				$75.00	(BN)
				$485.00	(BO)
				$120.00	(BP)
				$145.00	(BQ)
				$90.00	(BR)
				$70.00	(BS)
				$110.00	(BT)
				$100.00	(BU)
				$175.00	(BV)
				$100.00	(BW)
				$150.00	(BX)
				$115.00	(BY)
14	**1**	**% Discount**	**Discount off all parts and materials. Invoice will include copies of all purchases for parts and materials, including vendor and date purchased. Enter zero if no discount is offered.**		
				0%	(AA)

DocuSign Envelope ID: 9C0D0BCE-1F94-4323-9C4D-6BA4D233D2D9

Item	Approx. Qty.	UOM	Article and Description	Unit Price	Awarded Vendor
			Item 14 - Continued		
				0%	(AB)
				0%	(AC)
				0%	(AD)
				0%	(AE)
				0%	(AF)
				0%	(AG)
				0%	(AH)
				0%	(AI)
				2%	(AJ)
				0%	(AK)
				0%	(AL)
				0%	(AM)
				0%	(AN)
				0%	(AO)
				0%	(AP)
				0%	(AQ)
				0%	(AR)
				0%	(AS)
				0%	(AT)
				2%	(AU)
				0%	(AV)
				0%	(AW)
				0%	(AX)
				0%	(AY)
				0%	(AZ)
				0%	(BA)
				0%	(BB)
				0%	(BC)
				0%	(BE)
				0%	(BF)
				0%	(BG)
				0%	(BH)
				0%	(BI)
				0%	(BJ)
				5%	(BK)
				0%	(BL)
				0%	(BM)
				0%	(BN)
				0%	(BO)
				0%	(BP)
				0%	(BQ)
				0%	(BR)
				15%	(BS)

DocuSign Envelope ID: 9C0D0BCE-1F94-4323-9C4D-6BA4D233D2D9

Item	Approx. Qty.	UOM	Article and Description	Unit Price	Awarded Vendor
			Item 14 - Continued		
				0%	(BT)
				0%	(BU)
				2%	(BV)
				0%	(BW)
				0%	(BX)
				0%	(BY)
15	**1**	**Day**	**Daily per diem rate for overnight stay as needed. Including dinner and breakfast per person. Bidders should provide a Per Diem Rate that does not exceed the Per Diem Rate defined above in this bid. If a Per Diem Rate is not submitted by the Bidder, the defined rate shall be the default.**		
				$150.00	(AA)
				$125.00	(AB)
				$50.00	(AC)
				$150.00	(AD)
				$180.00	(AE)
				$175.00	(AF)
				$100.00	(AG)
				$175.00	(AH)
				$125.00	(AI)
				$195.00	(AJ)
				$150.00	(AK)
				$131.00	(AL)
				$130.00	(AM)
				$210.00	(AN)
				$195.00	(AO)
				$250.00	(AP)
				$55.00	(AQ)
				$157.00	(AR)
				$150.00	(AS)
				$185.00	(AT)
				$163.00	(AU)
				$276.00	(AV)
				$170.00	(AW)
				$150.00	(AX)
				$185.00	(AY)
				$175.00	(AZ)
				$185.00	(BA)
				$100.00	(BB)
				$120.00	(BC)
				$150.00	(BD)
				$184.75	(BE)
				$120.00	(BF)
				$155.00	(BG)

DocuSign Envelope ID: 9C0D0BCE-1F94-4323-9C4D-6BA4D233D2D9

Item	Approx. Qty.	UOM	Article and Description	Unit Price	Awarded Vendor
			Item 15 - Continued		
				$120.00	(BH)
				$225.00	(BI)
				$100.00	(BJ)
				$125.00	(BK)
				$203.71	(BL)
				$66.00	(BM)
				$125.00	(BN)
				$285.00	(BO)
				$150.00	(BP)
				$195.00	(BQ)
				$125.00	(BR)
				$195.00	(BS)
				$150.00	(BT)
				$185.00	(BU)
				$157.00	(BV)
				$200.00	(BW)
				$260.00	(BX)
				$115.00	(BY)
16	**1**	**Mile**	**One way per mile cost, per service vehicle required, measured from the awarded Contractor's office/shop to the requested job site, for travel in excess of 50 miles one way, based on mapquest.com. Bidders should provide a Mileage Rate that does not exceed the IRS Mileage Rate linked above. If a Mileage Rate is not submitted by the Bidder, the defined rate shall be the default.**		
				$0.50	(AA)
				$1.25	(AB)
				$0.65	(AC)
				$2.50	(AD)
				$1.25	(AE)
				$0.66	(AF)
				$10.00	(AG)
				$1.26	(AH)
				$0.655	(AI)
				$0.66	(AJ)
				$1.00	(AK)
				$0.66	(AL)
				$0.65	(AM)
				$0.655	(AN)
				$1.55	(AO)
				$3.50	(AP)
			* per mile	$1.50	(AQ)
				$1.50	(AR)
				$20.00	(AS)
				$10.00	(AT)

DocuSign Envelope ID: 9C0D0BCE-1F94-4323-9C4D-6BA4D233D2D9

Item	Approx. Qty.	UOM	Article and Description	Unit Price	Awarded Vendor
			Item 16 - Continued		
				0.655	(AV)
				$0.65	(AW)
				$0.65	(AX)
				$4.50	(AY)
				$3.00	(AZ)
				$10.00	(BA)
				$0.655	(BB)
				$0.65	(BC)
				$4.00	(BD)
				$0.66	(BE)
				$8.50	(BF)
				$0.65	(BG)
			* cents per mile	$0.655	(BH)
				$1.50	(BI)
				$10.00	(BJ)
				$0.75	(BK)
				$0.74	(BL)
				$5.00	(BM)
				$1.00	(BN)
				$3.75	(BO)
				$0.87	(BP)
				$1.85	(BQ)
				$0.655	(BR)
				$1.25	(BS)
				$0.57	(BT)
				$2.50	(BU)
				$0.25	(BV)
				$1.75	(BW)
				$0.655	(BX)
				$8.50	(BY)

***** 16 Awarded Items Total*****

DocuSign

Certificate Of Completion

Envelope Id: 9C0D0BCE1F9443239C4D6BA4D233D2D9
Status: Completed
Subject: GSD/SPD Procurement#: 40-00000-23-00034 General Construction Award
Source Envelope:
Document Pages: 45
Signatures: 1
Certificate Pages: 5
Initials: 2
AutoNav: Enabled
EnvelopeId Stamping: Enabled
Time Zone: (UTC-07:00) Mountain Time (US & Canada)

Envelope Originator:
Tami Concha
1100 S Saint Francis Dr
Santa Fe, NM 87502
Tami.Concha@gsd.nm.gov
IP Address: 164.64.63.2

Record Tracking

Status: Original
12/29/2023 1:05:04 PM
Holder: Tami Concha
Tami.Concha@gsd.nm.gov
Location: DocuSign
Security Appliance Status: Connected
Pool: StateLocal
Storage Appliance Status: Connected
Pool: GSD
Location: DocuSign

Signer Events	Signature	Timestamp
Michael Saavedra Michael.Saavedra@gsd.nm.gov New Mexico General Services Security Level: Email, Account Authentication (None)	MS Signature Adoption: Pre-selected Style Using IP Address: 164.64.62.10	Sent: 12/29/2023 1:13:14 PM Viewed: 12/29/2023 1:13:44 PM Signed: 12/29/2023 1:13:50 PM
Electronic Record and Signature Disclosure: Accepted: 6/4/2020 11:04:51 AM ID: 9cac1b3e-4279-4c8f-b2b4-c607ea9821d8		
Tami Concha tami.concha@gsd.nm.gov Procurement Specialist II New Mexico General Services, State Purchasing Division Security Level: Email, Account Authentication (None)	JC Signature Adoption: Pre-selected Style Using IP Address: 164.64.62.10	Sent: 12/29/2023 1:13:54 PM Viewed: 12/29/2023 1:14:14 PM Signed: 12/29/2023 1:14:21 PM
Electronic Record and Signature Disclosure: Not Offered via DocuSign		
Natalie Martinez natalie.martinez1@gsd.nm.gov Deputy Director New Mexico General Services Security Level: Email, Account Authentication (None)	Natalie Martinez Signature Adoption: Pre-selected Style Using IP Address: 164.64.62.10	Sent: 12/29/2023 1:14:25 PM Viewed: 12/29/2023 1:23:23 PM Signed: 12/29/2023 1:27:07 PM
Electronic Record and Signature Disclosure: Not Offered via DocuSign		

In Person Signer Events	Signature	Timestamp

Editor Delivery Events	Status	Timestamp

Agent Delivery Events	Status	Timestamp

Intermediary Delivery Events	Status	Timestamp

Certified Delivery Events	Status	Timestamp

Carbon Copy Events	Status	Timestamp

Witness Events	Signature	Timestamp

Notary Events	Signature	Timestamp

Envelope Summary Events	Status	Timestamps
Envelope Sent	Hashed/Encrypted	12/29/2023 1:13:14 PM
Certified Delivered	Security Checked	12/29/2023 1:23:23 PM
Signing Complete	Security Checked	12/29/2023 1:27:07 PM
Completed	Security Checked	12/29/2023 1:27:07 PM

Payment Events	Status	Timestamps

Electronic Record and Signature Disclosure

ELECTRONIC RECORD AND SIGNATURE DISCLOSURE

A. ELECTRONIC RECORD AND SIGNATURE DISCLOSURE (ERSD)

From time to time, New Mexico General Services Department (GSD), on behalf of the State of New Mexico (SONM), may be required by law to provide you with certain written notices or disclosures. Stated below are the terms and conditions for GSD's providing you such notices and disclosures electronically through the DocuSign system. Please read this information carefully. If you are able to access this information electronically and agree to **this Electronic Record and Signature Disclosure (ERSD)**, please confirm your agreement by selecting the check-box next to "I agree to use electronic records and signatures" before clicking "CONTINUE" within the DocuSign system.

B. Obtaining paper copies

At any time up to twenty (20) calendar days following your use of DocuSign to electronically sign a document, you may request a paper copy of any record provided or made available electronically to you by GSD. You will have the ability to download and print documents SONM sends you through the DocuSign system during and immediately after the signing session and, if you elect to create a DocuSign account, you may access the documents for a twenty (20) calendar day period after such documents are first sent to you. Following the twenty (20) day period, if you want GSD to send you paper copies of any such documents from GSD's office, you will be charged a $1.00 per-page fee plus postage. You may request delivery of such paper copies from GSD by following the procedure stated in Section H, below.

C. Withdrawing your consent

If you decide to receive notices and disclosures from GSD electronically, you may at any time change your mind and inform GSD you want to receive required notices and disclosures only in paper format. The procedure concerning how you may inform GSD of your decision to receive future notices and disclosures in paper format as well as withdraw your consent to receive notices and disclosures electronically is stated in Section D, immediately below.

D. Consequences of changing your mind

If you elect to receive required notices and disclosures only in paper format, it will slow the speed with which GSD will be able to complete certain steps in specific transactions and deliver paper copies to you. GSD will need: (1) to send the required notices or disclosures to you in paper format; and (2) wait until GSD receives your acknowledgment of your receipt of such paper notices or disclosures. Further, you will no longer be able to use the DocuSign system to receive required notices and consents electronically from SONM or to electronically sign documents generated and sent to you from SONM.

E. All notices and disclosures will be sent to you electronically

Unless you inform GSD otherwise according to these procedures, GSD will electronically provide you through the DocuSign system all required notices, disclosures, authorizations, acknowledgements and other documents that are required to be provided or made available to you during the course of your electronic signature relationship with SONM. To reduce the possibility of inadvertent non-receipt, GSD prefers to provide all required notices and disclosures by the same method and to the same email or physical address that you furnish to GSD. Thus, you may receive the disclosures and notices electronically or in paper form. If you do not agree with this procedure, please inform GSD according to the procedures stated in Section I, below. Please also refer to Section D, immediately above, which states the consequences resulting from your declination of electronic delivery of notices and disclosures.

F. How to contact GSD:

You may inform General Services Department (GSD) of any changes you select regarding State Purchasing Division's (SPD) electronic communications with you, to request paper copies of certain information from SPD, and to withdraw your prior consent to receive notices and disclosures electronically by emailing your request(s) to SPD at: *GSD.SPDinfo@state.nm.us*

G. To advise SPD of your new email address

To inform SPD of a change in the email address to which SPD sends you notices and disclosures electronically, you must send an email to SPD at *GSD.SPDinfo@state.nm.us* and in the body of such request you must include your previous and new email addresses.

H. To request paper copies from SPD

To request delivery of paper copies of electronic notices and disclosures that DocuSign and/or SPD have previously provided to you, you must send an email to SPD at *GSD.SPDinfo@state.nm.us* and in the body of your email request state your email address, full name, mailing address, and telephone number. SPD will charge you a $1.00 per page copy fee plus postage.

I. To withdraw your consent with SPD

To inform SPD that you no longer wish to receive notices and disclosures in electronic format you may:

(1) Decline to sign a document from within a signing session, and on the subsequent page, select the check-box indicating you wish to withdraw your consent, or you may:

(2) Send SPD an email to *GSD.SPDinfo@state.nm.us* and in the body of your request state your email address, full name, mailing address, and telephone number.

J. Required hardware and software

The minimum system requirements for using the DocuSign system may change over time. The current DocuSign system requirements may be found at:
https://support.docusign.com/guides/signer-guide-signing-system-requirements

K. Acknowledging your access and consent to receive and sign documents electronically

To confirm that you are able to electronically access the information contained in this Electronic Record and Signature Disclosure (ERSD), please confirm that you have: (1) read this ERSD, and either: (2) you are able to print on paper or electronically save this ERSD for your future reference and access; or (3) you are able to email this ERSD to an email address where you will be able to print this ERSD on paper and/or save this ERSD for your future reference and access. Further, if you consent to receiving notices and disclosures from DocuSign and/or SPD exclusively in electronic format, then select the check-box next to "I agree to use electronic records and signatures," before you click "CONTINUE" within the DocuSign system.

By selecting the check-box next to "I agree to use electronic records and signatures," you confirm that:

- You have read this Electronic Record and Signature Disclosure (ERSD); and
- You can print this ERSD on paper, or you can save and/ or send this ERSD to a location where you can print this ERSD, for your future reference and access; and
- Until or unless you notify SPD as stated in this ERSD, you consent to exclusively receive through electronic means all notices, disclosures, authorizations, acknowledgements, and other documents that are required to be provided or made available to you by SPD during the course of your electronic signature relationship with SPD.

ACORD

CERTIFICATE OF LIABILITY INSURANCE

DATE (MM/DD/YYYY) 7/1/2025

THIS CERTIFICATE IS ISSUED AS A MATTER OF INFORMATION ONLY AND CONFERS NO RIGHTS UPON THE CERTIFICATE HOLDER. THIS CERTIFICATE DOES NOT AFFIRMATIVELY OR NEGATIVELY AMEND, EXTEND OR ALTER THE COVERAGE AFFORDED BY THE POLICIES BELOW. THIS CERTIFICATE OF INSURANCE DOES NOT CONSTITUTE A CONTRACT BETWEEN THE ISSUING INSURER(S), AUTHORIZED REPRESENTATIVE OR PRODUCER, AND THE CERTIFICATE HOLDER.

IMPORTANT: If the certificate holder is an ADDITIONAL INSURED, the policy(ies) must have ADDITIONAL INSURED provisions or be endorsed. If SUBROGATION IS WAIVED, subject to the terms and conditions of the policy, certain policies may require an endorsement. A statement on this certificate does not confer rights to the certificate holder in lieu of such endorsement(s).

PRODUCER License # 0757776
HUB International Insurance Services (SOW)
6565 Americas Parkway Suite 720
Albuquerque, NM 87110

CONTACT NAME:
PHONE (A/C, No, Ext): (505) 828-4000 FAX (A/C, No): (866) 487-3972
E-MAIL ADDRESS: lauren.einerson@hubinternational.com

INSURER(S) AFFORDING COVERAGE	NAIC #
INSURER A : Steadfast Insurance Company	26387
INSURER B : Zurich Insurance Company	
INSURER C : Zurich American of Illinois	27855
INSURER D :	
INSURER E :	
INSURER F :	

INSURED
Advanced Environmental Solutions, Inc. & Robert & June Chavez
2318 Roldan Dr
Belen, NM 87002--2627

COVERAGES **CERTIFICATE NUMBER:** **REVISION NUMBER:**

THIS IS TO CERTIFY THAT THE POLICIES OF INSURANCE LISTED BELOW HAVE BEEN ISSUED TO THE INSURED NAMED ABOVE FOR THE POLICY PERIOD INDICATED. NOTWITHSTANDING ANY REQUIREMENT, TERM OR CONDITION OF ANY CONTRACT OR OTHER DOCUMENT WITH RESPECT TO WHICH THIS CERTIFICATE MAY BE ISSUED OR MAY PERTAIN, THE INSURANCE AFFORDED BY THE POLICIES DESCRIBED HEREIN IS SUBJECT TO ALL THE TERMS, EXCLUSIONS AND CONDITIONS OF SUCH POLICIES. LIMITS SHOWN MAY HAVE BEEN REDUCED BY PAID CLAIMS.

INSR LTR	TYPE OF INSURANCE	ADDL INSD	SUBR WVD	POLICY NUMBER	POLICY EFF (MM/DD/YYYY)	POLICY EXP (MM/DD/YYYY)	LIMITS	
A	X COMMERCIAL GENERAL LIABILITY						EACH OCCURRENCE	$ 1,000,000
	CLAIMS-MADE X OCCUR			GPL-4407668-00	7/1/2025	7/1/2026	DAMAGE TO RENTED PREMISES (Ea occurrence)	$ 25,000
							MED EXP (Any one person)	$ 5,000
							PERSONAL & ADV INJURY	$ 1,000,000
	GEN'L AGGREGATE LIMIT APPLIES PER:						GENERAL AGGREGATE	$ 2,000,000
	X POLICY PRO-JECT LOC						PRODUCTS - COMP/OP AGG	$ 2,000,000
	OTHER:							$
B	AUTOMOBILE LIABILITY						COMBINED SINGLE LIMIT (Ea accident)	$ 1,000,000
	X ANY AUTO			BAP-4401321-00	7/1/2025	7/1/2026	BODILY INJURY (Per person)	$
	OWNED AUTOS ONLY / SCHEDULED AUTOS						BODILY INJURY (Per accident)	$
	HIRED AUTOS ONLY / NON-OWNED AUTOS ONLY						PROPERTY DAMAGE (Per accident)	$
								$
A	UMBRELLA LIAB X OCCUR						EACH OCCURRENCE	$ 4,000,000
	X EXCESS LIAB CLAIMS-MADE			SXS-4407667-00	7/1/2025	7/1/2026	AGGREGATE	$
	DED X RETENTION $ 0						Aggregate	$ 4,000,000
C	WORKERS COMPENSATION AND EMPLOYERS' LIABILITY Y / N						PER STATUTE / OTH-ER	
	ANY PROPRIETOR/PARTNER/EXECUTIVE OFFICER/MEMBER EXCLUDED? (Mandatory in NH)	N / A		WC-4302367-00	7/1/2025	7/1/2026	E.L. EACH ACCIDENT	$ 1,000,000
	If yes, describe under DESCRIPTION OF OPERATIONS below						E.L. DISEASE - EA EMPLOYEE	$ 1,000,000
							E.L. DISEASE - POLICY LIMIT	$ 1,000,000
A	Pollution / Environm			GPL-4407668-00	7/1/2025	7/1/2026	Occur.	1,000,000
A	Professional Liabili			GPL-4407668-00	7/1/2025	7/1/2026	Occur.	1,000,000

DESCRIPTION OF OPERATIONS / LOCATIONS / VEHICLES (ACORD 101, Additional Remarks Schedule, may be attached if more space is required)

CERTIFICATE HOLDER

City of Santa Fe Fuel Facility
1142 Siler
Santa Fe, NM 87502

CANCELLATION

SHOULD ANY OF THE ABOVE DESCRIBED POLICIES BE CANCELLED BEFORE THE EXPIRATION DATE THEREOF, NOTICE WILL BE DELIVERED IN ACCORDANCE WITH THE POLICY PROVISIONS.

AUTHORIZED REPRESENTATIVE

© 1988-2015 ACORD CORPORATION. All rights reserved.
The ACORD name and logo are registered marks of ACORD

Services Offered to the City of Santa Fe (2025)

Approved:
These services have been approved by the New Mexico Council for Purchasing from Persons with Disabilities and are available through Horizons of New Mexico.

- ADA Accessibility Consulting Services
- Auctioneering Services
- Bulk Mailing and Sorting
- Call Center Services
- Computer Refurbishing
- Courier Services
- Decontamination, Sanitation and Sterilization Services
- Debris Removal
- Document Imaging
- Document Shredding
- Envelope Stuffing
- General Labor
- Hard Drive Destruction
- Janitorial and Housekeeping Services – Including Carpet Cleaning & Floor Care
- Landscape Irrigation
- Landscaping
- Mailing Services
- Management of an Assistive Technology Reuse and Recycling Program
- Medical Waste Disposal
- Meeting Minute Preparation Services
- Pest Control and Extermination Services
- Printing Services
- Rest Area Maintenance
- Screen Printing
- Snow Removal
- Temporary Staffing Services
- Yard, Grounds, and Lawn Maintenance

Permissive:
The services have been approved by the New Mexico Council for Purchasing from Persons with Disabilities as permissible for sale under the State Use Act through Horizons of New Mexico. While the Council recognizes that certain Horizons of New Mexico members are capable of performing the services listed below, said services are considered permissive and excluded from the mandatory aspect of the State Use Program. Any procurement of the below services through Horizons of New Mexico is at the discretion of the purchasing agent and will be considered by the Council on a case-by-case basis.

- Graphic Design
- Graphic Design - Logo Design
- IT – Enterprise Application
- IT – IV & V
- IT Network and Database Management
- IT Support
- IT Security Services
- IT – Web Design
- IT – Web Programmer
- Marketing
- Social Media Marketing
- Training Services

For the complete State Use service list, please go to: http://horizonsofnewmexico.org/services.html

From: DUTTON-LEYDA, TRAVIS K.
To: KAHAHANE, ELIZABETH L.; Purchasing DET
Subject: RE: Determination Request – Closure of Siler Fuel Station
Date: Friday, April 25, 2025 9:35:54 AM
Attachments: image002.png
image004.png

Greetings,

The scope of work as written would be Construction. This determination relates only to that question and is no comment on whether the scope of work or procurement method meet all legal standards. I reserve the right to change this determination if the scope of work differs from the scope of work submitted for the original determination. This procurement must be conducted using the processes and procedures set forth by the City of Santa Fe, Central Purchasing, the Procurement Manual, and state statutes.

Please note:

- Save this email as a PDF and upload it into the corresponding Munis record(s).
- If your request includes anything that needs to be reviewed and preapproved by another City Department/Division, please send the same SOW to the corresponding email address and include their response in your packet/Munis.
  -Treasury (Point of Sale Systems) – questions: drsena@santafenm.gov; clromero@santafenm.gov. Request signature from: clromero@santafenm.gov
  -IT components (everything IT) – questions: ereview@santafenm.gov. Request signature from: edcandelaria@santafenm.gov;
  Copy: zxdushdurova@santafenm.gov; lenobes@santafenm.gov; lfworstell@santafenm.gov
  -Vehicles – questions: fleet@santafenm.gov. Request signature from: dmjaramillo@santafenm.gov
  -Grants – questions: grants@santafenm.gov. Request signature from: evlujan@santafenm.gov
  - Construction, Facilities, Furniture, Fixtures, Equipment, etc. – questions: fmdreview@santafenm.gov. Request signature from: jsburnett@santafenm.gov_
  -Emergency Related Purchases – questions oem@santafenm.govand. Request signature from: bgwilliams@santafenm.gov
  -Asset over $5k – questions: accountspayable@santafenm.gov. Request signature from: jxbolden@santafenm.gov
- Ensure that the appropriate templates and forms are used https://intranet.santafenm.gov/finance_1 and documented procedures/laws/rules are followed.

- > $20k per year, when processing this procurement, please ensure the procurement number issued by Munis and the procurement name are used in the appropriate documents and the subject of emails.
- If you are processing a procurement where the forecasted amount is =/> $60k, per

NMSA 1978, Section 13-1-102, the procurement method must be ITB (if you choose not to use a cooperative or an existing contract). If you feel you need to process an RFP, you must get an Authorization and Plan approved before you process.

- < $20k per year, one quote is acceptable.
- From $20k to $60k per year, if you aren't using a cooperative or existing contract, you'll need to provide 3 quotes in your req. Must use the Munis Bid Module after 12/21/2023.
- Please keep this as part of the procurement file for future reference.
- Figure out your funding source and **inform Purchasing**. To ensure that the proper documents and language are used, it is important to identify the funding source for the subsequent contract. For instance, if federal funds are involved, the procurement request and subsequent contract must include the necessary federal language. Therefore, it is crucial to determine the funding source beforehand.
- Please review the pages linked below to determine whether any of the existing contracts/price agreements or cooperative agreements are applicable to this request. You might be able to use an existing price agreement to save time and money.
    - https://www.generalservices.state.nm.us/state-purchasing/statewide-price-agreements/ (if you choose to use a Statewide, you do not need to ask Horizons if they can do the work. State Purchasing must offer the SOW to Horizons prior to placing the award on their website.)
    - https://naspovaluepoint.org/categories/
    - https://www.omniapartners.com/publicsector/contracts
    - https://www.buyboard.com/home.aspx
    - https://www.h-gac.com/Home
    - https://www.gsaelibrary.gsa.gov/
    - https://www.sourcewell-mn.gov/contract-search

- Submit or send your request to the appropriate MS Teams channel or email address:
    - RFPs requests to https://teams.microsoft.com/l/channel/19%3ad63b9c8b586d424fa5eed34177146ac5%40thread.tacv2/RFP%2520Requests?groupId=a367d8c2-992f-4c74-8e7d-0ccb6950c9a1&tenantId=77b69f5a-55ed-4363-8616-4867b0bc707f
    - ITBs requests to https://teams.microsoft.com/l/channel/19%3a48e1e4588c0440a09cfbd9b907ed42d4%40thread.tacv2/ITB%2520Requests?groupId=a367d8c2-992f-4c74-8e7d-0ccb6950c9a1&tenantId=77b69f5a-55ed-4363-8616-4867b0bc707f
    - Determination requests to purchasing_det@santafenm.gov
    - And all other requests to purchasing@santafenm.gov

Thank you for submitting this scope of work for my review.

Book time to meet with me

Regards,

Travis Dutton-Leyda
Chief Procurement Officer
City of Santa Fe
200 Lincoln Avenue
Santa Fe, NM 87501
505-629-8351
tkduttonleyda@santafenm.gov

https://santafenm.gov/finance-2/purchasing-1

Vendor Registration and Current Procurement Opportunities:
https://cityofsantafenmvendors.munisselfservice.com/Vendors/VBids/SearchResults.aspx

Internal Link: https://intranet.santafenm.gov/central_purchasing_division_cpd

CITY OF SANTA FE
FINANCE

"A journey of a thousand miles begins with a single step" ~ Lao Tzu

---

From: KAHAHANE, ELIZABETH L. <elkahahane@santafenm.gov>
Sent: Friday, April 25, 2025 9:35 AM
To: Purchasing DET <purchasing_det@santafenm.gov>
Subject: Determination Request – Closure of Siler Fuel Station

Aloha Purchasing,

Facilities Division is requesting a SOW determination for the following:

Scope of Work for the Closure of Siler Fuel Station

1. Liquid Removal from Piping and Underground Storage Tanks (USTs)

1. Pump out remaining liquids into 55-gallon drums (estimated quantity: 2-3 drums).
2. Label and store drums in compliance with hazardous materials regulations.
3. Arrange for the proper disposal or recycling of the pumped liquids.

2. Removal of Tanks, Piping, and Associated Equipment

1. Remove all USTs, piping, fuel islands, dispensers, Veeder Root system, and electrical conduits.
2. Properly transport and dispose of all removed components in accordance with local, state, and federal regulations.
3. Provide documentation of disposal or recycling of materials.

3. Soil Sampling and Testing

1. Collect soil samples from specified locations as directed by the NMPSTB inspector.
2. Perform laboratory testing of soil samples for contaminants.
3. Submit soil sample analysis results to NMPSTB.

4. Remediation of Contaminated Soil (if required)

1. Excavate and remove contaminated soil as directed by NMPSTB or other regulatory authorities.
2. Replace excavated areas with clean fill material and compact as required.
3. Document and report the remediation process, including disposal or treatment of contaminated soil.

5. Site Backfill and Surface Restoration

1. Supply and place approved backfill material to fill voids left by the removal of tanks and piping.
2. Compact the backfill to meet specified density requirements.
3. Install a 4-inch layer of blacktop over the backfilled area for temporary surface restoration.

6. Canopy or Building Removal

1. Dismantle canopy and transport materials for proper disposal or recycling.
2. Ensure removal process is conducted safely and with minimal disruption to the surrounding area.
3. Remove all existing surface structures, including but not limited to buildings, concrete pads, and other fixed installations.
4. Transport demolition debris to an approved disposal or recycling facility.
5. Ensure site is left clear and clean, ready for final inspection.

Please let me know if additional information is required.
Thank you!

Best,
Elizabeth "Lisa" Kahahane, CPO
Contract Administrator | Facilities Division | Public Works Dept.
Email: elkahahane@santafenm.gov
M: (505) 795-2439
O: (505) 955-5934

CITY OF SANTA FE
FACILITIES

GB Packet_AES_Siler Fuel Station Remediation _$224704.40_06 26 2025

Final Audit Report 2025-06-27

Created:	2025-06-26
By:	Elizabeth Kahahane (elkahahane@santafenm.gov)
Status:	Signed
Transaction ID:	CBJCHBCAABAA0qICgp4Fit3oecmRS6waZgrL-yhvxKoC

"GB Packet_AES_Siler Fuel Station Remediation_$224704.40_06 26 2025" History

Document created by Elizabeth Kahahane (elkahahane@santafenm.gov)
2025-06-26 - 10:16:32 PM GMT- IP address: 63.232.20.2

Document emailed to MARLISA WILSON (mbwilson@santafenm.gov) for signature
2025-06-26 - 10:20:29 PM GMT

Email viewed by MARLISA WILSON (mbwilson@santafenm.gov)
2025-06-26 - 10:21:14 PM GMT- IP address: 63.232.20.2

Document e-signed by MARLISA WILSON (mbwilson@santafenm.gov)
Signature Date: 2025-06-26 - 10:21:43 PM GMT - Time Source: server- IP address: 63.232.20.2

Document emailed to JOHN BURNETT (jsburnett@santafenm.gov) for signature
2025-06-26 - 10:21:46 PM GMT

Email viewed by JOHN BURNETT (jsburnett@santafenm.gov)
2025-06-27 - 1:52:48 PM GMT- IP address: 73.228.3.65

Document e-signed by JOHN BURNETT (jsburnett@santafenm.gov)
Signature Date: 2025-06-27 - 1:53:23 PM GMT - Time Source: server- IP address: 73.228.3.65

Document emailed to rawheeler@santafenm.gov for signature
2025-06-27 - 1:53:26 PM GMT

Email viewed by rawheeler@santafenm.gov
2025-06-27 - 4:21:48 PM GMT- IP address: 76.18.67.54

Signer rawheeler@santafenm.gov entered name at signing as Regina Wheeler
2025-06-27 - 4:25:49 PM GMT- IP address: 76.18.67.54

Powered by Adobe Acrobat Sign

Document e-signed by Regina Wheeler (rawheeler@santafenm.gov)

Signature Date: 2025-06-27 - 4:25:51 PM GMT - Time Source: server- IP address: 76.18.67.54

Agreement completed.

2025-06-27 - 4:25:51 PM GMT

Powered by Adobe Acrobat Sign

GB Packet_AES_Siler Fuel Station Remediation_$224704.40_07 08 2025 v3.0 REVISED as Operational Expense

Final Audit Report 2025-07-10

Created:	2025-07-09
By:	Elizabeth Kahahane (elkahahane@santafenm.gov)
Status:	Signed
Transaction ID:	CBJCHBCAABAAcNkQs_zvvUrxcaIY80C_dF88o5545b44

"GB Packet_AES_Siler Fuel Station Remediation_$224704.40_07 08 2025 v3.0 REVISED as Operational Expense" History

Document created by Elizabeth Kahahane (elkahahane@santafenm.gov)
2025-07-09 - 2:55:55 PM GMT- IP address: 63.232.20.2

Document emailed to MARLISA WILSON (mbwilson@santafenm.gov) for signature
2025-07-09 - 3:01:14 PM GMT

Email viewed by MARLISA WILSON (mbwilson@santafenm.gov)
2025-07-09 - 3:01:34 PM GMT- IP address: 63.232.20.2

Document e-signed by MARLISA WILSON (mbwilson@santafenm.gov)
Signature Date: 2025-07-09 - 3:01:53 PM GMT - Time Source: server- IP address: 63.232.20.2

Document emailed to JOHN BURNETT (jsburnett@santafenm.gov) for signature
2025-07-09 - 3:01:56 PM GMT

Email viewed by JOHN BURNETT (jsburnett@santafenm.gov)
2025-07-09 - 4:11:46 PM GMT- IP address: 63.232.20.2

Document e-signed by JOHN BURNETT (jsburnett@santafenm.gov)
Signature Date: 2025-07-09 - 4:12:08 PM GMT - Time Source: server- IP address: 63.232.20.2

Document emailed to rawheeler@santafenm.gov for signature
2025-07-09 - 4:12:12 PM GMT

Email viewed by rawheeler@santafenm.gov
2025-07-09 - 4:31:48 PM GMT- IP address: 63.232.20.2

Powered by Adobe Acrobat Sign

Signer rawheeler@santafenm.gov entered name at signing as RW

2025-07-10 - 6:13:51 PM GMT- IP address: 76.18.67.54

Document e-signed by RW (rawheeler@santafenm.gov)

Signature Date: 2025-07-10 - 6:13:53 PM GMT - Time Source: server- IP address: 76.18.67.54

Agreement completed.

2025-07-10 - 6:13:53 PM GMT

GB Packet_AES_Siler Fuel Station Remediation_$224704.40_07 08 2025 v3.0 REVISED as Operational Expense

Final Audit Report 2025-07-18

Created:	2025-07-11
By:	Kristy Miera (kamiera@santafenm.gov)
Status:	Signed
Transaction ID:	CBJCHBCAABAAeWdtrfFB8vAEfK635ZDTwNL18727xmPE

"GB Packet_AES_Siler Fuel Station Remediation_$224704.40_07 08 2025 v3.0 REVISED as Operational Expense" History

Document created by Kristy Miera (kamiera@santafenm.gov)
2025-07-11 - 10:23:47 PM GMT- IP address: 63.232.20.2

Document sent to ALEXIS LOTERO (aclotero@santafenm.gov) and ajhopkins@santafenm.gov ajhopkins@santafenm.gov (ajhopkins@santafenm.gov) for signature. One of them to sign
2025-07-11 - 10:27:52 PM GMT

Email viewed by ajhopkins@santafenm.gov ajhopkins@santafenm.gov (ajhopkins@santafenm.gov)
2025-07-14 - 9:44:01 PM GMT- IP address: 104.47.65.254

Document e-signed by ajhopkins@santafenm.gov ajhopkins@santafenm.gov (ajhopkins@santafenm.gov)
Signature Date: 2025-07-14 - 9:44:26 PM GMT - Time Source: server- IP address: 63.232.20.2

Document sent to JoAnn Lovato (jdlovato@santafenm.gov) and Travis Dutton-Leyda (tkduttonleyda@santafenm.gov) for signature. One of them to sign
2025-07-14 - 9:44:30 PM GMT

Email viewed by Travis Dutton-Leyda (tkduttonleyda@santafenm.gov)
2025-07-14 - 9:44:37 PM GMT- IP address: 20.159.64.138

Email viewed by JoAnn Lovato (jdlovato@santafenm.gov)
2025-07-14 - 10:23:27 PM GMT- IP address: 63.232.20.2

Document e-signed by JoAnn Lovato (jdlovato@santafenm.gov)
Signature Date: 2025-07-14 - 10:26:22 PM GMT - Time Source: server- IP address: 63.232.20.2

Powered by Adobe Acrobat Sign

Document emailed to EMILY OSTER (ekoster@santafenm.gov) for signature

2025-07-14 - 10:26:30 PM GMT

Email viewed by EMILY OSTER (ekoster@santafenm.gov)

2025-07-17 - 3:27:15 PM GMT- IP address: 104.47.65.254

Email viewed by EMILY OSTER (ekoster@santafenm.gov)

2025-07-18 - 4:41:45 PM GMT- IP address: 104.47.64.254

Document e-signed by EMILY OSTER (ekoster@santafenm.gov)

Signature Date: 2025-07-18 - 4:50:38 PM GMT - Time Source: server- IP address: 63.232.20.2

Agreement completed.

2025-07-18 - 4:50:38 PM GMT

Signature: 

Email: xivigil@santafenm.gov

25-0371 Advanced Environmental Solutions, Inc.

Final Audit Report 2025-08-16

Created:	2025-08-15
By:	XAVIER VIGIL (xivigil@santafenm.gov)
Status:	Signed
Transaction ID:	CBJCHBCAABAA9g7diwKXYst3om-NzcC_MD0CDx26FHPW

"25-0371 Advanced Environmental Solutions, Inc." History

Document created by XAVIER VIGIL (xivigil@santafenm.gov)
2025-08-15 - 10:09:22 PM GMT- IP address: 63.232.20.2

Document emailed to XAVIER VIGIL (xivigil@santafenm.gov) for signature
2025-08-15 - 10:11:23 PM GMT

Document e-signed by XAVIER VIGIL (xivigil@santafenm.gov)
Signature Date: 2025-08-15 - 10:11:42 PM GMT - Time Source: server- IP address: 63.232.20.2

Document emailed to Alan Webber (amwebber@santafenm.gov) for signature
2025-08-15 - 10:11:45 PM GMT

Email viewed by Alan Webber (amwebber@santafenm.gov)
2025-08-16 - 4:45:10 AM GMT- IP address: 104.28.48.217

Document e-signed by Alan Webber (amwebber@santafenm.gov)
Signature Date: 2025-08-16 - 7:41:08 PM GMT - Time Source: server- IP address: 73.242.252.236

Document emailed to GERALYN CARDENAS (gfcardenas@santafenm.gov) for signature
2025-08-16 - 7:41:11 PM GMT

Email viewed by GERALYN CARDENAS (gfcardenas@santafenm.gov)
2025-08-16 - 8:36:11 PM GMT- IP address: 174.240.18.111

Document e-signed by GERALYN CARDENAS (gfcardenas@santafenm.gov)
Signature Date: 2025-08-16 - 8:36:31 PM GMT - Time Source: server- IP address: 174.240.18.111

Agreement completed.
2025-08-16 - 8:36:31 PM GMT

Powered by Adobe Acrobat Sign

Docusign Envelope ID: 11117956-2BF6-47A8-B8B2-25F1C63C11E1

State of New Mexico
General Services Department
Purchasing Division

Statewide Price Agreement Amendment

Awarded Vendor:
51 Vendors

Ship To:
All State of New Mexico agencies, commissions, institutions, political subdivisions and local public bodies allowed by law.

Invoice:
As Requested at Time of Order

Number**: 40-00000-23-00034**

Amendment No.**: THREE**

Term**: December 29, 2023 – December 28, 2026**

Procurement Specialist: **Danette Medrano**

Telephone No.: **(505) 690-3578**

Email: **Danette.Medrano@gsd.nm.gov**

Title: **General Construction Services**

This amendment is to be attached to the respective Price Agreement and become a part thereof.

In accordance with Price Agreement provisions, and by mutual agreement of all parties, this Price Agreement is extended from December 29, 2025 to December 28, 2026 at the same price, terms and conditions.

This amendment is also to reflect a change in address for the following:

Vendor: (AL) 0000116075 Davenport Construction Management LLC

FROM: 141 Camino De Las Crucitas
Santa Fe, New Mexico 87501

TO: 3201 Mercantile Court, Suite A
Santa Fe, New Mexico 87507

Vendor: (BN) 0000137030 Sweep Construction

FROM: 4904 Jefferson St NE, Suite E
Albuquerque, New Mexico 87109

TO: 6817 Academy Parkway West NE
Albuquerque, New Mexico 87109

Except as modified by this amendment, the provisions of the Price Agreement shall remain in full force and effect.

Accepted for the State of New Mexico

Dorothy Mendonca

Date: 11/17/2025

Dorothy Mendonca
New Mexico State Purchasing Agent

Certificate Of Completion

Envelope Id: 11117956-2BF6-47A8-B8B2-25F1C63C11E1
Status: Completed
Subject: General Construction Services #40-00000-23-00034 A003
Source Envelope:
Document Pages: 1
Signatures: 1
Envelope Originator:
Certificate Pages: 5
Initials: 2
Danette Medrano
AutoNav: Enabled
1100 S Saint Francis Dr
EnvelopeId Stamping: Enabled
Santa Fe, NM 87502
Time Zone: (UTC-07:00) Mountain Time (US & Canada)
Danette.Medrano@gsd.nm.gov
IP Address: 164.64.62.10

Record Tracking

Status: Original
11/14/2025 8:08:38 AM
Holder: Danette Medrano
Danette.Medrano@gsd.nm.gov
Location: DocuSign
Security Appliance Status: Connected
Pool: StateLocal
Storage Appliance Status: Connected
Pool: General Services Department
Location: Docusign

Signer Events	Signature	Timestamp
Johnny DeSha johnny.desha@gsd.nm.gov Procurement Specialist Manager Security Level: Email, Account Authentication (None), Login with SSO **Electronic Record and Signature Disclosure:** Accepted: 3/25/2025 7:13:20 AM ID: d1ec4280-451a-42ce-b36b-a39ed00bc76f	 Signature Adoption: Pre-selected Style Using IP Address: 164.64.62.10	Sent: 11/14/2025 8:15:29 AM Viewed: 11/14/2025 8:51:24 AM Signed: 11/14/2025 8:53:06 AM
Danette Medrano Danette.Medrano@gsd.nm.gov Security Level: Email, Account Authentication (None) **Electronic Record and Signature Disclosure:** Accepted: 9/15/2025 3:30:12 PM ID: ef47593b-7502-4533-88a5-c23fe45c6487	 Signature Adoption: Pre-selected Style Using IP Address: 164.64.62.10	Sent: 11/14/2025 8:53:07 AM Viewed: 11/17/2025 8:54:12 AM Signed: 11/17/2025 8:54:17 AM
Dorothy Mendonca dorothy.mendonca@gsd.nm.gov SPD Division Director / State Purchasing Agent General Services Department Signing Group: 35000 - State Purchasing Agent Security Level: Email, Account Authentication (None) **Electronic Record and Signature Disclosure:** Accepted: 4/14/2023 7:24:59 AM ID: 51f6380f-50f7-4227-afb5-572b373dfb7c	 Signature Adoption: Pre-selected Style Using IP Address: 164.64.62.10	Sent: 11/17/2025 8:54:19 AM Viewed: 11/17/2025 8:55:55 AM Signed: 11/17/2025 8:56:02 AM

In Person Signer Events	Signature	Timestamp

Editor Delivery Events	Status	Timestamp

Agent Delivery Events	Status	Timestamp

Intermediary Delivery Events	Status	Timestamp

Certified Delivery Events	Status	Timestamp

Carbon Copy Events	Status	Timestamp

Witness Events	Signature	Timestamp

Notary Events	Signature	Timestamp

Envelope Summary Events	Status	Timestamps
Envelope Sent	Hashed/Encrypted	11/14/2025 8:15:29 AM
Certified Delivered	Security Checked	11/17/2025 8:55:55 AM
Signing Complete	Security Checked	11/17/2025 8:56:02 AM
Completed	Security Checked	11/17/2025 8:56:02 AM

Payment Events	Status	Timestamps

Electronic Record and Signature Disclosure

ELECTRONIC RECORD AND SIGNATURE DISCLOSURE

A. ELECTRONIC RECORD AND SIGNATURE DISCLOSURE (ERSD)

From time to time, New Mexico General Services Department (GSD), on behalf of the State of New Mexico (SONM), may be required by law to provide you with certain written notices or disclosures. Stated below are the terms and conditions for GSD's providing you such notices and disclosures electronically through the DocuSign system. Please read this information carefully. If you are able to access this information electronically and agree to **this Electronic Record and Signature Disclosure (ERSD)**, please confirm your agreement by selecting the check-box next to "I agree to use electronic records and signatures" before clicking "CONTINUE" within the DocuSign system.

B. Obtaining paper copies

At any time up to twenty (20) calendar days following your use of DocuSign to electronically sign a document, you may request a paper copy of any record provided or made available electronically to you by GSD. You will have the ability to download and print documents SONM sends you through the DocuSign system during and immediately after the signing session and, if you elect to create a DocuSign account, you may access the documents for a twenty (20) calendar day period after such documents are first sent to you. Following the twenty (20) day period, if you want GSD to send you paper copies of any such documents from GSD's office, you will be charged a $1.00 per-page fee plus postage. You may request delivery of such paper copies from GSD by following the procedure stated in Section H, below.

C. Withdrawing your consent

If you decide to receive notices and disclosures from GSD electronically, you may at any time change your mind and inform GSD you want to receive required notices and disclosures only in paper format. The procedure concerning how you may inform GSD of your decision to receive future notices and disclosures in paper format as well as withdraw your consent to receive notices and disclosures electronically is stated in Section D, immediately below.

D. Consequences of changing your mind

If you elect to receive required notices and disclosures only in paper format, it will slow the speed with which GSD will be able to complete certain steps in specific transactions and deliver paper copies to you. GSD will need: (1) to send the required notices or disclosures to you in paper format; and (2) wait until GSD receives your acknowledgment of your receipt of such paper notices or disclosures. Further, you will no longer be able to use the DocuSign system to receive required notices and consents electronically from SONM or to electronically sign documents generated and sent to you from SONM.

E. All notices and disclosures will be sent to you electronically

Unless you inform GSD otherwise according to these procedures, GSD will electronically provide you through the DocuSign system all required notices, disclosures, authorizations, acknowledgements and other documents that are required to be provided or made available to you during the course of your electronic signature relationship with SONM. To reduce the possibility of inadvertent non-receipt, GSD prefers to provide all required notices and disclosures by the same method and to the same email or physical address that you furnish to GSD. Thus, you may receive the disclosures and notices electronically or in paper form. If you do not agree with this procedure, please inform GSD according to the procedures stated in Section I, below. Please also refer to Section D, immediately above, which states the consequences resulting from your declination of electronic delivery of notices and disclosures.

F. How to contact GSD:

You may inform General Services Department (GSD) of any changes you select regarding State Purchasing Division's (SPD) electronic communications with you, to request paper copies of certain information from SPD, and to withdraw your prior consent to receive notices and disclosures electronically by emailing your request(s) to SPD at: *GSD.SPDinfo@state.nm.us*

G. To advise SPD of your new email address

To inform SPD of a change in the email address to which SPD sends you notices and disclosures electronically, you must send an email to SPD at *GSD.SPDinfo@state.nm.us* and in the body of such request you must include your previous and new email addresses.

H. To request paper copies from SPD

To request delivery of paper copies of electronic notices and disclosures that DocuSign and/or SPD have previously provided to you, you must send an email to SPD at *GSD.SPDinfo@state.nm.us* and in the body of your email request state your email address, full name, mailing address, and telephone number. SPD will charge you a $1.00 per page copy fee plus postage.

I. To withdraw your consent with SPD

To inform SPD that you no longer wish to receive notices and disclosures in electronic format you may:

(1) Decline to sign a document from within a signing session, and on the subsequent page, select the check-box indicating you wish to withdraw your consent, or you may:

(2) Send SPD an email to *GSD.SPDinfo@state.nm.us* and in the body of your request state your email address, full name, mailing address, and telephone number.

J. Required hardware and software

The minimum system requirements for using the DocuSign system may change over time. The current DocuSign system requirements may be found at:
https://support.docusign.com/guides/signer-guide-signing-system-requirements

K. Acknowledging your access and consent to receive and sign documents electronically

To confirm that you are able to electronically access the information contained in this Electronic Record and Signature Disclosure (ERSD), please confirm that you have: (1) read this ERSD, and either: (2) you are able to print on paper or electronically save this ERSD for your future reference and access; or (3) you are able to email this ERSD to an email address where you will be able to print this ERSD on paper and/or save this ERSD for your future reference and access. Further, if you consent to receiving notices and disclosures from DocuSign and/or SPD exclusively in electronic format, then select the check-box next to "I agree to use electronic records and signatures," before you click "CONTINUE" within the DocuSign system.

By selecting the check-box next to "I agree to use electronic records and signatures," you confirm that:

- You have read this Electronic Record and Signature Disclosure (ERSD); and
- You can print this ERSD on paper, or you can save and/ or send this ERSD to a location where you can print this ERSD, for your future reference and access; and
- Until or unless you notify SPD as stated in this ERSD, you consent to exclusively receive through electronic means all notices, disclosures, authorizations, acknowledgements, and other documents that are required to be provided or made available to you by SPD during the course of your electronic signature relationship with SPD.

Docusign Envelope ID: F7054613-D4F6-4F51-88B2-8AAEDECCAACE

State of New Mexico
General Services Department
Purchasing Division

Statewide Price Agreement Amendment

Awarded Vendor:
51 Vendors

Ship To:
All State of New Mexico agencies, commissions, institutions, political subdivisions and local public bodies allowed by law.

Invoice:
As Requested at Time of Order

Number**: 40-00000-23-00034**

Amendment No.**: Two**

Term**: December 29, 2023 – December 28, 2025**

Procurement Specialist**: Yvette Anaya** ya

Telephone No.**: (505) 500-9737**

Email: **Yvette.anaya@gsd.nm.gov**

Title**: General Construction Services**

This amendment is to be attached to the respective Price Agreement and become a part thereof.

In accordance with Price Agreement provisions, and by mutual agreement of all parties, this Price Agreement is extended from December 29, 2024 to December 28, 2025 at the same price, terms and conditions.

This amendment is issued to reflect the following effective immediately. See Attached pages for vendor information and pricing escalation for (BF) B & D Industries, Inc.

Except as modified by this amendment, the provisions of the Price Agreement shall remain in full force and effect.

Accepted for the State of New Mexico

Dorothy Mendonca

Date: 12/26/2024

Dorothy Mendonca
New Mexico State Purchasing Agent

Docusign Envelope ID: F7054613-D4F6-4F51-88B2-8AAEDECCAACE

B&D Industries, Inc. (AF)

Column1	Item	UOM	Description	Current Rate	New Rate
Under $60,000	1	Hour	Superintendent, regular hours	$ 105.00	**$ 105.00**
Under $60,000	2	Hour	Superintendent, after hours	$ 120.00	**$ 120.00**
Under $60,000	3	Hour	Journeymen/Experienced Worker, regular hours worked	$ 90.00	**$ 95.77**
Under $60,000	4	Hour	Journeymen/Experienced Worker, after hours worked	$ 110.00	**$ 117.05**
Under $60,000	5	Hour	Laborer, regular hours worked	$ 75.00	**$ 78.81**
Under $60,000	6	Hour	Laborer, after hours worked	$ 95.00	**$ 99.83**
Over $60,000	7	Hour	Superintendent, regular hours	$ 105.00	**$ 100.00**
Over $60,000	8	Hour	Superintendent, after hours	$ 120.00	**$ 115.00**
Over $60,000	9	Hour	Journeymen/Experienced Worker, regular hours worked	$ 90.00	**$ 95.77**
Over $60,000	10	Hour	Journeymen/Experienced Worker, after hours worked	$ 110.00	**$ 117.05**
Over $60,000	11	Hour	Laborer, regular hours worked	$ 75.00	**$ 78.81**
Over $60,000	12	Hour	Laborer, after hours worked	$ 95.00	**$ 99.83**
All Projects	13	Hour	Diagnosis, project estimates, troubleshooting	$ 90.00	**$ 95.77**
All Projects	14	%	Discount of all parts	0%	**0%**
All Projects	15	Day	Daily per diem rate for overnight stay as needed including dinner & breakfast per person	$ 175.00	**$ 175.00**
All Projects	16	Mile	One way per mile cost, per vehicle	$ 0.66	**$ 0.66**

Certificate Of Completion

Envelope Id: F7054613-D4F6-4F51-88B2-8AAEDECCAACE
Status: Completed
Subject: Please DocuSign: SPD SPA 40-00000-23-00034 A002
Source Envelope:
Document Pages: 2
Signatures: 1
Envelope Originator:
Certificate Pages: 5
Initials: 2
Yvette Anaya
AutoNav: Enabled
1100 S Saint Francis Dr
EnvelopeId Stamping: Enabled
Santa Fe, NM 87502
Time Zone: (UTC-07:00) Mountain Time (US & Canada)
yvette.anaya@gsd.nm.gov
IP Address: 164.64.62.10

Record Tracking

Status: Original
12/26/2024 9:17:13 AM
Holder: Yvette Anaya
yvette.anaya@gsd.nm.gov
Location: DocuSign
Security Appliance Status: Connected
Pool: StateLocal
Storage Appliance Status: Connected
Pool: General Services Department
Location: DocuSign

Signer Events	Signature	Timestamp
Michael Saavedra michael.saavedra@gsd.nm.gov IT and Const. Bureau Chief New Mexico General Services Security Level: Email, Account Authentication (None) **Electronic Record and Signature Disclosure:** Accepted: 6/4/2020 11:04:51 AM ID: 9cac1b3e-4279-4c8f-b2b4-c607ea9821d8	MS Signature Adoption: Pre-selected Style Using IP Address: 164.64.62.10	Sent: 12/26/2024 9:18:36 AM Viewed: 12/26/2024 9:22:41 AM Signed: 12/26/2024 9:22:54 AM
Yvette Anaya yvette.anaya@gsd.nm.gov Executive Procurement Officer New Mexico General Services Security Level: Email, Account Authentication (None) **Electronic Record and Signature Disclosure:** Not Offered via DocuSign	ya Signature Adoption: Pre-selected Style Using IP Address: 164.64.62.10	Sent: 12/26/2024 9:22:55 AM Viewed: 12/26/2024 9:23:48 AM Signed: 12/26/2024 9:23:53 AM
Dorothy Mendonca dorothy.mendonca@gsd.nm.gov SPD Division Director / State Purchasing Agent General Services Department Signing Group: 35000 - State Purchasing Agent Security Level: Email, Account Authentication (None) **Electronic Record and Signature Disclosure:** Accepted: 4/14/2023 7:24:59 AM ID: 51f6380f-50f7-4227-afb5-572b373dfb7c	Dorothy Mendonca Signature Adoption: Pre-selected Style Using IP Address: 98.60.107.202 Signed using mobile	Sent: 12/26/2024 9:23:54 AM Resent: 12/26/2024 12:27:24 PM Resent: 12/26/2024 1:29:33 PM Viewed: 12/26/2024 2:08:42 PM Signed: 12/26/2024 2:08:49 PM

In Person Signer Events	Signature	Timestamp

Editor Delivery Events	Status	Timestamp

Agent Delivery Events	Status	Timestamp

Intermediary Delivery Events	Status	Timestamp

Certified Delivery Events	Status	Timestamp

Carbon Copy Events	Status	Timestamp

Witness Events	Signature	Timestamp

Notary Events	Signature	Timestamp

Envelope Summary Events	Status	Timestamps
Envelope Sent	Hashed/Encrypted	12/26/2024 9:18:36 AM
Certified Delivered	Security Checked	12/26/2024 2:08:42 PM
Signing Complete	Security Checked	12/26/2024 2:08:49 PM
Completed	Security Checked	12/26/2024 2:08:49 PM

Payment Events	Status	Timestamps

Electronic Record and Signature Disclosure

ELECTRONIC RECORD AND SIGNATURE DISCLOSURE

A. ELECTRONIC RECORD AND SIGNATURE DISCLOSURE (ERSD)

From time to time, New Mexico General Services Department (GSD), on behalf of the State of New Mexico (SONM), may be required by law to provide you with certain written notices or disclosures. Stated below are the terms and conditions for GSD's providing you such notices and disclosures electronically through the DocuSign system. Please read this information carefully. If you are able to access this information electronically and agree to **this Electronic Record and Signature Disclosure (ERSD)**, please confirm your agreement by selecting the check-box next to "I agree to use electronic records and signatures" before clicking "CONTINUE" within the DocuSign system.

B. Obtaining paper copies

At any time up to twenty (20) calendar days following your use of DocuSign to electronically sign a document, you may request a paper copy of any record provided or made available electronically to you by GSD. You will have the ability to download and print documents SONM sends you through the DocuSign system during and immediately after the signing session and, if you elect to create a DocuSign account, you may access the documents for a twenty (20) calendar day period after such documents are first sent to you. Following the twenty (20) day period, if you want GSD to send you paper copies of any such documents from GSD's office, you will be charged a $1.00 per-page fee plus postage. You may request delivery of such paper copies from GSD by following the procedure stated in Section H, below.

C. Withdrawing your consent

If you decide to receive notices and disclosures from GSD electronically, you may at any time change your mind and inform GSD you want to receive required notices and disclosures only in paper format. The procedure concerning how you may inform GSD of your decision to receive future notices and disclosures in paper format as well as withdraw your consent to receive notices and disclosures electronically is stated in Section D, immediately below.

D. Consequences of changing your mind

If you elect to receive required notices and disclosures only in paper format, it will slow the speed with which GSD will be able to complete certain steps in specific transactions and deliver paper copies to you. GSD will need: (1) to send the required notices or disclosures to you in paper format; and (2) wait until GSD receives your acknowledgment of your receipt of such paper notices or disclosures. Further, you will no longer be able to use the DocuSign system to receive required notices and consents electronically from SONM or to electronically sign documents generated and sent to you from SONM.

E. All notices and disclosures will be sent to you electronically

Unless you inform GSD otherwise according to these procedures, GSD will electronically provide you through the DocuSign system all required notices, disclosures, authorizations, acknowledgements and other documents that are required to be provided or made available to you during the course of your electronic signature relationship with SONM. To reduce the possibility of inadvertent non-receipt, GSD prefers to provide all required notices and disclosures by the same method and to the same email or physical address that you furnish to GSD. Thus, you may receive the disclosures and notices electronically or in paper form. If you do not agree with this procedure, please inform GSD according to the procedures stated in Section I, below. Please also refer to Section D, immediately above, which states the consequences resulting from your declination of electronic delivery of notices and disclosures.

F. How to contact GSD:

You may inform General Services Department (GSD) of any changes you select regarding State Purchasing Division's (SPD) electronic communications with you, to request paper copies of certain information from SPD, and to withdraw your prior consent to receive notices and disclosures electronically by emailing your request(s) to SPD at: *GSD.SPDinfo@state.nm.us*

G. To advise SPD of your new email address

To inform SPD of a change in the email address to which SPD sends you notices and disclosures electronically, you must send an email to SPD at *GSD.SPDinfo@state.nm.us* and in the body of such request you must include your previous and new email addresses.

H. To request paper copies from SPD

To request delivery of paper copies of electronic notices and disclosures that DocuSign and/or SPD have previously provided to you, you must send an email to SPD at *GSD.SPDinfo@state.nm.us* and in the body of your email request state your email address, full name, mailing address, and telephone number. SPD will charge you a $1.00 per page copy fee plus postage.

I. To withdraw your consent with SPD

To inform SPD that you no longer wish to receive notices and disclosures in electronic format you may:

(1) Decline to sign a document from within a signing session, and on the subsequent page, select the check-box indicating you wish to withdraw your consent, or you may:

(2) Send SPD an email to *GSD.SPDinfo@state.nm.us* and in the body of your request state your email address, full name, mailing address, and telephone number.

J. Required hardware and software

The minimum system requirements for using the DocuSign system may change over time. The current DocuSign system requirements may be found at:
https://support.docusign.com/guides/signer-guide-signing-system-requirements

K. Acknowledging your access and consent to receive and sign documents electronically

To confirm that you are able to electronically access the information contained in this Electronic Record and Signature Disclosure (ERSD), please confirm that you have: (1) read this ERSD, and either: (2) you are able to print on paper or electronically save this ERSD for your future reference and access; or (3) you are able to email this ERSD to an email address where you will be able to print this ERSD on paper and/or save this ERSD for your future reference and access. Further, if you consent to receiving notices and disclosures from DocuSign and/or SPD exclusively in electronic format, then select the check-box next to "I agree to use electronic records and signatures," before you click "CONTINUE" within the DocuSign system.

By selecting the check-box next to "I agree to use electronic records and signatures," you confirm that:

- You have read this Electronic Record and Signature Disclosure (ERSD); and
- You can print this ERSD on paper, or you can save and/ or send this ERSD to a location where you can print this ERSD, for your future reference and access; and
- Until or unless you notify SPD as stated in this ERSD, you consent to exclusively receive through electronic means all notices, disclosures, authorizations, acknowledgements, and other documents that are required to be provided or made available to you by SPD during the course of your electronic signature relationship with SPD.

DocuSign Envelope ID: E0365BB0-9F8D-4B71-AA3D-06C8EEDCCDE7

State of New Mexico
General Services Department
Purchasing Division

Statewide Price Agreement Amendment

Awarded Vendor:
2 Vendors

Number**: 40-00000-23-00034**

Amendment No.**: One**

Term**: December 29, 2023 – December 28, 2024**

Ship To:
All State of New Mexico agencies, commissions, institutions, political subdivisions and local public bodies allowed by law.

Invoice:
As Requested at Time of Order

Procurement Specialist**: Tami Concha** JC

Telephone No.**: (505) 660-3671**

Email: **Tami.Concha@gsd.nm.gov**

Title**: General Construction Services**

This amendment is to be attached to the respective Price Agreement and become a part thereof.

To include Vendor ID Numbers for Vendors (BK) 0000177821 S&G Construction, LLC and (BP) 0000178262 Villalobos Builders, LLC.

Except as modified by this amendment, the provisions of the Price Agreement shall remain in full force and effect.

Accepted for the State of New Mexico

Dorothy Mendonca

Date: 3/27/2024

Dorothy Mendonca
New Mexico State Purchasing Agent

DocuSign

Certificate Of Completion

Envelope Id: E0365BB09F8D4B71AA3D06C8EEDCCDE7
Status: Completed
Subject: Please DocuSign: 40-00000-23-00034 General Construction A001
Source Envelope:
Document Pages: 1
Signatures: 1
Envelope Originator:
Certificate Pages: 5
Initials: 2
Tami Concha
AutoNav: Enabled
1100 S Saint Francis Dr
EnvelopeId Stamping: Enabled
Santa Fe, NM 87502
Time Zone: (UTC-07:00) Mountain Time (US & Canada)
Tami.Concha@gsd.nm.gov
IP Address: 164.64.62.10

Record Tracking

Status: Original
3/27/2024 1:49:34 PM
Holder: Tami Concha
Tami.Concha@gsd.nm.gov
Location: DocuSign
Security Appliance Status: Connected
Pool: StateLocal
Storage Appliance Status: Connected
Pool: GSD
Location: DocuSign

Signer Events	Signature	Timestamp
Michael Saavedra Michael.Saavedra@gsd.nm.gov IT and Const. Bureau Chief New Mexico General Services Security Level: Email, Account Authentication (None), Login with SSO **Electronic Record and Signature Disclosure:** Accepted: 6/4/2020 11:04:51 AM ID: 9cac1b3e-4279-4c8f-b2b4-c607ea9821d8	MS Signature Adoption: Pre-selected Style Using IP Address: 164.64.62.10	Sent: 3/27/2024 1:51:09 PM Viewed: 3/27/2024 1:51:34 PM Signed: 3/27/2024 1:51:46 PM
Tami Concha tami.concha@gsd.nm.gov Const. Supervisor New Mexico General Services, State Purchasing Division Security Level: Email, Account Authentication (None) **Electronic Record and Signature Disclosure:** Not Offered via DocuSign	JC Signature Adoption: Pre-selected Style Using IP Address: 164.64.62.10	Sent: 3/27/2024 1:51:47 PM Viewed: 3/27/2024 1:52:02 PM Signed: 3/27/2024 1:52:07 PM
Dorothy Mendonca dorothy.mendonca@gsd.nm.gov SPD Division Director / State Purchasing Agent General Services Department Signing Group: 35000 - State Purchasing Agent Security Level: Email, Account Authentication (None) **Electronic Record and Signature Disclosure:** Accepted: 4/14/2023 7:24:59 AM ID: 51f6380f-50f7-4227-afb5-572b373dfb7c	Dorothy Mendonca Signature Adoption: Pre-selected Style Using IP Address: 164.64.62.10	Sent: 3/27/2024 1:52:08 PM Viewed: 3/27/2024 1:54:18 PM Signed: 3/27/2024 1:54:22 PM

In Person Signer Events	Signature	Timestamp

Editor Delivery Events	Status	Timestamp

Agent Delivery Events	Status	Timestamp

Intermediary Delivery Events	Status	Timestamp

Certified Delivery Events	Status	Timestamp

Carbon Copy Events	Status	Timestamp

Witness Events	Signature	Timestamp

Notary Events	Signature	Timestamp

Envelope Summary Events	Status	Timestamps
Envelope Sent	Hashed/Encrypted	3/27/2024 1:51:09 PM
Certified Delivered	Security Checked	3/27/2024 1:54:18 PM
Signing Complete	Security Checked	3/27/2024 1:54:22 PM
Completed	Security Checked	3/27/2024 1:54:22 PM

Payment Events	Status	Timestamps

Electronic Record and Signature Disclosure

ELECTRONIC RECORD AND SIGNATURE DISCLOSURE

A. ELECTRONIC RECORD AND SIGNATURE DISCLOSURE (ERSD)

From time to time, New Mexico General Services Department (GSD), on behalf of the State of New Mexico (SONM), may be required by law to provide you with certain written notices or disclosures. Stated below are the terms and conditions for GSD's providing you such notices and disclosures electronically through the DocuSign system. Please read this information carefully. If you are able to access this information electronically and agree to **this Electronic Record and Signature Disclosure (ERSD)**, please confirm your agreement by selecting the check-box next to "I agree to use electronic records and signatures" before clicking "CONTINUE" within the DocuSign system.

B. Obtaining paper copies

At any time up to twenty (20) calendar days following your use of DocuSign to electronically sign a document, you may request a paper copy of any record provided or made available electronically to you by GSD. You will have the ability to download and print documents SONM sends you through the DocuSign system during and immediately after the signing session and, if you elect to create a DocuSign account, you may access the documents for a twenty (20) calendar day period after such documents are first sent to you. Following the twenty (20) day period, if you want GSD to send you paper copies of any such documents from GSD's office, you will be charged a $1.00 per-page fee plus postage. You may request delivery of such paper copies from GSD by following the procedure stated in Section H, below.

C. Withdrawing your consent

If you decide to receive notices and disclosures from GSD electronically, you may at any time change your mind and inform GSD you want to receive required notices and disclosures only in paper format. The procedure concerning how you may inform GSD of your decision to receive future notices and disclosures in paper format as well as withdraw your consent to receive notices and disclosures electronically is stated in Section D, immediately below.

D. Consequences of changing your mind

If you elect to receive required notices and disclosures only in paper format, it will slow the speed with which GSD will be able to complete certain steps in specific transactions and deliver paper copies to you. GSD will need: (1) to send the required notices or disclosures to you in paper format; and (2) wait until GSD receives your acknowledgment of your receipt of such paper notices or disclosures. Further, you will no longer be able to use the DocuSign system to receive required notices and consents electronically from SONM or to electronically sign documents generated and sent to you from SONM.

E. All notices and disclosures will be sent to you electronically

Unless you inform GSD otherwise according to these procedures, GSD will electronically provide you through the DocuSign system all required notices, disclosures, authorizations, acknowledgements and other documents that are required to be provided or made available to you during the course of your electronic signature relationship with SONM. To reduce the possibility of inadvertent non-receipt, GSD prefers to provide all required notices and disclosures by the same method and to the same email or physical address that you furnish to GSD. Thus, you may receive the disclosures and notices electronically or in paper form. If you do not agree with this procedure, please inform GSD according to the procedures stated in Section I, below. Please also refer to Section D, immediately above, which states the consequences resulting from your declination of electronic delivery of notices and disclosures.

F. How to contact GSD:

You may inform General Services Department (GSD) of any changes you select regarding State Purchasing Division's (SPD) electronic communications with you, to request paper copies of certain information from SPD, and to withdraw your prior consent to receive notices and disclosures electronically by emailing your request(s) to SPD at: *GSD.SPDinfo@state.nm.us*

G. To advise SPD of your new email address

To inform SPD of a change in the email address to which SPD sends you notices and disclosures electronically, you must send an email to SPD at *GSD.SPDinfo@state.nm.us* and in the body of such request you must include your previous and new email addresses.

H. To request paper copies from SPD

To request delivery of paper copies of electronic notices and disclosures that DocuSign and/or SPD have previously provided to you, you must send an email to SPD at *GSD.SPDinfo@state.nm.us* and in the body of your email request state your email address, full name, mailing address, and telephone number. SPD will charge you a $1.00 per page copy fee plus postage.

I. To withdraw your consent with SPD

To inform SPD that you no longer wish to receive notices and disclosures in electronic format you may:

(1) Decline to sign a document from within a signing session, and on the subsequent page, select the check-box indicating you wish to withdraw your consent, or you may:

(2) Send SPD an email to *GSD.SPDinfo@state.nm.us* and in the body of your request state your email address, full name, mailing address, and telephone number.

J. Required hardware and software

The minimum system requirements for using the DocuSign system may change over time. The current DocuSign system requirements may be found at:
https://support.docusign.com/guides/signer-guide-signing-system-requirements

K. Acknowledging your access and consent to receive and sign documents electronically

To confirm that you are able to electronically access the information contained in this Electronic Record and Signature Disclosure (ERSD), please confirm that you have: (1) read this ERSD, and either: (2) you are able to print on paper or electronically save this ERSD for your future reference and access; or (3) you are able to email this ERSD to an email address where you will be able to print this ERSD on paper and/or save this ERSD for your future reference and access. Further, if you consent to receiving notices and disclosures from DocuSign and/or SPD exclusively in electronic format, then select the check-box next to "I agree to use electronic records and signatures," before you click "CONTINUE" within the DocuSign system.

By selecting the check-box next to "I agree to use electronic records and signatures," you confirm that:

- You have read this Electronic Record and Signature Disclosure (ERSD); and
- You can print this ERSD on paper, or you can save and/ or send this ERSD to a location where you can print this ERSD, for your future reference and access; and
- Until or unless you notify SPD as stated in this ERSD, you consent to exclusively receive through electronic means all notices, disclosures, authorizations, acknowledgements, and other documents that are required to be provided or made available to you by SPD during the course of your electronic signature relationship with SPD.

DocuSign Envelope ID: 9C0D0BCE-1F94-4323-9C4D-6BA4D233D2D9

State of New Mexico
General Services Department

Statewide Price Agreement

Awarded Vendor:
51 Awarded Vendors, See Pages 6-14 for Detail

Ship To:
All State of New Mexico agencies, commissions, institutions, political subdivisions and local public bodies allowed by law.

Invoice:
As Requested at Time of Order

Price Agreement Number**:** **40-00000-23-00034**

Payment Terms**:** **Net 30**

F.O.B.**:** **Destination**

Delivery**:** **As Requested**

JC

Procurement Specialist**:** **Tami Concha**

Telephone No.**:** **(505) 660-3671**

Email: **Tami.Concha@gsd.nm.gov**

Title**:** **General Construction Services**

Term**:** **December 29, 2023 thru December 28, 2024**

This Statewide Price Agreement is made subject to the "terms and conditions" as indicated on subsequent pages.

Accepted for the State of New Mexico

Natalie Martinez

Date: 12/29/2023

Dorothy Mendonca
New Mexico State Purchasing Agent

x **This Agreement was signed on behalf of the State Purchasing Agent**

Purchasing Division: 1100 St. Francis Drive, Santa Fe, NM 87505; PO Box 6850, Santa Fe, NM 87502 (505) 827-0472

MS

DocuSign Envelope ID: 9C0D0BCE-1F94-4323-9C4D-6BA4D233D2D9

Terms and Conditions

(Unless otherwise specified)

1. **General:** When the State Purchasing Agent or his/her designee issues a purchase document in response to the Vendor's bid, a binding contract is created.

2. **Variation in Quantity:** No variation in the quantity of any item called for by this order will be accepted unless such variation has been caused by conditions of loading, shipping, packing or allowances in manufacturing process and then only to the extent, if any, specified in this order.

3. **Assignment:**

a. Neither the order, nor any interest therein, nor any claim thereunder, shall be assigned or transferred by the Vendor, except as set forth in Subparagraph 3b or as expressly authorized in writing by the State Purchasing Agent or his/her designee. No such assignment or transfer shall relieve the Vendor from the obligations and liabilities under this order.

b. Vendor agrees that any and all claims for overcharge resulting from antitrust violations which are borne by the State as to goods, services, and materials purchased in connection with this bid are hereby assigned to the State.

4. **State Furnished Property:** State furnished property shall be returned to the State upon request in the same condition as received except for ordinary wear, tear and modifications ordered hereunder.

5. **Discounts:** Prompt payment discounts will not be considered in computing the low bid.

6. **Inspection:** Final inspection and acceptance will be made at the destination. Supplies rejected at the destination for nonconformance with specifications shall be removed at the Vendor's risk and expense, promptly after notice of rejection.

7. **Inspection of Plant:** The State Purchasing Agent or his/her designee may inspect, at any reasonable time, the part of the Contractor's, or any subcontractor's plant or place of business, which is related to the performance of this contract.

8. **Commercial Warranty:** The Vendor agrees that the supplies or services furnished under this order shall be covered by the most favorable commercial warranties the Vendor gives for such to any customer for such supplies or services. The rights and remedies provided herein shall extend to the State and are in addition to and do not limit any rights afforded to the State by any other clause of this order. **Vendor agrees not to disclaim warranties of fitness for a particular purpose of merchantability.**

9. **Taxes:** The unit price shall exclude all state taxes.

10. **Packing, Shipping and Invoicing:**

a. The State's purchasing document number and the Vendor's name, user's name and location shall be shown on each packing and delivery ticket, package, bill of lading and other correspondence in connection with the shipments. The user's count will be accepted by the Vendor as final and conclusive on all shipments not accompanied by a packing ticket.

b. The Vendor's invoice shall be submitted duly certified and shall contain the following information: order number, description of supplies or services, quantities, unit price and extended totals. Separate invoices shall be rendered for each and every complete shipment.

c. Invoices must be submitted to the using agency and NOT the State Purchasing Agent.

11. **Default:** The State reserves the right to cancel all or any part of this order without cost to the State, if the Vendor fails to meet the provisions of this order and, except as otherwise provided herein, to hold the Vendor liable for any excess cost occasioned by the State due to the Vendor's default. The Vendor shall not be liable for any excess costs if failure to perform the order arises out of causes beyond the control and without the fault or negligence of the Vendor, such causes include but are not restricted to, acts of God or the public enemy, acts of the State or Federal Government, fires, floods, epidemics, quarantine restrictions, strikes, freight embargoes, unusually severe weather and defaults of subcontractors due to any of the above, unless the State shall determine that the supplies or services to be furnished by

DocuSign Envelope ID: 9C0D0BCE-1F94-4323-9C4D-6BA4D233D2D9

the subcontractor were obtainable from other sources in sufficient time to permit the Vendor to meet the required delivery scheduled. The rights of the State provided in this paragraph shall not be exclusive and are in addition to any other rights now being provided by law or under this order.

12. **Non-Collusion:** In signing this bid the Vendor certifies he/she has not, either directly or indirectly, entered into action in restraint of free competitive bidding in connection with this offer submitted to the State Purchasing Agent or his/her designee.

13. **Nondiscrimination:** Vendor doing business with the State of New Mexico must be in compliance with the Federal Civil Rights Act of 1964 and Title VII of the Act (Rev. 1979) and the Americans with Disabilities Act of 1990 (Public Law 101-336).

14. **The Procurement Code:** Sections 13-1-28 through 13-1-199 NMSA 1978, imposes civil and criminal penalties for its violation. In addition the New Mexico criminal statutes impose felony penalties for bribes, gratuities and kickbacks.

15. **Items:** All bid items are to be NEW and of most current production, unless otherwise specified.

16. **Payment for Purchases:** Except as otherwise agreed to: late payment charges may be assessed against the user state agency in the amount and under the conditions set forth in Section 13-1-158 NMSA 1978.

17. **Workers' Compensation:** The Contractor agrees to comply with state laws and rules pertaining to Workers' Compensation benefits for its employees. If the Contractor fails to comply with Workers' Compensation Act and applicable rules when required to do so, this Agreement may be terminated by the contracting agency.

18. **Submission of Bid:** Bids must be submitted in a sealed envelope with the bid number and opening date clearly indicated on the bottom left hand side of the front of the envelope. Failure to label bid envelope will necessitate the premature opening of the bid in order to identify the bid number.

19. **Contractor Personnel**: Personnel proposed in the Contractor's written bid to the Procuring Agency are considered material to any work performed under this Price Agreement. Once a Purchase Order or contract has been executed, no changes of personnel will be made by the Contractor without prior written consent of the Procuring Agency. Replacement of any Contractor personnel, if approved, shall be with personnel of equal ability, experience, and qualifications. The Contractor will be responsible for any expenses incurred in familiarizing the replacement personnel to insure their being productive to the project immediately upon receiving assignments. Approval of replacement personnel shall not be unreasonably withheld. The Procuring Agency shall retain the right to request the removal of any of the Contractor's personnel at any time.

20. **Subcontracting:** The Contractor shall not subcontract any portion of the Price Agreement without the prior written approval of the Procuring Agency. No such subcontracting shall relieve the Contractor from its obligations and liabilities under this Price Agreement, nor shall any subcontracting obligate payment from the Agency.

21. **Records and Audit:** The Contractor shall maintain detailed time and expenditure records that indicate the date, time, nature, and cost of services rendered during this Price Agreement's term and effect, and retain them for a period of three (3) years from the date of final payment under this Price Agreement. The records shall be subject to inspection by the Agency, State Purchasing Division, Department of Finance and Administration, and for Information Technology contracts, State Chief Information Officer. The Agency shall have the right to audit billings, both before and after payment. Payment for services under this Price Agreement shall not foreclose the right of the Agency to recover excessive or illegal payments.

22. **Subcontracts:** The foregoing requirements for Contractor Personnel, Subcontracting, and Audit shall be inserted into all subcontracts from the prime contractor to the subcontractor.

New Mexico Employees Health Coverage

A. If Contractor has, or grows to, six (6) or more employees who work, or who are expected to work, an average of at least 20 hours per week over a six (6) month period during the term of the contract, Contractor certifies, by signing this agreement, to have in place, and agrees to maintain for the term of the contract, health insurance for its New Mexico

DocuSign Envelope ID: 9C0D0BCE-1F94-4323-9C4D-6BA4D233D2D9

Employees and offer that health insurance to its New Mexico Employees if the expected annual value in the aggregate of any and all contracts between Contractor and the State exceeds $250,000 dollars.

B. Contractor agrees to maintain a record of the number of its New Mexico Employees who have (a) accepted health insurance; (b) declined health insurance due to other health insurance coverage already in place; or (c) declined health insurance for other reasons. These records are subject to review and audit by a representative of the state.

C. Contractor agrees to advise all of its New Mexico Employees of the availability of State publicly financed health care coverage programs by providing each of its New Mexico Employees with, as a minimum, the following web site link to additional information: https://bewellnm.com.

D. For purposes of this Paragraph, the following terms have the following meanings:

(1) "New Mexico Employee" means any resident of the State of New Mexico employed by Contractor who performs the majority of the employee's work for Contractor within the State of New Mexico, regardless of the location of Contractor's office or offices; and

(2) "offer" means to make available, without unreasonable restriction, enrollment in one or more health coverage plans and to actively seek and encourage participation in order to achieve the goals of Executive Order 2007-049. This could include State publicly financed public health coverage programs such as *Insure New Mexico!*

Statewide Price Agreement

Article I – Statement of Work
Under the terms and conditions of this Price Agreement all State of New Mexico agencies, commissions, institutions, political subdivisions and local public bodies allowed by law may issue orders for items and/or services described herein. The terms and conditions of this Price Agreement shall form a part of each order issued hereunder.

The items and/or services to be ordered shall be as listed under Article IX - Price Schedule. All orders issued hereunder will bear both an order number and this Price Agreement number. It is understood that no guarantee or warranty is made or implied by the New Mexico State Purchasing Agent, his/her designee or the user that any order for any definite quantity will be issued under this Price Agreement. The Contractor is required to accept the order and furnish the items and/or services in accordance with the articles contained hereunder for the quantity of each order.

Article II – Term
The term of this Price Agreement, for issuance of orders, shall be as indicated in the specifications.

Article III – Specifications
Items and/or services furnished hereunder shall conform to the requirements of specifications and/or drawings applicable to items listed under Article IX-Price Schedule. Orders issued against this schedule will show the applicable Price Agreement item(s), number(s), and price(s); however they may not describe the item(s) fully.

Article IV – Shipping and Billing Instructions
Contractor shall ship in accordance with the following instructions: Shipment shall be made only against specific orders which the user may place with the Contractor during the term; The Contractor shall enclose a packing list with each shipment listing the order number, price agreement number and the commercial parts number (if any) for each item; Delivery shall be made as indicated on page1. If vendor is unable to meet stated delivery the State Purchasing Agent or his/her designee must be notified.

Article V – Termination
The Agency may terminate this Agreement for convenience or cause. The Contractor may only terminate this Agreement based upon the Agency's uncured, material breach of this Agreement. Contractor shall give Agency written notice of termination at least thirty (30) days prior to the intended date of termination, which notice shall (i) identify all the Agency's material breaches of this Agreement upon which the termination is based and (ii) state what the Agency must do to cure such material breaches. Contractor's notice of termination shall only be effective (i) if the Agency does not cure all material breaches within the thirty (30) day notice period or (ii) in the case of material breaches that cannot be cured within thirty (30) days, the Agency does not, within the thirty (30) day notice period, notify the Contractor of its intent to cure and begin with

DocuSign Envelope ID: 9C0D0BCE-1F94-4323-9C4D-6BA4D233D2D9

due diligence to cure the material breach. Termination of this Contract, however, shall not affect any outstanding orders. This provision is not exclusive and shall not waive other rights and remedies afforded either party in the event of breach of contract or default. In such instances the contract may be cancelled effective immediately.

Article VI – Amendment
This Price Agreement may be amended by mutual agreement of the New Mexico State Purchasing Agent or his/her designee and the Contractor upon written notice by either party to the other. An amendment to this Price Agreement shall not affect any outstanding orders issued prior to the effective date of the amendment as mutually agreed upon, and as published by the New Mexico State Purchasing Agent or his/her designee. Amendments affecting price adjustments and/or the extension of a price agreement expiration date are not allowed unless specifically provided in the bid and price agreement specifications.

Article VII – Indemnity Clause
Contractor shall indemnify and hold harmless the State, its officers and employees, against liability, claims, damages, losses or expenses arising out of bodily injury to persons or damage to properties caused by, or resulting from Contractor's, and/or its employees, own negligent act or omission while Contractor, and/or its employees, perform or fails to perform its obligations and duties under the Terms and Conditions of this agreement. This save harmless and indemnification clause is subject to the immunities, provisions, and limitations of the Tort Claims Act (Section 41-4-1, et seq., N.M.S.A. 1978 comp. and Section 57-7-1 N.M.S.A. 1878 comp. and any amendments thereto.

It is specifically agreed between the parties executing this agreement that it is not intended by any of the provisions of any part of the agreement to create in the public or any member thereof a third party beneficiary or to authorize anyone not a party to the agreement to maintain a suit(s) for wrongful death(s), bodily and/ or personal injury(s) to person(s), damage(s) to property(ies) and/or any other claim(s) whatsoever pursuant to the provisions of this agreement.
Vendor shall provide all insurance necessary to employees on the work site, including but not limited to Worker's Compensation.

Article VIII – Issuance or Orders
Only written signed orders are valid under this Price Agreement.

Article IX – Packing (if applicable)
Packing shall be in conformance with standard commercial practices.

Article X – Price Schedule
Prices as listed in the price schedule hereto attached are firm.

DocuSign Envelope ID: 9C0D0BCE-1F94-4323-9C4D-6BA4D233D2D9

Awarded Vendors:

(AA) 0000073450
3 B Builders, Inc.
1770 Hamilton Ln
Bosque Farms, NM 87068
Matthew Budagher (505) 553-0544
matt.3bbuilders@gmail.com

Payment Term: Net 30
Delivery: As Requested
Public Works: 3039120140518
License: 352730

(AB) 0000053415
Advanced Environmental Solutions, Inc.
2318 Roldan Drive
Belen, New Mexico 87002
Andy Saiz (505) 450-8953
asaiz@aesnm.com

Payment Term: Net 30 Days
Delivery: Per Contract Specs
Public Works: 74620050716
License: 83422

(AC) 0000107401
All Rite Construction, Inc.
dba RiteCon
PO Box 67904
Albuquerque, NM 87193
Meshach Alvarado (505) 344-7663
meschach@ritecon.com

Payment Term: Net 30
Delivery: FOB
Public Works: 3057620140914
License: 82136

(AD) 0000009253
Allied Electric, Inc.
PO Box 28430
Santa Fe, NM 87592-8430
George Maestas (505) 660-1327
george@alliednm.com

Payment Term: Net 30
Delivery: As Requested by owner
Public Works: 1365320100416
License: 351269

(AE) 0000054601
AnchorBuilt, Inc.
PO Box 27688
Albuquerque, NM 87125
Raymond Zamora 505.342.2452
ray.zamora@anchorbuilt.com

Payment Term: Net 30
Delivery: Destination
Public Works: 2492520120713
License: 81458

DocuSign Envelope ID: 9C0D0BCE-1F94-4323-9C4D-6BA4D233D2D9

(AF) 0000046277
B & D Industries, Inc.
PO Box 561617
Denver, CO 80256
Jamie Westerfield 505-332-9841
jwesterfield@banddindustries.com

Payment Term: Net 30
Delivery: F.O.B. Destination
Public Works: 191702011629
License: 1426

(AG) 0000083208
Boyd Construction, LLC
1000 Cordova Pl. #987
Santa Fe, NM 87505
Lawrence Boyd 505 699-4787
Lboyd1888@aol.com

Payment Term: Net 30
Delivery: 1000 Cordova Pl 987 Santa Fe, NM 87505
Public Works: 26114334852023
License: 411057

(AH) 0000051994
Classic Industries, Inc.
P.O. Box 434
Dona Ana, NM 88032
Richard J. Lara 575-523-2053
office@classicindincnm.com

Payment Term: Net 30
Delivery: As requested per requirements per award
Public Works: 897720090125
License: 55595

(AI) 0000174779
Colt Builders, Inc.
5304 Raton HWY
Des Moines, New Mexico 88418
Lonnie Cruz 505-850-3312
lonnie@coltbuildersinc.com

Payment Term: Net 30
Delivery: Destination
Public Works: 28141371662017
License: 92919

(AJ) 0000138100
Consolidated Builders of NM, LLC
PO Box 26785
Albuquerque, NM 87125
Manuel Apodaca 505 873 6139
consolidatedbuilders@comcast.net

Payment Term: Net 30
Delivery: 116 Veranda Rd NW
Albuquerque, NM 87107
Public Works: 2548820121019
License: 59613

(AK) 0000170527
Cordova Contracting & Development, LLC
7411 Hancock Ct. NE
Albuquerque, NM 87109
Mark A. Cordova (505) 243-9675
purchasing@cordovallc.com

Payment Term: Net 30
Delivery: As requested.
Public Works: 25224592712018
License: 85391

DocuSign Envelope ID: 9C0D0BCE-1F94-4323-9C4D-6BA4D233D2D9

(AL) 0000116075
Davenport Construction Management LLC
141 Camino de las Crucitas
Santa Fe NM 87501
Mitchel Davenport 505-660-7105
mitch@dcmnm.com

Payment Term: Net 30
Delivery: 3201 Mercantile Court, Suite A
Santa Fe NM 87507
Public Works: 2901220130531
License: 369676

(AM) 0000170503
Elite Communications & Construction LLC
1950 Bosque Farms Blvd
Bosque Farms, NM 87068
Gabe Trujillo 505-295-8000
gabe@elitenm.com

Payment Term: Net 30
Delivery: As requested, job site, or yard location at
1950 Bosque Farms Blvd
Bosque Farms NM 87068
Public Works: 28148871042020
License: 391781

(AN) 0000049445
ESA Construction, Inc.
3435 Girard Blvd. NE
Albuquerque, NM 87107
Steven C. Pannell 505-884-2171 X102
spannell@esaconstruction.com

Payment Term: Net 30
Delivery: As required by contract or purchase order.
Public Works: 13420060701
License: 28493

(AO) 0000043596
First Mesa Construction, Inc.
PO Box 92258
Albuquerque, NM 87199-2258
Scott Butterbaugh (505) 250-1468
scott@firstmesa.net

Payment Term: Net 30
Delivery: As Requested
Public Works: 2545020121012
License: 59346

(AP) 0000086357
Four Winds Mechanical HTC/AC
8915 Adams ST NE, Suite B
Albuquerque, NM 87113
Chualing "Lynn" Armijo 505-908-0090
lynn@4windsmechanical.com

Payment Term: Net 30
Delivery: 24 hours
Public Works: 2885820130507
License: 82333

(AQ) 0000049692
Franken Construction Company, Inc.
1025 Douglas Avenue
Las Vegas, NM 87701
Brent Franken 505-429-1962
brentfranken@frankenconstruction.com

Payment Term: Net 30
Delivery: Contractors Yard or Jobsite Address
Public Works: 3045220140628
License: 7750

DocuSign Envelope ID: 9C0D0BCE-1F94-4323-9C4D-6BA4D233D2D9

(AR) 0000154826
Fulcrum Contracting LLC
5400 Sanban Drive
Las Cruces, NM 88005
Robert Macias 575-496-2802
robert@fulcrum-contracting.com

Payment Term: Net 30
Delivery: As Requested
Public Works: 28522410262020
License: 402807

(AS) 0000090285
GM Emulsion LLC
5935 Agua Fria Street,
Santa Fe, NM 87507
Fred Marquez 505-471-9981
fred@gmemulsion.com

Payment Term: Net 30
Delivery: As Requested
Public Works: 2461320120530
License: 370602

(AT) 0000141388
GME General Building LLC
3225 Richard's Lane Unit A
Santa Fe, New Mexico 87507
Erik Trujillo 505-690-7438
erik@gmegeneralbuilding.com

Payment Term: Net 30
Delivery: As Requested
Public Works: 28325764732018
License: 396923

(AU) 0000125463
Global Maven Enterprises, LLC
Po Box 2016
Las Cruces, NM 88004
Azzam Askar 575-571-7417
customerservice@gmellcusa.com

Payment Term: Net 30
Delivery: 1065 S. Main St. Building D Suite E
Las Cruces, NM 88005
Public Works: 1761920150824
License: 389804

(AV) 0000052470
HEI, Inc.
PO Box 31310
Albuquerque, New Mexico 87190
Jesse Luna 505-880-1819
jluna@heinm.com

Payment Term: Net 30
Delivery: F.O.B. Destination
Public Works: 2495720120723
License: 61439

(AW) 0000046616
Highland Enterprises, Inc.
PO Box 2409
Las Cruces, NM 88004
Mark Hettinga 575-524-3551
hei@highlandnm.com

Payment Term: Net 30
Delivery: As Requested
Public Works: 971920090606
License: 4460

DocuSign Envelope ID: 9C0D0BCE-1F94-4323-9C4D-6BA4D233D2D9

(AX) 0000127038
Illmatic Construction Inc.
520 Barela Lane
Santa Fe, NM 87505
Joann Sandoval 505-920-1951
illmatic505@gmail.com

Payment Term: Net 30
Delivery: as requested
Public Works: 21617625602016
License: 91673

(AY) 0000129254
JRM Construction Co, LLC
2620 Via Berrenda
Santa Fe, NM, 87505
Joe Robert Mendez Jr. 505-920-9768
jrmconstruction65@yahoo.com

Payment Term: Net 30
Delivery: FOB DESTINATION
Public Works: 28112303762022
License: 372261

(AZ) 0000167639
Jaypen Construction LLC
101 B Paseo Nopal
Santa Fe, NM 87507
Jeremy Martinez 505-920-0710
jeremy.jaypenconst@gmail.com

Payment Term: Net 30
Delivery: As Requested
Public Works: 28738509952022
License: 406984

(BA) 0000174921
L Martinez Construction LLC
P.O. Box 662
Santa Cruz, New Mexico 87567
Lionel Martinez (505) 614-6007
llmartinezconst@gmail.com

Payment Term: Net 30
Delivery: As Requested
Public Works: 29214840592023
License: 410900

(BB) 0000111171
LLR Construction, LLC
2015 Wyoming Blvd. NE Suite I
Albuquerque NM 87112
Doug Langley 505-850-4533
doug@llrconstructionnm.com

Payment Term: Net 30
Delivery: 2015 Wyoming Blvd. NE Suite I
Albuquerque NM 87112
Public Works: 3009120130927
License: 371032

(BC) 0000138553
Nine Degrees Construction, LLC
101 Maguey Ct. Suite 2
Sunland Park, NM 88063
Cesar Molina 915-526-8739
cesarm@nine-degrees.com

Payment Term: Net 30
Delivery: Same as remit address
Public Works: 24651036262017
License: 381568

DocuSign Envelope ID: 9C0D0BCE-1F94-4323-9C4D-6BA4D233D2D9

(BD) 0000049258
Northern Mountain Constructors, Inc.
PO Box 348
El Prado, NM 87529
Claire Moore 575-758-4395
claire@nmconstructors.com

Payment Term: Net 30
Delivery: as requested
Public Works: 3046520140706
License: 27983

(BE) 0000114869
Pluma, LLC
6301 4th St. NW Suite 1
Albuquerque, NM 87107
Kodi (505) 345-0755
kodi@plucys.com

Payment Term: Net 30
Delivery: As Requested
Public Works: 1755520150602
License: 387286

(BF) 0000148381
Prestigious Paving, LLC
2706 Chamisal Avenue
Gallup NM 87301
Zane Munoz 505-488-2333
prestigiouspaving@gmail.com

Payment Term: Net 30
Delivery: As Requested
Public Works: 28419195262022
License: 401665

(BG) 0000116761
Prime Builders, LLC
P.O. Box 91480
Albuquerque, NM 87199
Eric Peterson 505-924-0455
epeterson@primebuildersnm.com

Payment Term: Net 30
Delivery: As requested
Public Works: 2496820120723
License: 365323

(BH) 0000132517
R and M Construction, LLC
PO Box 1026
Alcalde, NM 87511
Robert Sanchez 505-927-2027
robert@rmconstructionnm.com

Payment Term: Net 30
Delivery: Email - robert@rmconstructionnm.com
Public Works: 2416920120330
License: 367912

(BI) 0000142264
Red Seven Electric LLC
PO Box 181
Jarales, NM 87023
Manuel Medina 505-859-5414
mmedina@redsevenelectric.com

Payment Term: Net 30
Delivery: As Requested
Public Works: 28211398962018
License: 391745

DocuSign Envelope ID: 9C0D0BCE-1F94-4323-9C4D-6BA4D233D2D9

(BJ) 0000135923
Road Runer Plaster & Drywall, LLC
3272 Ojos De Jo
Santa Fe, NM 87507
Alvaro Ivan Erives 505 670-3426
IvanRoadRunner@live.com

Payment Term: Net 30
Delivery: As requested
Public Works: 22733316402017
License: 367027

(BK) Not in SHARE
S&G Construction, LLC
21 Lumbre Del Sol
Espanola, NM 87532
Sukhwinder Singh 505-603-4969
swscfo@gmail.com

Payment Term: Net 30
Delivery: Job Order Contracting
Public Works: 29220605632023
License: 60248

(BL) 0000009789
SDV Construction, Inc.
8912 Adams St NE
Albuquerque, NM 87113
Paul Farless 505-883-3176
estimating@sdvconstruction.com

Payment Term: Net 30
Delivery: Destination
Public Works: 168920070104
License: 92744

(BM) 0000076453
Sanchez Demolition Inc.
PO Box 721
Bosque, NM 87006
Michael Lovato 505-864-7551
sanchezdemolition@gmail.com

Payment Term: Net 30 days from receipt of invoice
Delivery: 16 Miranda Rd. Veguita, NM 87062
Public Works: 1745120150208
License: 359736

(BN) 0000137030
Sweep Construction
4904 Jefferson St NE Suite E,
Albuquerque, New Mexico, 87109
Sara Petersen 505-881-1461
sweepconstruction@gmail.com

Payment Term: Net 30
Delivery: as requested
Public Works: 2255620110606
License: 369821

(BO) 0000170501
The Aisling Company, LLC
2327 State Rd. 1
Socorro, NM 87801
Casey A. Spurgin 505-871-1000
info@aislingco.com

Payment Term: 21 days after submission
Delivery: As Requested, Scheduled
Emergency response with 24-48 hrs.
Public Works: 28231792042019
License: 393602

DocuSign Envelope ID: 9C0D0BCE-1F94-4323-9C4D-6BA4D233D2D9

(BP) Not in SHARE
Villalobos Builders, LLC
4711 Grand Avenue NE
Albuquerque, NM 87108
Myra E Villalobos (505) 235-9293
villalobosbuildersllc@outlook.com

Payment Term: Net 30
Delivery: As requested
Public Works: 28632742872023
License: 405579

(BQ) 0000051414
WWRC, Inc.
1716 W. 7th
Clovis, NM 88101
Rocky Martin (575) 769-2618
Orders/Sales wwrc@wwrcinc.com

Payment Term: Net 30 days
Delivery: As Requested
Public Works: 100222009703
License: 54124

(BR) 0000009760
Weil Construction, Inc.
3344 Princeton Dr. NE,
Albuquerque, NM 87107
Orders/Sales: (505) 899-3535
c.mcmahan@weilconstruction.com

Payment Term: Net 30
Delivery: As Requested
Public Works: 3027220140401
License: 92233

(BS) 0000052947
Western Mechanical Co.
dba Western Mechanical HVAC & Plumbing
3301 Girard Blvd NE
Albuquerque NM, 87107
Orders/Sales: (505) 341-4458
mike.westernmechanical@gmail.com

Payment Term: 30 Days
Delivery: Email
Public Works: 2888620130507
License: 82364

(BT) 0000050416
White Sands Construction, Inc.
1700 10th Street
Alamogordo, NM 88310
Catlin (575) 437-7816
catlin@whitesandsconstruction.com

Payment Term: Net 30
Delivery: 1700 10th Street Alamogordo, NM 88310
Public Works: 115042009091
License: 50235

DocuSign Envelope ID: 9C0D0BCE-1F94-4323-9C4D-6BA4D233D2D9

(BU) 0000150396
Justin Wilson
dba Wilson Construction Services, LLC
123 Buckboard Trl.
Nogal, NM 88341
Orders/Sales: Christina 303-242-2631
wilsonconstruction2020@gmail.com

Payment Term: Net 30
Delivery: As Requested
Public Works: 28442702582022
License: 401335

(BV) 0000091459
Rogers, Yei
dba Wizer Electric, LLC
6017 Del Carmen Rd NE
Rio Rancho, NM 87144
Gabriel Rodriguez 505-771-4973
gabe.wizerelectric@yahoo.com

Payment Term: Net 30
Delivery: 6017 Del Carmen Rd NE
Rio Rancho, NM 87144
Public Works: 2428320120413
License: 369333

(BW) 0000177783
Young Guns Construction, LLC
3485 Highway 47
Los Lunas, New Mexico 87031
John Trujillo (505) 415-0444
ygc.llc@yahoo.com

Payment Term: Net 30
Delivery: FOB: Destination Delivery: As Required
Public Works: 28508000422023
License: 408709

(BX) 0000012754
FacilityBUILD, Inc.
5904 Florence Ave, NE
Albuquerque, NM 87113
Cameron Kilcup (505) 828-0060
camkilcup@facilitybuild.com

Payment Term: Net 30
Delivery: As Requested
Public Works: 187432011601
License: 88676

(BY) 0000082084
Munoz Corporation
PO Box 850
Gallup, NM 87301
George Munoz (505) 722-6570
munozcorp@yahoo.com

Payment Term: Net 30
Delivery: As Requested
Public Works: 28504398162023
License: 59907

DocuSign Envelope ID: 9C0D0BCE-1F94-4323-9C4D-6BA4D233D2D9

Specifications:
Establish a Statewide Price Agreement for on-call general construction services work by New Mexico licensed contractors to provide miscellaneous repairs, upgrades, improvements and new construction services for facilities and properties throughout the state of New Mexico. This Price Agreement may be utilized by all New Mexico State Agencies, commissions, political subdivisions and local public bodies applicable by law (using agency or local public body).

Term:
The term of this Price Agreement shall be for one (1) year from date of award with the option to extend for a period of two (2) additional years, on a year-to-year basis, by mutual agreement of all parties and approval of the New Mexico State Purchasing Agent at the same price, terms and conditions. This Price Agreement shall not exceed three (3) years.

Compensation Caps:
The total cost of each project, shall not exceed Four Million Dollars ($4,000,000.00). This cap includes all change orders associated with the project. Since NMSA 1978 Section 13-1-154.1 sets the cap thresholds, if modified during the term of this Agreement, any revisions to the NMSA will apply.

Legislation Affecting Price Agreement:
If future legislation affects any terms or conditions of the Price Agreement the Price Agreement may be amended to comply with the legislation.

Insurance:
The Contractor shall provide all insurance necessary for its employees on the project, including, but not limited to, Workman's Compensation Insurance. The Contractor agrees to comply with state laws and rules pertaining to Workers' Compensation Insurance coverage for its employees. If the Contractor fails to comply with the Workers' Compensation Act and applicable rules, when required to do so, this Price Agreement will be cancelled immediately.

Contractor shall indemnify and hold harmless the State and local public body, its officers, and employees, against liability, claims, damages, losses, or expenses arising out of bodily injury to persons or damage to properties caused by, or resulting from, Contractor's and/or its employees, own negligent acts or omissions while Contractor, and/or its employees perform or fail to perform its obligations and duties under the terms and conditions of this Price Agreement. This Save Harmless and Indemnification Clause is subject to the immunities, provisions, and limitations of the Tort Claims Act (Section 41-4-1, et seq., NMSA 1978 Comp. and Section 56-7-1 NMSA 1978 Comp.) and any amendments thereto.

It is specifically agreed between the parties executing this Price Agreement that it is not intended by any of the provisions of any part of the Price Agreement to create the public or any member hereof a third party beneficiary or to authorize anyone not a party to the Price Agreement to maintain a suit for wrongful death, bodily and/or personal injury to persons, damage to properties and/or other claims whatsoever pursuant to the provisions of this Price Agreement.

The Contractor shall provide public liability insurance for the minimum amount of one hundred thousand dollars ($100,000) for damage to or destruction of property arising out of each occurrence; the amount of three hundred thousand dollars ($300,000) to any person for any number of claims arising out of each occurrence for all damages other than property damage as permitted under the New Mexico Tort Claims Act; and the amount of five hundred thousand dollars ($500,000) for all claims arising out of each occurrence. Umbrella or excess liability coverage shall not be considered as any part of the primary coverage.

The vendor shall request from his insurer that the agency or local public body be named "Additional Insured" on an insurance certificate showing the vendor's insurance coverages.

All work covered by this Invitation to Bid shall be in accordance with applicable state laws, the International Building Code (IBC) and New Mexico building codes and is subject to the minimum wage rate determination issued by the New Mexico Department of Workforce Solutions, if applicable.

DocuSign Envelope ID: 9C0D0BCE-1F94-4323-9C4D-6BA4D233D2D9

Wage Rates:
All work covered by this Invitation to Bid shall be in accordance with applicable state laws and is subject to the minimum wage rate determination issued by the Department of Workforce Solutions (DWS), if applicable.

A wage rate decision is required by the Public Works Minimum Wage Act for construction, demolition or renovation purposes on projects costing sixty thousand dollars ($60,000) or more and funded in part by state or local funding. The Contractor agrees to comply with the current prevailing wage rate schedule when applicable. For current wage rates or for additional information, visit: http://www.dws.state.nm.us. The agency or local public body will request a wage rate determination from the DWS.

Bonding:
A one hundred percent (100%) performance bond and a one hundred percent (100%) payment and material bond executed by a surety company authorized to do business in the state of New Mexico will be required of the successful bidder(s) prior to each project over twenty-five thousand dollars ($25,000). Said bonds must be provided to the requesting agency and are to be filed with the agencies purchasing office. Failure to comply shall result in the order being issued to another vendor and the difference being charged back to the awarded Contractor(s). The cost of the bonds may be passed on to the agency or local public body.

A Subcontractor shall provide a performance and payment bond on a public works building project if the subcontractor's contract (to the Contractor) for work to be performed on a project is one hundred and twenty-five thousand dollars ($125,000) or more. Failure of a Subcontractor to provide required bond shall not subject the Owner to any increase in cost due to any substitution of an approved Subcontractor.

Other:
The awarded Contractor shall be responsible for all permits associated with this work as required by the State of New Mexico Construction Industries Division (CID) or the local Authority Having Jurisdiction (AHJ). The CID will issue permits for work performed at state-owned buildings.

Escalation / Reduction Clause:
Contractor shall keep pricing fixed for each year of this Agreement. Thereafter, SPD and the Contractor may adjust pricing no more than once annually through an amendment to the Agreement at the time of Agreement renewal. Contractor shall submit all pricing increase requests to SPD directly or through the agency contact in writing and provide substantiating evidence that each request is based on demonstrable market changes impacting the cost of products. The request must show all proposed increases by line item and include supporting documentation acceptable to SPD (such as a letter from a manufacturer indicating price increases, etc.) SPD's decision on what is acceptable in this context is final and shall be accepted by all parties to the Agreement. ***Requested price increases that exceed 10% will not be accepted*.** **No** price increase may result in a higher profit margin for the Contractor than at the beginning of the initial term of this Agreement. Pricing changes will apply to Agreements and amendments to Agreements entered on and after the effective date of the price change. Price decreases as well as increases shall apply in the same manner. If vendor's prices are reduced for any reason, users shall receive the benefit of such reductions, immediately. Price increases will not be retroactive to orders already in house or backorders. Orders will be filled at the price in effect on the date of receipt of the order by the vendor. To facilitate prompt consideration, all requests for price increase must include all information listed below:

1. Agreement Item Number
2. Current Item Price
3. Proposed New Price
4. Percentage of Increase
5. Mill/Supplier Notification of price increase indicating percentage of increase including reason for increase.

Contractor Note:
No person shall act as a Contractor without a license issued by the Construction Industries Division, classified to cover the type of work to be performed. No bid on a contract shall be submitted unless the Contractor has a valid Contractor's

DocuSign Envelope ID: 9C0D0BCE-1F94-4323-9C4D-6BA4D233D2D9

license issued by the CID to bid and to perform the type of work to be undertaken, as set forth in § 60-13-12, NMSA 1978.

Contractor shall provide the following information:

Contractor's New Mexico license no.: _____
Contractor's classification no.: _____
State tax identification no.: _____
Public Works Registration Number*: _____
*Pursuant to: 13-4-13.1 Public Works Contracts; Registration of Contractors and Subcontractors

When submitting a quote for a specific project valued at more than sixty thousand dollars ($60,000) for any portion of a public works project greater than sixty thousand dollars ($60,000) that is subject to the New Mexico Public Works Act, the Contractor is required to be registered with the Labor and Industrial Division of the Department of Workforce Solutions prior to submitting its quote. The using agency may reject any quote that fails to provide a Public Works Registration Number for the prime Contractor and all other listed Contractors or subcontractors. In order to submit a bid for this invitation to bid the bidder must have an Active registration for the Public Works Act.

The Contractor will be contacted on an as needed, on-call basis to perform work associated with this Price Agreement. A Price Agreement award is without assurance of quantity or dollar amount of work to be performed. Failure to respond to the Using Agency's requests may be grounds for termination of this Price Agreement. Awards for these services will be made on a statewide basis. If the awarded contractor does not wish to travel to other parts of the State, it is acceptable to decline work.

Scope of Work:
Contractors shall provide their cost for performing all the work called for in the Using Agency's scope of work for the project. Projects may be of short or long term duration, throughout the state.

Contractors shall have the technical staff to perform diagnostic services; provide incidental design services as needed; and to provide professionally prepared, stamped drawings, if needed, to obtain installation or construction permits. The Contractor is responsible for obtaining all required licenses, fees and permits required by government agencies to perform the work.

Contractors shall be 'licensed Contractors" capable of providing all coordination, supervision and services required for comprehensive general building construction, renovations, upgrade and improvement projects and to provide new construction services including incidental design. The scope of an individual project may include equipment, fixtures and furniture whether attached or not to the building. It can include site and utility work including landscaping and parking lot/ minor road/ minor bridge work. The utility work can include building power systems such as solar panels, geothermal systems, water sourcing systems, water treatment and waste disposal/treatment systems. It may also include demolition and abatement projects. Identification and abatement of asbestos containing materials (ACM) may be performed under separate contracts. It can also include security and other low voltage installations with related controls and equipment.

Contractors shall provide all materials, labor, equipment and tools required to successfully complete the work requested. The Contractors shall be capable of providing a work force with supervision, adequate to perform work for a forty (40) hour work week during normal working hours with the option of working non normal or overtime hours if required.

Replacement systems and related equipment shall meet current minimum state mandated "Energy Star" energy conservation standards.

Subcontracting of work is allowed and shall be prior approved by the Using Agency. Subcontractors shall have the appropriate current and valid Contractor's licenses for their work. And shall furnish proof upon request.

DocuSign Envelope ID: 9C0D0BCE-1F94-4323-9C4D-6BA4D233D2D9

Furnishing of submittal data for any/all new equipment and materials as well as O&M's when either/or are required, and deemed necessary for the facility is required. Training of site personnel for the proper operation of newly installed equipment/systems and its related controls will be performed and required for completion. This training must be acceptable to the person in charge of the facility.

Replacement mechanical/electrical/plumbing systems and related equipment shall meet current minimum state mandated "Energy Star" energy conservation standards.

The Contractor shall provide all protective coverings necessary to protect existing, adjacent finishes while performing its work. If any damage is encountered during the contractor's work, to other areas, the contractor will be held responsible for repairing any damage done by his employees, subcontractors and vendors.

The Contractor shall, at his own cost, restore any damage to existing, adjacent finishes damaged as a result of performing its work and to make new work inconspicuous with the existing, adjacent finishes.

The Contractor shall provide all clean-up for its operations and control of all construction debris. All work areas shall be maintained in a neat and workmanlike manner. All construction debris shall be removed from the work areas and disposed of at an approved waste disposal site. The Using Agency's trash container for the building shall not be used for disposal of any construction debris.

All work shall be according to current applicable State and National codes. All work shall be in strict compliance with the national and state building mechanical, plumbing, fire and electrical codes including SMACNA, and ASHRAE standards.

Safety shall be of main concern and enforced by the contractor on site and will be periodically inspected by the State's qualified safety personnel. The Contractor shall comply with all local, state and federal laws governing safety, health and sanitation. The on-site Superintendent shall have a minimum OSHA 10 and preferably OSHA 30 card with them at all times when on the jobsite. The Using Agency shall not in any way be responsible for any fines set forth for such violations of codes, OSHA standards or any other governing agency having jurisdiction at the work site. The Contractor shall provide all needed safe guards, safety devices and protective equipment; take any actions necessary to protect the life and health of employees on the job; the safety of the public; and to protect the property of the Using Agency in connection with the performance of the work covered by this Price Agreement. Any work involving disconnect or switching of electrical service to a work area shall utilize LOCKOUT/TAGOUT identification practices.

All personnel working on the project and providing these services shall be experienced and certified in all areas related to this work and required by this Price Agreement. Journeymen level personnel shall have the ability and necessary skills to diagnosis problems and to make the appropriate decisions needed to provide these services.

Contractor's price shall cover all labor costs, tools, equipment, materials, permits, overhead, profit, insurance and any other fees necessary to perform the work called for in the Using Agency's scope of work and drawings for this project. Any equipment required to have licensed operators shall be the responsibility of the contractor before any equipment is turned on at the jobsite. The prices quoted for each project represent the total compensation to be paid by the Using Agency for the goods and/or services provided including any and all labor, equipment, tools, materials, taxes, permits, licenses, or other costs necessary to complete the service or goods provided.

Taxes shall be added by the Contractor to its quote (line item on schedule of values) at the current tax rate at the project's location. As a separate item, the Using Agency shall ensure the appropriate gross receipts tax is added to the Contractor's project proposal and that it is encumbered in the Purchase Order.

The Contractor shall provide all the services needed and called for in the Using Agency's scope of work, in addition to the requirements set forth in this Price Agreement.

DocuSign Envelope ID: 9C0D0BCE-1F94-4323-9C4D-6BA4D233D2D9

Request for Quote (RFQ):
Each project under this Price Agreement will be individually described in a "Request for Quote (RFQ)". The RFQ will describe the scope of work, the duration of the project with the date of Substantial Completion and if there are liquidated damages for not meeting the date of substantial completion. The date of Substantial Completion is the date when the space can be occupied or the Work used/operated and is turned over to the User Agency. Final completion is the date when the project is totally complete, the punch list work complete and the Contractor's final pay application/invoice is approved. The terms and conditions of the Contractor's Statewide Price Agreement will apply to all Purchase Orders which result from the accepted quote in response to the RFQ. The Contractor's written quote will be valid for thirty (30) days, unless otherwise stipulated on the quote.

There will be NO markups allowed. A negotiated fixed fee may be added as a cost for compensation to cover the cost of overhead, profit and any other general expenses as it pertains to the project.

All subcontractor quotes shall be broken down by labor and materials costs and the Contractor shall be allowed a maximum of five percent markup for administrative costs.

The Contractor and its employees agree to cooperate with and to abide by the rules and requirements of the requesting Using Agency to not interfere with the daily operations of the Agency or to jeopardize the health, safety or welfare of the employees or general public conducting business with the Using Agency.

The Using Agency reserves the right to purchase materials directly from existing Statewide Price Agreements and other sources, and to provide these materials to the Contractor. To that end, the Contractor shall provide an itemized, quantifiable list of materials required for the project.

If the Contractor is requesting reimbursement for materials used on the work, copies of the invoices for the materials may be included when submitting invoices/pay applications. The Contractor may NOT add markups for the materials purchased. Contractor shall submit billings, based on actual Contractor costs for materials, less any applicable percentage for discounts. Contractor shall provide verification that materials purchased were used for the project if requested. Any unused, billed for materials shall be turned over to the Using Agency for which the work was provided.

The Using Agency reserves the right to procure specialty services directly from its other Statewide Price Agreements and other sources to the awarded Contractor. Specialty services provided from other Statewide Price Agreements and other sources shall be coordinated by the Contractor.

The Using Agency reserves the right to obtain quotes from multiple vendors covered under this Statewide Price Agreement and award a project to a Contractor based on the quotes.

When a service is needed, the Using Agency shall provide, at a minimum, a detailed scope of work and/or drawings defining work required.

If any equipment or building system cannot be economically repaired or has reached the end of its life cycle, the Contractor shall justify with costs and other information the need for replacement. If replacement is recommended, the Contractor will provide written justification for system and/or the model, size and type of unit recommended along with any applicable efficiency data. The Using Agency's and energy standards will be discussed and taken into consideration when proposing replacement units or systems.

The State of New Mexico requires that all materials shall be new and of the highest quality and at the best attainable price available for the type of work being performed.

No used materials shall be used on the project. Recycled materials specifically prepared for reuse to meet "LEED" certification may be permitted, with the User Agency's approval.

DocuSign Envelope ID: 9C0D0BCE-1F94-4323-9C4D-6BA4D233D2D9

The Contractor shall visit the site and compare the Using Agency's scope of work and/or drawings to the existing conditions and provide all services called for in addition to the requirements set forth in this Price Agreement.

The Contractor will be required to provide a written quote, to include the work to be performed and the amount of time required for the completion of the project and submit to the Using Agency at no cost to the Using Agency. The quote shall separate the cost of itemized materials (with any applicable discounts), labor, per diem and mileage, bonds, permits, insurance, subcontractor quote(s), itemized equipment costs, any design fees needed for stamped drawings, gross receipts tax, itemized direct site overhead costs such as portable toilets, dumpsters, temporary fencing, scaffolding, signage, traffic management, work area barriers and protective equipment, materials testing, job trailers, storage pods, etc. Job workers/project manager/superintendent's cost for vehicles or phones or gas is **not** permitted.

The Contractor's quote for mileage and per diem must be priced as follows:
"Per Diem Rate" means lodging, meals, and incidentals (excluding taxes). Reference the GSA rates in Section Lodging by month and Section Meals & Incidentals Breakdown link: https://www.gsa.gov/travel/plan-book/per-diem-rates
"Mileage Rate" for any mileage quoted for contracted work as defined below: "Mileage Rate" means "Only the mileage from the dispatch to the job site for each mile traveled by vehicle as referenced in IRS standard mileage rates using link https://www.irs.gov/taxprofessionals/standard-mileage-rates in excess of 50 miles one way". The mileage shall be calculated with https://tripmaker.randmcnally.com

Prior to commencement of any work performed the Using Agency will issue a notice to proceed for the work upon receipt of a purchase order, based on the prices set forth by Contractor's quote. The work on any project to be performed under this Contract shall commence no later than ten (10) consecutive calendar days after the date of written "Notice to Proceed." On smaller projects, an email will suffice.

The Contractor shall begin the work based on the priority identified by the Using Agency. Any delay beyond the stated completion date shall be upon agreement by the Using Agency and the Contractor.

Where work is to be conducted in a state or local correctional or secured facility, security clearances and background checks that may be required by the facility for the Contractor and its employees must be obtained prior to commencement of any work at that facility. The Using Agency reserves the right to deny any employee of the Contractor, access to the facility should the employee be in violation of any criteria required for the security clearance.

The User Agency reserves the right to provide an escort and/or full time supervision of the Contractor and its employees during any or all phases of a project, should the Using Agency feel it is in its best interest to provide these extraordinary security services.

The Using Agency reserves the right to escort any or all employees of the Contractor off its property, for any inappropriate conduct or actions that jeopardize the safety, security or wellbeing of the facility or any individual. Inappropriate behavior by the Contractor, its employees or subcontractors may be grounds for immediate removal from this Price Agreement. Any employee of the Contractor found in violation of any law, while on the User Agency's property, may be prosecuted.

Change Orders:
Any change orders to the project scope will require an additional RFQ requesting the backup materials and labor costs and shall be substantiated without a doubt there was no way of knowing the additional services were needed when the original quote was provided. The pricing shall conform to the SPA. Change orders shall be managed closely by the Using Agency. Change order abuse shall be reported to the Procurement Specialist listed on the cover page of this Price Agreement. Preventative measure shall be taken by both the contractor and the Using Agency prior to issuing the Notice to Proceed. Such measures may include: soil tests (soil boring); clarification of ambiguity in the project plan, the scope of work, the RFQ, the drawings, etc.; the project scope should be completely defined and agreed upon before any work begins.

DocuSign Envelope ID: 9C0D0BCE-1F94-4323-9C4D-6BA4D233D2D9

Using Agency's obligations:

- Shall provide, at a minimum, a detailed scope of work and/or drawings defining work required.
- Allow the Contractor limited use of on-site utilities for projects at an existing building.
- Shall provide periodic and/or random inspections of its projects. Using Agencies shall be responsible for providing its inspections, photography of the project's progress, and preparation of field observation reports.
- Conduct weekly on-site meetings with the Contractor, or on an as-needed basis, to ensure compliance with the scope of work for the project; provide assistance and guidance; to resolve problems arising during the project; and to ensure quality of work and materials being incorporated into the project.
- Process requests for payment within twenty-one (21) days of time/date stamped receipt of proper invoice and/or G702 & G703 Schedule of Values, Application and Certificate for Payment, when more than a single invoice applies to the contracted amount.
- If applicable, procure independent special inspections, commissioning, structural, soils testing with geotechnical reports and/or topographical survey.

Other Construction Related Terms and Conditions:

Time Considerations:
The work on any project to be performed under this Agreement shall commence no later than ten (10) consecutive calendar days after the date of written "Notice to Proceed." On smaller projects, an email will suffice. The date of Substantial Completion shall be described in the RFQ or related construction contract. The date can be extended by the Using Agency by valid written Change Order.

Should the Contractor neglect, refuse, or otherwise fail to complete the Work on the project within the time specified in the RFQ or related construction contract, the Contractor agrees, in partial consideration for the award of the Purchase Order, to pay to the Using Agency the amount of dollars named in the RFQ or construction contract per consecutive calendar day, not as a penalty, but as liquidated damages for such breach of the Purchase Order or related construction contract under this Price Agreement.

Mediation:
Any controversy or claim arising between the parties shall be settled by mediation if the parties cannot reach a mutually agreeable solution. The parties shall endeavor to resolve their disagreement by mediation which, unless the parties mutually agree otherwise, shall be in accordance with the procedures of the New Mexico Public Works Mediation Act (NMSA §13-4C-1 et seq.) except that before any party may select a mediator it must confer in good faith with the other party concerning the selection of a mutually acceptable mediator. Mediation shall proceed in advance of legal or equitable proceedings, which shall be stayed pending mediation for a period of **sixty (60) days** from the date of notice of mediation session, unless stayed for a longer period by agreement of the parties or court order.

Inspection of Work:
If a Purchase Order is issued for the purchase of services, the following terms shall apply when applicable:

A. Services include services performed, workmanship, and material furnished or utilized in the performance of services.
B. The Contractor shall provide and maintain an inspection system acceptable to the Using Agency covering the services under the Purchase Order. Complete records of all inspection work performed by the Contractor shall be maintained and made available to the Using Agency or other party to the Purchase Order during the term of performance of the Work and for as long thereafter as required.
C. The Using Agency has the right to inspect and test all services contemplated to the extent practicable at all times and places during the term of the Project. The Using Agency shall perform inspections and tests in a manner that will not unduly delay or interfere with Contractor's performance.
D. If the Using Agency performs inspections or tests on the premises of the Contractor or a subcontractor, the Contractor shall furnish, and shall require subcontractors to furnish, at no increase in Purchase Order price, all reasonable facilities and assistance for the safe and convenient performance of such inspections or tests.

DocuSign Envelope ID: 9C0D0BCE-1F94-4323-9C4D-6BA4D233D2D9

E. If any part of the services do not conform with the requirements, the Using Agency may require the Contractor to re-perform the services in conformity with the requirements at no increase in Purchase Order amount. When the defects in services cannot be corrected by re-performance, the Using Agency may:
   (1) Require the Contractor to take necessary action(s) to ensure that future performance conforms to the requirements;
   (2) Reduce the Purchase Order price to reflect the reduced value of the services performed.

F. If the Contractor fails to promptly re-perform the services or to take the necessary action(s) to ensure future performance in conformity with the requirements, the Using Agency may:
   (1) By Agreement or otherwise, perform the services and charge to the Contractor any cost incurred by the Using Agency that is directly related to the performance of such service; or
   (2) Cancel the Purchase Order for default.

THE PROVISIONS OF THIS ARTICLE ARE NOT EXCLUSIVE AND DO NOT WAIVE THE USING AGENCY'S OTHER LEGAL RIGHTS AND REMEDIES CAUSED BY THE CONTRACTOR'S DEFAULT/BREACH OF THE PURCHASE ORDER/PRICE AGREEMENT.

Suspension, Delay or Interruption of Work:
The Using Agency may, without cause, order the Contractor, in writing, to suspend, delay or interrupt the Work in whole or in part for such period of time as the Using Agency may determine.. Upon receipt of such notice, Contractor shall leave the jobsite and any equipment in a safe condition prior to departing. Contractor must assert rights to additional compensation within thirty (30) days after suspension of work is lifted and return to work is authorized.

Time Extension Costs:
Agreed Compensation for Overhead "General Conditions" for Changes to Time for Completion or Contract Completion Date for Changes to the Work**:** If the change in the Work also changes the Time for Completion or the Agreement Completion Date by adding days to complete the Work, an itemized accounting of the following General Conditions costs for direct Site overhead set forth in the subparagraph below may be considered as allowable costs for compensation. Home office overhead and other indirect overhead expenses are not added into the General Conditions expenses.

Direct Site Overhead Expenses:
The Contractor's per diem expenses, as shown by the itemized accounting, for the following allowable, applicable, direct Site overhead expenses: The Site superintendent's pro-rata salary, temporary Site office trailer, temporary fencing, building utility costs, security, temporary storage and temporary Site utilities including electricity, heat, water, and sanitary/toilet facilities, etc. for each day added.

If at any time there is a delay in the critical path of the Work due to postponement, due to the Contractor's efforts to justify an extension of the time or an increase in the Agreement Price beyond the deadlines or due to the Contractor's refusal to proceed with any of the approved Work, such delay and any Contractor costs resulting from it shall not serve as the basis for the extension of the Time for Completion or Agreement Completion Date or for an increase in the Contract Price.

Clean Up and Storage:

A. The Contractor will provide off-site legal disposal of all waste products, trash, and debris. Using Agency's trash receptacles will not be used by the Contractor. Sanitary facilities will "not" be available at the job site. Contractor shall be responsible for the provision and maintenance of portable toilets.
B. The Contractor on a daily basis shall keep the premises and surrounding area free from accumulation of waste materials or rubbish caused by operations under the Agreement. At completion of the Work, the Contractor shall remove from and about the Project waste materials, rubbish, the Contractor's tools, construction equipment, machinery and surplus materials and shall then thoroughly clean the premises and the site to the Using Agency's satisfaction.
C. Materials or equipment shall be delivered to the project in the manufacturer's original sealed, labeled containers and shall be adequately protected against moisture, dust, tampering or damage from improper handling or storage. Materials shall not be delivered to the site before they are needed.

DocuSign Envelope ID: 9C0D0BCE-1F94-4323-9C4D-6BA4D233D2D9

D. Storage of materials and construction equipment shall be coordinated with the Using Agency.

Permits and Fees:

A. IF APPLICABLE- The Contractor shall secure and pay for the Building Permit and other permits and governmental fees, licenses and inspections and Certificate of Occupancy necessary for proper execution and completion of the Work. Changes or modifications to the Work shall include all requirements of this paragraph.

B. The Contractor shall comply with and give notices required by laws, ordinances, rules, regulations and lawful orders of public authorities applicable to performance of the Work.

C. IF APPLICABLE- Certificates of Inspection, use and occupancy will be delivered to the Using Agency upon completion of the Work in sufficient time for occupation of the facility in accordance with the approved schedule for the Work. Contractor shall deliver a photocopy of the Building Permit to the Design Professional and Using Agency as soon as it is obtained.

Schedule, Progress Meetings and Reports:

A. The Contractor, promptly after being awarded a Project and before the first payment application, shall prepare and submit for the Using Agency's information a Critical Path Construction Schedule for the Work that indicates the intended start and completion of the various construction activities, which shall be implemented and adhered to by the Contractor, Subcontractors, material suppliers and equipment suppliers. At a minimum, the schedule shall be a GANTT type schedule and shall not exceed time limits allowed by the RFQ or Notice to Proceed with no fewer work breakdown events than line items of the Schedule of Values.

B. The Contractor shall perform the Work in general accordance with the most recent schedule submitted to the Using Agency.

C. Progress meetings shall be scheduled on a regular basis. The purpose will be to review the upcoming activities, any open issues and current progress. The Contractor shall keep any meeting minutes as needed. Progress schedules shall be updated regularly. A three week look-ahead schedule should be presented at every project meeting. An updated critical path schedule shall be presented with any change orders and with every pay application.

D. The Contractor shall prepare a Daily Report each day that Contractor, Subcontractors or any other entity are on the Project. The Daily Reports shall be maintained at the site and be well organized. The Using Agency may request copies at any time. The reports may include:
   1. Report date and who prepared the report;
   2. Weather conditions - low temp, high temp, visibility, humidity, wind, wind direction, cloud conditions, precipitation amount, other notes;
   3. Companies present by name and their number of workers, work location, total man hours that day for each company;
   4. Equipment - type, source, units of work done, location of work, hour meter reading;
   5. Material brought to site - description, units, quantity, quality, location, time;
   6. Visitors to site - name, company, time;
   7. Safety concerns - company, contact, noticed by, work activity, safety issue, requirement, outcome;
   8. Quality assurance and control - company, description of issue, specification section, issued by.

Close-out Requirements:

The Contractor shall submit to the Using Agency a separate and detailed Closeout Schedule indicating the date of Final Completion and all work to be completed before Final Completion including Close-Out requirements. The punch list of incomplete or inadequate work shall also be submitted when the work is substantially complete. Failure to include any item on the punch list does not alter the responsibility of the Contractor to complete all work in accordance with the Contract Documents.

DocuSign Envelope ID: 9C0D0BCE-1F94-4323-9C4D-6BA4D233D2D9

Before final completion can be achieved, all Work must be complete and accepted including the following as applicable:

a. Work associated with Punch List(s);
b. Testing, balance or performance operations complete and in agreement that associated work is in compliance with the Contract Documents;
c. One hard copy and one electronic copy in .pdf format of final approved test, balance or performance report(s) complete with directory of contents submitted to Using Agency;
d. As-Built drawings delivered in autocad or electronic format;
e. Written certification signed by Using Agency of delivery and stocking of extra material, equipment or components required by the Purchase Order at a location established by the Using Agency;
f. Delivery of all warranties required by the Work;
g. All keys, passes, codes, software or other methods or components of control or security which have been correctly and adequately accounted for and closed-out;
h. Completed Operations Liability insurance policy certificate, if applicable;
i. Training of staff on all applicable building systems;
j. All Storm Water Pollution Prevention Permits (SWPPP) have been updated or closed;
k. Utility transfer to User/Using Agency;
l. Operations and Maintenance Manuals;
m. Certified statement of Release of Liens (AIA Document G706A or approved form) and Consent of Surety.

Warranty:
The Contractor shall warrant its work (non-roofing and equipment), for materials and for workmanship furnished and performed under this Price Agreement for a period of one (1) year minimum from the date of acceptance or Substantial Completion whichever is longest. The Contractor shall warrant its work for repairs or restoration of existing systems, appliances and work for ninety (90) days from the date of acceptance or Substantial Completion. It is understood that some equipment is far beyond its normal life and a warranty cannot be extended/supplied. Contractor must pass on to the User Agency warranties of replaced roofs and equipment offered by the manufacturer.

Payment Provisions:
Generally payments are made on a thirty (30) day billing cycle. Payment for projects of less than thirty (30) day duration shall be paid upon the Using Agency's acceptance of the work.

All payments under this Agreement are subject to the following provisions:

A. Acceptance - In accordance with Section 13-1-158 NMSA 1978, the Agency shall determine if the Construction Work provided meets specifications. No payment shall be made for any work until the Work has been accepted in writing by the Using Agency. Unless otherwise agreed upon between the Using Agency and the Contractor, within fifteen (15) days from the date the Using Agency receives written notice from the Contractor that payment is requested for work, the Using Agency shall issue a written certification of complete or partial acceptance or rejection of the Work. Unless the Using Agency gives notice of rejection within the specified time period, the Work will be deemed to have been accepted.

B. Payment of Invoice - Upon acceptance that the Work has been received and accepted, payment shall be tendered to the Contractor within twenty one (21) days after the date of acceptance of an undisputed invoice.

C. The Contractor, before final payment of the amount due under this Contract, shall provide requested Close-out documents including any release of liens.

DocuSign Envelope ID: 9C0D0BCE-1F94-4323-9C4D-6BA4D233D2D9

BID INFORMATION:
"Tax" The bid prices for this ITB shall **not** include New Mexico gross receipts tax or local option tax(es).

"Hourly Rate" means the proposed fully loaded maximum hourly rates that include fringe benefits and any overhead costs for contractor personnel, as well as subcontractor personnel, if appropriate. The Hourly Rate does not include mileage, per diem or lodging.

"Offeror" shall reference all work positions associated with this project, and each position's firm, fixed hourly rate. This hourly rate does not include billable reimbursable rates for mileage, meals or lodging. The State of New Mexico, at its discretion, may negotiate lower rates on a project by project basis, with the awarded Contractor.

Hourly rates are requested for the three (3) levels of personnel. ***All items for pricing must be filled in.*** If one of the personnel listed is not relevant to your company, fill in a rate for a comparable employee that is on staff or could be on staff at a future time. For example, if the Superintendent also functions as the Journeyman or Experienced worker or vice versa, enter his rate for both items. Any blank items will cause a possible rejection of the bid for non-compliance.

Labor Rates:
1. Superintendent: a person with supervisory experience who maintains control of the work and work site. This person may or may not actually perform work on the project.

2. Journeyman or Experienced Worker: a person licensed by the State of New Mexico as a journeyman in the specialized field of work required and being performed or a person with many years of experience with a high rate of pay.

3. Laborer: a person with minimal experience, performing minor forms of labor.

Hours Worked:

Regular Hours: Monday through Friday and 8 am through 5 pm.

After Hours: All hours not within the days and times listed for "Regular Hours".

Holidays: Holidays will be considered "After Hours" and paid at "After Hours" rates.

The State of New Mexico reserves the right to award this Price Agreement to multiple vendors. Bidders must include pricing for ALL items in order to allow for accurate comparisons. If a Bidder fails to include one or more of those items, his Bid may be rejected.

Bids for these services are requested on a statewide basis. The intent in the bid evaluation is to add up all of the items from Items 1 through 16 in order to determine the low bidders.

*****End of Specifications*****

DocuSign Envelope ID: 9C0D0BCE-1F94-4323-9C4D-6BA4D233D2D9

Items:

Item	Approx. Qty.	UOM	Article and Description	Unit Price	Awarded Vendor
1	**1**	**Hourly**	**Labor Rate - Projects under Sixty Thousand ($60,000) Superintendent, regular hours**		
				$75.00	(AA)
				$75.00	(AB)
				$85.00	(AC)
				$95.00	(AD)
				$73.70	(AE)
				$105.00	(AF)
				$65.00	(AG)
				$82.30	(AH)
				$85.00	(AI)
				$95.00	(AJ)
				$76.00	(AK)
				$68.00	(AL)
				$72.50	(AM)
				$180.00	(AN)
				$108.11	(AO)
				$175.00	(AP)
				$51.72	(AQ)
				$100.00	(AR)
				$150.00	(AS)
				$150.00	(AT)
				$36.25	(AU)
				$100.00	(AV)
				$80.00	(AW)
				$195.00	(AX)
				$155.00	(AY)
				$100.00	(AZ)
				$85.00	(BA)
				$87.85	(BB)
				$75.00	(BC)
				$150.00	(BD)
				$80.40	(BE)
				$92.00	(BF)
				$72.50	(BG)
				$85.00	(BH)
				$65.00	(BI)
				$65.00	(BJ)
				$75.00	(BK)
				$70.33	(BL)
				$103.07	(BM)
				$80.00	(BN)
				$165.00	(BO)

DocuSign Envelope ID: 9C0D0BCE-1F94-4323-9C4D-6BA4D233D2D9

Item	Approx. Qty.	UOM	Article and Description	Unit Price	Awarded Vendor
			Item 1 - Continued		
				$99.78	(BP)
				$98.00	(BQ)
				$90.00	(BR)
				$70.00	(BS)
				$100.00	(BT)
				$93.00	(BU)
				$80.00	(BV)
				$85.00	(BW)
				$132.47	(BX)
				$90.00	(BY)
2	**1**	**Hourly**	**Labor Rate - Projects under Sixty Thousand ($60,000) Superintendent, after hours**		
				$112.50	(AA)
				$85.00	(AB)
				$85.00	(AC)
				$110.00	(AD)
				$73.70	(AE)
				$120.00	(AF)
				$75.00	(AG)
				$118.37	(AH)
				$85.00	(AI)
				$142.50	(AJ)
				$76.00	(AK)
				$102.00	(AL)
				$88.00	(AM)
				$200.00	(AN)
				$162.17	(AO)
				$250.00	(AP)
				$77.58	(AQ)
				$150.00	(AR)
				$225.00	(AS)
				$205.00	(AT)
				$61.62	(AU)
				$150.00	(AV)
				$100.00	(AW)
				$195.00	(AX)
				$185.00	(AY)
				$125.00	(AZ)
				$115.00	(BA)
				$131.77	(BB)
				$95.00	(BC)
				$225.00	(BD)
				$120.61	(BE)
				$145.00	(BF)

DocuSign Envelope ID: 9C0D0BCE-1F94-4323-9C4D-6BA4D233D2D9

Item	Approx. Qty.	UOM	Article and Description	Unit Price	Awarded Vendor
			Item 2 - Continued		
				$83.37	(BG)
				$95.00	(BH)
				$85.00	(BI)
				$75.00	(BJ)
				$85.00	(BK)
				$77.86	(BL)
				$173.14	(BM)
				$100.00	(BN)
				$225.00	(BO)
				$149.67	(BP)
				$126.00	(BQ)
				$90.00	(BR)
				$95.00	(BS)
				$120.00	(BT)
				$103.00	(BU)
				$120.00	(BV)
				$127.50	(BW)
				$165.42	(BX)
				$155.00	(BY)
3	**1**	**Hourly**	**Labor Rate - Projects under Sixty Thousand ($60,000) Journeyman or Experienced worker, regular hours**		
				$60.00	(AA)
				$70.00	(AB)
				$85.00	(AC)
				$105.00	(AD)
				$60.50	(AE)
				$90.00	(AF)
				$49.00	(AG)
				$78.41	(AH)
				$70.00	(AI)
				$95.00	(AJ)
				$54.00	(AK)
				$64.00	(AL)
				$58.50	(AM)
				$140.00	(AN)
				$108.11	(AO)
				$150.00	(AP)
				$48.53	(AQ)
				$125.00	(AR)
				$150.00	(AS)
				$125.00	(AT)
				$73.84	(AU)
				$75.00	(AV)

DocuSign Envelope ID: 9C0D0BCE-1F94-4323-9C4D-6BA4D233D2D9

Item	Approx. Qty.	UOM	Article and Description	Unit Price	Awarded Vendor
			Item 3 - Continued		
				$65.00	(AW)
				$165.00	(AX)
				$135.00	(AY)
				$85.00	(AZ)
				$67.00	(BA)
				$69.66	(BB)
				$70.00	(BC)
				$150.00	(BD)
				$112.83	(BE)
				$120.00	(BF)
				$67.50	(BG)
				$80.00	(BH)
				$100.00	(BI)
				$49.00	(BJ)
				$55.00	(BK)
				$62.54	(BL)
				$134.44	(BM)
				$70.00	(BN)
				$145.00	(BO)
				$85.88	(BP)
				$88.00	(BQ)
				$75.00	(BR)
				$70.00	(BS)
				$60.00	(BT)
				$70.00	(BU)
				$75.00	(BV)
				$80.00	(BW)
				$125.27	(BX)
				$120.00	(BY)
4	**1**	**Hourly**	**Labor Rate - Projects under Sixty Thousand ($60,000) Journeyman or Experienced worker, after hours**		
				$90.00	(AA)
				$75.00	(AB)
				$85.00	(AC)
				$125.00	(AD)
				$70.40	(AE)
				$110.00	(AF)
				$56.00	(AG)
				$111.07	(AH)
				$105.00	(AI)
				$142.50	(AJ)
				$65.00	(AK)
				$96.00	(AL)

DocuSign Envelope ID: 9C0D0BCE-1F94-4323-9C4D-6BA4D233D2D9

Item	Approx. Qty.	UOM	Article and Description	Unit Price	Awarded Vendor
			Item 4 - Continued		
				$74.00	(AM)
				$155.00	(AN)
				$162.17	(AO)
				$200.00	(AP)
				$72.80	(AQ)
				$135.00	(AR)
				$225.00	(AS)
				$150.00	(AT)
				$95.36	(AU)
				$112.50	(AV)
				$90.00	(AW)
				$165.00	(AX)
				$155.00	(AY)
				$110.00	(AZ)
				$85.00	(BA)
				$104.49	(BB)
				$90.00	(BC)
				$225.00	(BD)
				$169.24	(BE)
				$155.00	(BF)
				$77.63	(BG)
				$95.00	(BH)
				$110.00	(BI)
				$56.00	(BJ)
				$85.00	(BK)
				$72.55	(BL)
				$176.48	(BM)
				$90.00	(BN)
				$205.00	(BO)
				$128.82	(BP)
				$106.00	(BQ)
				$112.50	(BR)
				$95.00	(BS)
				$85.00	(BT)
				$90.00	(BU)
				$113.00	(BV)
				$120.00	(BW)
				$158.22	(BX)
				$150.00	(BY)
5	**1**	**Hourly**	**Labor Rate - Projects under Sixty Thousand ($60,000) Laborer, regular hours**		
				$35.00	(AA)
				$65.00	(AB)
				$85.00	(AC)

DocuSign Envelope ID: 9C0D0BCE-1F94-4323-9C4D-6BA4D233D2D9

Item	Approx. Qty.	UOM	Article and Description	Unit Price	Awarded Vendor
			Item 5 - Continued		
				$55.00	(AD)
				$49.50	(AE)
				$75.00	(AF)
				$28.00	(AG)
				$50.21	(AH)
				$45.00	(AI)
				$55.00	(AJ)
				$44.00	(AK)
				$62.00	(AL)
				$40.00	(AM)
				$100.00	(AN)
				$83.23	(AO)
				$100.00	(AP)
				$33.81	(AQ)
				$80.00	(AR)
				$75.00	(AS)
				$100.00	(AT)
				$21.50	(AU)
				$50.00	(AV)
				$55.00	(AW)
				$135.00	(AX)
				$120.00	(AY)
				$55.00	(AZ)
				$60.00	(BA)
				$41.43	(BB)
				$55.00	(BC)
				$75.00	(BD)
				$59.74	(BE)
				$26.50	(BF)
				$41.50	(BG)
				$65.00	(BH)
				$45.00	(BI)
				$28.00	(BJ)
				$35.00	(BK)
				$54.80	(BL)
				$30.03	(BM)
				$60.00	(BN)
				$105.00	(BO)
				$44.42	(BP)
				$74.00	(BQ)
				$45.00	(BR)
				$60.00	(BS)
				$45.00	(BT)

DocuSign Envelope ID: 9C0D0BCE-1F94-4323-9C4D-6BA4D233D2D9

Item	Approx. Qty.	UOM	Article and Description	Unit Price	Awarded Vendor
			Item 5 - Continued		
				$50.00	(BU)
				$55.00	(BV)
				$40.00	(BW)
				$87.58	(BX)
				$25.00	(BY)
6	**1**	**Hourly**	**Labor Rate - Projects under Sixty Thousand ($60,000) Laborer, after hours**		
				$52.50	(AA)
				$70.00	(AB)
				$85.00	(AC)
				$65.00	(AD)
				$58.30	(AE)
				$95.00	(AF)
				$35.00	(AG)
				$70.22	(AH)
				$67.50	(AI)
				$82.50	(AJ)
				$54.00	(AK)
				$93.00	(AL)
				$54.00	(AM)
				$110.00	(AN)
				$124.85	(AO)
				$150.00	(AP)
				$50.72	(AQ)
				$110.00	(AR)
				$112.50	(AS)
				$125.00	(AT)
				$36.12	(AU)
				$75.00	(AV)
				$75.00	(AW)
				$135.00	(AX)
				$145.00	(AY)
				$75.00	(AZ)
				$72.00	(BA)
				$62.89	(BB)
				$75.00	(BC)
				$82.50	(BD)
				$89.60	(BE)
				$52.00	(BF)
				$51.73	(BG)
				$80.00	(BH)
				$45.00	(BI)
				$35.00	(BJ)
				$50.00	(BK)

DocuSign Envelope ID: 9C0D0BCE-1F94-4323-9C4D-6BA4D233D2D9

Item	Approx. Qty.	UOM	Article and Description	Unit Price	Awarded Vendor
			Item 6 - Continued		
				$74.30	(BL)
				$60.06	(BM)
				$80.00	(BN)
				$125.00	(BO)
				$66.63	(BP)
				$89.00	(BQ)
				$67.50	(BR)
				$85.00	(BS)
				$60.00	(BT)
				$65.00	(BU)
				$83.00	(BV)
				$60.00	(BW)
				$114.89	(BX)
				$50.00	(BY)
7	**1**	**Hourly**	**Labor Rate - Projects over Sixty Thousand ($60,000) Wage Decision Projects, Superintendent, regular hours**		
				$75.00	(AA)
				$80.00	(AB)
				$85.00	(AC)
				$110.00	(AD)
				$73.70	(AE)
				$105.00	(AF)
				$65.00	(AG)
				$82.30	(AH)
				$85.00	(AI)
				$95.00	(AJ)
				$76.00	(AK)
				$68.00	(AL)
				$75.00	(AM)
				$180.00	(AN)
				$108.11	(AO)
				$200.00	(AP)
				$51.72	(AQ)
				$135.00	(AR)
				$150.00	(AS)
				$150.00	(AT)
				$36.25	(AU)
				$115.00	(AV)
				$80.00	(AW)
				$130.00	(AX)
				$155.00	(AY)
				$105.00	(AZ)
				$100.00	(BA)

DocuSign Envelope ID: 9C0D0BCE-1F94-4323-9C4D-6BA4D233D2D9

Item	Approx. Qty.	UOM	Article and Description	Unit Price	Awarded Vendor
			Item 7 - Continued		
				$87.85	(BB)
				$75.00	(BC)
				$150.00	(BD)
				$80.40	(BE)
				$99.00	(BF)
				$83.37	(BG)
				$85.00	(BH)
				$75.00	(BI)
				$65.00	(BJ)
				$75.00	(BK)
				$92.36	(BL)
				$114.07	(BM)
				$90.00	(BN)
				$165.00	(BO)
				$99.78	(BP)
				$126.00	(BQ)
				$90.00	(BR)
				$70.00	(BS)
				$100.00	(BT)
				$93.00	(BU)
				$98.00	(BV)
				$105.00	(BW)
				$162.10	(BX)
				$101.00	(BY)
8	**1**	**Hourly**	**Labor Rate - Projects over Sixty Thousand ($60,000) Wage Decision Projects, Superintendent, after hours**		
				$112.50	(AA)
				$90.00	(AB)
				$85.00	(AC)
				$120.00	(AD)
				$73.70	(AE)
				$120.00	(AF)
				$75.00	(AG)
				$118.37	(AH)
				$85.00	(AI)
				$142.50	(AJ)
				$76.00	(AK)
				$102.00	(AL)
				$88.00	(AM)
				$200.00	(AN)
				$162.17	(AO)
				$275.00	(AP)
				$77.58	(AQ)

DocuSign Envelope ID: 9C0D0BCE-1F94-4323-9C4D-6BA4D233D2D9

Item	Approx. Qty.	UOM	Article and Description	Unit Price	Awarded Vendor
			Item 8 - Continued		
				$150.00	(AR)
				$225.00	(AS)
				$205.00	(AT)
				$61.60	(AU)
				$172.50	(AV)
				$100.00	(AW)
				$130.00	(AX)
				$185.00	(AY)
				$130.00	(AZ)
				$130.00	(BA)
				$128.71	(BB)
				$95.00	(BC)
				$225.00	(BD)
				$120.61	(BE)
				$140.00	(BF)
				$95.88	(BG)
				$100.00	(BH)
				$95.00	(BI)
				$75.00	(BJ)
				$95.00	(BK)
				$138.54	(BL)
				$176.44	(BM)
				$110.00	(BN)
				$225.00	(BO)
				$149.67	(BP)
				$153.00	(BQ)
				$90.00	(BR)
				$95.00	(BS)
				$120.00	(BT)
				$103.00	(BU)
				$147.00	(BV)
				$150.00	(BW)
				$206.87	(BX)
				$155.00	(BY)
9	**1**	**Hourly**	**Labor Rate - Projects over Sixty Thousand ($60,000) Wage Decision Projects, Journeyman, regular hours**		
				$60.00	(AA)
				$75.00	(AB)
				$85.00	(AC)
				$120.00	(AD)
				$70.50	(AE)
				$90.00	(AF)
				$49.00	(AG)

DocuSign Envelope ID: 9C0D0BCE-1F94-4323-9C4D-6BA4D233D2D9

Item	Approx. Qty.	UOM	Article and Description	Unit Price	Awarded Vendor
			Item 9 - Continued		
				$78.41	(AH)
				$70.00	(AI)
				$95.00	(AJ)
				$88.00	(AK)
				$64.00	(AL)
				$68.00	(AM)
				$140.00	(AN)
				$108.11	(AO)
				$175.00	(AP)
				$48.53	(AQ)
				$125.00	(AR)
				$150.00	(AS)
				$125.00	(AT)
				$78.36	(AU)
				$90.00	(AV)
				$75.00	(AW)
				$110.00	(AX)
				$135.00	(AY)
				$90.00	(AZ)
				$82.00	(BA)
				$68.04	(BB)
				$70.00	(BC)
				$150.00	(BD)
				$157.77	(BE)
				$152.00	(BF)
				$77.63	(BG)
				$85.00	(BH)
				$125.00	(BI)
				$49.00	(BJ)
				$55.00	(BK)
				$75.42	(BL)
				$169.74	(BM)
				$80.00	(BN)
				$145.00	(BO)
				$85.88	(BP)
				$106.00	(BQ)
				$75.00	(BR)
				$70.00	(BS)
				$60.00	(BT)
				$70.00	(BU)
				$90.00	(BV)
				$90.00	(BW)
				$153.70	(BX)

DocuSign Envelope ID: 9C0D0BCE-1F94-4323-9C4D-6BA4D233D2D9

Item	Approx. Qty.	UOM	Article and Description	Unit Price	Awarded Vendor
			Item 9 - Continued		
				$150.00	(BY)
10	**1**	**Hourly**	**Labor Rate - Projects over Sixty Thousand ($60,000) Wage Decision Projects, Journeyman, after hours**		
				$90.00	(AA)
				$80.00	(AB)
				$85.00	(AC)
				$130.00	(AD)
				$78.50	(AE)
				$110.00	(AF)
				$56.00	(AG)
				$111.07	(AH)
				$105.00	(AI)
				$142.50	(AJ)
				$88.00	(AK)
				$96.00	(AL)
				$82.00	(AM)
				$155.00	(AN)
				$162.17	(AO)
				$250.00	(AP)
				$72.80	(AQ)
				$135.00	(AR)
				$225.00	(AS)
				$150.00	(AT)
				$95.60	(AU)
				$135.00	(AV)
				$95.00	(AW)
				$110.00	(AX)
				$155.00	(AY)
				$120.00	(AZ)
				$98.00	(BA)
				$102.06	(BB)
				$90.00	(BC)
				$225.00	(BD)
				$236.66	(BE)
				$202.00	(BF)
				$89.27	(BG)
				$100.00	(BH)
				$125.00	(BI)
				$56.00	(BJ)
				$85.00	(BK)
				$116.35	(BL)
				$246.20	(BM)
				$100.00	(BN)

DocuSign Envelope ID: 9C0D0BCE-1F94-4323-9C4D-6BA4D233D2D9

Item	Approx. Qty.	UOM	Article and Description	Unit Price	Awarded Vendor
			Item 10 - Continued		
				$205.00	(BO)
				$128.82	(BP)
				$127.00	(BQ)
				$112.50	(BR)
				$95.00	(BS)
				$85.00	(BT)
				$90.00	(BU)
				$135.00	(BV)
				$130.00	(BW)
				$199.66	(BX)
				$220.00	(BY)
11	**1**	**Hourly**	**Labor Rate - Projects over Sixty Thousand ($60,000) Wage Decision Projects, Laborer, regular hours**		
				$35.00	(AA)
				$70.00	(AB)
				$85.00	(AC)
				$65.00	(AD)
				$57.00	(AE)
				$75.00	(AF)
				$28.00	(AG)
				$50.21	(AH)
				$45.00	(AI)
				$55.00	(AJ)
				$60.00	(AK)
				$62.00	(AL)
				$47.00	(AM)
				$100.00	(AN)
				$83.23	(AO)
				$125.00	(AP)
				$33.81	(AQ)
				$85.00	(AR)
				$75.00	(AS)
				$100.00	(AT)
				$37.37	(AU)
				$65.00	(AV)
				$55.00	(AW)
				$90.00	(AX)
				$120.00	(AY)
				$60.00	(AZ)
				$72.00	(BA)
				$40.95	(BB)
				$55.00	(BC)
				$75.00	(BD)

DocuSign Envelope ID: 9C0D0BCE-1F94-4323-9C4D-6BA4D233D2D9

Item	Approx. Qty.	UOM	Article and Description	Unit Price	Awarded Vendor
			Item 11 - Continued		
				$74.14	(BE)
				$50.50	(BF)
				$51.73	(BG)
				$75.00	(BH)
				$50.00	(BI)
				$28.00	(BJ)
				$35.00	(BK)
				$57.78	(BL)
				$57.94	(BM)
				$70.00	(BN)
				$105.00	(BO)
				$44.42	(BP)
				$89.00	(BQ)
				$45.00	(BR)
				$60.00	(BS)
				$45.00	(BT)
				$50.00	(BU)
				$65.00	(BV)
				$50.00	(BW)
				$114.54	(BX)
				$50.00	(BY)
12	**1**	**Hourly**	**Labor Rate - Projects over Sixty Thousand ($60,000) Wage Decision Projects, Laborer, after hours**		
				$52.50	(AA)
				$75.00	(AB)
				$85.00	(AC)
				$75.00	(AD)
				$60.00	(AE)
				$95.00	(AF)
				$35.00	(AG)
				$70.22	(AH)
				$67.50	(AI)
				$82.50	(AJ)
				$71.00	(AK)
				$93.00	(AL)
				$59.00	(AM)
				$110.00	(AN)
				$124.85	(AO)
				$175.00	(AP)
				$50.72	(AQ)
				$110.00	(AR)
				$112.50	(AS)
				$125.00	(AT)

DocuSign Envelope ID: 9C0D0BCE-1F94-4323-9C4D-6BA4D233D2D9

Item	Approx. Qty.	UOM	Article and Description	Unit Price	Awarded Vendor
			Item 12 - Continued		
				$56.06	(AU)
				$97.50	(AV)
				$68.00	(AW)
				$90.00	(AX)
				$145.00	(AY)
				$80.00	(AZ)
				$85.00	(BA)
				$61.43	(BB)
				$75.00	(BC)
				$82.50	(BD)
				$112.12	(BE)
				$104.50	(BF)
				$59.49	(BG)
				$90.00	(BH)
				$65.00	(BI)
				$35.00	(BJ)
				$50.00	(BK)
				$86.75	(BL)
				$115.87	(BM)
				$90.00	(BN)
				$125.00	(BO)
				$66.63	(BP)
				$112.00	(BQ)
				$67.50	(BR)
				$85.00	(BS)
				$60.00	(BT)
				$65.00	(BU)
				$98.00	(BV)
				$70.00	(BW)
				$150.31	(BX)
				$100.00	(BY)
13	**1**	**Hourly**	**Labor Rate - Diagnosis, project estimates, troubleshooting, or other not listed**		
				$100.00	(AA)
				$65.00	(AB)
				$250.00	(AC)
				$125.00	(AD)
				$90.00	(AE)
				$90.00	(AF)
				$125.00	(AG)
				$86.21	(AH)
				$90.00	(AI)
				$145.00	(AJ)
				$140.00	(AK)

DocuSign Envelope ID: 9C0D0BCE-1F94-4323-9C4D-6BA4D233D2D9

Item	Approx. Qty.	UOM	Article and Description	Unit Price	Awarded Vendor
			Item 13 - Continued		
				$125.00	(AL)
				$85.00	(AM)
				$100.00	(AN)
				$115.62	(AO)
				$200.00	(AP)
				$51.72	(AQ)
				$100.00	(AR)
				$250.00	(AT)
				$85.00	(AU)
				$100.00	(AV)
				$100.00	(AW)
				$150.00	(AX)
				$225.00	(AY)
				$150.00	(AZ)
				$200.00	(BA)
				$87.85	(BB)
				$75.00	(BC)
				$75.00	(BD)
				$80.40	(BE)
				$100.00	(BF)
				$85.00	(BG)
				$85.00	(BH)
				$85.00	(BI)
				$125.00	(BJ)
				$95.00	(BK)
				$98.86	(BL)
				$93.50	(BM)
				$75.00	(BN)
				$485.00	(BO)
				$120.00	(BP)
				$145.00	(BQ)
				$90.00	(BR)
				$70.00	(BS)
				$110.00	(BT)
				$100.00	(BU)
				$175.00	(BV)
				$100.00	(BW)
				$150.00	(BX)
				$115.00	(BY)
14	**1**	**% Discount**	**Discount off all parts and materials. Invoice will include copies of all purchases for parts and materials, including vendor and date purchased. Enter zero if no discount is offered.**		
				0%	(AA)

DocuSign Envelope ID: 9C0D0BCE-1F94-4323-9C4D-6BA4D233D2D9

Item	Approx. Qty.	UOM	Article and Description	Unit Price	Awarded Vendor
			Item 14 - Continued		
				0%	(AB)
				0%	(AC)
				0%	(AD)
				0%	(AE)
				0%	(AF)
				0%	(AG)
				0%	(AH)
				0%	(AI)
				2%	(AJ)
				0%	(AK)
				0%	(AL)
				0%	(AM)
				0%	(AN)
				0%	(AO)
				0%	(AP)
				0%	(AQ)
				0%	(AR)
				0%	(AS)
				0%	(AT)
				2%	(AU)
				0%	(AV)
				0%	(AW)
				0%	(AX)
				0%	(AY)
				0%	(AZ)
				0%	(BA)
				0%	(BB)
				0%	(BC)
				0%	(BE)
				0%	(BF)
				0%	(BG)
				0%	(BH)
				0%	(BI)
				0%	(BJ)
				5%	(BK)
				0%	(BL)
				0%	(BM)
				0%	(BN)
				0%	(BO)
				0%	(BP)
				0%	(BQ)
				0%	(BR)
				15%	(BS)

DocuSign Envelope ID: 9C0D0BCE-1F94-4323-9C4D-6BA4D233D2D9

Item	Approx. Qty.	UOM	Article and Description	Unit Price	Awarded Vendor
			Item 14 - Continued		
				0%	(BT)
				0%	(BU)
				2%	(BV)
				0%	(BW)
				0%	(BX)
				0%	(BY)
15	**1**	**Day**	**Daily per diem rate for overnight stay as needed. Including dinner and breakfast per person. Bidders should provide a Per Diem Rate that does not exceed the Per Diem Rate defined above in this bid. If a Per Diem Rate is not submitted by the Bidder, the defined rate shall be the default.**		
				$150.00	(AA)
				$125.00	(AB)
				$50.00	(AC)
				$150.00	(AD)
				$180.00	(AE)
				$175.00	(AF)
				$100.00	(AG)
				$175.00	(AH)
				$125.00	(AI)
				$195.00	(AJ)
				$150.00	(AK)
				$131.00	(AL)
				$130.00	(AM)
				$210.00	(AN)
				$195.00	(AO)
				$250.00	(AP)
				$55.00	(AQ)
				$157.00	(AR)
				$150.00	(AS)
				$185.00	(AT)
				$163.00	(AU)
				$276.00	(AV)
				$170.00	(AW)
				$150.00	(AX)
				$185.00	(AY)
				$175.00	(AZ)
				$185.00	(BA)
				$100.00	(BB)
				$120.00	(BC)
				$150.00	(BD)
				$184.75	(BE)
				$120.00	(BF)
				$155.00	(BG)

DocuSign Envelope ID: 9C0D0BCE-1F94-4323-9C4D-6BA4D233D2D9

Item	Approx. Qty.	UOM	Article and Description	Unit Price	Awarded Vendor
			Item 15 - Continued		
				$120.00	(BH)
				$225.00	(BI)
				$100.00	(BJ)
				$125.00	(BK)
				$203.71	(BL)
				$66.00	(BM)
				$125.00	(BN)
				$285.00	(BO)
				$150.00	(BP)
				$195.00	(BQ)
				$125.00	(BR)
				$195.00	(BS)
				$150.00	(BT)
				$185.00	(BU)
				$157.00	(BV)
				$200.00	(BW)
				$260.00	(BX)
				$115.00	(BY)
16	**1**	**Mile**	**One way per mile cost, per service vehicle required, measured from the awarded Contractor's office/shop to the requested job site, for travel in excess of 50 miles one way, based on mapquest.com. Bidders should provide a Mileage Rate that does not exceed the IRS Mileage Rate linked above. If a Mileage Rate is not submitted by the Bidder, the defined rate shall be the default.**		
				$0.50	(AA)
				$1.25	(AB)
				$0.65	(AC)
				$2.50	(AD)
				$1.25	(AE)
				$0.66	(AF)
				$10.00	(AG)
				$1.26	(AH)
				$0.655	(AI)
				$0.66	(AJ)
				$1.00	(AK)
				$0.66	(AL)
				$0.65	(AM)
				$0.655	(AN)
				$1.55	(AO)
				$3.50	(AP)
			* per mile	$1.50	(AQ)
				$1.50	(AR)
				$20.00	(AS)
				$10.00	(AT)

DocuSign Envelope ID: 9C0D0BCE-1F94-4323-9C4D-6BA4D233D2D9

Item	Approx. Qty.	UOM	Article and Description	Unit Price	Awarded Vendor
			Item 16 - Continued		
				0.655	(AV)
				$0.65	(AW)
				$0.65	(AX)
				$4.50	(AY)
				$3.00	(AZ)
				$10.00	(BA)
				$0.655	(BB)
				$0.65	(BC)
				$4.00	(BD)
				$0.66	(BE)
				$8.50	(BF)
				$0.65	(BG)
			* cents per mile	$0.655	(BH)
				$1.50	(BI)
				$10.00	(BJ)
				$0.75	(BK)
				$0.74	(BL)
				$5.00	(BM)
				$1.00	(BN)
				$3.75	(BO)
				$0.87	(BP)
				$1.85	(BQ)
				$0.655	(BR)
				$1.25	(BS)
				$0.57	(BT)
				$2.50	(BU)
				$0.25	(BV)
				$1.75	(BW)
				$0.655	(BX)
				$8.50	(BY)

***** 16 Awarded Items Total*****

DocuSign

Certificate Of Completion

Envelope Id: 9C0D0BCE1F9443239C4D6BA4D233D2D9
Status: Completed
Subject: GSD/SPD Procurement#: 40-00000-23-00034 General Construction Award
Source Envelope:
Document Pages: 45
Signatures: 1
Certificate Pages: 5
Initials: 2
AutoNav: Enabled
EnvelopeId Stamping: Enabled
Time Zone: (UTC-07:00) Mountain Time (US & Canada)

Envelope Originator:
Tami Concha
1100 S Saint Francis Dr
Santa Fe, NM 87502
Tami.Concha@gsd.nm.gov
IP Address: 164.64.63.2

Record Tracking

Status: Original
12/29/2023 1:05:04 PM
Holder: Tami Concha
Tami.Concha@gsd.nm.gov
Location: DocuSign

Security Appliance Status: Connected
Pool: StateLocal

Storage Appliance Status: Connected
Pool: GSD
Location: DocuSign

Signer Events	Signature	Timestamp
Michael Saavedra Michael.Saavedra@gsd.nm.gov New Mexico General Services Security Level: Email, Account Authentication (None)	MS Signature Adoption: Pre-selected Style Using IP Address: 164.64.62.10	Sent: 12/29/2023 1:13:14 PM Viewed: 12/29/2023 1:13:44 PM Signed: 12/29/2023 1:13:50 PM
Electronic Record and Signature Disclosure: Accepted: 6/4/2020 11:04:51 AM ID: 9cac1b3e-4279-4c8f-b2b4-c607ea9821d8		
Tami Concha tami.concha@gsd.nm.gov Procurement Specialist II New Mexico General Services, State Purchasing Division Security Level: Email, Account Authentication (None)	JC Signature Adoption: Pre-selected Style Using IP Address: 164.64.62.10	Sent: 12/29/2023 1:13:54 PM Viewed: 12/29/2023 1:14:14 PM Signed: 12/29/2023 1:14:21 PM
Electronic Record and Signature Disclosure: Not Offered via DocuSign		
Natalie Martinez natalie.martinez1@gsd.nm.gov Deputy Director New Mexico General Services Security Level: Email, Account Authentication (None)	Natalie Martinez Signature Adoption: Pre-selected Style Using IP Address: 164.64.62.10	Sent: 12/29/2023 1:14:25 PM Viewed: 12/29/2023 1:23:23 PM Signed: 12/29/2023 1:27:07 PM
Electronic Record and Signature Disclosure: Not Offered via DocuSign		

In Person Signer Events	Signature	Timestamp

Editor Delivery Events	Status	Timestamp

Agent Delivery Events	Status	Timestamp

Intermediary Delivery Events	Status	Timestamp

Certified Delivery Events	Status	Timestamp

Carbon Copy Events	Status	Timestamp

Witness Events	Signature	Timestamp

Notary Events	Signature	Timestamp

Envelope Summary Events	Status	Timestamps
Envelope Sent	Hashed/Encrypted	12/29/2023 1:13:14 PM
Certified Delivered	Security Checked	12/29/2023 1:23:23 PM
Signing Complete	Security Checked	12/29/2023 1:27:07 PM
Completed	Security Checked	12/29/2023 1:27:07 PM

Payment Events	Status	Timestamps

Electronic Record and Signature Disclosure

ELECTRONIC RECORD AND SIGNATURE DISCLOSURE

A. ELECTRONIC RECORD AND SIGNATURE DISCLOSURE (ERSD)

From time to time, New Mexico General Services Department (GSD), on behalf of the State of New Mexico (SONM), may be required by law to provide you with certain written notices or disclosures. Stated below are the terms and conditions for GSD's providing you such notices and disclosures electronically through the DocuSign system. Please read this information carefully. If you are able to access this information electronically and agree to **this Electronic Record and Signature Disclosure (ERSD)**, please confirm your agreement by selecting the check-box next to "I agree to use electronic records and signatures" before clicking "CONTINUE" within the DocuSign system.

B. Obtaining paper copies

At any time up to twenty (20) calendar days following your use of DocuSign to electronically sign a document, you may request a paper copy of any record provided or made available electronically to you by GSD. You will have the ability to download and print documents SONM sends you through the DocuSign system during and immediately after the signing session and, if you elect to create a DocuSign account, you may access the documents for a twenty (20) calendar day period after such documents are first sent to you. Following the twenty (20) day period, if you want GSD to send you paper copies of any such documents from GSD's office, you will be charged a $1.00 per-page fee plus postage. You may request delivery of such paper copies from GSD by following the procedure stated in Section H, below.

C. Withdrawing your consent

If you decide to receive notices and disclosures from GSD electronically, you may at any time change your mind and inform GSD you want to receive required notices and disclosures only in paper format. The procedure concerning how you may inform GSD of your decision to receive future notices and disclosures in paper format as well as withdraw your consent to receive notices and disclosures electronically is stated in Section D, immediately below.

D. Consequences of changing your mind

If you elect to receive required notices and disclosures only in paper format, it will slow the speed with which GSD will be able to complete certain steps in specific transactions and deliver paper copies to you. GSD will need: (1) to send the required notices or disclosures to you in paper format; and (2) wait until GSD receives your acknowledgment of your receipt of such paper notices or disclosures. Further, you will no longer be able to use the DocuSign system to receive required notices and consents electronically from SONM or to electronically sign documents generated and sent to you from SONM.

E. All notices and disclosures will be sent to you electronically

Unless you inform GSD otherwise according to these procedures, GSD will electronically provide you through the DocuSign system all required notices, disclosures, authorizations, acknowledgements and other documents that are required to be provided or made available to you during the course of your electronic signature relationship with SONM. To reduce the possibility of inadvertent non-receipt, GSD prefers to provide all required notices and disclosures by the same method and to the same email or physical address that you furnish to GSD. Thus, you may receive the disclosures and notices electronically or in paper form. If you do not agree with this procedure, please inform GSD according to the procedures stated in Section I, below. Please also refer to Section D, immediately above, which states the consequences resulting from your declination of electronic delivery of notices and disclosures.

F. How to contact GSD:

You may inform General Services Department (GSD) of any changes you select regarding State Purchasing Division's (SPD) electronic communications with you, to request paper copies of certain information from SPD, and to withdraw your prior consent to receive notices and disclosures electronically by emailing your request(s) to SPD at: *GSD.SPDinfo@state.nm.us*

G. To advise SPD of your new email address

To inform SPD of a change in the email address to which SPD sends you notices and disclosures electronically, you must send an email to SPD at *GSD.SPDinfo@state.nm.us* and in the body of such request you must include your previous and new email addresses.

H. To request paper copies from SPD

To request delivery of paper copies of electronic notices and disclosures that DocuSign and/or SPD have previously provided to you, you must send an email to SPD at *GSD.SPDinfo@state.nm.us* and in the body of your email request state your email address, full name, mailing address, and telephone number. SPD will charge you a $1.00 per page copy fee plus postage.

I. To withdraw your consent with SPD

To inform SPD that you no longer wish to receive notices and disclosures in electronic format you may:

(1) Decline to sign a document from within a signing session, and on the subsequent page, select the check-box indicating you wish to withdraw your consent, or you may:

(2) Send SPD an email to *GSD.SPDinfo@state.nm.us* and in the body of your request state your email address, full name, mailing address, and telephone number.

J. Required hardware and software

The minimum system requirements for using the DocuSign system may change over time. The current DocuSign system requirements may be found at:
https://support.docusign.com/guides/signer-guide-signing-system-requirements

K. Acknowledging your access and consent to receive and sign documents electronically

To confirm that you are able to electronically access the information contained in this Electronic Record and Signature Disclosure (ERSD), please confirm that you have: (1) read this ERSD, and either: (2) you are able to print on paper or electronically save this ERSD for your future reference and access; or (3) you are able to email this ERSD to an email address where you will be able to print this ERSD on paper and/or save this ERSD for your future reference and access. Further, if you consent to receiving notices and disclosures from DocuSign and/or SPD exclusively in electronic format, then select the check-box next to "I agree to use electronic records and signatures," before you click "CONTINUE" within the DocuSign system.

By selecting the check-box next to "I agree to use electronic records and signatures," you confirm that:

- You have read this Electronic Record and Signature Disclosure (ERSD); and
- You can print this ERSD on paper, or you can save and/ or send this ERSD to a location where you can print this ERSD, for your future reference and access; and
- Until or unless you notify SPD as stated in this ERSD, you consent to exclusively receive through electronic means all notices, disclosures, authorizations, acknowledgements, and other documents that are required to be provided or made available to you by SPD during the course of your electronic signature relationship with SPD.

ACORD

CERTIFICATE OF LIABILITY INSURANCE

DATE (MM/DD/YYYY) 7/1/2025

THIS CERTIFICATE IS ISSUED AS A MATTER OF INFORMATION ONLY AND CONFERS NO RIGHTS UPON THE CERTIFICATE HOLDER. THIS CERTIFICATE DOES NOT AFFIRMATIVELY OR NEGATIVELY AMEND, EXTEND OR ALTER THE COVERAGE AFFORDED BY THE POLICIES BELOW. THIS CERTIFICATE OF INSURANCE DOES NOT CONSTITUTE A CONTRACT BETWEEN THE ISSUING INSURER(S), AUTHORIZED REPRESENTATIVE OR PRODUCER, AND THE CERTIFICATE HOLDER.

IMPORTANT: If the certificate holder is an ADDITIONAL INSURED, the policy(ies) must have ADDITIONAL INSURED provisions or be endorsed. If SUBROGATION IS WAIVED, subject to the terms and conditions of the policy, certain policies may require an endorsement. A statement on this certificate does not confer rights to the certificate holder in lieu of such endorsement(s).

PRODUCER License # 0757776 HUB International Insurance Services (SOW) 6565 Americas Parkway Suite 720 Albuquerque, NM 87110	CONTACT NAME: PHONE (A/C, No, Ext): (505) 828-4000 FAX (A/C, No): (866) 487-3972 E-MAIL ADDRESS: lauren.einerson@hubinternational.com
INSURED Advanced Environmental Solutions, Inc. & Robert & June Chavez 2318 Roldan Dr Belen, NM 87002--2627	INSURER(S) AFFORDING COVERAGE / NAIC # INSURER A : Steadfast Insurance Company 26387 INSURER B : Zurich Insurance Company INSURER C : Zurich American of Illinois 27855 INSURER D : INSURER E : INSURER F :

COVERAGES **CERTIFICATE NUMBER:** **REVISION NUMBER:**

THIS IS TO CERTIFY THAT THE POLICIES OF INSURANCE LISTED BELOW HAVE BEEN ISSUED TO THE INSURED NAMED ABOVE FOR THE POLICY PERIOD INDICATED. NOTWITHSTANDING ANY REQUIREMENT, TERM OR CONDITION OF ANY CONTRACT OR OTHER DOCUMENT WITH RESPECT TO WHICH THIS CERTIFICATE MAY BE ISSUED OR MAY PERTAIN, THE INSURANCE AFFORDED BY THE POLICIES DESCRIBED HEREIN IS SUBJECT TO ALL THE TERMS, EXCLUSIONS AND CONDITIONS OF SUCH POLICIES. LIMITS SHOWN MAY HAVE BEEN REDUCED BY PAID CLAIMS.

INSR LTR	TYPE OF INSURANCE	ADDL INSD	SUBR WVD	POLICY NUMBER	POLICY EFF (MM/DD/YYYY)	POLICY EXP (MM/DD/YYYY)	LIMITS	
A	X COMMERCIAL GENERAL LIABILITY						EACH OCCURRENCE	$ 1,000,000
	CLAIMS-MADE X OCCUR			GPL-4407668-00	7/1/2025	7/1/2026	DAMAGE TO RENTED PREMISES (Ea occurrence)	$ 25,000
							MED EXP (Any one person)	$ 5,000
							PERSONAL & ADV INJURY	$ 1,000,000
	GEN'L AGGREGATE LIMIT APPLIES PER:						GENERAL AGGREGATE	$ 2,000,000
	X POLICY PRO-JECT LOC						PRODUCTS - COMP/OP AGG	$ 2,000,000
	OTHER:							$
B	AUTOMOBILE LIABILITY						COMBINED SINGLE LIMIT (Ea accident)	$ 1,000,000
	X ANY AUTO			BAP-4401321-00	7/1/2025	7/1/2026	BODILY INJURY (Per person)	$
	OWNED AUTOS ONLY / SCHEDULED AUTOS						BODILY INJURY (Per accident)	$
	HIRED AUTOS ONLY / NON-OWNED AUTOS ONLY						PROPERTY DAMAGE (Per accident)	$
								$
A	UMBRELLA LIAB X OCCUR						EACH OCCURRENCE	$ 4,000,000
	X EXCESS LIAB CLAIMS-MADE			SXS-4407667-00	7/1/2025	7/1/2026	AGGREGATE	$
	DED X RETENTION $ 0						Aggregate	$ 4,000,000
C	WORKERS COMPENSATION AND EMPLOYERS' LIABILITY						PER STATUTE / OTH-ER	
	ANY PROPRIETOR/PARTNER/EXECUTIVE OFFICER/MEMBER EXCLUDED? Y / N (Mandatory in NH)	N / A		WC-4302367-00	7/1/2025	7/1/2026	E.L. EACH ACCIDENT	$ 1,000,000
	If yes, describe under DESCRIPTION OF OPERATIONS below						E.L. DISEASE - EA EMPLOYEE	$ 1,000,000
							E.L. DISEASE - POLICY LIMIT	$ 1,000,000
A	Pollution / Environm			GPL-4407668-00	7/1/2025	7/1/2026	Occur.	1,000,000
A	Professional Liabili			GPL-4407668-00	7/1/2025	7/1/2026	Occur.	1,000,000

DESCRIPTION OF OPERATIONS / LOCATIONS / VEHICLES (ACORD 101, Additional Remarks Schedule, may be attached if more space is required)

CERTIFICATE HOLDER

City of Santa Fe Fuel Facility
1142 Siler
Santa Fe, NM 87502

CANCELLATION

SHOULD ANY OF THE ABOVE DESCRIBED POLICIES BE CANCELLED BEFORE THE EXPIRATION DATE THEREOF, NOTICE WILL BE DELIVERED IN ACCORDANCE WITH THE POLICY PROVISIONS.

AUTHORIZED REPRESENTATIVE



© 1988-2015 ACORD CORPORATION. All rights reserved.
The ACORD name and logo are registered marks of ACORD

GB Packet_Amend 1_AES_Siler Fuel Station_12 9 2025 MW2 ELK4 CG TF SB

Final Audit Report 2026-01-06

Created:	2026-01-06
By:	Elizabeth Kahahane (elkahahane@santafenm.gov)
Status:	Signed
Transaction ID:	CBJCHBCAABAAOkcVBetFSRH20d19ksKFiNHoE0jL5v9g

"GB Packet_Amend 1_AES_Siler Fuel Station_12 9 2025 MW2 ELK4 CG TF SB" History

Document created by Elizabeth Kahahane (elkahahane@santafenm.gov)
2026-01-06 - 6:13:55 PM GMT- IP address: 63.232.20.2

Document emailed to MARLISA WILSON (mbwilson@santafenm.gov) for signature
2026-01-06 - 6:18:40 PM GMT

Email viewed by MARLISA WILSON (mbwilson@santafenm.gov)
2026-01-06 - 6:27:29 PM GMT- IP address: 63.232.20.2

Document e-signed by MARLISA WILSON (mbwilson@santafenm.gov)
Signature Date: 2026-01-06 - 6:30:01 PM GMT - Time Source: server- IP address: 63.232.20.2

Document emailed to Timothy Farrell (tgfarrell@santafenm.gov) for signature
2026-01-06 - 6:30:07 PM GMT

Email viewed by Timothy Farrell (tgfarrell@santafenm.gov)
2026-01-06 - 8:58:33 PM GMT- IP address: 104.47.65.254

Document e-signed by Timothy Farrell (tgfarrell@santafenm.gov)
Signature Date: 2026-01-06 - 11:00:36 PM GMT - Time Source: server- IP address: 63.232.20.2

Document emailed to JOHN BURNETT (jsburnett@santafenm.gov) for signature
2026-01-06 - 11:00:41 PM GMT

Email viewed by JOHN BURNETT (jsburnett@santafenm.gov)
2026-01-06 - 11:01:19 PM GMT- IP address: 63.232.20.2

Document e-signed by JOHN BURNETT (jsburnett@santafenm.gov)
Signature Date: 2026-01-06 - 11:01:57 PM GMT - Time Source: server- IP address: 63.232.20.2

Powered by Adobe Acrobat Sign

Agreement completed.

2026-01-06 - 11:01:57 PM GMT

GB-600-Advanced Environmental Solutions, Inc.

Final Audit Report 2026-01-09

Created:	2026-01-07
By:	ALYSSA PEREZ (aeperez@santafenm.gov)
Status:	Signed
Transaction ID:	CBJCHBCAABAAS9FRY4Zldp4m-qmHqKyA1ZLteKqGjaly

"GB-600-Advanced Environmental Solutions, Inc." History

Document created by ALYSSA PEREZ (aeperez@santafenm.gov)
2026-01-07 - 4:03:07 PM GMT- IP address: 63.232.20.2

Document emailed to ajhopkins@santafenm.gov ajhopkins@santafenm.gov (ajhopkins@santafenm.gov) for signature
2026-01-07 - 4:10:37 PM GMT

Email viewed by ajhopkins@santafenm.gov ajhopkins@santafenm.gov (ajhopkins@santafenm.gov)
2026-01-08 - 4:56:38 PM GMT- IP address: 104.47.65.254

Document e-signed by ajhopkins@santafenm.gov ajhopkins@santafenm.gov (ajhopkins@santafenm.gov)
Signature Date: 2026-01-08 - 4:57:00 PM GMT - Time Source: server- IP address: 63.232.20.2

Document emailed to Rebecca Lovato-Sanouvong (ralovatosanouvong@santafenm.gov) for signature
2026-01-08 - 4:57:07 PM GMT

Email viewed by Rebecca Lovato-Sanouvong (ralovatosanouvong@santafenm.gov)
2026-01-08 - 4:59:39 PM GMT- IP address: 104.47.65.254

Document e-signed by Rebecca Lovato-Sanouvong (ralovatosanouvong@santafenm.gov)
Signature Date: 2026-01-08 - 5:01:30 PM GMT - Time Source: server- IP address: 63.232.20.2

Document sent to JoAnn Lovato (jdlovato@santafenm.gov) and Travis Dutton-Leyda (tkduttonleyda@santafenm.gov) for signature. One of them to sign
2026-01-08 - 5:01:37 PM GMT

Document e-signed by Travis Dutton-Leyda (tkduttonleyda@santafenm.gov)
Signature Date: 2026-01-08 - 5:07:34 PM GMT - Time Source: server- IP address: 98.97.114.141

Document emailed to BRIAN MOYA (bjmoya@santafenm.gov) for signature
2026-01-08 - 5:07:40 PM GMT

Email viewed by BRIAN MOYA (bjmoya@santafenm.gov)

2026-01-09 - 0:04:15 AM GMT- IP address: 174.198.11.250

Document e-signed by BRIAN MOYA (bjmoya@santafenm.gov)

Signature Date: 2026-01-09 - 0:35:58 AM GMT - Time Source: server- IP address: 63.232.20.2

Agreement completed.

2026-01-09 - 0:35:58 AM GMT

Powered by
Adobe
Acrobat Sign

CITY OF SANTA FE

Date: January 7, 2026

To: Governing Body

From: Carol Swenson, Public Works Business Operations Manager CS

Via: Sam Burnett, Interim Public Works Department Director SB
Marcos Esquibel, Interim Complete Streets Director Marcos Esquibel

Subject: Capital Appropriation Agreement Project C5223169 Governor Miles Road

---

ACTION:
Request for Approval of Capital Appropriation Agreement with New Mexico Department of Transportation in the Total Amount of $300,000 for Project C5223169 Improvements to Governor Miles Road from Richards Avenue to Nizhoni Drive with a Reversion Date of June 30, 2026. (Romella Glorioso-Moss, Complete Streets Capital Projects Manager, rsglorioso-moss@santafenm.gov)

Request for Approval of a Budget Amendment Resolution (BAR) to Allocate $300,000 from the 2022 Capital Appropriation to FY26 Revenue and WIP Design.

BACKGROUND AND SUMMARY:
The City of Santa Fe has been awarded Capital Appropriation Project C5223169 in the amount of $300,000 "…to acquire easements and rights of way and to plan, design, construct and repair Governor Miles Road from Richards Avenue to Nizhoni Drive in Santa Fe in Santa Fe County."

This appropriation does not require an allocation for Art in Public Places (AIPP) and the total of $300,000 is available for project budget allocation.

ATTACHMENTS:
Grant Agreement NMDOT C5223169
PLID Form
BAR

DocuSign Envelope ID: 386A9DA1-182E-4831-B175-10ABB5E884BA

Contract Number: _____
Vendor Number: 0000054360
Control Number: C5223169

STATE OF NEW MEXICO
DEPARTMENT OF TRANSPORTATION
FUND 89200 CAPITAL APPROPRIATION PROJECT

THIS AGREEMENT is between the Department of Transportation, hereinafter called the "Department" or abbreviation such as "NMDOT", and City of Santa Fe, hereinafter called the "Grantee". This Agreement is effective as of the date of the last party to sign it on the signature page below.

RECITALS

WHEREAS, in the Laws of 2022, SB212, Chapter 53, Section 36, Subsection 87, the Legislature made an appropriation to the Department, funds from which the Department is making available to the Grantee pursuant to this Agreement; and

WHEREAS, the Department is granting to Grantee, and the Grantee is accepting the grant of, funds from this appropriation, in accordance with the terms and conditions of this Agreement; and

WHEREAS, pursuant to the NMSA 1978, Section 67-3-28, as amended, and State Highway Commission Policy No. 44, the Department has the authority to enter into this Grant Agreement.

AGREEMENT

NOW, THEREFORE, in consideration of the mutual covenants and obligations contained herein, the parties hereby mutually agree as follows:

ARTICLE I. PROJECT DESCRIPTION, AMOUNT OF GRANT AND REVERSION DATE

A. The project that is the subject of this Agreement is described as follows:

DFA Appropriation ID G3169 NMDOT Control Number C5223169 **$300,000**
APPROPRIATION REVERSION DATE: 6/30/2026
Laws of 2022, Chapter 53, Section 36, Subsection 87, Three Hundred Thousand Dollars and No Cents ($300,000), to acquire easements and rights of way and to plan, design, construct and repair Governor Miles road from Richards avenue to Nizhoni drive in Santa Fe in Santa Fe county .

The Grantee's total reimbursements shall not exceed Three Hundred Thousand Dollars and No Cents $300,000 (the "Appropriation Amount") minus the allocation for Art in Public Places ("AIPP amount")[1], if

[1] The AIPP amount is "an amount of money equal to one percent or two hundred thousand dollars ($200,000), whichever is less, of the amount of money appropriated for new construction or any major renovation exceeding one hundred thousand dollars ($100,000)." Section 13-4A-4 NMSA 1978.

applicable, Zero Dollars and No Cents ($ 0.00), which equals Three Hundred Thousand Dollars and No Cents (**$300,000**) (the "Adjusted Appropriation Amount").

In the event of a conflict among the Appropriation Amount, the Reversion Date, as defined herein and/or the purpose of the Project, as set forth in this Agreement, and the corresponding appropriation language in the laws cited above in this Article I(A), the language of the laws cited herein shall control.

This project is referred to throughout the remainder of this Agreement as the "Project"; the information contained in Article I(A) is referred to collectively throughout the remainder of this Agreement as the "Project Description." Optional Attachment A sets forth additional or more stringent requirements and conditions, which are incorporated by this reference as if set forth fully herein. If Optional Attachment A imposes more stringent requirements than any requirement set forth in this Agreement, the more stringent requirements of Attachment A shall prevail, in the event of irreconcilable conflict. The Grantee shall reference the Project's number in all correspondence with and submissions to the Department concerning the Project, including, but not limited to, Requests for Payment and reports.

ARTICLE II. LIMITATION ON DEPARTMENT'S OBLIGATION TO MAKE GRANT DISBURSEMENT TO GRANTEE

A. Upon the Effective Date of this Agreement, for permissible purposes within the scope of the Project Description, the Grantee shall only be reimbursed monies for which the Department has issued and the Grantee has received a Notice of Department's Obligation to Reimburse[2] Grantee (hereinafter referred to as "Notice of Obligation"). This Grant Agreement and the disbursement of any and all amounts of the above referenced Adjusted Appropriation Amount are expressly conditioned upon the following:

(i) Irrespective of any Notice of Obligation, the Grantee's expenditures shall be made on or before the Reversion Date and, if applicable, an Early Termination Date (i.e., the goods have been delivered and accepted or the title to the goods has been transferred to the Grantee and/or the services have been rendered for the Grantee); and

(ii) The total amount received by the Grantee shall not exceed the lesser of: (a) the Adjusted Appropriation Amount identified in Article I(A) herein or (b) the total of all amounts stated in the Notice(s) of Obligation evidencing that the Department has received and accepted the Grantee's Third Party Obligation(s), as defined in subparagraph iii of this Article II(A); and

(iii) The Grantee's expenditures were made pursuant to the State Procurement Code and execution of binding written obligations or purchase orders with third party contractors or vendors for the provision of services, including professional services, or the purchase of tangible personal property and real property for the Project, hereinafter referred to as "Third Party Obligations"; and

(iv) The Grantee's submittal of timely Requests for Payment in accordance with the procedures set forth in Article IX of this Agreement; and

(v) In the event that capital assets acquired with Project funds are to be sold, leased, or licensed to or operated by a private entity, the sale, lease, license, or operating agreement:
   a. must be approved by the applicable oversight entity (if any) in accordance with law; or
   b. if no oversight entity is required to approve the transaction, the Department must approve the transaction as complying with law.

[2] "Reimburse" as used throughout this Agreement includes Department payments to the Grantee for invoices received, but not yet paid, by the Grantee from a third party contractor or vendor, if the invoices comply with the provisions of this Agreement and are a valid liability of the Grantee.

Prior to the sale, lease, license, or operating agreement being approved pursuant to Articles II(A)(v)(a) and II(A)(v)(b) herein, the Department may, in its sole and absolute discretion and unless inconsistent with State Board of Finance imposed conditions, reimburse the Grantee for necessary expenditures incurred to develop the Project sufficiently to make the sale, lease, license, or operating agreement commercially feasible, such as plan and design expenditures; and

(vi) The Grantee's submission of documentation of all Third Party Obligations and amendments thereto (including terminations) to the Department and the Department's issuance and the Grantee's receiving of a Notice of Obligation for a particular amount in accordance with the terms of this Agreement shall be governed by the following:

a. The Grantee shall submit to the Department one copy of all Third Party Obligations and amendments thereto (including terminations) as soon as possible after execution by the Third Party **but prior to execution by the Grantee.**

b. Grantee acknowledges and agrees that if it chooses to enter into a Third Party Obligation prior to receiving a Notice of Obligation that covers the expenditure, it is solely responsible for such obligations.

c. The Department may, in its sole and absolute discretion, issue to Grantee a Notice of Obligation for the particular amount of that Third Party Obligation that only obligates the Department to reimburse Grantee's expenditures made on or before the Reversion Date or an Early Termination Date. The current Notice of Obligation form is attached to this Agreement as Exhibit 2.

d. The date the Department signs the Notice of Obligation is the date that the Department's Notice of Obligation is effective. After that date, the Grantee is authorized to budget the particular amount set forth in the Notice of Obligation, execute the Third Party Obligation and request the Third Party to begin work. Payment for any work performed or goods received prior to the effective date of the Notice of Obligation is wholly and solely the obligation of the Grantee.

B. The Grantee shall implement, in all respects, the Project. The Grantee shall provide all necessary qualified personnel, material, and facilities to implement the Project. The Grantee shall finance its share (if any) of the costs of the Project, including all Project overruns.

C. Project funds shall not be used for purposes other than those specified in the Project Description.

D. Unless specifically allowed by law, Project funds cannot be used to reimburse Grantee for indirect Project costs.

ARTICLE III. NOTICE PROVISIONS AND GRANTEE AND DEPARTMENT DESIGNATED REPRESENTATIVES

Whenever written notices, including written decisions, are to be given or received, related to this Agreement, the following provisions shall apply.

The Grantee designates the person(s) listed below, or their successor, as their official representative(s) concerning all matters related to this Agreement:

Grantee: City of Santa Fe

Name: David Chapman
Title: Grants Administrator
Address: P.O. Box 909, Santa Fe, New Mexico 87504
Email: dachapman@santafenm.gov
Telephone: 505-955-2012

The Grantee designates the person(s) listed below, or their successor, as their Fiscal Officer or Fiscal Agent concerning all matters related to this Agreement:

Grantee: City of Santa Fe
Name: Erika Lujan
Title: Grants Manager
Address: PO Box 909, Santa Fe, NM 87504
Email: evlujan@santafenm.gov
Telephone: 505-479-1334

The Department designates the persons listed below, or their successors, as the Points of Contact for matters related to this Agreement.

Department: Department of Transportation District 5 Office
Name: Amanda Nino
Title: Capital Outlay District Coordinator
Address: P.O. Box 4127, Santa Fe, NM 87502
Email: Amanda.Nino@dot.nm.gov
Telephone: 505-660-6357

The Grantee and the Department agree that either party shall send all notices, including written decisions, related to this Agreement to the above named persons by email or regular mail. In the case of mailings, notices shall be deemed to have been given and received upon the date of the receiving party's actual receipt or five calendar days after mailing, whichever shall first occur. In the case of email transmissions, the notice shall be deemed to have been given and received on the date reflected on the delivery receipt of email.

ARTICLE IV. REVERSION DATE, TERM, DEADLINE TO EXPEND FUNDS

A. As referenced in Article I(A), the applicable law establishes a date by which Project funds must be expended by Grantee, which is referred to throughout the remainder of this Agreement as the "Reversion Date." Upon being duly executed by both parties, this Agreement shall be effective as of the date of execution by the Department. It shall terminate on 6/30/2026 the Reversion Date unless Terminated Before Reversion Date ("Early Termination") pursuant to Article V herein.

B. The Project's funds must be expended on or before the Reversion Date and, if applicable, Early Termination Date of this Agreement. For purposes of this Agreement, it is not sufficient for the Grantee to encumber the Project funds on its books on or before the Project's Reversion Date or Early Termination Date. Funds are expended and an expenditure has occurred as of the date that a particular quantity of goods are delivered to and received by the Grantee or title to the goods is transferred to the Grantee and/or as of the date

particular services are rendered for the Grantee. Funds are ***not*** expended and an expenditure has ***not*** occurred as of the date they are encumbered by the Grantee pursuant to a contract or purchase order with a third party.

ARTICLE V. EARLY TERMINATION

A. Early Termination Before Reversion Date Due to Completion of the Project or Complete Expenditure of the Adjusted Appropriation or Violation of this Agreement

Early Termination includes:

(i) Termination due to completion of the Project before the Reversion Date; or

(ii) Termination due to complete expenditure of the Adjusted Appropriation Amount before the Reversion Date; or

(iii) Termination for violation of the terms of this Agreement; or

(iv) Termination for suspected mishandling of public funds, including but not limited to, fraud, waste, abuse, and conflicts of interest.

Either the Department or the Grantee may early terminate this Agreement prior to the Reversion Date by providing the other party with a minimum of fifteen (15) days' advance, written notice of early termination. Grantee hereby waives any rights to assert an impairment of contract claim against the Department or the State of New Mexico in the event of Early Termination of this Agreement by the Department pursuant to Article V(A).

B. Early Termination Before Reversion Date Due to Non-appropriation

The terms of this Agreement are expressly made contingent upon sufficient appropriations and authorization being made by the Legislature of New Mexico for the performance of this Agreement. Throughout this Agreement the term "non-appropriate" or "non-appropriation" includes the following actions by the New Mexico Legislature: deauthorization, reauthorization or revocation of a prior authorization. The Legislature may choose to non-appropriate the Appropriation referred to in Article I and, if that occurs, the Department shall early terminate this Agreement for non-appropriation by giving the Grantee written notice of such termination, and such termination shall be effective as of the effective date of the law making the non-appropriation. The Department's decision as to whether sufficient appropriations or authorizations are available shall be accepted by the Grantee and shall be final. Grantee hereby waives any rights to assert an impairment of contract claim against the Department or the State of New Mexico in the event of Early Termination of this Agreement by the Department pursuant to Article V(B).

C. Limitation on Department's Obligation to Make Grant Disbursements to Grantee in the Event of Early Termination

In the event of Early Termination of this Agreement by either party, the Department's sole and absolute obligation to reimburse the Grantee is expressly conditioned upon the limitations set forth Article II.

ARTICLE VI. SUSPENSION OF NEW OR FURTHER OBLIGATIONS

A. The Department may choose, in its sole and absolute discretion, to provide written notice to the Grantee to suspend entering into new and further obligations. Upon the receipt of such written notice by the Grantee:

(i) The Grantee shall immediately suspend entering into new or further written obligations with third parties; and

(ii) The Department will suspend the issuance of any new or further Notice of Obligation under this Agreement; and
(iii) The Department may direct the Grantee to implement a corrective action plan in accordance with Article VI(D) herein.

B. In the event of Suspension of this Agreement, the Department's sole and absolute obligation to reimburse the Grantee is expressly conditioned upon the limitations set forth in Article II herein.

C. A suspension of new or further obligations under this Agreement shall remain in effect unless or until the date the Grantee receives written notice given by the Department informing the Grantee that the Suspension has been lifted or that the Agreement has been Early Terminated in accordance with Article V herein. If the Suspension is lifted, the Department will consider further requests for Notice of Obligation.

D. Corrective Action Plan in the Event of Suspension

In the event that the Department chooses, in its sole and absolute discretion to direct the Grantee to suspend entering into new or further written obligations with third parties pursuant to Article VI(A), the Department may, but is not obligated to, require the Grantee to develop and implement a written corrective action plan to remedy the grounds for the Suspension. Such corrective action plan must be approved by the Department and be signed by the Grantee. Failure to sign a corrective action plan or meet the terms and deadlines set forth in the signed corrective action plan, is hereby deemed a violation of the terms of this Agreement for purposes of Early Termination, Article V(A)(iii). The corrective action plan is in addition to, and not in lieu of, any other equitable or legal remedy, including but not limited to Early Termination.

ARTICLE VII. AMENDMENT

This Agreement shall not be altered, changed, or amended except by instrument in writing duly executed by both the parties hereto.

ARTICLE VIII. REPORTS

A. Database Reporting

The Grantee shall report quarterly Project activity by entering such Project information as the Department and the Department of Finance and Administration may require, such information entered directly into a database maintained by the Department of Finance and Administration (Budget & Formulation Management System). Additionally, the Grantee shall certify on the Request for Payment form (Exhibit 1) that updates have been maintained and are current in the database. The Grantee hereby acknowledges that failure to perform and/or certify updates into the database will delay or potentially jeopardize the reimbursement of funds. The Department shall give Grantee a minimum of thirty (30) days' advance written notice of any changes to the information the Grantee is required to report.

Quarterly reports shall be due on the last day of the month that is 30 days prior to the end of the quarter following execution of this Agreement by the Department and ending during the quarter of the submission of the final request for reimbursement for the Project, or the following quarter.

B. Requests for Additional Information/Project Inspection

During the term of this Agreement and during the period of time during which the Grantee must maintain records pursuant to Article VIII, the Department may:

(i) request such additional information regarding the Project as it deems necessary; and

(ii) conduct, at reasonable times and upon reasonable notice, onsite inspections of the Project.

Grantee shall respond to such requests for additional information within a reasonable period of time, as established by the Department.

ARTICLE IX. REQUEST FOR PAYMENT PROCEDURES AND DEADLINES

A. The Grantee shall request payment by submitting a Request for Payment, in the form attached hereto as Exhibit 1. Payment requests are subject to the following procedures:

(i) The Grantee must submit a Request for Payment; and

(ii) Each Request for Payment must contain proof of payment by the Grantee or liabilities incurred by the Grantee showing that the expenditures are valid or are liabilities incurred by the Grantee in the form of actual unpaid invoices received by the Grantee for services rendered by a third party or items of tangible personal property received by the Grantee for the implementation of the Project; provided, however, that the Grantee may be reimbursed for unpaid liabilities only if the Department, in its sole and absolute discretion, agrees to do so and in accordance with any special conditions imposed by the Department.

(iii) In cases where the Grantee is submitting a Request for Payment to the Department based upon invoices received, but not yet paid, by the Grantee from a third party contractor or vendor, if the invoices comply with the provisions of this Agreement and are a valid liability of the Grantee, the Grantee shall make payment to those contractors or vendors within five (5) business days from the date of receiving reimbursement from the Department or such shorter period of time as the Department may prescribe in writing. The Grantee is required to certify to the Department proof of payment to the third party contractor or vendor within ten (10) business days from the date of receiving reimbursement from the Department.

B. The Grantee must obligate 5% of the Adjusted Appropriation Amount within six months of acceptance of the grant agreement and must have expended no less than 85% of the Adjusted Appropriation Amount six months prior to the reversion date.

C. **Deadlines**

Requests for Payments shall be submitted by Grantee to the Department on the earlier of:

(i) Immediately as they are received by the Grantee but at a minimum thirty (30) days from when the expenditure was incurred or liability of the Grantee was ~~a~~pproved as evidenced by an unpaid invoice received by the Grantee from a third party contractor or vendor; or

(ii) Twenty (20) days from date of Early Termination; or

(iii) Twenty (20) days from the Reversion Date.

D. The Grantee's failure to abide by the requirements set forth in Article II and Article IX herein will result in the denial of its Request for Payment or will delay the processing of Requests for Payment. The Department has the right to reject a payment request for the Project unless and until it is satisfied that the expenditures in the Request for Payment are for permissible purposes within the meaning of the Project Description and that the expenditures and the Grantee are otherwise in compliance with this Agreement, including but not limited to, compliance with the reporting requirements and the requirements set forth in

DocuSign Envelope ID: 386A9DA1-182E-4831-B175-10ABB5E884BA

Article II herein to provide Third Party Obligations and the Deadlines set forth in Article IX herein. The Department's ability to reject any Request for Payment is in addition to, and not in lieu of, any other legal or equitable remedy available to the Department due to Grantee's violation of this Agreement.

ARTICLE X. PROJECT CONDITIONS AND RESTRICTIONS; REPRESENTATIONS AND WARRANTIES

A. The following general conditions and restrictions are applicable to the Project:

(i) The Project's funds must be spent in accordance with all applicable state laws, regulations, policies, and guidelines, including, but not limited to, the State Procurement Code (or local procurement ordinance, where applicable).

(ii) The Project must be implemented in accordance with the New Mexico Public Works Minimum Wage Act, Section 13-4-10 through 13-4-17 NMSA 1978, as applicable. Every contract or project in excess of sixty thousand dollars ($60,000) that the Grantee is a party to for construction, alteration, demolition or repair or any combination of these, including painting and decorating, of public buildings, public works or public roads and that requires or involves the employment of mechanics, laborers or both shall contain a provision stating the minimum wages and fringe benefits to be paid to various classes of laborers and mechanics, shall be based upon the wages and benefits that will be determined by the New Mexico Department of Workforce Solutions to be prevailing for the corresponding classes of laborers and mechanics employed on contract work of a similar nature in the locality. Further, every contract or project shall contain a stipulation that the contractor, subcontractor, employer or a person acting as a contractor shall pay all mechanics and laborers employed on the site of the project, unconditionally and not less often than once a week and without subsequent unlawful deduction or rebate on any account, the full amounts accrued at time of payment computed at wage rates and fringe benefit rates not less than those determined pursuant to Section 13-4-11 (B) NMSA 1978 to be the prevailing wage rates and prevailing fringe benefit rates issued for the project.

(iii) The Project may only benefit private entities in accordance with applicable law, including, but not limited to, Article IX, Section 14 of the Constitution of the State of New Mexico, the "Anti-Donation Clause."

(iv) The Grantee shall not for a period of 10 years from the date of this agreement convert any property acquired, built, renovated, repaired, designed or developed with the Project's funds to uses other than those specified in the Project Description without the Department's and the Board of Finance's express, advance, written approval, which may include a requirement to reimburse the State for the cost of the project, transfer proceeds from the disposition of property to the State, or otherwise provide consideration to the State.

(v) The Grantee shall comply with all federal and state laws, rules and regulations pertaining to equal employment opportunity. In accordance with all such laws, rules and regulations the Grantee agrees to assure that no person shall, on the grounds of race, color, national origin, sex, sexual preference, age or handicap, be excluded from employment with Grantee, be excluded from participation in the Project, be denied benefits or otherwise be subject to discrimination under, any activity performed under this Agreement. If Grantee is found to be not in compliance with these requirements during the life of this Agreement, Grantee agrees to take appropriate steps to correct any deficiencies. The Grantee's failure to implement such appropriate steps within a reasonable time constitutes grounds for terminating this Agreement.

DocuSign Envelope ID: 386A9DA1-182E-4831-B175-10ABB5E884BA

B. The Grantee hereby represents and warrants the following:

(i) The Grantee has the legal authority to receive and expend the Project's funds.

(ii) This Agreement has been duly authorized by the Grantee, the person executing this Agreement has authority to do so, and, once executed by the Grantee, this Agreement shall constitute a binding obligation of the Grantee, enforceable according to its terms.

(iii) This Agreement and the Grantee's obligations hereunder do not conflict with any law or ordinance or resolution applicable to the Grantee, the Grantee's charter (if applicable), or any judgment or decree to which the Grantee is subject.

(iv) The Grantee has independently confirmed that the Project Description, including, but not limited to, the amount and Reversion Date, is consistent with the underlying appropriation in law.

(v) The Grantee's governing body has duly adopted or passed as an official act a resolution, motion, or similar action authorizing the person identified as the official representative of the Grantee to sign the Agreement and to sign Requests for Payment.

(vi) The Grantee shall abide by New Mexico laws regarding conflicts of interest, governmental conduct and whistleblower protection. The Grantee specifically agrees that no officer or employee of the local jurisdiction or its designees or agents, no member of the governing body, and no other public official of the locality who exercises any function or responsibility with respect to this Grant, during their tenure or for one year thereafter, shall have any interest, direct or indirect, in any contract or subcontract, or the proceeds thereof, for work to be performed or goods to be received, pursuant to this Grant. Further, Grantee shall require all of its contractors to incorporate in all subcontracts the language set forth in this paragraph prohibiting conflicts of interest.

(vii) No funds have been paid or will be paid, by or on behalf of the Grantee, to any person for influencing or attempting to influence an officer or employee of this or any agency or body in connection with the awarding of any Third Party Obligation and that the Grantee shall require certifying language prohibiting lobbying to be included in the award documents for all subawards, including subcontracts, loans and cooperative agreements. All subrecipients shall be required to certify accordingly.

ARTICLE XI. STRICT ACCOUNTABILITY OF RECEIPTS AND DISBURSEMENTS; PROJECT RECORDS

A. The Grantee shall be strictly accountable for receipts and disbursements relating to the Project's funds. The Grantee shall follow generally accepted accounting principles, and, if feasible, maintain a separate bank account or fund with a separate organizational code, for the funds to assure separate budgeting and accounting of the funds.

B. For a period of six (6) years following the Project's completion, the Grantee shall maintain all Project related records, including, but not limited to, all financial records, requests for proposals, invitations to bid, selection and award criteria, contracts and subcontracts, advertisements, minutes of pertinent meetings, as well as records sufficient to fully account for the amount and disposition of the total funds from all sources budgeted for the Project, the purpose for which such funds were used, and such other records as the Department shall prescribe.

C. The Grantee shall make all Project records available to the Department, the Department of Finance and Administration, and the New Mexico State Auditor upon request. With respect to the funds that are the

subject of this Agreement, if the State Auditor or the Department of Finance and Administration finds that any or all of these funds were improperly expended, the Grantee may be required to reimburse to the State of New Mexico, to the originating fund, any and all amounts found to be improperly expended.

ARTICLE XII. IMPROPERLY REIMBURSED FUNDS

If the Department determines that part or all of the Appropriation Amount was improperly reimbursed to Grantee, including but not limited to, Project funds reimbursed to Grantee based upon fraud, mismanagement, misrepresentation, misuse, violation of law by the Grantee, or violation of this Agreement, the Grantee shall return such funds to the Department for disposition in accordance with law.

ARTICLE XIII. LIABILITY

Neither party shall be responsible for liability incurred as a result of the other party's acts or omissions in connection with this Agreement. Any liability incurred in connection with this Agreement is subject to immunities and limitations of the New Mexico Tort Claims Act.

ARTICLE XIV. SCOPE OF AGREEMENT

This Agreement constitutes the entire and exclusive agreement between the Grantee and Department concerning the subject matter hereof. The Agreement supersedes any and all prior or contemporaneous agreements, understandings, discussions, communications, and representations, written or verbal.

ARTICLE XV. REQUIRED NON-APPROPRIATIONS CLAUSE IN CONTRACTS FUNDED IN WHOLE OR PART BY FUNDS MADE AVAILABLE UNDER THIS AGREEMENT

The Grantee acknowledges, warrants, and agrees that Grantee shall include a "non-appropriations" clause in all contracts between it and other parties that are (i) funded in whole or part by funds made available under this Agreement and (ii) entered into after the effective date of this Agreement that states:

"The terms of this Agreement are contingent upon sufficient appropriations and authorization being made by the Legislature of New Mexico for the performance of this Agreement. If sufficient appropriations and authorization are not made by the Legislature, the City of Santa Fe may immediately terminate this Agreement by giving Contractor written notice of such termination. The City of Santa Fe's decision as to whether sufficient appropriations are available shall be accepted by the Contractor and shall be final. Contractor hereby waives any rights to assert an impairment of contract claim against the City of Santa Fe or the Department of Transportation or the State of New Mexico in the event of immediate or Early Termination of this Agreement by the City of Santa Fe or the Department"

ARTICLE XVI. REQUIRED TERMINATION CLAUSE IN CONTRACTS FUNDED IN WHOLE OR PART BY FUNDS MADE AVAILABLE UNDER THIS AGREEMENT

Grantee acknowledges, warrants, and agrees that Grantee shall include the following termination clause in all contracts that are (i) funded in whole or part by funds made available under this Agreement and (ii) entered into after the effective date of this Agreement:

"This contract is funded in whole or in part by funds made available under a Department of Transportation Grant Agreement. Should the Department of Transportation early terminate the grant agreement, the City of Santa Fe may early terminate this contract by providing Contractor written notice of such termination. In the event of termination pursuant to this paragraph, the City of Santa Fe only liability shall be to pay Contractor for acceptable goods delivered and services rendered before the termination date."

Grantee hereby waives any rights to assert an impairment of contract claim against the Department or the State of New Mexico in the event of Early Termination of this Agreement by the Department.

XVII. COMPLIANCE WITH UNIFORM FUNDING CRITERIA.

A. Throughout the term of this Agreement, Grantee shall:

1. submit all reports of annual audits and agreed upon procedures required by Section 12-6-3(A)-(B) NMSA 1978 by the due dates established in 2.2.2 NMAC, reports of which must be a public record pursuant to Section 12-6-5(A) NMSA 1978 within forty-five days of delivery to the State Auditor;
2. have a duly adopted budget for the current fiscal year approved by its budgetary oversight agency (if any);
3. timely submit all required financial reports to its budgetary oversight agency (if any); and
4. have adequate accounting methods and procedures to expend grant funds in accordance with applicable law and account for and safeguard grant funds and assets acquired by grant funds.

B. In the event Grantee fails to comply with the requirements of Paragraph A of this Article XVII, the Department may take one or more of the following actions:

1. suspend new or further obligations pursuant to Article VI(A) of this Agreement;
2. require the Grantee to develop and implement a written corrective action plan pursuant to Article VI(D) of this Agreement to remedy the non-compliance;
3. impose special grant conditions to address the non-compliance by giving the Grantee notice of such special conditions in accordance with Article III of this Agreement; the special conditions shall be binding and effective on the date that notice is deemed to have been given pursuant to Article III; or
4. terminate this Agreement pursuant to Article V(A) of this Agreement.

ARTICLE XVIII. SEVERANCE TAX BOND AND GENERAL OBLIGATION BOND PROJECT CLAUSES

A. Grantee acknowledges and agrees that the underlying appropriation for the Project is a severance tax bond or general obligation bond appropriation, and that the associated bond proceeds are administered by the New Mexico State Board of Finance (SBOF), an entity separate and distinct from the Department. Grantee acknowledges and agrees that (i) it is Grantee's sole and absolute responsibility to determine through SBOF staff what (if any) conditions are currently imposed on the Project; (ii) the Department's failure to inform Grantee of a SBOF imposed condition does not affect the validity or enforceability of the condition; (iii) the SBOF may in the future impose further or different conditions upon the Project; (iv) all SBOF conditions are effective without amendment of this Agreement; (v) all applicable SBOF conditions must be satisfied before the SBOF will release to the Department funds subject to the condition(s); and (vi) the Department's obligation to reimburse Grantee from the Project is contingent upon the then current SBOF conditions being satisfied.

B. Grantee acknowledges and agrees that the SBOF may in its sole and absolute discretion remove a project's assigned bond proceeds if the project doesn't proceed sufficiently. Entities must comply with the

DocuSign Envelope ID: 386A9DA1-182E-4831-B175-10ABB5E884BA

requirement to encumber five percent (5%) of Project funds within six months of bond issuance as certified by the grantee in the Bond Questionnaire and Certification documents submitted to the SBOF. Failure to comply may result in the bond proceeds reassignment to a new ready project. If this should occur this grant agreement will be suspended until the entity has demonstrated readiness as determined by the SBOF and the Department.

C. Grantee acknowledges and agrees that this Agreement is subject to the SBOF's Bond Project Disbursements rule, NMAC 2.61.6, as may be amended or re-codified. The rule provides definitions and interpretations of grant language for the purpose of determining whether a particular activity is allowable under the authorizing language of the agreement.

[THIS SPACE LEFT BLANK INTENTIONALLY]

DocuSign Envelope ID: 386A9DA1-182E-4831-B175-10ABB5E884BA

IN WITNESS WHEREOF, the parties have duly executed this Agreement as of the date of execution by the Department.

GRANTEE

_____
Signature of Official with Authority to Bind Grantee

_____
Entity Name

By: _____
(Type or Print Name)

Its: _____
(Type or Print Title)

_____
Date

DEPARTMENT OF TRANSPORTATION

_____
By:

Its: Cabinet Secretary or Designee

_____
Date

REVIEWED AND APPROVED AS TO FORM AND LEGAL SUFFICIENCY BY THE DEPARTMENT'S OFFICE OF GENERAL COUNSEL

DocuSigned by:
Sundeepet kaur
CBDDF719FE734A2...
By: Aaron Frankland or Designee

Its: Deputy General Counsel

04/22/24
Date

IN WITNESS WHEREOF, the parties have executed this Capital Appropriation Project as of the dates set forth below.

CITY OF SANTA FE:

SEE ABOVE

_____

ALAN WEBBER, MAYOR

ATTEST:

_____

GERALYN CARDENAS, INTERIM CITY CLERK

CITY ATTORNEY'S OFFICE:

Marcos Martinez

Marcos Martinez (Jun 14, 2024 09:33 MDT)

SENIOR ASSISTANT CITY ATTORNEY

FINANCE DIRECTOR:

ANDREA PHILLIPS (Jan 8, 2026 13:50:37 MST)

EMILY OSTER

DocuSign Envelope ID: 386A9DA1-182E-4831-B175-10ABB5E884BA

STATE OF NEW MEXICO
CAPITAL GRANT PROJECT
Request for Payment Form
Exhibit 1

I.	**Grantee Information**	**II.**	**Payment Computation**
	(Make sure information is complete & accurate)	A.	Payment Request No.
A.	Grantee:	B.	Grant Amount:
B.	Address:	C.	AIPP Amount *(If Applicable)*:
	(Complete Mailing, including Suite, if applicable)	D.	Funds Requested to Date:
		E.	Amount Requested this Payment:
	City State Zip	F.	Reversion Amount (If *Applicable*):
		G.	Grant Balance:
C.	Phone No:	H.	☐ GF ☐ GOB ☐ STB (*attach wire if first draw*)
D.	Grant No:	I.	☐ Final Request for Payment (*if Applicable*)
E.	Project Title:		
F.	Grant Expiration Date:		

III. **Fiscal Year :** _____

(The State of NM Fiscal Year is July 1, 20XX through June 30, 20XX of the following year)

IV. ☐ **Reporting Certification:** I hereby certify to the best of my knowledge and belief, that database reporting is up to date; to include the accuracy of expenditures and grant balance, project status, project phase, achievements and milestones; and in compliance with Article VIII of the Capital Outlay Grant Agreement.

V. ☐ **Compliance Certification:** Under penalty of law, I hereby certify to the best of my knowledge and belief, the above information is correct; expenditures are properly documented, and are valid expenditures or actual receipts; and that the grant activity is in full compliance with Article IX, Sec. 14 of the New Mexico Constitution known as the "anti donation" clause.

Grantee Fiscal Officer or **Fiscal Agent** (*if applicable*)	**Grantee Representative**
Printed Name	Printed Name
Date:	Date:

(State Agency Use Only)

Vendor Code: _____ **Fund No.:** _____ **Loc No.:** _____

I certify that the State Agency financial and vendor file information agree with the above submitted information.

Division Fiscal Officer	Date	Division Project Manager	Date

DocuSign Envelope ID: 386A9DA1-182E-4831-B175-10ABB5E884BA

NOTICE OF OBLIGATION TO REIMBURSE GRANTEE
EXHIBIT 2

Notice of Obligation to Reimburse Grantee [# 1]

DATE: [_____]

TO: Department Representative: [_____, _____]
FROM: Grantee: [_____]
Grantee Official Representative: [_____]

SUBJECT: Notice of Obligation to Reimburse Grantee
Grant Number: [_____]
Grant Termination Date: [_____]

As the designated representative of the Department for Grant Agreement number [_____] entered into between Grantee and the Department, I certify that the Grantee has submitted to the Department the following third party obligation executed, in writing, by the third party's authorized representative:

Vendor or Contractor: [_____]
Third Party Obligation Amount: [_____]

Vendor or Contractor: [_____]
Third Party Obligation Amount: [_____]

Vendor or Contractor: [_____]
Third Party Obligation Amount: [_____]

I certify that the State is issuing this Notice of Obligation to Reimburse Grantee for permissible purposes within the scope of the project description, subject to all the terms and conditions of the above referenced Grant Agreement.

Grant Amount (Minus AIPP if applicable): [_____]
The Amount of this Notice of Obligation: [_____]
The Total Amount of all Previously Issued Notices of Obligation: [_____]
The Total Amount of all Notices of Obligation to Date: [_____]
Note: Contract amounts may exceed the total grant amount, but the invoices paid by the grant will not exceed the grant amount.

Department Rep. Approver: [_____]
Title: [_____]
Signature: [_____]
Date: [_____]

1 Administrative and/or Indirect Cost – generally, the legislation authorizing the issuance of bonds prohibits the use of its proceeds for indirect expenses (e.g. penalty fees or damages other than pay for work performed, attorney fees, and administrative fees). Such use of bond proceeds shall not be allowed unless specifically authorized by statute.

DocuSign Envelope ID: 386A9DA1-182E-4831-B175-10ABB5E884BA

NMDOT ATTACHEMNT A

The City of Santa Fe shall agree to comply with the following Provisions:

1. Assume the lead role for the Project.
2. Be responsible for all applicable design, environmental and archaeological clearances, and right-of-way acquisition, in accordance with current local, state, federal laws, Uniform Relocation Act, and current design practices and specifications.
3. Be responsible for project development, project construction, construction management, and testing.
4. Utilize the Project Control Number in all correspondence and submittals to the Department.
5. Adopt a written resolution of support for the Project, including as applicable an assumption of ownership, liability, and maintenance responsibility for the scope, or related amenities and required funding to support the Project.
6. Complete the Project using current American Public Works Association (APWA) specifications, implemented Grantee's design standards and specifications, or Department specifications.
7. Use Rental Rate Blue Book rates, if not provided in the Department established equipment rates, in the implementation of this Project. Any equipment rates not found in the Department established rates shall be reimbursed at the Blue Book rates.

The City of Santa Fe shall agree to comply with the following Lighting and Signal Provisions as applicable:

1. After subject signal system(s) has/have been constructed, make provisions for and provide, at its own expense, all electrical energy, routine maintenance such as lamp replacement, emergency shutdown in case of accidental damage or equipment failure and make any repairs necessary due to accidental damage to, or equipment failure of, the signal head and poles.
2. In the event that accidental damage or equipment failure should occur, provide for equipment shut down/or emergency traffic control as needed. In addition, should the accidental damage or equipment failure involve the Controller (and cabinet) or the loop detection system, promptly notify the Traffic Technical Support Bureau of the Department.
3. In the event that the traffic signal should be rendered completely inoperable as a result of accidental damage, secure the intersection with stop signs at all approach legs until such time as the traffic signal is made operable.
4. Make ample future provisions in its budget each year for the cost of maintaining and providing energy to the traffic signals and telephone service to the signal system and intersection lighting.
5. At its own expense, maintain the signal controller and control equipment (the "Controller") including and maintenance of the machine vision vehicle detection system with cameras and emergency vehicle pre-empt system and repair or replace the Controller in the event the Controller and/or cabinet is damaged or there is an equipment failure.
6. After the installation of the roadway lighting system, if any, provide any and all utilities, maintenance, and such other items as may be necessary of continued satisfactory operation of said subject lighting system.
7. Make all timing adjustments to the Signal Control equipment and review the Signal System(s) for efficient and satisfactory operation.
8. Obtain approval from the Department for all signal equipment prior to installation.
9. Require the construction contractor to name the Department and the Grantee as an additional insured in the construction contractor's general liability policy.
10. Enter into a Signalization and Lighting Agreement with the Department's Traffic Technical Support Bureau as required.

DocuSign Envelope ID: 386A9DA1-182E-4831-B175-10ABB5E884BA

1.

City of Santa Fe New Mexico

Finance Department

Project Ledger Request Form

Date of Request: 04/30/2024

Project Title: GOV MILES RD - RICHARDS TO NIZHONI DR

Project Type: ☑ CIP ☑ Grant ☑ Internal Tracking

Project ID: CIP2433003
Grant ID: S2448/S2449
Approved By: MB 5/13/25
MB 5/13/25 (May 13, 2025 11:28 MDT)
Entered By: CMT (Finance Use Only)

Department: PUBLIC WORKS Project Manager: ROMELLA GLORIOSO-MOSS Ext: 505-629-6623

Project Date Range: 05/01/2024 to 06/30/2027 ☑ Create Fixed Asset

---

☑ Multi-Funding (complete all funding sources, should equal 100%)

Funding Source: S2448:NMDOT C5223169 /DFA 22-G3169 % of Funding: 59%

MUNIS ORG: 3309980 MUNIS OBJ: 490150 Awarded Amount: $300,000

Funding Source: S 2449: NM DOT C5233359 / DFA 23-H3359 % of Funding: 41%

MUNIS ORG: 3309980 MUNIS OBJ: 490150 Awarded Amount: $210,000

Expense String Phase:

A project must have at least one phase identified, this can be used as an additional level of tracking, for example, CIP - Design, Construction, etc. For Grants can be used as reimbursable types, such as transportation, salaries.

(You can create more than one phase and you can default MUNIS ORGs and OBJs, optional)

Phase: RIGHT OF WAY MUNIS ORG: 3309980 MUNIS OBJ: 572940

Phase: DESIGN MUNIS ORG: 3309980 MUNIS OBJ: 572960

Phase: CONSTRUCTION MUNIS ORG: 3309980 MUNIS OBJ: 572970

Contract number: _____ Comments/Other: _____

GRANTS ONLY:

Grantor Name: C5223169 EX 6/30/26 AND C5223359 EX 6/30/27 Awarded Amount: 300K/210K

AR Charge Code: 3309980.490150 ☐ Grant funds multiple projects (Complete a form for each project)

Grantor Id: 70000 Federal CFDA (if applicable): N/A

(If grants please provide all grant award documents with form) ☑ Attached Grant Documentation

Log # *{Finance use only}*:	
Journal # *{Finance use only}*:	

City of Santa Fe, New Mexico
BUDGET AMENDMENT RESOLUTION (BAR)

DEPARTMENT / DIVISION NAME	DATE
Public Works / Complete Streets	1/7/2026

ITEM DESCRIPTION	ORG	OBJECT	PROJECT	INCREASE	DECREASE
EXPENDITURES				*{enter as positive #}*	*{enter as negative #}*
WIP Design - Governor Miles Road	3309980	572960	CIP2433003	300,000	
REVENUES				*{enter as negative #}*	*{enter as positive #}*
NMDOT C5223169 - Governor Miles Road	3309980	490150	CIP2433003	(300,000)	
				$ -	$ -

JUSTIFICATION: *(use additional page if needed)*
--Attach supporting documentation/memo

To allocate $300,000 from NMDOT Capital Appropriation Grant C5223169 to WIP Design for Governor Miles Road.

Reversion Date 6/30/26

{Complete section below if BAR results in a net change to ANY Fund}

Fund(s) Affected	Fund Balance Increase/(Decrease)
TOTAL:	0

Carol Swenson, Business Operations Manager — 1/7/2026
Prepared By *{print name}* — Date

N/A
Division Director Signature *{optional}* — Date

JOHN BURNETT (Jan 7, 2026 16:50:50 MST)
Department Director Signature — Date

{Use this form for Finance Committee/ City Council agenda items ONLY}

CITY COUNCIL APPROVAL

City Council Approval Date

Agenda Item #:

Andy Hopkins
Budget Officer — Date

Finance Director *{≤ $5,000}* — Date

City Manager *{≤ $60,000}* — Date

CITY OF SANTA FE

The Purchasing Memo

Date: December 11, 2025

To: Governing Body, Finance Committee, and Public Works & Utilities Committee

From: Nancy Jimenez, Utility Billing and Administration Division Director NLJ

Via: Jesse Roach, Interim Public Utility Department Director JR

Subject: Amendment No. 6

Vendor Name: Paymentus Corporation

Munis Vendor Number: 9633

ITEM AND ISSUE:

Public Utilities Department respectfully requests your review and approval of Amendment #6 to Contract 3203728 with Paymentus Corporation for Merchant Service monthly subscription fee and monthly back charges fees for returned payments and customer disputes Amendment No.6 increases the amount of compensation by $153,000 excluding tax for a total compensation of $377,000 excluding tax and extends the term for 9 months.

CONTRACT NUMBER:

Munis contract number is 3203728

BACKGROUND AND SUMMARY:

The City of Santa Fe is still under the exclusive clause with Wells Fargo's Merchant services. Therefore, this monthly subscription fee must be paid to paymentus for the services they provide to our utility account customers to make their payments through Paymentus online.

PRIOR APPROVALS AND SUPPORTING INFORMATION:

FUNDING SOURCE:

Fund Name/Number: UTILITY/ 511

Munis Org Name/Number: CashierUtl/ 5110354

Munis Object Name/Number: Bank Chrgs/ 561750

Budget Officer / Designee: Andy Hopkins **Date:** 12/19/2025

Budget Officer Comment/Exceptions: _____

PROCUREMENT METHOD:

The procurement method used was NMSA 1978, Section 13-1-111, RFP

#18-0758 #1 Master Service agreement approved 06/27/2018 RFP 21/32/P Munis Contract 3203728 expires on 06/30/2026

Chief Procurement Officer (CPO)/Designee: _____ **Date:** 01/08/2026

CPO Comment/Exceptions: _____

ASSOCIATED APPROVALS:

IT Components included? ☐ **Yes** | ☒ **No**

Approval: _____ **Title:** _____ **Date:** _____

Comment/Exceptions: _____

Treasury/Point of Sale Components included? ☐ **Yes** | ☒ **No**

Approval: _____ **Title:** _____ **Date:** _____

Comment/Exceptions: _____

Vehicles included? ☐ **Yes** | ☒ **No**

Approval: _____ **Title:** _____ **Date:** _____

Comment/Exceptions: _____

Construction to City Facilities, Furniture, and/or Fixtures included? ☐ **Yes** | ☒ **No**

Approval: _____ **Title:** _____ **Date:** _____

Comment/Exceptions: _____

Is this an externally funded purchase? ☐ **Yes** | ☒ **No**

If yes, what is the issuing agency: _____

Approval: _____ **Title:** _____ **Date:** _____

Comment/Exceptions: _____

Is this a Capital Asset or Project? ☐ **Yes** | ☒ **No**

Project Ledger Number: _____

Approval: _____ **Title:** _____ **Date:** _____

Comment/Exceptions: _____

ATTACHMENTS:

Procurement document: GSA Master Agreement
Certificate of Liability Insurance (COI)
Original contract packet

Paymentus 11605 N. Community House Road, Suite 300
Charlotte, NC 28277

AMENDMENT NO. 6 TO MASTER SERVICES AGREEMENT

This Amendment No. 6 ("Amendment") amends the Master Services Agreement effective as March 23, 2017, which was modified by Amending Agreement dated October 31, 2017, Amendment No. 2 dated July 20, 2018, Amendment No. 3 dated December 5, 2022, Amendment No. 4 dated September 10, 2023 and Amendment No. 5 dated June 27, 2024 (collectively the "Agreement") between City of Santa Fe, a New Mexico ("Client") with a principal place of business located at 801 W San Mateo, Santa Fe, NM 87505 and Paymentus Corporation, a State of Delaware Corporation with a principal place of business at 11605 N. Community House Rd, Suite 300, Charlotte, North Carolina 28277 ("Paymentus"). Client and Paymentus are also referred to as "Party" and collectively as the "Parties." This Amendment is effective at the time of the last to sign of the Parties ("Amendment Effective Date").

STATEMENT OF PURPOSE

Client and Paymentus entered into the Agreement for electronic bill payment services; The

Parties agree to amend the Agreement to extend the term to March 23, 2027.

AGREEMENT

In consideration of mutual covenants contained herein, and other good and valuable consideration, the receipt and sufficiency of which are hereby acknowledged, Client and Paymentus agree as follows:

1. Amendment. The Agreement is hereby amended as of the Amendment Effective Date as follows:

   1.1 The Parties agree to extend the term ("Term") of the Agreement to March 23, 2027.

2. Miscellaneous:

   2.1 This Amendment is binding and inures to the benefit of the Parties and their respective successors and assigns.

   2.2 All other terms and conditions of the Agreement not modified by this Amendment remain in full force and effect.

   2.3 This Amendment may be executed in two or more counterparts, each of which shall be deemed to be an original, but all of which shall constitute one and the same instrument.

IN WITNESS WHEREOF, the Parties hereto have caused this Amendment to be executed by their duly authorized representatives.

CITY OF SANTA FE

By: _____

Printed Name: _____

Title: _____

Date: _____

PAYMENTUS CORPORATION

By: Peter Fanous

Printed Name: Peter Fanous

Title: SVP

Date: Dec 16, 2025

CONFIDENTIAL AND PROPRIETARY
Paymentus legal | Revised 6.10.20

ATTEST:

_____

_____, CITY CLERK

CITY ATTORNEY'S OFFICE:

Marcos Martínez
Marcos Martínez (Dec 16, 2025 10:12:42 MST)

MARCOS MARTÍNEZ, SENIOR ASSISTANT CITY ATTORNEY

APPROVED FOR FINANCES:

_____

_____, FINANCE DIRECTOR

CONFIDENTIAL AND PROPRIETARY
Paymentus legal | Revised 6.10.20

Paymentus
11605 North Community House Road, Suite 300
Charlotte, NC 28277
888-440-4826

10/28/2025

Statement of Work

This STATEMENT OF WORK ("SOW"), is entered into as of the date of the last of the signatures set forth below ("Effective Date") by and between City of Santa FE (NM) ("Client") with its principal place of business 801 W San Mateo Santa Fe, NM 87505 and Paymentus Corporation ("Paymentus") with its office at 11605 North Community House Road, Suite 300, Charlotte, North Carolina 28277.

This SOW is hereby entered into and made a part of the Master Services Agreement (the "Agreement") between Client and Paymentus. Terms used but not defined in this SOW will have the meanings given to them in the Agreement.

This SOW shall remain valid for 60 days from issue date.

PROJECT DESCRIPTION

Client is requesting to move CIS to AUS and will be adding Real Time CIF (RT CIF) and Payment Notifications (RT PNS) for TLA SFUP.

Item	Detail	Amount

Adding RT CIF and PNS with AUS	**TLA**: SFUP
	• **Payment type:** Utility Bill
	• Paymentus to establish Real Time CIF connection with AUS
	• Paymentus to configure a Real Time Payment Notification to AUS
	• Paymentus to implement Standard Customer Information File (CIF)
	  ○ AUS to provide standard CIF
	• Paymentus to generate Standard Posting File to facilitate payment posting via SFTP
	• Paymentus to support with ECM Custom Content audience files
	• Paymentus will run an Account Number conversion
	  ○ Current Account Number pattern is 8 digits
	  ○ New Account Number will be 6 digits (ref number in AUS)
	  ○ Client/AUS to provide Paymentus with an excel file that contains all customers current Account Numbers and new Account Numbers
	• Paymentus to facilitate UAT testing
	• Paymentus to provide production planning & deployment to PROD
		$7,750.00

Total Due	Paymentus to waive full implementation cost.	**$0.00**

PAYMENTUS RESPONSIBILITIES

- The project team shall convene regular weekly meetings to ensure progress and alignment. In the event of non-responsiveness exceeding two consecutive weeks from the Client, the project escalation protocol will be initiated internally with Paymentus, along with the designated Point of Contact (POC) as outlined in the SOW. Failure to respond at this juncture may result in the temporary suspension of your project.
- Manage the efforts of the Paymentus staff and coordinate Paymentus activities with the Client's Project Manager.
- Provide Client with one (1) production and one (1) UAT (User Acceptance Testing) environment.
- Coordinate and perform the configuration of the Paymentus solution as described above.
- Define the project schedule in consultation with the Client's Project Manager and resolve deviations from the Project Schedule, if any.
- Provide timely responses to critical issues raised by the Client's Project Manager
- Provide access to the Paymentus Developer Portal and recommendation for optimal solution ex standard Paymentus CIF file

CLIENT RESPONSIBILITIES

- Assign resources that have the time and expertise to execute their respective tasks and responsibilities.
- Provide timely and appropriate responses to Paymentus' request for information.
- Coordinate support for any other third-party vendor where Client holds the primary relationship.
- Ensure network connectivity.
- Testing of the solution and reporting of any deviation.
- The client is responsible for conducting thorough User Acceptance Testing (UAT), encompassing comprehensive testing of all available payment methods and in all forms, prior to the configuration being migrated to the production environment.
- Additionally, the UAT checklist must be completed and signed by the client as a confirmation of their testing activities. This testing requirement is distinct and separate from any testing conducted by their CIS or any other vendor
- The client is required to sign off on UAT testing by performing and validating test payments and completing the Paymentus UAT Checklist. Once the UAT checklist is provided to the Client by Paymentus, the Client will have 3 weeks to complete the testing and checklist and notify Paymentus of any issues. Within 3 days of notification by Paymentus that the system is available for retesting the Client will have 3 days to retest. Upon completion of retesting and Client has not reported any issues, Client has 5 days to sign off on UAT. If sign-off is not received within this timeframe, we reserve the right to place the project on hold.

ASSUMPTIONS

- Client and/or Development Partner/Vendor understands that any delay in response can/will impact project timelines.
- Client will schedule meetings with the Development Partner/Vendor and Client will stay engaged through project warranty.
- Non-standard changes (i.e. custom development) must follow Paymentus release calendar.

OUT OF SCOPE

- Features not explicitly defined in the Project Description are out of scope.

POST DEPLOYMENT ASSUMPTIONS

- After the production launch the client will transition into the Hypercare stage for the project, which consists of 10 business days of support post deployment (Production). Any risks or issues that are identified during this period may be eligible for an extension of Hypercare which is subject to approval.
- Any Client concerns or changes post the Hypercare stage will be directed to the Paymentus Customer Care team at customercare@paymentus.com or 800-420-1663.

ESCALATION APPROACH

Paymentus

Escalation Level 1	Escalation Level 2	Escalation Level 3
TBD upon project kickoff	**Pantelis Mamouzellos**	**Lori Hogg**
Project Manager	Director, Client Services	Vice President, Customer Success
Email: TBD	Email: pmamouzellos@paymentus.com	Email: lhogg@paymentus.com
Phone: TBD	Phone: 980-206-9091	Phone: 980-206-9091

Client

Escalation Level 1	Escalation Level 2
Nancy Jimenez	**Carla Monroe**
Utilities Director	Program Manager
Email: nljimenez@santafenm.gov	Email: cdmonroe@santafenm.gov
Phone: (505) 955-4364	Phone: (505) 504-8240

Client Testers

Tester 1	Tester 2
Nancy Jimenez	**Caleb Monroe**
Utilities Director	Testing Manager
Email: nljimenez@santafenm.gov	Email: cnmonroe@santafenm.gov
Phone: (505) 955-4364	Phone: (404) 590-1445

Paymentus
11605 North Community House Road, Suite 300
Charlotte, NC 28277
888-440-4826

Authorized Client Representative	Paymentus Corporation
Signature:	Signature: Peter Fanous
Printed Name:	Printed Name: **Peter Fanous**
Title:	Title: **Senior VP, Mid Markets**
Date:	Date: Dec 16, 2025

ATTEST:

_____

_____, CITY CLERK

CITY ATTORNEY'S OFFICE:

Marcos Martínez
Marcos Martínez (Dec 16, 2025 10:12:42 MST)

MARCOS MARTÍNEZ, SENIOR ASSISTANT CITY ATTORNEY

APPROVED FOR FINANCES:

BRIAN MOYA Chief Brian Moya, Interim City Manager

signing on behalf of

_____, FINANCE DIRECTOR

Client#: 1057753 PAYMEHOL

ACORD™ CERTIFICATE OF LIABILITY INSURANCE

DATE (MM/DD/YYYY) 8/06/2025

THIS CERTIFICATE IS ISSUED AS A MATTER OF INFORMATION ONLY AND CONFERS NO RIGHTS UPON THE CERTIFICATE HOLDER. THIS CERTIFICATE DOES NOT AFFIRMATIVELY OR NEGATIVELY AMEND, EXTEND OR ALTER THE COVERAGE AFFORDED BY THE POLICIES BELOW. THIS CERTIFICATE OF INSURANCE DOES NOT CONSTITUTE A CONTRACT BETWEEN THE ISSUING INSURER(S), AUTHORIZED REPRESENTATIVE OR PRODUCER, AND THE CERTIFICATE HOLDER.

IMPORTANT: If the certificate holder is an ADDITIONAL INSURED, the policy(ies) must have ADDITIONAL INSURED provisions or be endorsed. If SUBROGATION IS WAIVED, subject to the terms and conditions of the policy, certain policies may require an endorsement. A statement on this certificate does not confer any rights to the certificate holder in lieu of such endorsement(s).

PRODUCER	CONTACT NAME: Sherry Smith
USI Insurance Services, LLC 2502 N Rocky Point Drive Suite 400 Tampa, FL 33607	PHONE (A/C, No, Ext): 813 321-7500 FAX (A/C, No): 813 321-7525 E-MAIL ADDRESS: sherry.smith@usi.com

INSURED	INSURER(S) AFFORDING COVERAGE	NAIC #
Paymentus Corporation 11605 North Community House Rd Ste 300 Charlotte, NC 28277	INSURER A : LM Insurance Corporation	33600
	INSURER B : Liberty Insurance Corporation	42404
	INSURER C : Federal Insurance Company	20281
	INSURER D : Great American Insurance Company	
	INSURER E :	
	INSURER F :	

COVERAGES **CERTIFICATE NUMBER:** **REVISION NUMBER:**

THIS IS TO CERTIFY THAT THE POLICIES OF INSURANCE LISTED BELOW HAVE BEEN ISSUED TO THE INSURED NAMED ABOVE FOR THE POLICY PERIOD INDICATED. NOTWITHSTANDING ANY REQUIREMENT, TERM OR CONDITION OF ANY CONTRACT OR OTHER DOCUMENT WITH RESPECT TO WHICH THIS CERTIFICATE MAY BE ISSUED OR MAY PERTAIN, THE INSURANCE AFFORDED BY THE POLICIES DESCRIBED HEREIN IS SUBJECT TO ALL THE TERMS, EXCLUSIONS AND CONDITIONS OF SUCH POLICIES. LIMITS SHOWN MAY HAVE BEEN REDUCED BY PAID CLAIMS.

INSR LTR	TYPE OF INSURANCE	ADDL INSR	SUBR WVD	POLICY NUMBER	POLICY EFF (MM/DD/YYYY)	POLICY EXP (MM/DD/YYYY)	LIMITS	
A	X COMMERCIAL GENERAL LIABILITY CLAIMS-MADE [X] OCCUR GEN'L AGGREGATE LIMIT APPLIES PER: POLICY [ ] PRO-JECT [ ] LOC OTHER:			B5Z11C4169N025	08/09/2025	08/09/2026	EACH OCCURRENCE DAMAGE TO RENTED PREMISES (Ea occurrence) MED EXP (Any one person) PERSONAL & ADV INJURY GENERAL AGGREGATE PRODUCTS - COMP/OP AGG $	$1,000,000 $1,000,000 $15,000 $1,000,000 $2,000,000 $2,000,000 $
A	AUTOMOBILE LIABILITY X ANY AUTO OWNED AUTOS ONLY [ ] SCHEDULED AUTOS X HIRED AUTOS ONLY [X] NON-OWNED AUTOS ONLY			S5Z11C4169N015	08/09/2025	08/09/2026	COMBINED SINGLE LIMIT (Ea accident) BODILY INJURY (Per person) BODILY INJURY (Per accident) PROPERTY DAMAGE (Per accident) $	$1,000,000 $ $ $ $
B	X UMBRELLA LIAB [X] OCCUR EXCESS LIAB [ ] CLAIMS-MADE DED RETENTION $			TH7Z11C4169N055	08/09/2025	08/09/2026	EACH OCCURRENCE AGGREGATE $	$25,000,000 $25,000,000 $
A	WORKERS COMPENSATION AND EMPLOYERS' LIABILITY ANY PROPRIETOR/PARTNER/EXECUTIVE OFFICER/MEMBER EXCLUDED? Y/N [N] N/A (Mandatory in NH) If yes, describe under DESCRIPTION OF OPERATIONS below			WC2Z11C4169N035	08/09/2025	08/09/2026	X PER STATUTE [ ] OTH-ER E.L. EACH ACCIDENT E.L. DISEASE - EA EMPLOYEE E.L. DISEASE - POLICY LIMIT	 $1,000,000 $1,000,000 $1,000,000
C	Crime			J06028525	08/09/2025	08/09/2026	10,000,000	
D	Excess Crime			23646737	08/09/2025	08/09/2026	20,000,000	

DESCRIPTION OF OPERATIONS / LOCATIONS / VEHICLES (ACORD 101, Additional Remarks Schedule, may be attached if more space is required)

** Workers Comp Information **

A WC2Z11C4170N035 Eff Date: 08/09/2025 Exp Date: 08/09/2026 (States MN & NY)
WC Each Accident Limit: $1,000,000
(See Attached Descriptions)

CERTIFICATE HOLDER

City of Santa Fe (NM)
200 Lincoln Ave.
Santa Fe, NM 87504

CANCELLATION

SHOULD ANY OF THE ABOVE DESCRIBED POLICIES BE CANCELLED BEFORE THE EXPIRATION DATE THEREOF, NOTICE WILL BE DELIVERED IN ACCORDANCE WITH THE POLICY PROVISIONS.

AUTHORIZED REPRESENTATIVE

© 1988-2015 ACORD CORPORATION. All rights reserved.

The ACORD name and logo are registered marks of ACORD

VAPZP

DESCRIPTIONS (Continued from Page 1)

WC Policy Limit: $1,000,000
WC Each Employee Limit: $1,000,000

Primary Crime Coverage:
Carrier: Federal Insurance Company
Policy # J06028525
Effective: 08/09/2025 to 08/09/2026

Client Theft: $10,000,000
On Premises: $10,000,000
In Transit: $10,000,000
Computer System Fraud: $10,000,000
Social Engineering Fraud Coverage $250K
Retention: $100K

Excess Crime Coverage
Carrier: Great American Insurance Company
Policy #23646737
Effective: 08/09/2025 to 08/09/2026

$20,000,000 XS if $10,000,000

Sub-Limit Social Engineering Fraud: $250,000 XS of $250K with $100K Retention

CERTIFICATE OF LIABILITY INSURANCE

DATE (MM/DD/YYYY): 8/5/2025

THIS CERTIFICATE IS ISSUED AS A MATTER OF INFORMATION ONLY AND CONFERS NO RIGHTS UPON THE CERTIFICATE HOLDER. THIS CERTIFICATE DOES NOT AFFIRMATIVELY OR NEGATIVELY AMEND, EXTEND OR ALTER THE COVERAGE AFFORDED BY THE POLICIES BELOW. THIS CERTIFICATE OF INSURANCE DOES NOT CONSTITUTE A CONTRACT BETWEEN THE ISSUING INSURER(S), AUTHORIZED REPRESENTATIVE OR PRODUCER, AND THE CERTIFICATE HOLDER.

IMPORTANT: If the certificate holder is an ADDITIONAL INSURED, the policy(ies) must have ADDITIONAL INSURED provisions or be endorsed. If SUBROGATION IS WAIVED, subject to the terms and conditions of the policy, certain policies may require an endorsement. A statement on this certificate does not confer rights to the certificate holder in lieu of such endorsement(s).

PRODUCER
Marsh & McLennan Agency LLC
250 Pehle Avenue, Suite 400
Saddle Brook NJ 07663

CONTACT NAME: Martha Szmejda
PHONE (A/C, No, Ext): 201-845-6600 **FAX (A/C, No):**
E-MAIL ADDRESS: Martha.Szmejda@MarshMMA.com

INSURER(S) AFFORDING COVERAGE	NAIC #
INSURER A : AIG Specialty Insurance Company	26883
INSURER B :	
INSURER C :	
INSURER D :	
INSURER E :	
INSURER F :	

INSURED
Paymentus Holdings, Inc
11605 North Community House Rd Ste 300
Charlotte NC 28277
PAYMENTUS

COVERAGES **CERTIFICATE NUMBER:** 1698193474 **REVISION NUMBER:**

THIS IS TO CERTIFY THAT THE POLICIES OF INSURANCE LISTED BELOW HAVE BEEN ISSUED TO THE INSURED NAMED ABOVE FOR THE POLICY PERIOD INDICATED. NOTWITHSTANDING ANY REQUIREMENT, TERM OR CONDITION OF ANY CONTRACT OR OTHER DOCUMENT WITH RESPECT TO WHICH THIS CERTIFICATE MAY BE ISSUED OR MAY PERTAIN, THE INSURANCE AFFORDED BY THE POLICIES DESCRIBED HEREIN IS SUBJECT TO ALL THE TERMS, EXCLUSIONS AND CONDITIONS OF SUCH POLICIES. LIMITS SHOWN MAY HAVE BEEN REDUCED BY PAID CLAIMS.

INSR LTR	TYPE OF INSURANCE	ADDL INSD	SUBR WVD	POLICY NUMBER	POLICY EFF (MM/DD/YYYY)	POLICY EXP (MM/DD/YYYY)	LIMITS	
	COMMERCIAL GENERAL LIABILITY						EACH OCCURRENCE	$
	☐ CLAIMS-MADE ☐ OCCUR						DAMAGE TO RENTED PREMISES (Ea occurrence)	$
							MED EXP (Any one person)	$
							PERSONAL & ADV INJURY	$
	GEN'L AGGREGATE LIMIT APPLIES PER:						GENERAL AGGREGATE	$
	☐ POLICY ☐ PRO-JECT ☐ LOC						PRODUCTS - COMP/OP AGG	$
	OTHER:							$
	AUTOMOBILE LIABILITY						COMBINED SINGLE LIMIT (Ea accident)	$
	☐ ANY AUTO						BODILY INJURY (Per person)	$
	☐ OWNED AUTOS ONLY ☐ SCHEDULED AUTOS						BODILY INJURY (Per accident)	$
	☐ HIRED AUTOS ONLY ☐ NON-OWNED AUTOS ONLY						PROPERTY DAMAGE (Per accident)	$
								$
	☐ UMBRELLA LIAB ☐ OCCUR						EACH OCCURRENCE	$
	☐ EXCESS LIAB ☐ CLAIMS-MADE						AGGREGATE	$
	☐ DED ☐ RETENTION $							$
	WORKERS COMPENSATION AND EMPLOYERS' LIABILITY Y/N						☐ PER STATUTE ☐ OTH-ER	
	ANYPROPRIETOR/PARTNER/EXECUTIVE OFFICER/MEMBEREXCLUDED? ☐ (Mandatory in NH)	N/A					E.L. EACH ACCIDENT	$
	If yes, describe under DESCRIPTION OF OPERATIONS below						E.L. DISEASE - EA EMPLOYEE	$
							E.L. DISEASE - POLICY LIMIT	$
A	Tech Professional (E&O) and Cyber			025816367	8/9/2025	8/9/2026	$10,000,000 $10,000,000	Per Occ Annual Agg.

DESCRIPTION OF OPERATIONS / LOCATIONS / VEHICLES (ACORD 101, Additional Remarks Schedule, may be attached if more space is required)

Insurer B:
Excess
Carrier: Columbia Casualty Company
NAIC: 31127
Policy Number: 652024674
Policy Dates: 8-9-2025 - 8-9-2026
Policy Limits: $10,000,000 XS $10,000,000

Evidence of Insurance

CERTIFICATE HOLDER

City of Santa Fe (NM)
200 Lincoln Ave
Santa Fe NM 87504

CANCELLATION

SHOULD ANY OF THE ABOVE DESCRIBED POLICIES BE CANCELLED BEFORE THE EXPIRATION DATE THEREOF, NOTICE WILL BE DELIVERED IN ACCORDANCE WITH THE POLICY PROVISIONS.

AUTHORIZED REPRESENTATIVE

© 1988-2015 ACORD CORPORATION. All rights reserved.

The ACORD name and logo are registered marks of ACORD

City of Santa Fe New Mexico

Memo

Date: **March 25, 2024**

To: **Governing Body**
Finance Committee
Public Utility/Public Works Committee

Via: **John Dupuis, Public Utility Department Director** JD

From: **Nancy Jimenez, Utility Billing Division Director**

Item and Issue:
Request for approval of Amendment #5 in the amount of $105,000.00 for Merchant Service monthly subscription fee through June 2026; Paymentus; (Nancy Jimenez, nljimenez@santafenm.gov, 505-955-4364)

Background/Summary:
The Utility Billing is respectfully asking to amend the Paymentus contract to modify the monthly charges back to the monthly service charge of $7,000 for the utility account payment's monthly subscription fee.

The City of Santa Fe is still under the exclusivity clause with Wells Fargo's Merchant services. Therefore, this monthly subscription fee must be paid to Paymentus for the services they provide to our utility account customers to make their utility payments through Paymentus online.

Contract number:
Munis contract number is 3203728.

Funding Source:

Fund Name/Number: Utility/511
Munis Org Name/Number: Cashier Utility/5110354
Munis Object Name/Number: Bank Charges/561750

Requested Action:
Public Utilities Respectfully requests your review and approval.

City of Santa Fe

Summary of Contract, Agreement, Amendment & Lease

All applicable fields to be completed by department (complete 1.b only if you are processing an amendment):

1.a Munis Contract: 3203728 Procurement # (RFP/ITB# If any): RFP 21/32/P

Contractor: Paymentus

Procurement Method/Vehicle: Small Purchase [ ] RFP [X] ITB [ ] Sole Source [ ] GSA [ ] Cooperative [ ] Exempt [ ] SWPA/Existing [ ]

Description/Title: Master Service Agreement/Electronic Bill Payment

Contract: [O] Agreement: [O] Lease/Rent: [O] Amendment: [X]

Term Start Date: 3/3/17 Term End Date: 6/30/25 Total Contract Amount: _____

[ ] Approved by Council *(If over the City Manager's approval threshold you must go through GB)* _____

Contract / Lease:

1.b Amendment #: 5 to the Original Contract/Lease # 3203728

Increase/(Decrease) Amount $: $105,000

Extend Expiration Date to: _____

[X] Approved by Council *(If the original went through GB, all amendments must go through GB regardless of the amendment reason)* Date: Pending

Amendment is for:

---

2. **HISTORY** of Contract, Amendments & Lease / Rent - Please Elaborate (option: attach spreadsheet if multiple amendments)

#18-0758 #1 Master Service Agreement Comp & term appvd 6/27/18
2. Schedule A. Amendment Signed by Finance Director 10/27/17
3. decrease monthly charge amount for FY24 & FY25 extend term.
4. Paymentus agreed to waive $19k with amend. approved by CM 9/10/23

3. **Procurement History:** _____

JoAnn Lovato Montaño — May 22, 2024
Purchasing Officer Review: — Date:

Comment & Exceptions: Increasing Comp

4. **Funding Source:** Utilities/511 **Org / Object:** 511D354/501750

Andy Hopkins — May 22, 2024
Budget Officer Approval: — Date:

Comment & Exceptions:

5. **Grant History (if applicable):** _____

Grants Administrator Approval: _____ Date _____

Staff Contact who Completed This Form: Jessica Chavez L. MacAllister Phone #: 505-819-8411

To be recorded by City Clerk:
Clerk # _____
Date of Execution: _____

Email: JChavez@SantaFenm.gov. lmmacallister@santafenm.gov

ITT Representative (attesting that all information is reviewed) Title Date

CITY OF SANTA FE PROCUREMENT CHECKLIST

Contractor Name: Paymentus

Procurement/contract Title: Master Service Agreement

Procurement Method/Vehicle: ☐Sole Source ☐State Price Agreement/Existing ☐ Cooperative ☒Request For Proposals(RFP) ☐Invitation To Bid (ITB) ☐Exempt: 13-1-98

☐Small Purchase (Contract Under $60,000) ☐Other: _____

Requesting Department: Utilities Billing Staff Name: Nancy Jiminez

Procurement Requirements:

Procurement files shall be maintained for all purchases and contracts, regardless of the method of procurement. The procurement files shall contain the basis on which the awards are made, all submitted bids/proposals, all evaluation materials (bid tabs or Evaluation Committee Reports), scoresheets, quotations, and all other documentation related to or prepared in conjunction with evaluations, negotiations, and the award processes. The procurements shall contain written determinations from the Requesting Departments, signed by the Chief Procurement Officers (this document), setting forth the reasoning for the contract award decisions before submitting them to the Committees.

REQUIRED DOCUMENTS FOR APPROVAL BY PURCHASING (CPD)

YES	N/A	
☐	☒	**Written Determination (srvs)**
☐	☒	**RFP - Confidential info to be provided to GB by CPD Buyer**
☐	☒	**ITB (include bid tab)**
☐	☒	**Other:** _____
☐	☒	**Cooperative Agreements and GSAs and Statewide Price Agreements (include the cover page to show valid dat page, and items to be purchased)**
☐	☒	**Horizon Declination or Screenshot of horizonsofnewmexico.org/services.html (srvs)**
☒	☐	**Summary of Contract (only on contracts)**
☐	☒	**Current Santa Fe Business Registration (or Exemption if no tax)**
☐	☒	**Executed Contract or Price Agreement (legal and contractor must sign before purchasing approves)**
☐	☒	**Chief Procurement Officer (or designee) Approval for Exempt from Procurement (use memo on our site)**
☐	☒	**Evaluation Committee Report (RFPs only)**
☐	☒	**Signed Sole Source Determination, Vendor Written Quote, SS Letter from Contractors, and 30 Days Email**
☒	☐	**>20k = Memo addressed to City Manager (Under 150K) Committees/City Council (Over 150K)**

YES	N/A	
☐	☒	**Quote(s) (3 Valid & Current for Over 20k)**
☐	☒	**BAR**
☐	☒	**FIR**
☒	☐	**Certificate of Insurance (srvs)**

Nancy Jiminez — Department Point of Contact — Utility Billing Director — Title — 3/28/24 — Date

John DeJulis (Apr 5, 2024 16:49 MDT) — Department Director — Date

JoAnn Lovato Montaño — Chief Procurement Officer — May 22, 2024 — Date

ITT Representative — Title — Date

CoSF

Version 3 12.1.2023

Paymentus 11605 North Community House Road, Suite 300
Charlotte, NC 28277

Munis #3203728

AMENDMENT NO. 5
TO MASTER SERVICES AGREEMENT EFFECTIVE 3/23/2017.

This Amendment No. 5 ("Amendment ") amends the Master Services Agreement (the "MSA") effective as of March 23, 2017, which was modified by Amendment Agreement on October 31, 2017, Amendment No. 2 on July 20, 2018 , Amendment No. 3 on December 5, 2022, and Amendment No. 4 on Sept 10, 2023 (collectively the "Agreement") between City of Santa Fe ("Client") with a principal place of business located at 801 W San Mateo Santa Fe, NM 87505, and Paymentus Corporation, a State of Delaware Corporation with a principal place of business 11605 North Community House Road, Suite 300, Charlotte, NC 28277 ("Paymentus"). Client and Paymentus are also referred to as "Party" and collectively as the "Parties." This Amendment is effective at the time of the last to sign of the Parties.

STATEMENT OF PURPOSE

Client and Paymentus entered into the Agreement for electronic bill payment services.

The Parties agree to modify the Paymentus Fee Schedule to reinstate the Absorbed Fee model as a technology gateway with monthly subscription fee.

AGREEMENT

In consideration of mutual covenants contained herein, and other good and valuable consideration, the receipt and sufficiency of which are hereby acknowledged, Client and Paymentus agree as follows:

1. Amendment. The Agreement is hereby amended as of the Effective Date of this Amendment as follows:

   1.1 Schedule A - Paymentus Service Fee Schedule ("Schedule A") of the Agreement is hereby deleted and the new Schedule A following is substituted in lieu thereof.

2 Miscellaneous:

   2.1 This Amendment is binding and inures to the benefit of the Parties and their respective successors and assigns.

   2.2 All other terms and conditions of the Agreement not modified by this Amendment remain in full force and effect.

   2.3 This Amendment may be executed in two or more counterparts, each of which shall be deemed to be an original, but all of which shall constitute one and the same instrument.

IN WITNESS WHEREOF, the Parties hereto have caused this Amendment to be executed by their duly authorized representatives.

CITY OF SANTA FE	PAYMENTUS CORPORATION
By: SEE CITY OF SANTA FE SIGNATURE PAGE	By: _____
Printed Name: _____	Printed Name: _____
Title: _____	Title: _____
Date: _____	Date: _____

CONFIDENTIAL AND PROPRIETARY
Paymentus legal | Revised 6.10.20

Paymentus 11605 North Community House Road, Suite 300
Charlotte, NC 28277

Schedule A – Paymentus Service Fee Schedule

The Paymentus Fee will be as specified below, and will be paid by the Client, unless designated as a User paid fee.

Absorbed Fee Model – Technology Gateway
Residential Utility Payments • Average Bill Amount: $100 • Monthly Subscription Fee: $7,000 Paymentus Service Fee per Transaction: • Credit/Debit Card: $0 (Visa, MasterCard, Discover Discount Utility Rate Program) • ACH/eCheck: $0

The merchant agreement with Paymentus and Chase will be utilized for eCheck transactions only, as First Data/Wells Fargo will be providing credit/debit card merchant services. The monthly subscription fee is for the use of Paymentus platform technology.

Monthly subscription fee includes unlimited ACH/eCheck transactions.

Note:

- Maximum Amount per Payment is $10,000.00 with a minimum of $5.00. Multiple payments may be made.
- Paymentus may apply different limits per transactions for user adoption or to mitigate risks
- Pricing is subject to change per entity as needed and will be written in the amendments.
- Chargebacks and returned checks will be billed at $9.95 per item.

IN WITNESS WHEREOF, the City of Santa Fe has agreed to this Amendment 5 as of the date of the signature by the required approval authorities below.

CITY OF SANTA FE:

Alan Webber (Jun 27, 2024 12:16 MDT)

ALAN WEBBER, MAYOR

DATE: Jun 27, 2024

ATTEST:

GERALYN CARDENAS, XIV
INTERIM CITY CLERK

GB MTG 06/26/2024

CITY ATTORNEY'S OFFICE:

Marcos Martinez
Marcos Martinez (Mar 13, 2024 09:29 MDT)

SENIOR ASSISTANT CITY ATTORNEY

APPROVED FOR FINANCES:

Emily K. Oster

EMILY OSTER, FINANCE DIRECTOR

CONTRACTOR:

Peter Fanous

PETER FANOUS SR, VP OF MID MARKETS

DATE: Mar 25, 2024

11605 North Community House Road, Suite 300
Charlotte, NC 28277
888-440-4626

07/07/2023

Amendment No. 4

TO MASTER SERVICES AGREEMENT EFFECTIVE 3/23/2017.

Statement of Work

This STATEMENT OF WORK ("SOW"), is entered into as of the date of the last of the signatures set forth below ("Effective Date") by and between City of Santa Fe ("Client") with its principal place of business 801 W San Mateo Santa Fe, NM 87505 Paymentus Corporation and Paymentus Corporation ("Paymentus") with its office at 11605 North Community House Road, Suite 300, Charlotte, North Carolina 28277.

This SOW is hereby entered into and made a part of the Master Services Agreement (the "Agreement") between Client and Paymentus. Terms used but not defined in this SOW will have the meanings given to them in the Agreement.

This SOW shall remain valid for 60 days from issue date.

PROJECT DESCRIPTION

Paymentus will configure and implement an integration with SilverBlaze/Advanced Utility Systems for City of Santa Fe.

Item	Detail	Amount
SilverBlaze/ Advanced Utility Systems Integration	Paymentus standard SilverBlaze/Advanced Utility Systems integration: Paymentus will integrate with SilverBlaze and Advanced Utility Systems via Paymentus API to allow customers to make and manage their payment options via the SilverBlaze portal. The following payment options will be available: 1. Enrolled one-time payments via Web UI 2. Guest one-time payments via Web UI 3. Recurring payments via Web UI 4. Wallet management 5. One-time payments via Phone Paymentus will configure the following: 1. TLA: SFUP 2. MID: A new Merchant ID will be created and utilized. 3. Payment Type: Utility	$19,000

CONFIDENTIAL AND PROPRIETARY
Paymentus legal | Revised 6.25.22

11605 North Community House Road, Suite 300
Charlotte, NC 28277
888-440-4826

	4. Payment Methods: a. Credit: Visa, Mastercard, Discover, Amex b. Debit: Visa, Mastercard c. eCheck 5. Customer Portal: To be enabled. 6. IVR: To be enabled in English *Custom voice prompts will be required. 7. Autopay: To be enabled. Autopay schedules do not currently exist in Paymentus and will be imported via a schedule loader from Advanced Utility Systems 8. Real-time customer lookup will be configured - confirm this functionality works with Advanced Utility Systems or if we will need a customer information file 9. Payment Notification Service (PNS): The post back URL will be provisioned and payments will be posted back to 10. SFTP will be set up for the daily posting file to be made available to Client. Paymentus will coordinate with client on the configuration. The daily posting file will also be available through the Agent Dashboard portal.	
Total Due	Paymentus to waive $19,000 cost	$0.00

Paymentus has agreed to waive the total cost of $19,000 associated with this request.

PAYMENTUS RESPONSIBILITIES

- Manage the efforts of the Paymentus staff and coordinate Paymentus activities with the Customer's Project Manager.
- Provide Customer with one (1) production and one (1) UAT (User Acceptance Testing) environment.
- Coordinate and perform the configuration of the Paymentus solution as described above.
- Define the project schedule in consultation with the Customer's Project Manager and resolve deviations from the Project Schedule, if any.
- Provide timely responses to critical issues raised by the Customer's Project Manager

CONFIDENTIAL AND PROPRIETARY
Paymentus Legal | Revised 6.29.22

- Provide integration guide and recommendation for optimal solution ex standard Paymentus CIF file
- <<<Above are examples>>>

CUSTOMER RESPONSIBILITIES

- Assign resources that have the time and expertise to execute their respective tasks and responsibilities.
- Provide timely and appropriate responses to Paymentus' request for information.
- Coordinate support for any other third-party vendor where Customer holds the primary relationship.
- Ensure network connectivity.
- Testing of the solution and reporting of any deviation.
- Signoff on UAT and GO Live confirming completion of all testing activities.
- <<<Above are examples>>>

ASSUMPTIONS

Customer and/or Development Partner/Vendor understands that any delay in response can/will impact project timelines.

Customer will schedule meetings with the Development Partner/Vendor and Customer will stay engaged through project warranty.

Non-standard changes (i.e. custom development) must follow Paymentus release calendar.

CONFIDENTIAL AND PROPRIETARY
Paymentus Legal | Revised 6.29.22

11605 North Community House Road, Suite 300
Charlotte, NC 28277
888-440-4826

ESCALATION APPROACH

Paymentus

Escalation Level 1	Escalation Level 2	Escalation Level 3
TBD upon project kickoff Project Manager Email: TBD Phone: TBD	Pamelia Mamoucelios Director, Client Services Email: pmamoucelios@paymentus.com Phone: 980-205-9091	Lori Hoge Vice President, Customer Success Email: lhoge@paymentus.com Phone: 980-206-9091

City of Santa Fe

Escalation Level 1	Escalation Level 2
Nancy Jimenez Utility Billing Division Director Email: [illegible] Phone: 505 955-6364	Stephen Morales Senior Financial Analyst Email: [illegible] Phone: 505 955 -4209

Out of Scope:

- Features not explicitly defined in the Project Description are out of scope.

Post Deployment Assumptions:

- Any customer concerns or changes post deployment (Production) will be directed to the Paymentus Customer Care team at customercare@paymentus.com or 800-240-1663.

Authorized Customer Representative	PAYMENTUS CORPORATION
Signature:	Signature: Peter Fanous
Printed Name:	Printed Name: Peter Fanous
Title:	Title: Senior VP, Mid Markets
Date:	Date: 8/15/2023

CONFIDENTIAL AND PROPRIETARY
Paymentus Legal | Revised 6.29.22

CITY OF SANTA FE:

John Blair
John Blair (Sep 10, 2023 18:47 MDT)

JOHN BLAIR, CITY MANAGER

DATE: Sep 10, 2023

ATTEST:

KRISTINE BUSTOS MIHELCIC,
CITY CLERK

CITY ATTORNEY'S OFFICE:

Marcos Martinez

SENIOR ASSISTANT CITY ATTORNEY

APPROVED FOR FINANCES:

Emily K. Oster
Emily K. Oster (Sep 7, 2023 17:03 MDT)

EMILY OSTER, FINANCE DIRECTOR

CONTRACTOR:

Paymentus, Corporation

Peter Fanous

NAME

DATE: 8/15/2023

ITEM #22-0566

Munis # 3203728

Paymentus

11605 North Community House Road, Suite 300
Charlotte, NC 28277
888-440-4826

AMENDMENT NO. 3

TO MASTER SERVICES AGREEMENT EFFECTIVE 3/23/2017.

This Amendment No. 3 ("Amendment 3") amends the Master Services Agreement effective as of March 23, 2017, which was modified by Amendment effective date October 31, 2017, and Amendment No. 2 effective date July 20, 2018 (collectively the "Agreement") between City of Santa Fe ("Client") with a principal place of business located at 801 W San Mateo Santa Fe, NM 87505, and Paymentus Corporation, a State of Delaware Corporation with a principal place of business 11605 North Community House Road, Suite 300, Charlotte, NC 28277 ("Paymentus"). Client and Paymentus are also referred to as "Party" and collectively as the "Parties." This Amendment No. 3 is effective at the time both Parties have signed Amendment No. 3.

STATEMENT OF PURPOSE

Client and Paymentus entered into the Agreement for electronic bill payment services.

The Parties desire to amend the Agreement in the following ways

- Renew the contract term period
- Update Schedule A of Agreement to include additional Paymentus Services to Client subsidiaries and modify Paymentus Fees
- Include integration with Advanced Utility Services and Silverblaze

AGREEMENT

In consideration of mutual covenants contained herein, and other good and valuable consideration, the receipt and sufficiency of which are hereby acknowledged, Client and Paymentus agree as follows:

1. Amendment. The Agreement is hereby amended as of the Effective Date of this Amendment No. 3 as follows:

1.1 Schedule A (Paymentus Service Fee Schedule) of the Agreement is hereby deleted and the new Schedule A following is substituted in lieu thereof.

1.2 The parties desire to establish a direct payment processing relationship between the parties. The following language is hereby deleted from Schedule A:

a) "The merchant agreement with Paymentus and Chase will be utilized for e-check transactions only, as First Data/Wells Fargo will be providing credit/debit card merchant services. The monthly subscription fee is for the use of the Paymentus platform technology. At any time, the City may choose to revert back to the original pricing per transaction using Chase merchant services."

1.3 The parties desire to amend Schedule A of the Agreement to remove the Monthly Subscription fee of $7,000.00 in accordance with section 1.2 above

1.4 The parties desire to amend Schedule A of the Agreement to include digital wallet payment options including PayPal, PayPal Credit, Venmo, Amazon, Alexa, and Walmart Pay

1.5 The Parties desire to amend the Agreement to replace section 5 of the Master Services Agreement to extend the contract term through June 30, 2025. Agreement shall be renewable for additional successive twelve (12) month auto-renewal term periods. In no event, shall the term exceed the time allowed by NMSA13-1-150.

CONFIDENTIAL AND PROPRIETARY
Paymentus legal | Revised 6.10.20

Paymentus
11605 North Community House Road, Suite 300
Charlotte, NC 28277
888-440-4826

1.6 Paymentus agrees to provide Client with no-cost integrations to Advanced Utility Systems and Silverblaze

2. Miscellaneous:

2.1 This Amendment No. 3 is binding and inures to the benefit of the Parties and their respective successors andassigns.

2.2 All other terms and conditions of the Agreement not modified by this Amendment No.3 remain in full force andeffect.

2.3 This Amendment No. 3 may be executed in two or more counterparts, each of which shall be deemed to be anoriginal, but all of which shall constitute one and the same instrument.

IN WITNESS WHEREOF, the Parties hereto have caused this Amendment No.3 to be executed by their duly authorized representatives.

Client	PAYMENTUS CORPORATION
By: See next page	By:
Printed Name:	Printed Name: Peter Fanous
Title:	Title: Senior Vice President
Date:	Date: October 13, 2022

CONFIDENTIAL AND PROPRIETARY
Paymentus legal | Revised 6.10.20

CITY OF SANTA FE:

ALAN WEBBER, MAYOR

DATE: Dec 5, 2022

ATTEST:

KRISTINE BUSTOS MIHELCIC ,CITY CLERK
Special GB MTG 11/30/2022

CITY ATTORNEY'S OFFICE:

Marcos Martinez
Marcos Martinez (Oct 5, 2022 14:22 MDT)

SENIOR ASSISTANT CITY ATTORNEY

APPROVED:

Emily K. Oster
Emily K. Oster (Dec 2, 2022 17:44 MST)

EMILY OSTER, FINANCE DIRECTOR

5110351.510310
Org/Obj

ITEM # 18-0758

Paymentus

AMENDING AGREEMENT

Customer:	City of Santa Fe
Customer Address:	200 Lincoln Ave. Santa Fe, NM 87504
Contact for Notices to Customer:	Caryn Fiorina

This Amending Agreement is entered into as of the below signature date, by and between the Customer ("Customer") identified above and **Paymentus Corporation**, a Delaware Corporation ("Paymentus").

WHEREAS:

A - The parties entered into a Master Services Agreement originally dated March 23, 2017 and Amending Agreements dated October 31, 2017.

B - The parties now wish to amend Schedule A to increase the maximum payment amount from $500.00 to $10,000.00.

NOW, THEREFORE, in consideration of the mutual covenants hereinafter set forth, the receipt and sufficiency of which are hereby acknowledged, the parties, intending to be legally bound, hereby covenant and agree as follows:

Except for Schedule A as provided in this Amending Agreement, all provisions of the Master Service Agreement remain in full force and effect, un-amended.

IN WITNESS WHEREOF, the parties have caused this Agreement to be executed by their duly authorized representatives

Customer:	**Paymentus:**
By: [illegible]	By:
Name:	Name:
Title:	Title: SVP
Date:	Date: 7/20/18

Paymentus

Schedule A – Paymentus Service Fee Schedule

Paymentus Service Fee charged to the End User will be based on the following table:

Absorbed Fee Model	
Residential Utility Payments	
☐ Average Bill Amount: $100.00	
☐ Monthly Subscription Fee: $7,000.00	
Paymentus Service Fee per qualified utility rate transaction:	
☐ Credit/Debit Card	$0(Visa®, MasterCard®, Discover® Discount Utility Rate Program)
☐ Ach/e-Check	$0
Paymentus Service Fee per Non-qualified transactions (Non-qualified transactions applies to any transaction that does not qualify for a utility rate transaction. This may include a Business or Corporate card transactions).	
☐ Credit/Debit Card	$0(Visa®, MasterCard®, Discover® Discount Utility Rate Program)
☐ Ach/e-Check	$0

Note: Maximum payment amount for Utility payments will be set at $10,000.00 per transaction, with a minimum of $5. A chargeback of $9.95 on e-checks only applies per chargeback.

Paymentus may apply different limits per transactions for user adoption or to mitigate risks.

Monthly subscription fee of $7,000.00 includes unlimited e-checks transactions.

The merchant agreement with Paymentus and Chase will be utilized for e-check transactions only, as First Data/Wells Fargo will be providing credit/debit card merchant services. The monthly subscriptions fee is for the use of the Paymentus platform technology. At any time, the City may choose to revert back to the original pricing of per transaction using chase merchant services.

CITY OF SANTA FE:

ALAN WEBBER, MAYOR

DATE: 7/5/18

ATTEST:

YOLANDA Y. VIGIL, CITY CLERK
CC mtg 6/27/18

APPROVED AS TO FORM:

5/17
GENO ZAMORA, INTERIM CITY ATTORNEY

APPROVED:

7-3-18
INTERIM FINANCE DIRECTOR
Brad Rudisel

Business Unit/Line Item

Paymentus

AMENDING AGREEMENT

Customer:	City of Santa Fe
Customer Address:	200 Lincoln Avenue, Santa Fe NM, 87504
Contact for Notices to Customer:	Caryn Fiorina

This Amending Agreement is entered into as of October 18, 2017, by and between the Customer ("Customer") identified above and **Paymentus Corporation**, a Delaware Corporation ("Paymentus").

WHEREAS:

A - The parties entered into a Master Services Agreement dated March 23, 2017

B - The parties now wish to amend the Schedule A of the Master Services Agreement to Paymentus Service Fees.

NOW, THEREFORE, in consideration of the mutual covenants hereinafter set forth, the receipt and sufficiency of which are hereby acknowledged, the parties, intending to be legally bound, hereby covenant and agree as follows:

Schedule A of Master Services Agreement will be amended per Schedule A attached with this Amending Agreement.

Except the Schedule A, as provided in this Amending Agreement, all provisions of the Agreement remain in full force and effect, un-amended.

IN WITNESS WHEREOF, the parties have caused this Agreement to be executed by their duly authorized representatives

Customer:

By: _____

Name: Adam Johnson

Title: Finance Director

Date: 10/27/17

Paymentus:

By: _____

Name: Jerry Portocalis

Title: Senior Vice President

Date: October 31, 2017

Paymentus

Schedule A – Paymentus Service Fee Schedule

Paymentus Service Fee charged to the User will be based on one of the following table

Absorbed Fee Model

- Residential Utility Average Bill Amount $100.00
- Monthly Subscription Fee: $7,000.00 Billable upon go live
- Paymentus Service Fee per qualified utility rate transaction
  - Credit/Debit Card $ 0 (Visa, MasterCard, Discover, Amex Utility Rate)
  - ACH/ eCheck $ 0
- Paymentus Service Fee per Non-qualified transaction (Non-qualified transaction applies to any transaction that does not qualify for a utility rate transaction. This may include a Business or Corporate card transactions)
  - Credit/Debit Card 0% (Visa, MasterCard, Discover, Amex)
  - ACH/eCheck $ 0

Note: A chargeback fee of $9.95 on e-checks only applies per chargeback.

Paymentus may apply different limits per transactions for user adoption or to mitigate risks.

Monthly subscription fee of $7,000.00 includes unlimited e-check transactions.

The merchant agreement with Paymentus and Chase will be utilized for e-check transactions only, as First Data/Wells Fargo will be providing credit/debit card merchant services. The monthly subscription fee is for the use of the Paymentus platform technology. At any time, the City may choose to revert back to the original pricing of per transaction using Chase merchant services.

Exhibit B

Paymentus

MASTER SERVICES AGREEMENT

Client	Postal Pros delivered to the City of Santa Fe NM
Client Address:	200 Lincoln Avenue, Santa Fe NM, 87504
Contact for Notices to Client	Caryn Fiorina
Estimated Yearly Bills / Invoices	408,000

This Master Services Agreement ("Master Agreement") is entered into as of the Effective Date below, by and between the Client ("Client") identified above and **Postal Pros (delivered to the City of Santa Fe, NM)**, and **Paymentus Corporation**, a Delaware Corporation ("Paymentus").

WHEREAS Paymentus desires to provide and the Client desires to receive certain services under the terms and conditions set forth in this Agreement. Paymentus provides electronic bill payment services to utilities, municipalities, insurance and other businesses.

NOW, THEREFORE, in consideration of the mutual covenants hereinafter set forth, the receipt and sufficiency of which are hereby acknowledged, the parties, intending to be legally bound, hereby covenant and agree as follows. This Agreement consists of this signature page, General Terms and Conditions, and the attachments ("**Attachments**") with schedules ("**Schedules**") listed below:

Schedule A: Paymentus Service Fee Schedule
Schedule B: Additional Services

This Agreement represents the entire understanding between the parties hereto with respect to its subject matter and supersedes all other written or oral agreements heretofore made by or on behalf of Paymentus or Client with respect to the subject matter hereof and may be changed only by agreements in writing signed by the authorized representatives of the parties.

IN WITNESS WHEREOF, the parties have caused this Agreement to be executed by their duly authorized representatives.

Client:	Paymentus:
By: [signature]	By: [signature]
Name: Javier M Gonzales	Name: JERRY PORTOCALIS
Title: Mayor	Title: SVP
Date: 3-20-17	Date: 3-14-17

Payments

City:

By: _____

Name: _____

Title: _____

Date: _____

City:

By: _____

Name: _____

Title: _____

Date: _____

City:

By: _____

Name: _____

Title: _____

Date: _____

City:

By: _____

Name: _____

Title: _____

Date: _____

Paymentus

GENERAL TERMS AND CONDITIONS

1 **Definitions:**

For the purposes of this Agreement, the following terms and words shall have the meaning ascribed to them, unless the context clearly indicates otherwise.

1.1 **"Agreement** "or **"Contract"** shall refer to this Agreement, as amended from time to time, which shall constitute an authorization for the term of this contract for Paymentus to be the exclusive provider of services, stated herein, to the Client

1.2 **"User"** shall mean the users of the Client's services

1.3 **"Effective Date"** shall be the last date upon which the parties signed this Agreement. The Agreement will not be effective against any party until the said date

1.4 "Launch Date" shall be the date on which Client launches this service to the Users

1.5 "Payment" shall mean Users to make payments for Client's services or Client's bills

1.6 **"Payment Amount"** shall mean the bill amount User wants to pay to the Client

1.7 **"Non-consumer Cards"** shall mean credit cards which are issued for business use. These high-cost cards may include corporate cards, purchase cards, business cards, travel and entertainment cards.

1.8 **"Services"** shall include the performance of the Services outlined in section 2 of this Agreement

1.9 **"Paymentus Authorized Processor"** shall mean a Paymentus authorized merchant account provider and payment processing gateway

1.10 **"Average Bill Amount"** shall mean the total amount of Payments collected through Paymentus system in a given month divided by the number of the Payments for the same month.

2 **Description of Services to be performed**

2.1 **Scope of Services**

Paymentus shall provide Users the opportunity to make Payments by Visa, MasterCard, Discover, E-check and other payment methods as deemed necessary by Paymentus. Payments may be made by Interactive Telephone Voice Response System ("IVR") or secure Internet interface provided at the Paymentus Corporation's web site or other websites part of Paymentus' Instant Payment Network ("WebSites"), collectively referred to as the ("System" or "Platform").

2.2 **Professionalism**

Paymentus shall perform in a professional manner all Services required to be performed under this Agreement.

3 **Compensation**

3.1 **No Cost Installation**

Paymentus will charge no fees related to the initial setup and personalization of its standard service for both Web and IVR interfaces.

3.2 **Paymentus Service Fee**

For each payment, Paymentus will charge a Paymentus Service Fee as per Schedule A (hereinafter called "Paymentus Service Fee").

For each payment, the Paymentus Service Fee collected will be used to pay the corresponding Credit Card transaction fees or transaction fees associated with Debit Cards or eChecks (hereinafter called "Transaction Fees") except for the return items (eCheck returns or Credit/Debit Card chargebacks).

A schedule of Paymentus Service Fee is attached hereto as Schedule A. The Paymentus Service Fee is based on the Average Bill Amount, current payment method mix (credit vs debit vs e-check) and on the assumption that the total number of payments and the total Payment Amount collected each month from the use of non-consumer cards shall be under 5% of the total per month ("Fee Assumptions"). Client shall be billed an additional Paymentus Service Fees based on the rate of 3.5% of the Payment Amount for any excess amount if the Fee Assumptions vary by more than 5%. Paymentus

can amend this schedule upon prior written notice to the Client, if such change is required due to changes in the Visa and MasterCard regulations or changes in Credit Card fees or changes in the Average Bill Amount or changes in Fee Assumptions.

4 Payment Processing

4.1 Integration with Client's Billing System

At no cost to Client, Paymentus will develop one (1) file format interface with Client's billing system using Client's existing text file format currently used to post payments to Client's billing system. Client will be responsible to provide Paymentus with the one file format specification and will fully cooperate with Paymentus during the development of the said interface. If Client chooses to create an automated file integration process to download the posting file, due to Paymentus security requirements, Client will use Paymentus specified integration process. Paymentus platform is an independent full service fully hosted platform per PCI-DSS requirements for a fully hosted solution. As such, Paymentus platform does and can function independent of any billing system integration. A payment posting file can be emailed or downloaded from Paymentus Agent Dashboard. If Client chooses to have Paymentus platform integrated with its billing system, Paymentus offers two options:

(i) Paymentus standard integration specification that Client can use to integrate its billing systems with Paymentus platform ("Standard Integration"); (or)

(ii) Paymentus to either customize or configure its platform to integrate with Client using file specification or APIs supported by Client's billing system ("Client Specific Integration")

If Client chooses Standard Integration, Paymentus agrees to fully cooperate with Client and provide its specification to Client. Paymentus also agrees to participate in meetings with Client's software vendor to provide any information or clarifications needed to understand Standard Integration. Time is of the essence and Paymentus agrees to provide all integration/interface specifications within 30 days from the Effective Date. Client will take commercially reasonable steps to develop the integration within 60 days from the date on which Client has received all integration specifications from Paymentus. Parties agree that if Paymentus does not cooperate fully, it can lead to Client being unable to perform its duties to deliver the integration in time.

If Client chooses Client Specific Integration, Paymentus agrees to develop such integration at no cost to Client, provided however, Client agrees to fully cooperate with Paymentus and cause its software vendors to fully cooperate with Paymentus. Client agrees to provide all specification required for Client specific integration. Client further agrees to participate in testing with Paymentus and if needed, cause its billing software vendors to participate in testing. Time is of the essence and Client agrees to provide or make available all integration/interface specifications within 30 days from the Effective Date. Paymentus will take commercially reasonable steps to develop the integration within 60 days from the date on which Paymentus has received all the integration specifications from Client or its vendors. Parties agree that if Client does not cooperate fully or is unable to cause its software vendors to cooperate fully with Paymentus, it can lead to Paymentus being unable to perform its duties to deliver the integration in time.

Based on Client's use of Paymentus platform and respective modules selected under this Agreement, Paymentus will require the following integration points:

(i) For one-time Payment Module:
   a. Customer Information – Text File or Real-time
   b. Payment Posting – Text File or Real-time

(ii) For Recurring Payment Module
   a. Text File

(iii) For E-billing Module
   a. Billing Data - Text File or Real-time link to billing data

(iv) For Outbound Notification
   a. Audience File – Text File for customer engagement messages

Each of these can be based on Standard Integration or Client Specific Integration.

4.2 PCI Compliance

For PCI Compliance, Client has two options for using Paymentus platform:

(i) Paymentus Fully Hosted Solution; or
(ii) Any other configuration

To substantially reduce or eliminate any PCI compliance risks and to render all Client systems out of scope from PCI compliance requirements, Client agrees to use Paymentus' fully hosted service where Paymentus uses its own platform to capture

Payments and to manage the entire (end to end) user experience from all channels for Payment acceptance Web, Mobile, IVR, POS devices (per Paymentus recommended setup), recurring payments, Ebill Presentment ("Paymentus Fully Hosted Solution"). If Client chooses any other integration such as third party web pages integrated with Paymentus APIs, third party gateway pages, or its own IVR systems or POS solution not recommended by Paymentus, or a cashiering module from third party, Client expressly agrees that Client shall not be exempt from PCI requirements and shall be liable for any data breaches occurring on its own systems as Client's recognizes that Client systems are participating in the transactions and are in scope for PCI compliance. Under such circumstances, Paymentus shall not be responsible for any PCI obligations outside of Paymentus own platform and Paymentus expressly disclaims any PCI or security obligations related to Client systems or any third party systems that participate in the payment transactions that are outside of Paymentus Platform.

Paymentus highly recommends that Client uses Paymentus Fully Hosted Solution to substantially reduce its PCI compliance and data breach risks.

If Client chooses to use any other option other than Paymentus Fully Hosted Solution, Client agrees and warrants that Client shall remain PCI compliant throughout the term of this Agreement. For clarity, just because Client uses PCI compliant applications such as its billing software, it does not eliminate the need for Client to be PCI compliant. Per PCI requirements, if a party's systems participate in processing, or accepting or storing card transactions, such party is required to be PCI compliant as the systems are in scope.

4.3 Explicit User Confirmation

Paymentus shall confirm the dollar amount of all Payments to be charged to a Card and electronically obtain the User approval of such charges prior to initiating Card authorizations transaction. Paymentus will provide User with electronic confirmation of all transactions.

4.4 Merchant Account

Paymentus will arrange for the Client to have a merchant account with the Paymentus Authorized Processor for processing and settlement of the credit card transactions.

4.5 Card Authorization

For authorization purposes, Paymentus will electronically transmit all Card transactions to the appropriate card associations in real time as the transactions occur.

4.6 Settlement

Paymentus together with its authorized Card processor shall forward the payment transactions to the appropriate card organizations for settlement directly to the Client's depository bank account previously designated by the Client (hereinafter the "Client Bank Account").

Paymentus will debit the Paymentus Service Fees from Client's account on a monthly basis.
Paymentus together with Paymentus Authorized Processor will continuously review its settlement and direct debit processes for its simplicity and efficiencies. Client and Paymentus agree to fully co-operate with each other if Paymentus were to change its settlement and invoicing processes.

5 General Conditions of Services

5.1 Service Reports

Paymentus shall provide Client with reports summarizing use of the Services by Users for a given reporting period.

5.2 User Adoption Communication by Client

Client will make Paymentus' Services available to its residential and commercial Clients by different means of Client communication including a) through bills, invoices and other notices; b) by providing IVR and Web payment details on the Client's website including a "Pay Now" or similar link on a mutually agreed prominent place on the web site; c) through Client's general IVR/Phone system; and d) other channels deemed appropriate by the Client.

Paymentus shall provide Client with logos, graphics and other marketing materials for Client's use in its communications with its users regarding the Services and/or Paymentus.

Both parties agree that Paymentus will be presented as a payment method option. Client will communicate Paymentus option to its end residential and commercial Clients wherever Client usually communicates its other payment methods.

5.3 Independent Contractor

Client and Paymentus agree and understand that the relationship between both parties is that of an independent contractor.

5.4 Client's Responsibilities

In order for Paymentus to provide Services outlined in this Agreement, the Client shall co-operate with Paymentus by:

(i) Client will enter into all applicable merchant Card or cash management agreements.

(ii) For the duration of this Agreement, Client will keep a bill payment link connecting to Paymentus System at a prominent and mutually agreed location on the Client website. The phone number for the IVR payment will also be added to the web site. Client will also add the IVR payment option as part of the Client's general phone system.

(iii) User Adoption marketing as described in 5.2.

(iv) Within 30 days of the merchant account setup, Client will launch the service to the Users.

(v) For the purpose of providing Client a posting file for posting to Client's billing system, Client will provide the file format specification currently used to post its payments to the billing system. Client will fully cooperate with Paymentus and provide the information required to integrate with Client's billing system.

6 Governing Laws

This Agreement shall be governed by the laws of the state of New Mexico.

7 Communications

7.1 Authorized Representative

Each party shall designate an individual to act as a representative for the respective party, with the authority to transmit instructions and receive information. The parties may from time to time designate other individuals or change the individuals.

7.2 Notices

All notices of any type hereunder shall be in writing and shall be given by Certified Mail or by a national courier or by hand delivery to an individual authorized to receive mail for the below listed individuals, all to the following individuals at the following locations:

To Client City of Santa Fe
C/O: Donald Martinez
Address: 801 San Mateo, Santa Fe, NM 87505
Email: dwmartinez@santafenm.gov

To Paymentus
C/O: President and CEO
Address: 13024 Ballantyne Corporate Place
Suite 450
Charlotte, NC 28277
Email: ceo@paymentus.com

Notices shall be declared to have been given or received on the date the notice is physically received if given by hand delivery, or if notices given by US Post, then notice shall be deemed to have been given upon on date said notice was deposited in the mail addressed in the manner set forth above. Any party hereto by giving notice in the manner set forth herein may unilaterally change the name of the person to whom notice is to be given or the address at which the notice is to be received.

7.3 Interpretation

It is the intent of the parties that no portion of this Agreement shall be interpreted more harshly against either of the parties as the drafter.

7.4 Amendment of Agreement

Modifications or changes in this Agreement must be in writing and executed by the parties bound to this Agreement.

7.5 Severability

If a word, sentence or paragraph herein shall be declared illegal, unenforceable, or unconstitutional, the said word, sentence or paragraph shall be severed from this Agreement, and this Agreement shall be read as if said word, sentence or paragraph did not exist.

7.6 Attorney's Fees

Should any litigation arise concerning this Agreement between the parties hereto, the parties agree to bear their own costs and attorney's fees.

7.7 Confidentiality

Client will not disclose to any third party or use for any purpose inconsistent with this Agreement any confidential or proprietary non-public information it obtains during the term of this Agreement about Paymentus' business, operations, financial condition, technology, systems, no-how, products, services, suppliers, Clients, marketing data, plans, and models, and personnel. Paymentus will not disclose to any third party or use for any purpose inconsistent with this Agreement any confidential User information it receives in connection with its performance of the services.

7.8 Intellectual Property

In order that the Client may promote the Services and Paymentus' role in providing the Services, Paymentus grants to Client a revocable, non-exclusive, royalty-free, license to use Paymentus' logo and other service marks (the "Paymentus Marks") for such purpose only. Client does not have any right, title, license or interest, express or implied in and to any object code, software, hardware, trademarks, service mark, trade name, formula, system, know-how, telephone number, telephone line, domain name, URL, copyright image, text, script (including, without limitation, any script used by Paymentus on the IVR or the WebSite) or other intellectual property right of Paymentus ("Paymentus Intellectual Property") All Paymentus Marks, Paymentus Intellectual Property, and the System and all rights therein (other than rights expressly granted herein) and goodwill pertain thereto belong exclusively to Paymentus.

7.9 Force Majeure

Paymentus will be excused from performing the Services as contemplated by this Agreement to the extent its performance is delayed, impaired or rendered impossible by acts of God or other events that are beyond Paymentus' reasonable control and without its fault or judgment, including without limitation, natural disasters, war, terrorist acts, riots, acts of a governmental entity (in a sovereign or contractual capacity), fire, storms, quarantine restrictions, floods, explosions, labor strikes, labor walk-outs, extra-ordinary losses utilities (including telecommunications services), external computer "hacker" attacks, and/or delays of common carrier.

7.10 Time of the Essence

Paymentus and Client acknowledge and agree that time is of the essence for the completion of the Services to be performed and each parties respective obligations under this Agreement.

8 Indemnification

8.1 Paymentus Indemnification and Hold Harmless

Paymentus agrees to the fullest extent permitted by law, to indemnify and hold harmless the Client and its governing officials, agents, employees, and attorneys (collectively, the "Client Indemnitees") from and against all liabilities, demands, losses, damages, costs or expenses (including reasonable attorney's fees and costs), incurred by any Client Indemnitee as a result or arising out of (i) the wilful misconduct or negligence of Paymentus in performing the Services or (ii) a material breach by Paymentus of its covenants.

8.2 Warranty Disclaimer

Except as expressly set forth in this Agreement, Paymentus disclaims all other representations or warranties, express or implied, made to the Client or any other person, including without limitation, any warranties regarding quality, suitability, merchantability, fitness, for a particular purpose or otherwise of any services or any good provided incidental to the Services provided under this Agreement.

8.3 Limitation of Liability

Notwithstanding the foregoing, the parties agree that neither party shall be liable to the other for any lost profits, lost savings or other special, indirect or consequential damages, even if the party has been advised of or could have foreseen the possibility of such damages. Paymentus' total liability for damages for any and all actions associated with this Agreement or the Services shall in no event exceed the specific dollar amount of the Paymentus Service Fee paid to Paymentus for the particular payment transaction which is the subject matter of the claim of damage.

9 Term and Termination

9.1 Term

The term of this Agreement shall commence on the effective date of this Agreement and continue for a period of 4 (four) years ("Initial Term") from the Launch Date. Services under this Agreement shall begin within 30 days of the merchant account setup.

At the end of the Initial Term, this Agreement will automatically renew for successive three (3) year periods unless either Client or Paymentus provide the other party with not less than 6 (six) months prior written notice before such automatic renewal date that such party elects not to automatically renew the term of this Agreement.

9.2 Material Breach

A material breach of this Agreement shall be cured within 90 (ninety) days ("Cure Period") after a party notifies the other of such breach. In the event, such material breach has not been cured within the Cure Period, the non-breaching party can terminate this Agreement by providing the other party with a 30 (thirty) days' notice.

9.3 Upon Termination

Upon termination of this Agreement, the parties agree to cooperate with one another to ensure that all Payments are accounted for and all refundable transactions have been completed. Upon termination, Paymentus shall cease all Services being provided hereunder unless otherwise directed by the Client in writing.

Paymentus

Schedule A – Paymentus Service Fee Schedule

Paymentus Service Fee charged to the Client will be based on the following model:

Absorbed Fee Model

☐ Residential Utility Average Bill Amount: $100.00

☑ Paymentus Service Fee per qualified utility rate transaction

- Credit/Debit Card $ 1.73 (Visa, MasterCard, Discover, Amex Utility Rate)
- ACH/ eCheck $ 0.40

Maximum Amount per Qualified payment is $500.00. Multiple payments can be made only at the counter.

☐ Paymentus Service Fee per Non-qualified transaction (Non-qualified transaction applies to any transaction that does not qualify for a utility rate transaction. This may include a Business or Corporate card transactions).

- Credit/Debit Card 2.65% (Visa, MasterCard, Discover, Amex)
- ACH/eCheck $ 0.40

Note: A chargeback fee of $9.95 applies per chargeback.

Paymentus may apply different limits per transactions for user adoption or to mitigate risks.

Paymentus

Schedule B: Additional Services

Service Type 1	Paymentus Service Fee
E-Bill Presentment	12 months bill history data no charge File creation set up fee waived

Accept Service 1 ☑ Initial DC

Service Type 2	Paymentus Service Fee
Outbound Notification Messages	2,000 Monthly IVR/SMS Text/Email Messages No Charge 2,001+ Messages Overage Fee: $0.15 per IVR/SMS message $0.05 per Email message Unlimited Inbound IVR Payment Minutes

Accept Service 2 ☑ Initial LP

Service Type 3	Paymentus Service Fee
Mobile Payment Platform	No Setup fee Transaction fees as outlined in Schedule A

Accept Service 3 ☑ Initial LP

Paymentus

Service Type 4	Paymentus Service Fee
Enterprise Payment Aggregator (Online Banking/E-Lockbox)	$0.09 per Transaction

Accept Service 4 ☐ Initial ____

Customer:

By: _____

Name: _____

Title: _____

Date: _____

Paymentus

By: _____

Name: JERRY PORTOCALIS

Title: SVP

Date: 3-14-17

Client#: 753617 PAYMENTUS

ACORD™ CERTIFICATE OF LIABILITY INSURANCE

DATE (MM/DD/YYYY) 08/15/2023

THIS CERTIFICATE IS ISSUED AS A MATTER OF INFORMATION ONLY AND CONFERS NO RIGHTS UPON THE CERTIFICATE HOLDER. THIS CERTIFICATE DOES NOT AFFIRMATIVELY OR NEGATIVELY AMEND, EXTEND OR ALTER THE COVERAGE AFFORDED BY THE POLICIES BELOW. THIS CERTIFICATE OF INSURANCE DOES NOT CONSTITUTE A CONTRACT BETWEEN THE ISSUING INSURER(S), AUTHORIZED REPRESENTATIVE OR PRODUCER, AND THE CERTIFICATE HOLDER.

IMPORTANT: If the certificate holder is an ADDITIONAL INSURED, the policy(ies) must have ADDITIONAL INSURED provisions or be endorsed. If SUBROGATION IS WAIVED, subject to the terms and conditions of the policy, certain policies may require an endorsement. A statement on this certificate does not confer any rights to the certificate holder in lieu of such endorsement(s).

PRODUCER	CONTACT NAME: William A. Cilente - For MMA-NE
Marsh & McLennan Agency LLC Park 80 West, Plaza Two 250 Pehle Avenue, Suite 400 Saddle Brook, NJ 07663	PHONE (A/C, No, Ext): 201 845-6600 FAX (A/C, No): E-MAIL ADDRESS: William.Cilente@MarshMMA.com

INSURED	INSURER(S) AFFORDING COVERAGE	NAIC #
Paymentus Holdings, Inc 11605 North Community House Rd. ,Ste 300 Charlotte, NC 28277	INSURER A : AIG Specialty Insurance Company	26883
	INSURER B :	
	INSURER C :	
	INSURER D :	
	INSURER E :	
	INSURER F :	

COVERAGES CERTIFICATE NUMBER: REVISION NUMBER:

THIS IS TO CERTIFY THAT THE POLICIES OF INSURANCE LISTED BELOW HAVE BEEN ISSUED TO THE INSURED NAMED ABOVE FOR THE POLICY PERIOD INDICATED. NOTWITHSTANDING ANY REQUIREMENT, TERM OR CONDITION OF ANY CONTRACT OR OTHER DOCUMENT WITH RESPECT TO WHICH THIS CERTIFICATE MAY BE ISSUED OR MAY PERTAIN, THE INSURANCE AFFORDED BY THE POLICIES DESCRIBED HEREIN IS SUBJECT TO ALL THE TERMS EXCLUSIONS AND CONDITIONS OF SUCH POLICIES. LIMITS SHOWN MAY HAVE BEEN REDUCED BY PAID CLAIMS.

INSR LTR	TYPE OF INSURANCE	ADDL INSR	SUBR WVD	POLICY NUMBER	POLICY EFF (MM/DD/YYYY)	POLICY EXP (MM/DD/YYYY)	LIMITS
	COMMERCIAL GENERAL LIABILITY CLAIMS-MADE OCCUR						EACH OCCURRENCE $ DAMAGE TO RENTED PREMISES (Ea occurrence) $ MED EXP (Any one person) $
	GEN'L AGGREGATE LIMIT APPLIES PER: POLICY PRO-JECT LOC OTHER						PERSONAL & ADV INJURY $ GENERAL AGGREGATE $ PRODUCTS - COMP/OP AGG $
	AUTOMOBILE LIABILITY ANY AUTO OWNED AUTOS ONLY HIRED AUTOS ONLY SCHEDULED AUTOS NON-OWNED AUTOS ONLY						$ COMBINED SINGLE LIMIT (Ea accident) $ BODILY INJURY (Per person) $ BODILY INJURY (Per accident) $ PROPERTY DAMAGE (Per accident) $
	UMBRELLA LIAB OCCUR EXCESS LIAB CLAIMS-MADE DED RETENTION $						$ EACH OCCURRENCE $ AGGREGATE $
	WORKERS COMPENSATION AND EMPLOYERS' LIABILITY ANY PROPRIETOR/PARTNER/EXECUTIVE OFFICER/MEMBER EXCLUDED? Y / N (Mandatory in NH) If yes, describe under DESCRIPTION OF OPERATIONS below	N/A					$ PER STATUTE OTH-ER E.L. EACH ACCIDENT $ E.L. DISEASE - EA EMPLOYEE $ E.L. DISEASE - POLICY LIMIT $
A	Professional and Cyber Liability	X		014154505	08/09/2023	08/09/2024	$10,000,000 Per Occ. $10,000,000 Annual Agg.

DESCRIPTION OF OPERATIONS / LOCATIONS / VEHICLES (ACORD 101, Additional Remarks Schedule, may be attached if more space is required)

Included as Additional Insured when required by written contract, agreement or permit, and subject to the provisions and limitations of the policy.

Excess Professional and Cyber Policies:
(See Attached Descriptions)

CERTIFICATE HOLDER

City of Santa Fe (NM)
200 Lincoln Ave
Santa Fe, NM 87504

CANCELLATION

SHOULD ANY OF THE ABOVE DESCRIBED POLICIES BE CANCELLED BEFORE THE EXPIRATION DATE THEREOF, NOTICE WILL BE DELIVERED IN ACCORDANCE WITH THE POLICY PROVISIONS.

AUTHORIZED REPRESENTATIVE

Wm. A. Cilente

© 1988-2015 ACORD CORPORATION. All rights reserved.
The ACORD name and logo are registered marks of ACORD

NPMYS

3203728 Paymentus amend 5 - Corrected 2

Final Audit Report 2024-06-05

Created:	2024-05-22
By:	Kristy Miera (kamiera@santafenm.gov)
Status:	Signed
Transaction ID:	CBJCHBCAABAAQxO-Z9ajkz1sMccdoo4DgmKcsBv71T3s

"3203728 Paymentus amend 5 - Corrected 2" History

Document created by Kristy Miera (kamiera@santafenm.gov)
2024-05-22 - 6:03:25 PM GMT- IP address: 173.186.219.23

Document emailed to ajhopkins@santafenm.gov ajhopkins@santafenm.gov (ajhopkins@santafenm.gov) for signature
2024-05-22 - 6:07:20 PM GMT

Email viewed by ajhopkins@santafenm.gov ajhopkins@santafenm.gov (ajhopkins@santafenm.gov)
2024-05-22 - 8:35:53 PM GMT- IP address: 104.47.65.254

Document e-signed by ajhopkins@santafenm.gov ajhopkins@santafenm.gov (ajhopkins@santafenm.gov)
Signature Date: 2024-05-22 - 8:36:21 PM GMT - Time Source: server- IP address: 63.232.20.2

Document sent to JoAnn Lovato (jdlovato@santafenm.gov) and Travis Dutton-Leyda (tkduttonleyda@santafenm.gov) for signature. One of them to sign
2024-05-22 - 8:36:25 PM GMT

Email viewed by JoAnn Lovato (jdlovato@santafenm.gov)
2024-05-22 - 8:36:41 PM GMT- IP address: 73.242.167.139

Document e-signed by JoAnn Lovato (jdlovato@santafenm.gov)
Signature Date: 2024-05-22 - 8:53:11 PM GMT - Time Source: server- IP address: 73.242.167.139

Document emailed to EMILY OSTER (ekoster@santafenm.gov) for signature
2024-05-22 - 8:53:16 PM GMT

Email viewed by EMILY OSTER (ekoster@santafenm.gov)
2024-05-24 - 5:13:34 PM GMT- IP address: 104.47.65.254

Email viewed by EMILY OSTER (ekoster@santafenm.gov)
2024-06-03 - 5:17:39 PM GMT- IP address: 104.47.64.254

Powered by Adobe Acrobat Sign

Email viewed by EMILY OSTER (ekoster@santafenm.gov)

2024-06-05 - 10:28:18 PM GMT- IP address: 104.47.65.254

Document e-signed by EMILY OSTER (ekoster@santafenm.gov)

Signature Date: 2024-06-05 - 10:28:29 PM GMT - Time Source: server- IP address: 63.232.20.2

Agreement completed.

2024-06-05 - 10:28:29 PM GMT

Powered by
Adobe
Acrobat Sign

Paymentus
11605 North Community House Road, Suite 300
Charlotte, NC 28277
888-440-4826

ITEM #22-0566
Munis # 3203728

AMENDMENT NO. 3
TO MASTER SERVICES AGREEMENT EFFECTIVE 3/23/2017.

This Amendment No. 3 ("Amendment 3") amends the Master Services Agreement effective as of March 23, 2017, which was modified by Amendment effective date October 31, 2017, and Amendment No. 2 effective date July 20, 2018 (collectively the "Agreement") between City of Santa Fe ("Client") with a principal place of business located at 801 W San Mateo Santa Fe, NM 87505, and Paymentus Corporation, a State of Delaware Corporation with a principal place of business 11605 North Community House Road, Suite 300, Charlotte, NC 28277 ("Paymentus"). Client and Paymentus are also referred to as "Party" and collectively as the "Parties." This Amendment No. 3 is effective at the time both Parties have signed Amendment No. 3.

STATEMENT OF PURPOSE

Client and Paymentus entered into the Agreement for electronic bill payment services.

The Parties desire to amend the Agreement in the following ways

- Renew the contract term period
- Update Schedule A of Agreement to include additional Paymentus Services to Client subsidiaries and modify Paymentus Fees
- Include integration with Advanced Utility Services and Silverblaze

AGREEMENT

In consideration of mutual covenants contained herein, and other good and valuable consideration, the receipt and sufficiency of which are hereby acknowledged, Client and Paymentus agree as follows:

1. Amendment. The Agreement is hereby amended as of the Effective Date of this Amendment No. 3 as follows:

1.1 Schedule A (Paymentus Service Fee Schedule) of the Agreement is hereby deleted and the new Schedule A following is substituted in lieu thereof.

1.2 The parties desire to establish a direct payment processing relationship between the parties. The following language is hereby deleted from Schedule A:

a) "The merchant agreement with Paymentus and Chase will be utilized for e-check transactions only, as First Data/Wells Fargo will be providing credit/debit card merchant services. The monthly subscription fee is for the use of the Paymentus platform technology. At any time, the City may choose to revert back to the original pricing per transaction using Chase merchant services."

1.3 The parties desire to amend Schedule A of the Agreement to remove the Monthly Subscription fee of $7,000.00 in accordance with section 1.2 above

1.4 The parties desire to amend Schedule A of the Agreement to include digital wallet payment options including PayPal, PayPal Credit, Venmo, Amazon, Alexa, and Walmart Pay

1.5 The Parties desire to amend the Agreement to replace section 5 of the Master Services Agreement to extend the contract term through June 30, 2025. Agreement shall be renewable for additional successive twelve (12) month auto-renewal term periods. In no event, shall the term exceed the time allowed by NMSA13-1-150.

CONFIDENTIAL AND PROPRIETARY
Paymentus legal | Revised 6.10.20

1.6 Paymentus agrees to provide Client with no-cost integrations to Advanced Utility Systems and Silverblaze

2. Miscellaneous:

2.1 This Amendment No. 3 is binding and inures to the benefit of the Parties and their respective successors andassigns.

2.2 All other terms and conditions of the Agreement not modified by this Amendment No.3 remain in full force andeffect.

2.3 This Amendment No. 3 may be executed in two or more counterparts, each of which shall be deemed to be anoriginal, but all of which shall constitute one and the same instrument.

IN WITNESS WHEREOF, the Parties hereto have caused this Amendment No.3 to be executed by their duly authorized representatives.

Client

By: _____See next page_____

Printed Name: _____

Title: _____

Date: _____

PAYMENTUS CORPORATION

By: _____

Printed Name: Peter Fanous

Title: Senior Vice President

Date: October 13, 2022

CONFIDENTIAL AND PROPRIETARY
Paymentus legal | Revised 6.10.20

CITY OF SANTA FE:

ALAN WEBBER, MAYOR

DATE: Dec 5, 2022

ATTEST:

KRISTINE BUSTOS MIHELCIC ,CITY CLERK

Special GB MTG 11/30/2022

CITY ATTORNEY'S OFFICE:

Marcos Martinez
Marcos Martinez (Oct 5, 2022 14:22 MDT)

SENIOR ASSISTANT CITY ATTORNEY

APPROVED:

Emily K. Oster
Emily K. Oster (Dec 2, 2022 17:44 MST)

EMILY OSTER, FINANCE DIRECTOR

5110351.510310 AH
Org/Obj AH

City of Santa Fe New Mexico

Memo

Date: **October 12, 2022**

To: **City Council**
Finance Committee
Public Utility/Public Works Committee

Via: **Shannon Jones, Utility Department Director** SJ

From: **Nancy Jimenez, Utility Billing Division Director** NLJ

Re: **Amendment #3 for Paymentus**

Background/Summary:
The Utility Billing is respectfully asking to amend the Paymentus Master Agreement contract to remove the monthly charge from Paymentus electronic bill pay services of $7,000 for the utility account payment monthly subscription fee.

As we move forward with the upgrade to our utility billing system and the removal of the exclusivity clause with Wells Fargo the attached amendment with Paymentus will eliminate the monthly subscription fee and change to a transaction fee.

This will reduce the yearly cost of $84,000 for year 3 and year 4 for a total savings of $168,000.00 and once approved will reduce the current Fiscal Year accordingly that had these costs tied to the Postal Pro Contract.

Requested Action:
Approval of Amendment #2 for FY22/23 through FY24/25.

Paymentus
11605 North Community House Road, Suite 300
Charlotte, NC 28277
888-440-4826

SCHEDULE A – PAYMENTUS FEE SCHEDULE TO THE MASTER SERVICES AGREEMENT BETWEEN CITY OF SANTA FE AND PAYMENTUS

The Services will initially consist of those indicated by a check box on the following table. The Paymentus Fee will be as specified below, and will be paid by the Client, unless designated as a User paid fee.

Check to Select the Channel	Channels	Advanced Services	Payment Methods & Channels	Paymentus Fee in US DOLLARS	Check if User Paid Fee
☒	Instant Payment Network™	Customer Engagement	All payment channels and methods offered under IPN such as PayPal, Venmo, PayPal Credit ,Secure PDF Push, Mobile Apps and others as offered by Payments from time to time	$1.63 per credit/debit /digital wallet payments $0.40 per echeck 2.95% per non-qualified payments	☐
☒	Direct Payments (Web, IVR, Recurring, Agent Assisted)	Customer Engagement	Credit, Debit, ACH	$1.63 per credit/debit /digital wallet payments $0.40 per echeck 2.95% per non-qualified payments	☐

Note:

- Average Bill Amount: $100.00.
- Maximum Amount per Payment is $10,000.00. Multiple payments may be made.
- Paymentus may apply different limits per transactions for user adoption or to mitigate risks
- Pricing is subject to change per entity as needed and will be written in the amendments.
- Chargebacks and returned checks will be billed at $9.95 per item.

CONFIDENTIAL AND PROPRIETARY
Paymentus legal | Revised 6.10.20

City of Santa Fe

Real Estate Summary of Contracts, Agreements, Amendments & Leases

Section to be completed by department

1. Munis Contract # 3203728

Contractor: **Paymentus**

Description: **Master Services Agreement Electronic Bill payment Services under Postal Pros exhibit**

Contract ☐ Agreement ☐ Lease / Rent ☐ Amendment ☉

Term Start Date: **3/13/17** Term End Date: **03/13/24**

☑ Approved by Council Date: **6/27/18**

Contract / Lease: **Services agreement**

Amendment # **#3** to the Original Contract / Lease # **18-0758**

Increase/(Decrease) Amount $ **($168,000)**

Extend Termination Date to: **06/30/25**

☑ Approved by Council Date: **Pending**

Amendment is for: **decrease monthly charge amount for FY 24 and FY 25 extend term**

2. **HISTORY** of Contract, Amendments & Lease / Rent - Please Elaborate (option: attach spreadsheet if multiple amendments)
#18-0758 #1 and Master Services agreement comp and term appvd 6/27/18
#2 Schedule A amendment signed by Finance Director 10/27/17

3. **Procurement History:**

Purchasing Officer Review: Oct 26, 2022 Date:

Comment & Exceptions: Remove Subscription Fees

4. **Funding Source:** **UCS Enterprise Fund** **Org / Object:** **5110351.510310**

Andy Hopkins
Andy Hopkins (Oct 25, 2022 16:46 MDT)
Budget Officer Approval: Oct 25, 2022 Date:

Comment & Exceptions:

Staff Contact who completed this form: **Maya Martinez** Phone # **4271**

Email: **mfmartinez@santafenm.gov**

To be recorded by City Clerk:

Clerk #

Date of Execution:

CITY OF SANTA FE PROCUREMENT CHECKLIST

Contractor Name: Valli dba Postal Pros Southwest /Paymentus Exhibit

Procurement Title: RFP 2 I/32 /P Utility Bill Print and Mailing

Procurement Method: State Price Agreement ☐ *Cooperative* ☐ *Sole Source* ☐ *Other* ☐ _____

Exempt ☒ *Request For Proposal (*RFP) ☐ *Invitation To Bid (ITB)* ☐ *Contract under 60K* ☐ *Contract over 60K* ☐

Department Requesting—Public Utilities Department / UCS——— Staff Name Nancy Jimenez

Procurement Requirements:
A procurement file shall be maintained for all contracts, regardless of the method of procurement. The procurement file shall contain the basis on which the award is made, all submitted bids, all evaluation materials, score sheets, quotations and all other documentation related to or prepared in conjunction with evaluation, negotiation, and the award process. The procurement shall contain a written determination from the Requesting Department, signed by the purchasing officer, setting forth the reasoning for the contract award decision before submitting to the Committees.

REQUIRED DOCUMENTS FOR APPROVAL BY PURCHASING*

YES	N/A	
☒	☐	Approved Procurement Checklist (by Purchasing)
☒	☐	Memo addressed to City Manager (under 60K) Committees/City Council (over 60K)
☐	☒	State Price Agreement
☒	☐	RFP
☒	☐	Evaluation Committee Report
☐	☒	ITB
☐	☒	Bib Tab
☐	☒	Quotes (3 valid current quotes)
☐	☒	Cooperative Agreement
☐	☒	Sole Source Request and Determination Form
☐	☒	Contractors Exempt Letter
☒	☐	Purchasing Officers approval for exempt procurement
☐	☒	BAR
☐	☒	FIR
☒	☐	Executed Contract, Agreement or Amendment
☒	☐	Current Business Registration and CRS numbers on contract or agreement
☒	☐	Summary of Contracts and Agreements form
☐	☒	Certificate of Insurance
☐	☒	All documentation presented to Committees
☐	☐	Other: _____

Nancy Jimenez, UCS Division Director

Department Rep Printed Name (attesting that all information included)	Title	Date
[signature]	Contracts Supervisor	Oct 26, 2022
Purchasing Officer (attesting that all information is reviewed)	Title	Date

Include all other substantive documents and records of communication that pertain to the procurement and any resulting contract.

*

City of Santa Fe

Treasury Department
200 Lincoln Ave.
Santa Fe, New Mexico 87504-0909
505-955-6551

BUSINESS REGISTRATION

Business Name: PAYMENTUS CORPORATION

Business Location: 11605 N COMMUNITY HOUSE RD
CHARLOTTE, NC 28277

CRS Number: 03246742007

Owner: PAYMENTUS CORPORATION

License Number: 233550

License Type: Business License - Renewable

Issued Date: September 14, 2022

Classification: Out of Jurisdiction Business License

Expiration Date: September 14, 2023

Fees Paid: $10.00

PAYMENTUS CORPORATION
11605 N COMMUNITY HOUSE RD
CHAROLETTE, NC 28277

THIS IS NOT A CONSTRUCTION PERMIT OR SIGN PERMIT. APPROPRIATE PERMITS MUST BE OBTAINED FROM THE CITY OF SANTA FE BUILDING PERMIT DIVISION PRIOR TO COMMENCEMENT OF ANY CONSTRUCTION OR THE INSTALLATION OF ANY EXTERIOR SIGN.

THIS REGISTRATION/LICENSE IS NOT TRANSFERRABLE TO OTHER BUSINESSES OR PREMISES.

TO BE POSTED IN A CONSPICUOUS PLACE

Ver. 16 2/7/2020

Client#: 1057753 PAYMEHOL

ACORD™ CERTIFICATE OF LIABILITY INSURANCE

DATE (MM/DD/YYYY): 10/13/2022

THIS CERTIFICATE IS ISSUED AS A MATTER OF INFORMATION ONLY AND CONFERS NO RIGHTS UPON THE CERTIFICATE HOLDER. THIS CERTIFICATE DOES NOT AFFIRMATIVELY OR NEGATIVELY AMEND, EXTEND OR ALTER THE COVERAGE AFFORDED BY THE POLICIES BELOW. THIS CERTIFICATE OF INSURANCE DOES NOT CONSTITUTE A CONTRACT BETWEEN THE ISSUING INSURER(S), AUTHORIZED REPRESENTATIVE OR PRODUCER, AND THE CERTIFICATE HOLDER.

IMPORTANT: If the certificate holder is an ADDITIONAL INSURED, the policy(ies) must have ADDITIONAL INSURED provisions or be endorsed. If SUBROGATION IS WAIVED, subject to the terms and conditions of the policy, certain policies may require an endorsement. A statement on this certificate does not confer any rights to the certificate holder in lieu of such endorsement(s).

PRODUCER
USI Insurance Services, LLC
2502 N Rocky Point Drive
Suite 400
Tampa, FL 33607

CONTACT NAME: Debra Parra
PHONE (A/C, No, Ext): 813 321-7500 **FAX (A/C, No):** 813 321-7525
E-MAIL ADDRESS: debra.parra@usi.com

INSURER(S) AFFORDING COVERAGE	NAIC #
INSURER A : Great Northern Insurance Company	20303
INSURER B : Federal Insurance Company	20281
INSURER C : Chubb Indemnity Insurance Company	12777
INSURER D : Great American Insurance Company	16691
INSURER E :	
INSURER F :	

INSURED
Paymentus Corporation
18390 NE 68th Street
Redmond, WA 98052

COVERAGES **CERTIFICATE NUMBER:** **REVISION NUMBER:**

THIS IS TO CERTIFY THAT THE POLICIES OF INSURANCE LISTED BELOW HAVE BEEN ISSUED TO THE INSURED NAMED ABOVE FOR THE POLICY PERIOD INDICATED. NOTWITHSTANDING ANY REQUIREMENT, TERM OR CONDITION OF ANY CONTRACT OR OTHER DOCUMENT WITH RESPECT TO WHICH THIS CERTIFICATE MAY BE ISSUED OR MAY PERTAIN, THE INSURANCE AFFORDED BY THE POLICIES DESCRIBED HEREIN IS SUBJECT TO ALL THE TERMS, EXCLUSIONS AND CONDITIONS OF SUCH POLICIES. LIMITS SHOWN MAY HAVE BEEN REDUCED BY PAID CLAIMS.

INSR LTR	TYPE OF INSURANCE	ADDL INSR	SUBR WVD	POLICY NUMBER	POLICY EFF (MM/DD/YYYY)	POLICY EXP (MM/DD/YYYY)	LIMITS	
A	X COMMERCIAL GENERAL LIABILITY			36069362	08/09/2022	08/09/2023	EACH OCCURRENCE	$1,000,000
	CLAIMS-MADE X OCCUR						DAMAGE TO RENTED PREMISES (Ea occurrence)	$1,000,000
							MED EXP (Any one person)	$15,000
							PERSONAL & ADV INJURY	$1,000,000
	GEN'L AGGREGATE LIMIT APPLIES PER:						GENERAL AGGREGATE	$2,000,000
	POLICY X PRO-JECT LOC						PRODUCTS - COMP/OP AGG	$2,000,000
	OTHER:							$
A	AUTOMOBILE LIABILITY			73623356	08/09/2022	08/09/2023	COMBINED SINGLE LIMIT (Ea accident)	$1,000,000
	X ANY AUTO						BODILY INJURY (Per person)	$
	OWNED AUTOS ONLY / SCHEDULED AUTOS						BODILY INJURY (Per accident)	$
	X HIRED AUTOS ONLY / X NON-OWNED AUTOS ONLY						PROPERTY DAMAGE (Per accident)	$
								$
B	X UMBRELLA LIAB X OCCUR			78194620	08/09/2022	08/09/2023	EACH OCCURRENCE	$25,000,000
	EXCESS LIAB CLAIMS-MADE						AGGREGATE	$25,000,000
	DED RETENTION $							$
C	WORKERS COMPENSATION AND EMPLOYERS' LIABILITY Y / N			71832927	08/09/2022	08/09/2023	X PER STATUTE OTH-ER	
	ANY PROPRIETOR/PARTNER/EXECUTIVE OFFICER/MEMBER EXCLUDED? N / A						E.L. EACH ACCIDENT	$1,000,000
	(Mandatory in NH)						E.L. DISEASE - EA EMPLOYEE	$1,000,000
	If yes, describe under DESCRIPTION OF OPERATIONS below						E.L. DISEASE - POLICY LIMIT	$1,000,000
B	Crime			82622249	08/09/2022	08/09/2023	$10,000,000*	
D	Excess Crime			SAAE6066710200	08/09/2022	08/09/2023	$20,000,000*	

DESCRIPTION OF OPERATIONS / LOCATIONS / VEHICLES (ACORD 101, Additional Remarks Schedule, may be attached if more space is required)

Primary Crime Coverage:
Carrier: Federal Insurance Company
Policy #8262-2249
Effective: 8/09/2022 - 8/09/2023
Employee Theft - $10,000,000 Limit / $100,000 Retention
(See Attached Descriptions)

CERTIFICATE HOLDER

City of Santa Fe (NM)
200 Lincoln Ave.
Santa Fe, NM 87504

CANCELLATION

SHOULD ANY OF THE ABOVE DESCRIBED POLICIES BE CANCELLED BEFORE THE EXPIRATION DATE THEREOF, NOTICE WILL BE DELIVERED IN ACCORDANCE WITH THE POLICY PROVISIONS.

AUTHORIZED REPRESENTATIVE

© 1988-2015 ACORD CORPORATION. All rights reserved.

DESCRIPTIONS (Continued from Page 1)

Premises - $10,000,000 Limit / $100,000 Retention
In Transit - $10,000,000 Limit / $100,000 Retention
Forgery - $10,000,000 Limit / $100,000 Retention
Computer Fraud - $10,000,000 Limit / $100,000 Retention
Funds Transfer Fraud - $10,000,000 Limit / $100,000 Retention
Money Orders & Counterfeit Fraud - $10,000,000 Limit / $100,000 Retention
Credit Card Fraud - $10,000,000 Limit / $100,000 Retention
Client - $10,000,000 Limit / $100,000 Retention
Expense - $250,000 Limit / NA
Social Engineering Fraud Coverage - $250,000 Limit / $100,000 Retention

Excess Crime Coverage:
Carrier: Great American Insurance Company
Policy #SAAE6066710200
Effective: 8/09/2022 - 8/09/2023
$20,000,000 excess of $10,000,000
Sub-Limit Social Engineering Fraud: $250,000 excess of $250,000 with $100,000 Retention

Client#: 753617 PAYMENTUS

ACORD™ CERTIFICATE OF LIABILITY INSURANCE

DATE (MM/DD/YYYY) 10/14/2022

THIS CERTIFICATE IS ISSUED AS A MATTER OF INFORMATION ONLY AND CONFERS NO RIGHTS UPON THE CERTIFICATE HOLDER. THIS CERTIFICATE DOES NOT AFFIRMATIVELY OR NEGATIVELY AMEND, EXTEND OR ALTER THE COVERAGE AFFORDED BY THE POLICIES BELOW. THIS CERTIFICATE OF INSURANCE DOES NOT CONSTITUTE A CONTRACT BETWEEN THE ISSUING INSURER(S), AUTHORIZED REPRESENTATIVE OR PRODUCER, AND THE CERTIFICATE HOLDER.

IMPORTANT: If the certificate holder is an ADDITIONAL INSURED, the policy(ies) must have ADDITIONAL INSURED provisions or be endorsed. If SUBROGATION IS WAIVED, subject to the terms and conditions of the policy, certain policies may require an endorsement. A statement on this certificate does not confer any rights to the certificate holder in lieu of such endorsement(s).

PRODUCER	CONTACT NAME: William A. Cilente - For MMA-NE
Marsh & McLennan Agency LLC Park 80 West, Plaza Two 250 Pehle Avenue, Suite 400 Saddle Brook, NJ 07663	PHONE (A/C, No, Ext): 201 845-6600 FAX (A/C, No): E-MAIL ADDRESS: William.Cilente@MarshMMA.com

INSURER(S) AFFORDING COVERAGE	NAIC #
INSURER A : AIG Specialty Insurance Company	26883
INSURER B :	
INSURER C :	
INSURER D :	
INSURER E :	
INSURER F :	

INSURED
Paymentus Holdings, Inc
18390 NE 68th Street
Redmond, WA 98052

COVERAGES **CERTIFICATE NUMBER:** **REVISION NUMBER:**

THIS IS TO CERTIFY THAT THE POLICIES OF INSURANCE LISTED BELOW HAVE BEEN ISSUED TO THE INSURED NAMED ABOVE FOR THE POLICY PERIOD INDICATED. NOTWITHSTANDING ANY REQUIREMENT, TERM OR CONDITION OF ANY CONTRACT OR OTHER DOCUMENT WITH RESPECT TO WHICH THIS CERTIFICATE MAY BE ISSUED OR MAY PERTAIN, THE INSURANCE AFFORDED BY THE POLICIES DESCRIBED HEREIN IS SUBJECT TO ALL THE TERMS, EXCLUSIONS AND CONDITIONS OF SUCH POLICIES. LIMITS SHOWN MAY HAVE BEEN REDUCED BY PAID CLAIMS.

INSR LTR	TYPE OF INSURANCE	ADDL INSR	SUBR WVD	POLICY NUMBER	POLICY EFF (MM/DD/YYYY)	POLICY EXP (MM/DD/YYYY)	LIMITS	
	COMMERCIAL GENERAL LIABILITY						EACH OCCURRENCE	$
	CLAIMS-MADE OCCUR						DAMAGE TO RENTED PREMISES (Ea occurrence)	$
							MED EXP (Any one person)	$
							PERSONAL & ADV INJURY	$
	GEN'L AGGREGATE LIMIT APPLIES PER:						GENERAL AGGREGATE	$
	POLICY PRO-JECT LOC						PRODUCTS - COMP/OP AGG	$
	OTHER:							$
	AUTOMOBILE LIABILITY						COMBINED SINGLE LIMIT (Ea accident)	$
	ANY AUTO						BODILY INJURY (Per person)	$
	OWNED AUTOS ONLY / SCHEDULED AUTOS						BODILY INJURY (Per accident)	$
	HIRED AUTOS ONLY / NON-OWNED AUTOS ONLY						PROPERTY DAMAGE (Per accident)	$
								$
	UMBRELLA LIAB OCCUR						EACH OCCURRENCE	$
	EXCESS LIAB CLAIMS-MADE						AGGREGATE	$
	DED RETENTION $							$
	WORKERS COMPENSATION AND EMPLOYERS' LIABILITY Y / N						PER STATUTE OTH-ER	
	ANY PROPRIETOR/PARTNER/EXECUTIVE OFFICER/MEMBER EXCLUDED?	N / A					E.L. EACH ACCIDENT	$
	(Mandatory in NH) If yes, describe under DESCRIPTION OF OPERATIONS below						E.L. DISEASE - EA EMPLOYEE	$
							E.L. DISEASE - POLICY LIMIT	$
A	Professional and Cyber Liability Tech E&O			014508765	08/09/2022	08/09/2023	$10,000,000	

DESCRIPTION OF OPERATIONS / LOCATIONS / VEHICLES (ACORD 101, Additional Remarks Schedule, may be attached if more space is required)

Excess Professional and Cyber/Tech E&O Policies:
Effective Date: 08/09/2022 - 08/09/2023
Policy: #: Various See Below, Limits: Various See Below, Carrier: Various See Below

1st Excess -
(See Attached Descriptions)

CERTIFICATE HOLDER

City of Santa Fe (NM)
200 Lincoln Ave
Santa Fe, NM 87504

CANCELLATION

SHOULD ANY OF THE ABOVE DESCRIBED POLICIES BE CANCELLED BEFORE THE EXPIRATION DATE THEREOF, NOTICE WILL BE DELIVERED IN ACCORDANCE WITH THE POLICY PROVISIONS.

AUTHORIZED REPRESENTATIVE

Wm. Ce. Cilente

© 1988-2015 ACORD CORPORATION. All rights reserved.

DESCRIPTIONS (Continued from Page 1)

Carrier: Continental Casualty Company
Policy # 652024674
Limits: $10M xs $10M

2nd Excess -
Carrier: Crum & Forster Specialty Insurance Company
Policy # EOL238128
Limits: $5M po $20M xs $20M

Carrier: Indian Harbor Insurance Company
Policy # MTE004184209
Limits: $5M po $20M xs $20M

Carrier: Starr Surplus Lines Insurance Company
Policy # 1000635302221
Limits: $5M po $20M xs $20M

Carrier: Lloyd's Syn 457 (Munich Re Spec Gr Ltd)
Policy # 01MRCT000015600
Limits: $5M po $20M xs $20M

3rd Excess -
Carrier: Allied World Surplus Lines Ins Co
Policy # 03124681
Limits: $5M xs $40M

4th Excess -
Carrier: Evanston Insurance Company
Policy # MKLV1XEO000350
Limits: $5M xs $45M

5th Excess -
Carrier: Sompo America Insurance Company
Policy # MCX30023773000
Limits: $5M xs $50M

6th Excess -
Carrier: Certain Underwriters at Lloyd's
Policy # B6044000RURS05022
Limits: $5M xs $55M

7th Excess -
Carrier: Hudson Excess Insurance Company
Policy # EEU1265108
Limits: $5M xs $60M

8th Excess -
Carrier: Everest National Insurance Company
Policy # CY5EX00479221
Limits: $2.5M po $5M xs $65M

Carrier: Ascot Specialty Insurance Company
Policy # EOXS221000152801
Limits: $2.5M po $5M xs $65M

Evidence of Insurance

ITEM # 18-0758

Paymentus

AMENDING AGREEMENT

Customer:	City of Santa Fe
Customer Address:	200 Lincoln Ave. Santa Fe, NM 87504
Contact for Notices to Customer:	Caryn Fiorina

This Amending Agreement is entered into as of the below signature date, by and between the Customer ("Customer") identified above and **Paymentus Corporation**, a Delaware Corporation ("Paymentus").

WHEREAS:

A - The parties entered into a Master Services Agreement originally dated March 23, 2017 and Amending Agreements dated October 31, 2017.

B - The parties now wish to amend Schedule A to increase the maximum payment amount from $500.00 to $10,000.00.

NOW, THEREFORE, in consideration of the mutual covenants hereinafter set forth, the receipt and sufficiency of which are hereby acknowledged, the parties, intending to be legally bound, hereby covenant and agree as follows:

Except for Schedule A as provided in this Amending Agreement, all provisions of the Master Service Agreement remain in full force and effect, un-amended.

IN WITNESS WHEREOF, the parties have caused this Agreement to be executed by their duly authorized representatives

Customer:

By: See attached Signature Page

Name: _____

Title: _____

Date: _____

Paymentus:

By: _____

Name: David Sharpin

Title: SVP

Date: 7/20/18

Schedule A – Paymentus Service Fee Schedule

Paymentus Service Fee charged to the End User will be based on the following table:

Absorbed Fee Model
Residential Utility Payments ☐ Average Bill Amount: $100.00 ☐ Monthly Subscription Fee: $7,000.00 Paymentus Service Fee per qualified utility rate transaction: ☐ Credit/Debit Card $0(Visa®, MasterCard®, Discover® Discount Utility Rate Program) ☐ Ach/e-Check $0 Paymentus Service Fee per Non-qualified transactions (Non-qualified transactions applies to any transaction that does not qualify for a utility rate transaction. This may include a Business or Corporate card transactions). ☐ Credit/Debit Card $0(Visa®, MasterCard®, Discover® Discount Utility Rate Program) ☐ Ach/e-Check $0

Note: Maximum payment amount for Utility payments will be set at $10,000.00 per transaction, with a minimum of $5. A chargeback of $9.95 on e-checks only applies per chargeback.

Paymentus may apply different limits per transactions for user adoption or to mitigate risks.

Monthly subscription fee of $7,000.00 includes unlimited e-checks transactions.

The merchant agreement with Paymentus and Chase will be utilized for e-check transactions only, as First Data/Wells Faro will be providing credit/debit card merchant services. The monthly subscriptions fee is for the use of the Paymentus platform technology. At any time, the City may choose to revert back to the original pricing of per transaction using chase merchant services.

Paymentus Amending Agreement

CITY OF SANTA FE:

ALAN WEBBER, MAYOR

DATE: 7/5/18

ATTEST:

YOLANDA Y. VIGIL, CITY CLERK
CC mtg. 6/27/18

APPROVED AS TO FORM:

5/17
GENO ZAMORA, INTERIM CITY ATTORNEY

APPROVED:

7-3-18
INTERIM FINANCE DIRECTOR
Brad Fluetsch

Business Unit/Line Item

Paymentus

AMENDING AGREEMENT

Customer:	City of Santa Fe
Customer Address:	200 Lincoln Avenue, Santa Fe NM, 87504
Contact for Notices to Customer:	Caryn Fiorina

This Amending Agreement is entered into as of October 18, 2017, by and between the Customer ("Customer") identified above and **Paymentus Corporation**, a Delaware Corporation ("Paymentus").

WHEREAS:

A - The parties entered into a Master Services Agreement dated March 23, 2017

B - The parties now wish to amend the Schedule A of the Master Services Agreement to Paymentus Service Fees.

NOW, THEREFORE, in consideration of the mutual covenants hereinafter set forth, the receipt and sufficiency of which are hereby acknowledged, the parties, intending to be legally bound, hereby covenant and agree as follows:

Schedule A of Master Services Agreement will be amended per Schedule A attached with this Amending Agreement.

Except the Schedule A, as provided in this Amending Agreement, all provisions of the Agreement remain in full force and effect, un-amended.

IN WITNESS WHEREOF, the parties have caused this Agreement to be executed by their duly authorized representatives

Customer:

By: _____

Name: Adam Johnson

Title: Finance Director

Date: 10/27/17

Paymentus:

By: _____

Name: Jerry Portocalis

Title: Senior Vice President

Date: October 31, 2017

Schedule A – Paymentus Service Fee Schedule

Paymentus Service Fee charged to the User will be based on one of the following table:

Absorbed Fee Model	
☐ Residential Utility Average Bill Amount: $100.00	
☐ Monthly Subscription Fee: $7,000.00 Billable upon go live.	
☐ Paymentus Service Fee per qualified utility rate transaction	
• Credit/Debit Card	$ 0 (Visa, MasterCard, Discover, Amex Utility Rate)
• ACH/ eCheck	$ 0
☐ Paymentus Service Fee per Non-qualified transaction (Non-qualified transaction applies to any transaction that does not qualify for a utility rate transaction. This may include a Business or Corporate card transactions).	
• Credit/Debit Card	0% (Visa, MasterCard, Discover, Amex)
• ACH/eCheck	$ 0

Note: A chargeback fee of $9.95 on e-checks only applies per chargeback.

Paymentus may apply different limits per transactions for user adoption or to mitigate risks.

Monthly subscription fee of $7,000.00 includes unlimited e-check transactions.

The merchant agreement with Paymentus and Chase will be utilized for e-check transactions only, as First Data/Wells Fargo will be providing credit/debit card merchant services.
The monthly subscription fee is for the use of the Paymentus platform technology. At any time, the City may choose to revert back to the original pricing of per transaction using Chase merchant services.

Paymentus

MASTER SERVICES AGREEMENT

Client:	Postal Pros delivered to the City of Santa Fe NM
Client Address:	200 Lincoln Avenue, Santa Fe NM, 87504
Contact for Notices to Client:	Caryn Fiorina
Estimated Yearly Bills / Invoices:	408,000

This Master Services Agreement ("Master Agreement") is entered into as of the Effective Date below, by and between the Client ("Client") identified above and **Postal Pros (delivered to the City of Santa Fe, NM)**, and **Paymentus Corporation**, a Delaware Corporation ("Paymentus").

WHEREAS Paymentus desires to provide and the Client desires to receive certain services under the terms and conditions set forth in this Agreement. Paymentus provides electronic bill payment services to utilities, municipalities, insurance and other businesses.

NOW, THEREFORE, in consideration of the mutual covenants hereinafter set forth, the receipt and sufficiency of which are hereby acknowledged, the parties, intending to be legally bound, hereby covenant and agree as follows. This Agreement consists of this signature page, General Terms and Conditions, and the attachments ("**Attachments**") with schedules ("**Schedules**") listed below:

Schedule A: Paymentus Service Fee Schedule
Schedule B: Additional Services

This Agreement represents the entire understanding between the parties hereto with respect to its subject matter and supersedes all other written or oral agreements heretofore made by or on behalf of Paymentus or Client with respect to the subject matter hereof and may be changed only by agreements in writing signed by the authorized representatives of the parties.

IN WITNESS WHEREOF, the parties have caused this Agreement to be executed by their duly authorized representatives.

Client:

By: Eugene Lundell for

Name: Javier M. Gonzales

Title: Mayor

Date: 3-20-17

Paymentus:

By:

Name: JERRY PORTOCALIS

Title: SVP

Date: 3-14-17

City:

By: _____

Name: _____

Title: _____

Date: _____

City:

By: _____

Name: _____

Title: _____

Date: _____

City:

By: _____

Name: _____

Title: _____

Date: _____

City:

By: _____

Name: _____

Title: _____

Date: _____

GENERAL TERMS AND CONDITIONS

1 Definitions:

For the purposes of this Agreement, the following terms and words shall have the meaning ascribed to them, unless the context clearly indicates otherwise.

1.1 **"Agreement** "or **"Contract"** shall refer to this Agreement, as amended from time to time, which shall constitute an authorization for the term of this contract for Paymentus to be the exclusive provider of services, stated herein, to the Client

1.2 **"User"** shall mean the users of the Client's services

1.3 **"Effective Date"** shall be the last date upon which the parties signed this Agreement. The Agreement will not be effective against any party until the said date

1.4 **"Launch Date"** shall be the date on which Client launches this service to the Users

1.5 **"Payment"** shall mean Users to make payments for Client's services or Client's bills

1.6 **"Payment Amount"** shall mean the bill amount User wants to pay to the Client.

1.7 **"Non-consumer Cards"** shall mean credit cards which are issued for business use. These high-cost cards may include corporate cards, purchase cards, business cards, travel and entertainment cards.

1.8 **"Services"** shall include the performance of the Services outlined in section 2 of this Agreement

1.9 **"Paymentus Authorized Processor"** shall mean a Paymentus authorized merchant account provider and payment processing gateway

1.10 **"Average Bill Amount"** shall mean the total amount of Payments collected through Paymentus system in a given month divided by the number of the Payments for the same month.

2 Description of Services to be performed

2.1 Scope of Services

Paymentus shall provide Users the opportunity to make Payments by Visa, MasterCard, Discover, E-check and other payment methods as deemed necessary by Paymentus. Payments may be made by Interactive Telephone Voice Response System ("IVR") or secure Internet interface provided at the Paymentus Corporation's web site or other websites part of Paymentus' Instant Payment Network ("WebSites"), collectively referred to as the ("System" or "Platform").

2.2 Professionalism

Paymentus shall perform in a professional manner all Services required to be performed under this Agreement.

3 Compensation

3.1 No Cost Installation

Paymentus will charge no fees related to the initial setup and personalization of its standard service for both Web and IVR interfaces.

3.2 Paymentus Service Fee

For each payment, Paymentus will charge a Paymentus Service Fee as per Schedule A (hereinafter called "Paymentus Service Fee").

For each payment, the Paymentus Service Fee collected will be used to pay the corresponding Credit Card transaction fees or transaction fees associated with Debit Cards or eChecks (hereinafter called "Transaction Fees") except for the return items (eCheck returns or Credit/Debit Card chargebacks).

A schedule of Paymentus Service Fee is attached hereto as Schedule A. The Paymentus Service Fee is based on the Average Bill Amount, current payment method mix (credit vs debit vs e-check) and on the assumption that the total number of payments and the total Payment Amount collected each month from the use of non-consumer cards shall be under 5% of the total per month ("Fee Assumptions"). Client shall be billed an additional Paymentus Service Fees based on the rate of 3.5% of the Payment Amount for any excess amount if the Fee Assumptions vary by more than 5%. Paymentus

can amend this schedule upon prior written notice to the Client, if such change is required due to changes in the Visa and MasterCard regulations or changes in Credit Card fees or changes in the Average Bill Amount or changes in Fee Assumptions.

4 Payment Processing

4.1 Integration with Client's Billing System

At no cost to Client, Paymentus will develop one (1) file format interface with Client's billing system using Client's existing text file format currently used to post payments to Client's billing system. Client will be responsible to provide Paymentus with the one file format specification and will fully cooperate with Paymentus during the development of the said interface. If Client chooses to create an automated file integration process to download the posting file, due to Paymentus security requirements, Client will use Paymentus specified integration process. Paymentus platform is an independent full service fully hosted platform per PCI-DSS requirements for a fully hosted solution. As such, Paymentus platform does and can function independent of any billing system integration. A payment posting file can be emailed or downloaded from Paymentus Agent Dashboard. If Client chooses to have Paymentus platform integrated with its billing system, Paymentus offers two options:

(i) Paymentus standard integration specification that Client can use to integrate its billing systems with Paymentus platform ("Standard Integration"); (or)

(ii) Paymentus to either customize or configure its platform to integrate with Client using file specification or APIs supported by Client's billing system ("Client Specific Integration")

If Client chooses Standard Integration, Paymentus agrees to fully cooperate with Client and provide its specification to Client. Paymentus also agrees to participate in meetings with Client's software vendor to provide any information or clarifications needed to understand Standard Integration. Time is of the essence and Paymentus agrees to provide all integration/interface specifications within 30 days from the Effective Date. Client will take commercially reasonable steps to develop the integration within 60 days from the date on which Client has received all integration specifications from Paymentus. Parties agree that if Paymentus does not cooperate fully, it can lead to Client being unable to perform its duties to deliver the integration in time.

If Client chooses Client Specific Integration, Paymentus agrees to develop such integration at no cost to Client, provided however, Client agrees to fully cooperate with Paymentus and cause its software vendors to fully cooperate with Paymentus. Client agrees to provide all specification required for Client specific integration. Client further agrees to participate in testing with Paymentus and if needed, cause its billing software vendors to participate in testing. Time is of the essence and Client agrees to provide or make available all integration/interface specifications within 30 days from the Effective Date. Paymentus will take commercially reasonable steps to develop the integration within 60 days from the date on which Paymentus has received all the integration specifications from Client or its vendors. Parties agree that if Client does not cooperate fully or is unable to cause its software vendors to cooperate fully with Paymentus, it can lead to Paymentus being unable to perform its duties to deliver the integration in time.

Based on Client's use of Paymentus platform and respective modules selected under this Agreement, Paymentus will require the following integration points:

(i) For one-time Payment Module:
   a. Customer Information – Text File or Real-time
   b. Payment Posting – Text File or Real-time
(ii) For Recurring Payment Module
   a. Text File
(iii) For E-billing Module
   a. Billing Data - Text File or Real-time link to billing data
(iv) For Outbound Notification
   a. Audience File – Text File for customer engagement messages

Each of these can be based on Standard Integration or Client Specific Integration.

4.2 PCI Compliance

For PCI Compliance, Client has two options for using Paymentus platform:

(i) Paymentus Fully Hosted Solution; or
(ii) Any other configuration

To substantially reduce or eliminate any PCI compliance risks and to render all Client systems out of scope from PCI compliance requirements, Client agrees to use Paymentus' fully hosted service where Paymentus uses its own platform to capture

Payments and to manage the entire (end to end) user experience from all channels for Payment acceptance: Web, Mobile, IVR, POS devices (per Paymentus recommended setup), recurring payments, Ebill Presentment ("Paymentus Fully Hosted Solution"). If Client chooses any other integration such as third party web pages integrated with Paymentus APIs, third party gateway pages, or its own IVR systems or POS solution not recommended by Paymentus, or a cashiering module from third party, Client expressly agrees that Client shall not be exempt from PCI requirements and shall be liable for any data breaches occurring on its own systems as Client's recognizes that Client systems are participating in the transactions and are in scope for PCI compliance. Under such circumstances, Paymentus shall not be responsible for any PCI obligations outside of Paymentus own platform and Paymentus expressly disclaims any PCI or security obligations related to Client systems or any third party systems that participate in the payment transactions that are outside of Paymentus Platform.

Paymentus highly recommends that Client uses Paymentus Fully Hosted Solution to substantially reduce its PCI compliance and data breach risks.

If Client chooses to use any other option other than Paymentus Fully Hosted Solution, Client agrees and warrants that Client shall remain PCI compliant throughout the term of this Agreement. For clarity, just because Client uses PCI compliant applications such as its billing software, it does not eliminate the need for Client to be PCI compliant. Per PCI requirements, if a party's systems participate in processing, or accepting or storing card transactions, such party is required to be PCI compliant as the systems are in scope.

4.3 Explicit User Confirmation

Paymentus shall confirm the dollar amount of all Payments to be charged to a Card and electronically obtain the User approval of such charges prior to initiating Card authorizations transaction. Paymentus will provide User with electronic confirmation of all transactions.

4.4 Merchant Account

Paymentus will arrange for the Client to have a merchant account with the Paymentus Authorized Processor for processing and settlement of the credit card transactions.

4.5 Card Authorization

For authorization purposes, Paymentus will electronically transmit all Card transactions to the appropriate card associations in real time as the transactions occur.

4.6 Settlement

Paymentus together with its authorized Card processor shall forward the payment transactions to the appropriate card organizations for settlement directly to the Client's depository bank account previously designated by the Client (hereinafter the "Client Bank Account").

Paymentus will debit the Paymentus Service Fees from Client's account on a monthly basis.
Paymentus together with Paymentus Authorized Processor will continuously review its settlement and direct debit processes for its simplicity and efficiencies. Client and Paymentus agree to fully co-operate with each other if Paymentus were to change its settlement and invoicing processes.

5 General Conditions of Services

5.1 Service Reports

Paymentus shall provide Client with reports summarizing use of the Services by Users for a given reporting period.

5.2 User Adoption Communication by Client

Client will make Paymentus' Services available to its residential and commercial Clients by different means of Client communication including a) through bills, invoices and other notices; b) by providing IVR and Web payment details on the Client's website including a "Pay Now" or similar link on a mutually agreed prominent place on the web site; c) through Client's general IVR/Phone system; and d) other channels deemed appropriate by the Client.

Paymentus shall provide Client with logos, graphics and other marketing materials for Client's use in its communications with its users regarding the Services and/or Paymentus.

Both parties agree that Paymentus will be presented as a payment method option. Client will communicate Paymentus option to its end residential and commercial Clients wherever Client usually communicates its other payment methods.

5.3 Independent Contractor

Client and Paymentus agree and understand that the relationship between both parties is that of an independent contractor.

5.4 Client's Responsibilities

In order for Paymentus to provide Services outlined in this Agreement, the Client shall co-operate with Paymentus by:

(i) Client will enter into all applicable merchant Card or cash management agreements.

(ii) For the duration of this Agreement, Client will keep a bill payment link connecting to Paymentus System at a prominent and mutually agreed location on the Client website. The phone number for the IVR payment will also be added to the web site. Client will also add the IVR payment option as part of the Client's general phone system.

(iii) User Adoption marketing as described in 5.2.

(iv) Within 30 days of the merchant account setup, Client will launch the service to the Users.

(v) For the purpose of providing Client a posting file for posting to Client's billing system, Client will provide the file format specification currently used to post its payments to the billing system. Client will fully cooperate with Paymentus and provide the information required to integrate with Client's billing system.

6 Governing Laws

This Agreement shall be governed by the laws of the state of New Mexico.

7 Communications

7.1 Authorized Representative

Each party shall designate an individual to act as a representative for the respective party, with the authority to transmit instructions and receive information. The parties may from time to time designate other individuals or change the individuals.

7.2 Notices

All notices of any type hereunder shall be in writing and shall be given by Certified Mail or by a national courier or by hand delivery to an individual authorized to receive mail for the below listed individuals, all to the following individuals at the following locations:

To Client City of Santa Fe
C/O: Donald Martinez
Address: 801 San Mateo, Santa Fe, NM 87505
Email: dwmartinez@santafenm.gov

To Paymentus
C/O: President and CEO
Address: 13024 Ballantyne Corporate Place
Suite 450
Charlotte, NC 28277
Email: ceo@paymentus.com

Notices shall be declared to have been given or received on the date the notice is physically received if given by hand delivery, or if notices given by US Post, then notice shall be deemed to have been given upon on date said notice was deposited in the mail addressed in the manner set forth above. Any party hereto by giving notice in the manner set forth herein may unilaterally change the name of the person to whom notice is to be given or the address at which the notice is to be received.

7.3 Interpretation

It is the intent of the parties that no portion of this Agreement shall be interpreted more harshly against either of the parties as the drafter.

7.4 Amendment of Agreement

Modifications or changes in this Agreement must be in writing and executed by the parties bound to this Agreement.

7.5 Severability

If a word, sentence or paragraph herein shall be declared illegal, unenforceable, or unconstitutional, the said word, sentence or paragraph shall be severed from this Agreement, and this Agreement shall be read as if said word, sentence or paragraph did not exist.

7.6 Attorney's Fees

Should any litigation arise concerning this Agreement between the parties hereto, the parties agree to bear their own costs and attorney's fees.

7.7 Confidentiality

Client will not disclose to any third party or use for any purpose inconsistent with this Agreement any confidential or proprietary non-public information it obtains during the term of this Agreement about Paymentus' business, operations, financial condition, technology, systems, no-how, products, services, suppliers, Clients, marketing data, plans, and models, and personnel. Paymentus will not disclose to any third party or use for any purpose inconsistent with this Agreement any confidential User information it receives in connection with its performance of the services.

7.8 Intellectual Property

In order that the Client may promote the Services and Paymentus' role in providing the Services, Paymentus grants to Client a revocable, non-exclusive, royalty-free, license to use Paymentus' logo and other service marks (the "Paymentus Marks") for such purpose only. Client does not have any right, title, license or interest, express or implied in and to any object code, software, hardware, trademarks, service mark, trade name, formula, system, know-how, telephone number, telephone line, domain name, URL, copyright image, text, script (including, without limitation, any script used by Paymentus on the IVR or the WebSite) or other intellectual property right of Paymentus ("Paymentus Intellectual Property"). All Paymentus Marks, Paymentus Intellectual Property, and the System and all rights therein (other than rights expressly granted herein) and goodwill pertain thereto belong exclusively to Paymentus.

7.9 Force Majeure

Paymentus will be excused from performing the Services as contemplated by this Agreement to the extent its performance is delayed, impaired or rendered impossible by acts of God or other events that are beyond Paymentus' reasonable control and without its fault or judgment, including without limitation, natural disasters, war, terrorist acts, riots, acts of a governmental entity (in a sovereign or contractual capacity), fire, storms, quarantine restrictions, floods, explosions, labor strikes, labor walk-outs, extra-ordinary losses utilities (including telecommunications services), external computer "hacker" attacks, and/or delays of common carrier.

7.10 Time of the Essence

Paymentus and Client acknowledge and agree that time is of the essence for the completion of the Services to be performed and each parties respective obligations under this Agreement.

8 Indemnification

8.1 Paymentus Indemnification and Hold Harmless

Paymentus agrees to the fullest extent permitted by law, to indemnify and hold harmless the Client and its governing officials, agents, employees, and attorneys (collectively, the "Client Indemnitees") from and against all liabilities, demands, losses, damages, costs or expenses (including reasonable attorney's fees and costs), incurred by any Client Indemnitee as a result or arising out of (i) the willful misconduct or negligence of Paymentus in performing the Services or (ii) a material breach by Paymentus of its covenants.

8.2 Warranty Disclaimer

Except as expressly set forth in this Agreement, Paymentus disclaims all other representations or warranties, express or implied, made to the Client or any other person, including without limitation, any warranties regarding quality, suitability, merchantability, fitness, for a particular purpose or otherwise of any services or any good provided incidental to the Services provided under this Agreement.

8.3 Limitation of Liability

Notwithstanding the foregoing, the parties agree that neither party shall be liable to the other for any lost profits, lost savings or other special, indirect or consequential damages, even if the party has been advised of or could have foreseen the possibility of such damages. Paymentus' total liability for damages for any and all actions associated with this Agreement or the Services shall in no event exceed the specific dollar amount of the Paymentus Service Fee paid to Paymentus for the particular payment transaction which is the subject matter of the claim of damage.

9 Term and Termination

9.1 Term

The term of this Agreement shall commence on the effective date of this Agreement and continue for a period of 4 (four) years ("Initial Term") from the Launch Date. Services under this Agreement shall begin within 30 days of the merchant account setup.

At the end of the Initial Term, this Agreement will automatically renew for successive three (3) year periods unless either Client or Paymentus provide the other party with not less than 6 (six) months prior written notice before such automatic renewal date that such party elects not to automatically renew the term of this Agreement.

9.2 Material Breach

A material breach of this Agreement shall be cured within 90 (ninety) days ("Cure Period") after a party notifies the other of such breach. In the event, such material breach has not been cured within the Cure Period, the non-breaching party can terminate this Agreement by providing the other party with a 30 (thirty) days' notice.

9.3 Upon Termination

Upon termination of this Agreement, the parties agree to cooperate with one another to ensure that all Payments are accounted for and all refundable transactions have been completed. Upon termination, Paymentus shall cease all Services being provided hereunder unless otherwise directed by the Client in writing.

Paymentus

Schedule A – Paymentus Service Fee Schedule

Paymentus Service Fee charged to the Client will be based on the following model:

Absorbed Fee Model
☐ Residential Utility Average Bill Amount: $100.00
☑ Paymentus Service Fee per qualified utility rate transaction • Credit/Debit Card $ 1.73 (Visa, MasterCard, Discover, Amex Utility Rate) • ACH/ eCheck $ 0.40 Maximum Amount per Qualified payment is $500.00. Multiple payments can be made only at the counter.
☐ Paymentus Service Fee per Non-qualified transaction (Non-qualified transaction applies to any transaction that does not qualify for a utility rate transaction. This may include a Business or Corporate card transactions). • Credit/Debit Card 2.65% (Visa, MasterCard, Discover, Amex) • ACH/eCheck $ 0.40

Note: A chargeback fee of $9.95 applies per chargeback.

Paymentus may apply different limits per transactions for user adoption or to mitigate risks.

Paymentus

Schedule B: Additional Services

Service Type 1	Paymentus Service Fee
E-Bill Presentment	12 months bill history data no charge File creation set up fee waived

Accept Service 1 ☑ Initial lp

Service Type 2	Paymentus Service Fee
Outbound Notification Messages	2,000 Monthly IVR/SMS Text/Email Messages No Charge 2,001+ Messages Overage Fee: $0.15 per IVR/SMS message $0.05 per Email message Unlimited Inbound IVR Payment Minutes

Accept Service 2 ☑ Initial lp

Service Type 3	Paymentus Service Fee
Mobile Payment Platform	No Setup fee Transaction fees as outlined in Schedule A

Accept Service 3 ☑ Initial lp

Paymentus

Service Type 4	Paymentus Service Fee
Enterprise Payment Aggregator (Online Banking/E-Lockbox)	$0.09 per Transaction

Accept Service 4 ☐ Initial ____

Customer:

By: _____

Name: _____

Title: _____

Date: _____

Paymentus:

By: _____

Name: JERRY PORTOCALIS

Title: SVP

Date: 3-14-17

Unit Cost Year One Through Four***

ITEM	PRICE	NOTES
Development/Testing	No Charge	For custom overlay design, format, file conversions and Admin Website for reporting, import files and custom search for PDF statement images. Price is valid through December 2016
Total cost per single sheet, duplex page bill	$.139	Processing, duplex laser imaging, Paper 24# 8.5*14 or 8.5*11 single horizontal perforation, #10 envelope, #9 envelope, and insertions.
Additional pages	$0.08	
15 Day Notices	$0.12	Processing, simplex laser imaging, Paper 24# 8.5 x 11 single horizontal perforation, #10 envelope, and insertions.

Online Services

Setup and Testing	$375.00	Set up cost for url link to EStatement sign up and view bills.
Statements Archival, Search and View	$0.01	PDF images of statements archive history up to 24 months searchable by name, address, billing date, name, account No., & service No. Statements may be viewed, downloaded, saved, emailed or printed.
EStatement processing for enrolled customers	$0.15	Per generated Estatement/Mo. We will set up a data base of all customers signed up to receive E Statements, pull the print file so that no paper statement is mailed and attach any "inserts" PDF images to the statement image so that all customers receive special notices.

*****PPSW BASE PRICE IS GUARANTEED FOR FOUR (4) YEARS*****

Postage	Automated Rates	
First Class Postage 2 oz. rates as of 4/10/2016. All USPS published postal rate increases will be passed through to the City at cost.	5 Digit - $0.376 3 Digit - $0.399 AADC - $0.399 Mixed - $0.419 Machine Presort - $0.452 Full Rate - $0.47	We do not mark up postage
Presorting Fee	No Charge	
NCOALink Processing	No Charge	
Manuals, 7 pages or more	Manual Files over 7 pages - $0.20 6 x 9 double wdo - $0.16 9 x 12 single wdo - $0.30	Special handling and manual inserting into either 6 x 9 or "flat" 7 to 15 pages depending on additional inserts including # 9 return. Over 15 pages, including # 9 return billed at actual cost.
Secure FTP	No Charge	
Processing Reports	No Charge	
Software enhancements	$125 per hour	
IT Programming Fees	$125 per hour	No charge for implementation
Documents Design	$125 per hour	We do not charge for minor "everyday changes". We do charge to design new templates after the initial set up.
Additional inserts	$0.00 each	No charge for insertion of additional materials.
Custom printing of billing inserts		Quotes based upon the jobs specifications.

Signature: Nancy L. Jimenez
Nancy L. Jimenez (Oct 12, 2022 11:53 MDT)

Email: nljimenez@ci.santa-fe.nm.us

Signature:
Shannon Jones (Oct 13, 2022 10:06 MDT)

Email: swjones@santafenm.gov

Signature: Nancy L. Jimenez
Nancy L. Jimenez (Dec 16, 2025 12:15:00 MST)

Email: nljimenez@santafenm.gov

Signature:

Email: jdroach@santafenm.gov

Paymentus_Corp._Amendment_No

Final Audit Report 2025-12-23

Created:	2025-12-19
By:	RACHEL GABALDON (rdgabaldon@santafenm.gov)
Status:	Canceled / Declined
Transaction ID:	CBJCHBCAABAADOADu45_wbKb23r7aXYi8njLZA4uymHZ

"Paymentus_Corp._Amendment_No" History

Document created by RACHEL GABALDON (rdgabaldon@santafenm.gov)
2025-12-19 - 6:52:10 PM GMT- IP address: 63.232.20.2

Document emailed to ajhopkins@santafenm.gov ajhopkins@santafenm.gov (ajhopkins@santafenm.gov) for signature
2025-12-19 - 7:02:38 PM GMT

Email viewed by ajhopkins@santafenm.gov ajhopkins@santafenm.gov (ajhopkins@santafenm.gov)
2025-12-19 - 7:06:45 PM GMT- IP address: 104.47.64.254

Document e-signed by ajhopkins@santafenm.gov ajhopkins@santafenm.gov (ajhopkins@santafenm.gov)
Signature Date: 2025-12-19 - 7:07:16 PM GMT - Time Source: server- IP address: 63.232.20.2

Document sent to JoAnn Lovato (jdlovato@santafenm.gov) and Travis Dutton-Leyda (tkduttonleyda@santafenm.gov) for signature. One of them to sign
2025-12-19 - 7:07:22 PM GMT

Email viewed by Travis Dutton-Leyda (tkduttonleyda@santafenm.gov)
2025-12-19 - 8:16:32 PM GMT- IP address: 63.232.20.2

Email viewed by Travis Dutton-Leyda (tkduttonleyda@santafenm.gov)
2025-12-22 - 5:20:51 AM GMT- IP address: 146.75.203.1

Email viewed by JoAnn Lovato (jdlovato@santafenm.gov)
2025-12-22 - 8:42:06 PM GMT- IP address: 63.232.20.2

Email viewed by Travis Dutton-Leyda (tkduttonleyda@santafenm.gov)
2025-12-23 - 7:12:32 PM GMT- IP address: 62.10.205.21

Email viewed by JoAnn Lovato (jdlovato@santafenm.gov)
2025-12-23 - 10:34:37 PM GMT- IP address: 63.232.20.2

Document declined by JoAnn Lovato (jdlovato@santafenm.gov)

Decline reason: I don't see where Amendment #5 actually ever extended the agreement to 6/30/26. There are two contradicting supporting documents for Amendment #5. The memo says it is extending to 6/30/2026 and the SOC says it is extending to 6/30/2025. Where is the legal amendment #5 to extend to 2026? Amendment #3 extended to 6/30/25. Amendment #4 changed fees/SOW. Amendment #5 was supposed to also extend term but did not. Therefore, this agreement is expired.

2025-12-23 - 10:46:35 PM GMT- IP address: 63.232.20.2

CITY OF SANTA FE

The Purchasing Memo

Date: January 6, 2026

To: Governing Body and Public Works & Utilities Committee

From: Michael Dozier, Wastewater Management Division Director

Subject: Amendment to Professional Services Contract for Aquasight, LLC.

Vendor Name: Aquasight, LLC.

Munis Vendor Number: 10422

Wastewater Management Division respectfully requests your review and approval of an Amendment 1 to contract number 3250176 with Aquasight, LLC for data analysis to the Paseo Real Wastewater Treatment Facility (PRWRF). No increase in compensation or term. There is only a change to the scope of work.

ITEM AND ISSUE:

The city received a referenced Administrative Order (AO) on March 6th, 2024 from the U.S. Environmental Protection Agency (EPA) Region 6 and amended July 10, 2024 (CWA-06-2024-1765). This AO requires within 30 days the submission of the comprehensive written plan for the elimination of the violations within the shortest possible time, as well as measures to prevent these or similar violations from recurring. Aquasight is one of the original vendors set up in the plan to provide data analysis to the Paseo Real Wastewater Treatment Facility (PRWRF) to improve ongoing operations. They provided the PRWRF with APOLLO, a digital twin software, that allowed operators to see trends in Supervisory Control and Data Acquisition (SCADA) information, laboratory data and operations logs and make informed decisions for the operation of the PRWRF. This software requires proper connections to specific data streams (Operator 10 Wastewater) from PRWRF equipment to be able to provide the dashboard with useful information.

PRWRF has been having issues (communication fiber and control module installations) getting the Secondary Clarifier system SCADA information connected and shared to the data streams, so on 18 November 2025 the Contractor provided an alternative to the data at no change in the compensation. The alternative was to change out modules and programming from the Clarifier module to one called AQSYNC. This module for APOLLO will provide our operators with a new product that pairs our data with an artificially intelligent large language model (LLM) that discovers the trends in our data and provides interactive guidance on reasons why the data may look the way it does. This would be an improvement over APOLLO which only displays the data in a dashboard but does not analyze it for us. With the new module, the Contractor will be able to complete our onboarding process and can add the replaced module and other modules at a later time.

CONTRACT NUMBER:

The Fiscal Year 2024 Munis contract number is 3250176.

BACKGROUND AND SUMMARY:

On 4 November 2024, the contract was completed with the vendor. On 6 December 2024, a purchase order (FY25-22503195) was placed for the software and to set up onboarding. On 5 September 2025 a carry-over PO (FY26 – 22603048) was placed to continue, but the contract number was not connected to it. A new carry-over PO (FY26 - 22603539) has been placed to correct this issue and will get a change order to add gross receipts tax.

PRIOR APPROVALS AND SUPPORTING INFORMATION:

FUNDING SOURCE:

Fund Name/Number: WW Management 500

Munis Org Name/Number: WW Capital Projects-5000375

Munis Object Name/Number: WIP Const/572970

Budget Officer / Designee: Andy Hopkins **Date:** 01/08/2026

Budget Officer Comment/Exceptions: _____

PROCUREMENT METHOD:

The procurement method used was NMSA 1978, Section 13-1-127, Emergency

The Paseo Real Water Reclamation Facility executed the Emergency Determination (Munis Procurement Number 40-M0087-24-EM030) on 4 April 2024 signed by Travis Dutton-Leyda.

Chief Procurement Officer (CPO)/Designee: _____ **Date:** 01/09/2026

CPO Comment/Exceptions: _____

ASSOCIATED APPROVALS:

IT Components included? ☐ **Yes |** ☒ **No** – On the original YES, but there is no change for amendment.

Approval: _____ **Title:** _____ **Date:** _____

Comment/Exceptions: _____

Treasury/Point of Sale Components included? ☐ **Yes |** ☒ **No**

Approval: _____ **Title:** _____ **Date:** _____

Comment/Exceptions: _____

Vehicles included? ☐ **Yes |** ☒ **No**

Approval: _____ **Title:** _____ **Date:** _____

Comment/Exceptions: _____

Construction to City Facilities, Furniture, and/or Fixtures included? ☐ **Yes |** ☒ **No**

Approval: _____ **Title:** _____ **Date:** _____

Comment/Exceptions: _____

Is this an externally funded purchase? ☐ Yes | ☒ No

If yes, what is the issuing agency: _____

Approval: _____ Title: _____ Date: _____

Comment/Exceptions: _____

Is this a Capital Asset or Project? ☐ Yes | ☒ No

Project Ledger Number: _____

Approval: _____ Title: _____ Date: _____

Comment/Exceptions: _____

ATTACHMENTS:

Amended Aquasight Professional Services Contract
Amended Aquasight Proposal - Exhibit B
Updated Certificate of Liability Insurance (COI) – 10 December 2026

If Amendment:

Original contract packet – 24-0643 Aquasight LLC Final
- Original Emergency Determination Form – 4 April 2024
- USEPA Findings of Violation and Compliance Order CWA-06-2024-1745
- Original Vendors
- Aquasight Proposal Letter – 19 March 2024
- Original Aquasight Purchase Memo – 8 October 2024
- Original Aquasight Professional Services Contract 3204657 – 4 November 2024
- Official Original Aquasight Proposal – Exhibit A
- Original Horizons Document
- Original Certificate of Liability Insurance (COI) – 4 September 2024

Item# _____
Munis Contract# 3250176
Original Contract Item#24-0643
SWPA/GSA/Coop/RFP/ITB #: _____

CITY OF SANTA FE AMENDMENT No. 1
TO PROFESSIONAL SERVICES CONTRACT
ITEM# 24-0643

This AMENDMENT No. 1 (the "Amendment") amends the CITY OF SANTA FE PROFESSIONAL SERVICES CONTRACT, dated 4 November 2024 (the "Contract"), between the City of Santa Fe (the "City") and Aquasight, LLC. (the "Contractor"). The date of this Amendment shall be the date when it is executed by the City and the Contractor whichever occurs last.

RECITALS:

A. Under the terms of the Contract, Contractor has agreed to provide operational treatment modeling and simulation tools for the Paseo Real Wastewater Reclamation Facility.

B. Pursuant to Article 14 of the Contract, and for good and valuable consideration, the receipt and sufficiency of which are acknowledged by the parties, the City and the Contractor agree as follows:

1. SCOPE OF SERVICES

Article 1 of the Contract is amended, so that Article 1 reads in its entirety as follows:

The Contractor shall perform all the work required by this contract and any amendments thereof to build upon the improvements initiated by the City in April 2023. The emergency procurement, this request for authorization, and accompanying Budget Adjustment Request (BAR) established by the City respond to the requirement that the City eliminate violations identified by the EPA and NMED within the shortest possible time. These actions by the City, included as part of a comprehensive plan, will demonstrate the City's commitment to complete this project within the shortest possible time in the most efficient way possible.

The Contractor's scope of work includes support to the City for specific comprehensive plan items #6, #7, and #8 as noted below. The City's comprehensive plan focuses on improving current data collection, regulatory compliance, operational knowledge management / transfer, and management practices at the Paseo Real Water Reclamation Facility (PRWRF), combined with selective capital improvements to existing PRWRF facilities.

The City's comprehensive plan is broken down into the following ten (10) steps, of which the Contractor is providing support only for items #6, #7, and #8 (other items noted are by others):

1. Provide sampling and regulatory support to ensure compliance with existing permits.
2. Support the City's external communications and regularly established weekly updates to improve communication with Regulators.
3. Build a comprehensive base of knowledge & management tools / decision trees to guide PRWRF staff in day-to-day operations and management of the facility.
4. Improve PRWRF laboratory practices, data management, workflow, and communications for all testing performed to ensure regulatory compliance and/or support treatment operations.
5. Provide an inventory of all PRWRF instrumentation, calibration practices, data flows, and uses of information currently collected, and rectify gaps to improve process monitoring and control.
6. Develop a model for treatment operations using commercially available software that integrates information available from lab test results and real-time supervisory control and data acquisition (SCADA) data.
7. Develop continuous modeling results incorporated into an advanced SCADA interface at the PRWRF to simulate and help optimize treatment plant operations and management.
8. Develop tools for simulation, testing, and operation of proposed changes to plant operations and enable remote operational support for emergency conditions.
9. Short-term treatment plant improvement projects. Examples of these limited scope projects include installing a new mechanical bar screen already procured by the City, restoring two (2) former traveling bridge filter systems to working condition, or portable container-based sand filtration equipment and related pumping capability.
10. Additional support to complete the items above including process engineering alternatives development and review, project management and scheduling support, construction related support and services, training support, and related items or equipment, as described in the Contract Documents.

The Contractor's scope of work includes support only for plan items #6, #7, and #8 above. Other noted items are not applicable to the Contractor's work nor to this Scope of Work.

The Contractor's Scope of work will incorporate the following general tasks:

The City of Santa Fe Public Utilities Department is implementing a strategic initiative to further improve
treatment plant effluent performance and reduce operating and maintenance costs by leveraging Aquasight's APOLLO^{TM}. The overall goal of this project is to implement a modular real-time advanced analytics and Copilot™ system for liquid unit processes that will support operator success for meeting permit discharge limits and support operational efficiencies for liquid processes that consume the greatest amount of power and chemicals. APOLLO™ will support the City's goals of continuous and measured progress towards the PRWRF optimization goals over time.

In pursuit of this vision, Aquasight's APOLLO^{TM} software is proposed to assist the City of Santa Fe by:

- Providing a one-stop integrated intelligence dashboarding and analysis solution.
- Integrating a copilot system with built in smart advisors.
- Driving energy and chemical savings and enabling fine tuning of control setpoints.
- Improving daily plant workflow and empowering a data driven decision culture.
- Storing operator knowledge to de-risk operator churn and retirements.
- Providing management visibility through remote off-site access.
- Highlighting compliance risks while providing quick access to process data.
- Enabling predictive maintenance of aeration and disinfection equipment.
- Providing robust tools for workforce training on plant performance at various flows and loads.
- Providing quick access of data for planning and engineering teams.
- Including monitoring and notifications on complex parameters.

Generally, the scope of this project includes onboarding the PRWRF to Aquasight's APOLLO™ software equipped with seven (7) modules. The SCOPE OF WORK may change in the future depending on the needs of the plant. The final SOW will be determined in collaboration with the Utility team.

Additionally, Aquasight will review data sources, data completeness, and instrumentation coverage for the PRWRF. We will make recommendations for additional instrumentation as may be necessary to optimize the data rich environment necessary for an optimized process solution. The project goals described above will be completed through the following tasks:

Task 0 – Project Management
Task 1 – Data Polling
Task 2 – Site Visit and Plant Review Including Instrumentation Review and Recommendations
Task 3 – Aeration Onboarding
Task 4 – AQSYNC Data Integration and AI-Driven Guidance Module
Task 5 – UV Disinfection/Chlorination/Dechlorination Onboarding
Task 6 – Default Module Configuration
Task 7 – Training and Adoption

See Exhibit A for details of the Scope of Work

See Exhibit B for details of the amended Scope of Work

3. COMPENSATION.

Article 3, paragraph A of the Contract is amended to increase the amount of compensation by a total of $28,656.25 in gross receipts tax so that Article 3, paragraph A reads in its entirety as follows:

[CONTINUED ON NEXT PAGE]

A. **The City shall pay to the Contractor in full payment for services satisfactorily performed, such compensation not to exceed $378,656.25, including gross receipts tax.** This amount is a maximum and not a guarantee that the work assigned to be performed by Contractor under this Contract shall equal the amount stated herein. The parties do not intend for the Contractor to continue to provide services without compensation when the total compensation amount is reached. Contractor is responsible for notifying the City when the services provided under this Contract reach the total compensation amount. In no event will the Contractor be paid for services provided in excess of the total compensation amount without this Contract being amended in writing prior to those services in excess of the total compensation amount being provided.

4. CONTRACT IN FULL FORCE.

Except as specifically provided in this Amendment, the Contract remains and shall remain in full force and effect, in accordance with its terms.

[REMAINDER OF PAGE INTENTIONALLY LEFT BLANK]
[SIGNATURE PAGE TO FOLLOW]

IN WITNESS WHEREOF, the parties have executed this Amendment No. 1 to the Contract as of the dates set forth below.

CITY OF SANTA FE:

_____

_____,MAYOR

DATE:_____

CONTRACTOR:
AQUASIGHTt, LLC.

Jonathan Hasson
Jonathan Hasson (Dec 15, 2025 09:14:07 CST)

JONATHAN HASSON, VICE PRESIDENT

DATE: Dec 15, 2025

CRS#_____

Registration # _____

ATTEST:

_____

_____,INTERIM CITY CLERK

CITY ATTORNEY'S OFFICE:

Marcos Martínez
Marcos Martínez (Dec 15, 2025 08:16:05 MST)

MARCOS MARTÍNEZ, SENIOR ASSISTANT CITY ATTORNEY

APPROVED FOR FINANCES:

01/09/2026

BRIAN MOYA
_____,FINANCE DIRECTOR

EXHIBIT B

AQUASIGHT
INTELLIGENT WATER SOLUTIONS

Amendment 1 - Revised
Santa Fe, NM Paso Real WRF APOLLO™ Updates – Addition of AQSYNC™
Revised December 11, 2025

1. **Name:** **City of Santa Fe NM**
Public Works Department
200 Lincoln Avenue
Santa Fe, New Mexico 87501

1. **Existing Aquasight Solution Deployed:** **APOLLO 6.0**

2. **Amended APOLLO™ Scope:**

The contract scope is amended as noted below. This work is in addition to the existing APOLLO™ contract solution at the Santa Fe Paso Real WRF.

A. Replace Secondary Clarifier Module Scope in current contract with new AQSYNC™ solution

Completely replace the Secondary Clarifier Module in the current APOLLO™ solution for Santa Fe with a new AQSYNC™ module, Aquasight's data integration and observability solution for raw data (lab or live) data health and visualization.

AQSYNC™ will integrate data sources from the Paso Real WRF SCADA and Laboratory (LIMS) system. Its dashboards will display data health, timestamps of the last successful data checks, and provide tools to visualize and download raw data. The platform also includes a built-in "easy button" for AI-driven data guidance, which can be disabled if county policy restricts the use of generative AI in daily workflows.

Together, AQSYNC™ and APOLLO™ form a seamless system, creating a robust data integration environment that connects and normalizes large-scale, multi-source data while leveraging the strengths of both platforms.

This data quality step will ensure that Santa Fe's high-volume time-series data are brought into a single, trusted stream without burdening utility resources.

This no-cost change order to replace the Secondary Clarifier Module with AQSYNC™ will complete the onboarding phase of the current APOLLO™ contract.

B. Postpone Secondary Clarifier Module

Due to delays in establishing reliable and high quality data for secondary clarifier operation at the Paso Real WRF, this module will be postponed to when this data is available (estimated in 2026). Addition of the Secondary Clarifier module later will require an additional change order with additional pricing (price TBD).

3. **AQSYNC™ Deployment Timing:** Four (4) to Eight (8) calendar weeks

4. **Change Order Contract Term:** Aligned with current Annual Contract

5. **Change Order Incremental Fees:** No Cost Change Order

All State and Local taxes are additional as required.

6. **Payment Schedule:**
   - Onboarding fees – N/A
   - Annual Subscription Service for AQSYNC™ will start from the time of this agreement and end at the end of the current 3-year service contract for APOLLO™.
   - Payment Terms are Net 30

7. **AVA™ Water Assistant Addendum to Aquasight Subscription Agreement**

   The Aquasight Subscription Agreement as modified and approved in the current contract shall be amended to include the AVA™ Water Assistant Addendum as noted in the attached.

All project fees and terms and conditions of the current contract with the City of Santa Fe, NM shall remain unchanged except as noted herein.

ADDENDUM TO AQUASIGHT SUBSCRIPTION AGREEMENT
(AVA AI Water Assistant Addendum)

This Addendum ("Addendum") is entered into by and between Aquasight, LLC ("Aquasight") and the Customer (as defined in the Aquasight Subscription Agreement dated September 25, 2024) and is effective as of the later of (i) the Effective Date of the Agreement, or (ii) the date the Customer first activates or accesses the AVA feature (the "Effective Date of Addendum").

This Addendum supplements and is incorporated into the Aquasight Subscription Agreement (the "Agreement"). Except as expressly modified herein, all other terms and conditions of the Agreement remain in full force and effect. Capitalized terms used but not defined in this Addendum have the meanings given to them in the Agreement.

1. AVA Subscription and Use of AI Technology

1.1 Description of Service.
Aquasight offers an optional feature known as AVA, AI Water Assistant ("AVA"), which utilizes artificial intelligence ("AI") and large language model ("LLM") technology to generate automated insights, recommendations, and related content based on Customer Data and other available inputs.

1.2 Acknowledgment of AI Processing.
By enabling or accessing AVA, the Customer acknowledges and agrees that:
(a) AVA's functionality is powered in part by third-party AI and LLM service providers;
(b) to enable such functionality, certain Customer Data, prompts, or related inputs may be transmitted to, and processed by, such third-party providers solely for the purpose of generating AVA insights and responses; and
(c) Aquasight does not control the operation, training, or performance of any third-party LLM.

1.3 AI Output Disclaimer.
The Customer understands and agrees that AVA's outputs are generated through probabilistic AI models and may not always be accurate, complete, or current. All AI-generated content is provided "as is" and for informational purposes only. The Customer remains solely responsible for independently reviewing, validating, and determining the suitability of any AI-generated output before relying upon it for operational or decision-making purposes.

1.4 No Warranty for AI Content.
To the fullest extent permitted by law, Aquasight expressly disclaims all warranties, express or implied, with respect to AVA and any AI-generated content, including but not limited to warranties of accuracy, reliability, merchantability, fitness for a particular purpose, or non-infringement.

1.5 Limitation of Liability.
Aquasight shall not be liable for any errors, omissions, or outcomes resulting from the use of AVA or any AI-generated content. Use of AVA and reliance upon its outputs shall be at the Customer's sole risk. The limitations of liability set forth in Section I.6 of the Agreement shall apply in full to this Addendum and to the Customer's use of AVA.

2. Confidentiality and Data Handling

2.1 Authorization to Transmit Data.
Customer hereby authorizes Aquasight to transmit limited Customer Data to third-party AI or LLM service providers solely for the purpose of enabling AVA functionality and agrees that such transmission shall not constitute a breach of Section H (Confidentiality) of the Agreement.

2.2 Data Usage Limitation.
Aquasight shall not permit any Customer Data transmitted through AVA to be used by Aquasight or its third-party providers to train, fine-tune, or otherwise improve external or public AI models, except in aggregated and anonymized form.

2.3 Retention.
Aquasight shall retain any Customer Data processed through AVA only as necessary to perform the AVA service and in accordance with Aquasight's data retention and security practices under the Agreement.

3. Customer Responsibilities

3.1 Compliance and Oversight.
Customer is responsible for all use of AVA by its authorized users and shall ensure that such use complies with applicable laws, regulations, and the terms of this Addendum.

3.2 Independent Validation.
Customer acknowledges that AVA is intended to assist and augment human decision-making and does not replace Customer's professional judgment or diligence.

4. Term and Termination

This Addendum shall remain in effect for as long as the Customer's subscription under the Agreement remains active, unless terminated earlier by either party in accordance with Section D of the Agreement. Upon termination or expiration of the Agreement or this Addendum, Customer's access to AVA shall automatically cease.

5. Miscellaneous

This Addendum is governed by and construed in accordance with the governing law set forth in Section K.1 of the Agreement. In the event of any conflict between the terms of this Addendum and the Agreement, the terms of this Addendum shall control solely with respect to the AVA feature and related AI functionality.

CITY OF SANTA FE

Note to File

Date: January 5, 2026

To: Governing Body, Finance Committee, and Public Works & Utilities Committee

From: Michael Dozier, Wastewater Management Division Director, Public Utilities Department

Via: Jesse Roach, Interim Public Utilities Director

Subject: Amendment to Professional Services Contract for Aquasight, LLC.

Vendor Name: Aquasight, LLC.

Munis Vendor Number: 10422

BACKGROUND AND SUMMARY:

In reference to the Paseo Real Water Reclamation Facility Administrative Order Emergency Project (40-M0087-24-EM030), the Public Utilities Department has submitted an Emergency Determination Form for emergency procurement to implement a comprehensive plan that provides interim corrective measures and for the long-term success in operating and managing the Paseo Real Water Reclamation Facility (PRWRF) necessary to ensure compliance with NPDES and Discharge Permits within the shortest possible time. The referenced Administrative Order (AO), which the City received on March 6th, 2024 from the U.S. Environmental Protection Agency (EPA) Region 6 and amended July 10, 2024 (CWA-06-2024-1765), is attached and requires within 30 days the submission of the comprehensive written plan for the elimination of the violations within the shortest possible time, as well as measures to prevent these or similar violations from recurring.

On 4 November 2024, the contract was completed with the vendor. A purchase order (FY25-22503195) was placed for APOLLO, a digital twin software, that would allow operators to see trends in Supervisory Control and Data Acquisition (SCADA) information, laboratory data and operations logs and make informed decisions for the operation of the Paseo Real Wastewater Reclamation Facility (PRWRF). This software requires proper connections to specific data streams (Operator 10 Wastewater) from PRWRF equipment to be able to provide the dashboard with useful information.

PRWRF has been having issues (communication fiber and control module installations) getting the Secondary Clarifier system SCADA information connected and shared to the data streams, so on 18 November 2025 the Contractor provided an alternative to the data at no change in the compensation. The alternative was to change out modules and programming from the Clarifier module to one called AQSYNC. This module for APOLLO will provide our operators with a new product that pairs our data with an artificially intelligent large language model (LLM) that discovers the trends in our data and provides interactive guidance on reasons why the data may look the way it does. This would be an improvement over APOLLO which only displays the data in a dashboard but does not analyze it for us. With the new module, the Contractor will be able to complete our onboarding process and can add the replaced module and other modules at a later time.

Posting is closed. Thank you!

CITY OF SANTA FE
CENTRAL PURCHASING

CLOSED
Other

60-M0087-25-EM133 - Pump and filtration equipment for maximum flows

Emergency Wastewater

Close Date: 12/15/2025

Release Date: Thursday, November 13, 2025 · **Due Date:** Saturday, December 13, 2025 2:00pm

Posted Thursday, November 13, 2025 2:17pm

All dates & times in Mountain Time

Post Information

Posted At:	Thu, Nov 13, 2025 2:17 PM
Sealed Bid Process:	No
Private Bid:	No

CERTIFICATE OF LIABILITY INSURANCE

DATE (MM/DD/YYYY): 12/10/2025

THIS CERTIFICATE IS ISSUED AS A MATTER OF INFORMATION ONLY AND CONFERS NO RIGHTS UPON THE CERTIFICATE HOLDER. THIS CERTIFICATE DOES NOT AFFIRMATIVELY OR NEGATIVELY AMEND, EXTEND OR ALTER THE COVERAGE AFFORDED BY THE POLICIES BELOW. THIS CERTIFICATE OF INSURANCE DOES NOT CONSTITUTE A CONTRACT BETWEEN THE ISSUING INSURER(S), AUTHORIZED REPRESENTATIVE OR PRODUCER, AND THE CERTIFICATE HOLDER.

IMPORTANT: If the certificate holder is an ADDITIONAL INSURED, the policy(ies) must have ADDITIONAL INSURED provisions or be endorsed. If SUBROGATION IS WAIVED, subject to the terms and conditions of the policy, certain policies may require an endorsement. A statement on this certificate does not confer rights to the certificate holder in lieu of such endorsement(s).

PRODUCER	CONTACT NAME: Sabrina Marianna Papaleo	
Paradiso Financial and Insurance Services, LLC 8 E Main Street Stafford Springs, CT 06076	PHONE (A/C, No, Ext): (860)684-5270	FAX (A/C, No): (860)851-9564
	E-MAIL ADDRESS: sabrina@paradisoinsurance.com	
	INSURER(S) AFFORDING COVERAGE	NAIC #
	INSURER A : Hartford Ins of the Midwest	
INSURED	INSURER B :	
AQUASIGHT LLC 1650 W Big Beaver Rd Ste 101 Troy, MI 48084-3531	INSURER C :	
	INSURER D :	
	INSURER E :	
	INSURER F :	

COVERAGES **CERTIFICATE NUMBER: 96002055-0** **REVISION NUMBER: 6**

THIS IS TO CERTIFY THAT THE POLICIES OF INSURANCE LISTED BELOW HAVE BEEN ISSUED TO THE INSURED NAMED ABOVE FOR THE POLICY PERIOD INDICATED. NOTWITHSTANDING ANY REQUIREMENT, TERM OR CONDITION OF ANY CONTRACT OR OTHER DOCUMENT WITH RESPECT TO WHICH THIS CERTIFICATE MAY BE ISSUED OR MAY PERTAIN, THE INSURANCE AFFORDED BY THE POLICIES DESCRIBED HEREIN IS SUBJECT TO ALL THE TERMS, EXCLUSIONS AND CONDITIONS OF SUCH POLICIES. LIMITS SHOWN MAY HAVE BEEN REDUCED BY PAID CLAIMS.

INSR LTR	TYPE OF INSURANCE	ADDL INSD	SUBR WVD	POLICY NUMBER	POLICY EFF (MM/DD/YYYY)	POLICY EXP (MM/DD/YYYY)	LIMITS	
A	X COMMERCIAL GENERAL LIABILITY			02SBABP2VW2	06/15/2025	06/15/2026	EACH OCCURRENCE	$ 1,000,000
	CLAIMS-MADE X OCCUR						DAMAGE TO RENTED PREMISES (Ea occurrence)	$ 1,000,000
							MED EXP (Any one person)	$ 10,000
							PERSONAL & ADV INJURY	$ 1,000,000
	GEN'L AGGREGATE LIMIT APPLIES PER:						GENERAL AGGREGATE	$ 2,000,000
	X POLICY PRO-JECT LOC						PRODUCTS - COMP/OP AGG	$ 2,000,000
	OTHER:							$
A	AUTOMOBILE LIABILITY			02SBABP2VW2	06/15/2025	06/15/2026	COMBINED SINGLE LIMIT (Ea accident)	$
	ANY AUTO						BODILY INJURY (Per person)	$ 1,000,000
	OWNED AUTOS ONLY / SCHEDULED AUTOS						BODILY INJURY (Per accident)	$ 1,000,000
	X HIRED AUTOS ONLY / X NON-OWNED AUTOS ONLY						PROPERTY DAMAGE (Per accident)	$ 1,000,000
								$
A	X UMBRELLA LIAB X OCCUR			02SBABP2VW2	06/15/2025	06/15/2026	EACH OCCURRENCE	$ 5,000,000
	EXCESS LIAB CLAIMS-MADE						AGGREGATE	$ 5,000,000
	DED RETENTION $ 0							$
A	WORKERS COMPENSATION AND EMPLOYERS' LIABILITY Y/N	N / A		02WECBP2W0Y	06/15/2025	06/15/2026	X PER STATUTE OTH-ER	
	ANY PROPRIETOR/PARTNER/EXECUTIVE OFFICER/MEMBER EXCLUDED? N (Mandatory in NH)						E.L. EACH ACCIDENT	$ 1,000,000
	If yes, describe under DESCRIPTION OF OPERATIONS below						E.L. DISEASE - EA EMPLOYEE	$ 1,000,000
							E.L. DISEASE - POLICY LIMIT	$ 1,000,000
A	Errors & Omissions			02SBABP2VW2	06/15/2025	06/15/2026	Occurrence	3,000,000
A	Cyber Liability			02SBABP2VW2	06/15/2025	06/15/2026	Occurrence	3,000,000

DESCRIPTION OF OPERATIONS / LOCATIONS / VEHICLES (ACORD 101, Additional Remarks Schedule, may be attached if more space is required)

The Certificate Holder, City of Sante Fe is listed additional insured's on the General Liability policy with respect to ongoing and completed operations where required by written contract, additional insured coverage provided under the General Liability and Umbrella applies on a primary and noncontributory basis. General Liability, Auto & Work Comp includes waiver of subrogation on behalf of the additional insured as required by written contract and where allowed by law.

.

(continued on ACORD 101 Additional Remarks Schedule)

CERTIFICATE HOLDER

City of Santa Fe
200 Lincoln Ave
Santa Fe, NM 87501

CANCELLATION

SHOULD ANY OF THE ABOVE DESCRIBED POLICIES BE CANCELLED BEFORE THE EXPIRATION DATE THEREOF, NOTICE WILL BE DELIVERED IN ACCORDANCE WITH THE POLICY PROVISIONS.

AUTHORIZED REPRESENTATIVE

(SMP)

© 1988-2015 ACORD CORPORATION. All rights reserved.

AGENCY CUSTOMER ID: _____

LOC #: _____

ADDITIONAL REMARKS SCHEDULE

AGENCY	NAMED INSURED
Paradiso Financial and Insurance Services, LLC	AQUASIGHT LLC
POLICY NUMBER: 02SBABP2VW2	
CARRIER: Hartford Ins of the Midwest / NAIC CODE:	EFFECTIVE DATE: 06/15/2025

ADDITIONAL REMARKS

THIS ADDITIONAL REMARKS FORM IS A SCHEDULE TO ACORD FORM,

FORM NUMBER: 25 FORM TITLE: Certificate of Liability Insurance

(continued from Description of Operations)
Certificate holder is an additional insured per the Business Liability Coverage Form SL3032 attached to this policy.
Waiver of Subrogation applies in favor of the Certificate Holder per the Business Liability Coverage Form SL0000, attached to this policy.
Coverage is primary and noncontributory per the Business Liability Coverage Form SL0000, attached to this policy.

© 2008 ACORD CORPORATION. All rights reserved.

The ACORD name and logo are registered marks of ACORD

City of Santa Fe
Emergency Determination Form

The Department that makes an emergency procurement to plan or prepare for the response to a serious threat to public health, welfare, safety or property caused by a flood, fire, epidemic, riot, act of terrorism, equipment failure or similar event shall account for the money spent in making the procurement and report on that accounting to the City's Finance Department Director within ninety days after the end of the contract or fiscal year in which the procurement was made, whichever comes first.

I. Department: Public Utilities, **City of Santa Fe**

Department Director: John Dupuis

Department Contact: _P. Fred Heerbrandt, P.E.

Department Telephone Number: 505-955-4623

City of SF Chief Procurement Officer: **Travis Dutton-Leyda, CPO**

Telephone Number: **(505) 629-8351**

II. **A. Name of Contractor: AquaSight**

Address of Contractor: 1650 W. Big Beaver Rd., Troy MI 48084

Amount of prospective contract: $350,000.00

Term of prospective contract: Three years

B. Name of Contractor: Great Western Electrical

Address of Contractor: 3310 Girard NE, Albuquerque, nm 87107

Amount of prospective contract: $155,690.08

Term of prospective contract: One year

C. Name of Contractor: Carollo Engineers, Inc.

Address of Contractor: P. O. Box 30835, Salt Lake City, UT 84130-0835

Amount of prospective contract: $80,000.00

Term of prospective contract: One year

D. Name of Contractor: ITSQUEST Staffing

Address of Contractor: 1012 Marquez Pl Ste 301B, Santa Fe, NM 87505

Amount of prospective contract: $264,463.70

Term of prospective contract: One year and two months

E. Name of Contractor: Hazen and Sawyer

Address of Contractor: 100 Sun Ave. NE, Suite 206, Albuquerque, NM 87109

Amount of prospective contract: $2,718,000.00

Term of prospective contract: 2.5 years

F. Name of Contractor: A.A.C. Construction, LLC

Address of Contractor: 18 La Luna Rd, Santa Fe, NM 57507

Amount of prospective contract: $2,465,837.04

Term of prospective contract: Two Years

G. Name of Contractor: Molzen Corbin

Address of Contractor: 2701 Miles Rd. SE, Albuquerque, NM 87106

Amount of prospective contract: $180,000

Term of prospective contract: Two Years

H. Name of Contractor: Rain for Rent (Western Oilfields Supply Co.)

Address of Contractor: 2495 Lakeside Drive, Las Cruces, NM 88007

Amount of prospective contract: $903,214.87

Term of prospective contract: Three Years

GRAND TOTAL: $7,117,250.69

The attached contractors and their associated scopes of work will assist City staff in bringing the wastewater reclamation facility into compliance.

Location of Services: Paseo Real Wastewater Reclamation Facility, 73 Paseo Real, Santa Fe, NM 87507

III. **Please thoroughly list the services (scope of work), construction or items of tangible personal property of the contract:**

1. Emergency funding request to remediate issues currently affecting the WWTF
   a. Contractors: Hazen and Sawyer ($2.7M), AAC construction (est.$2.5M), Carollo ($80k), Aquasight ($350k), ITSQuest (scheduler $264k), Great Western ($156k), Molzen Corbin ($180k), Rain for Rent ($903K)
   b. Improvements Plan
      - Quarterly Reporting disconnect
      - Weekly Meetings with NMED
      - Unit Process Operating Strategy documentation (Carollo/Hazen)
      - Instrumentation Implementation
      - Model Development/SCADA Integration
      - Sample and Reporting External Support
      - Advanced SCADA for Each Process
      - Unit Process Improvements

See attached proposals and scopes of work for details.

IV. **Provide an explanation for the justification of the procurement including a description of the emergency condition(s) requiring use of emergency procurement and the practicable competition utilized in compliance with NMSA 1978, § 13-1-127.**

The United States Environmental Protection Agency (EPA) has issued an Administrative Order (AO) issued to the City of Santa Fe for violations of the Clean Water Act (CWA) (33 U.S.C. §§ 1251-1387). The violations were identified during a review of the permit file and discharge monitoring reports submitted for the Paseo Real Wastewater Reclamation Facility. The violations alleged are for failure to meet permit effluent limitations. This AO does not assess a monetary penalty; however, it does require compliance with applicable federal regulations.

Similarly, the New Mexico Environment Department (NMED) has determined that the City of Santa Fe Paseo Real Wastewater Treatment Plant (WWTP) has been operating in noncompliance with the New Mexico Water Quality Act (WQA) and Water Quality Control Commission (WQCC)' regulations (20.6.2 and 20.6.4 New Mexico Administrative Code) adopted pursuant to the WQA.

To facilitate the most efficient response to these regulators, the City requires emergency procurement to develop a plan and to implement that plan to bring the Paseo Real Wastewater Reclamation Facility into compliance as soon as is feasible to do so.

EPA Region 6 Administrative Order Attached.

III. **Please describe what measures are being taken to minimize the duration and effect of this particular emergency procurement (for example: is the emergency only in place until a competitive process can be completed, etc.).**

By immediately bringing these contractors in to perform their requested scopes of work, we can begin to bring the facility into compliance, thereby eliminating or minimizing the associated risks to public health and safety associated with the non-compliant discharge.

IV. **Describe what measures the Department will take in the future to prevent/mitigate use of emergency procurement under similar circumstances.**

It is our goal and desire to prevent the conditions that precipitated the need for this emergency procurement by implementing the measures afforded by this emergency procurement.

Certified by:

_____ Apr 3, 2024

City Chief Procurement Officer, Travis Dutton-Leyda **Date**

City Approval by:

John Dupuis (Apr 4, 2024 10:44 MDT) Apr 4, 2024

Department Director, John Dupuis **Date**

Marcos Martinez Apr 3, 2024

Marcos Martinez (Apr 3, 2024 17:03 MDT)

City Attorney, Erin McSherry **Date**

John Blair
John Blair (Apr 3, 2024 18:09 MDT)

Apr 3, 2024

City Manager, John Blair **Date**

Emily K. Oster

Apr 4, 2024

Finance Director, Emily Oster **Date**

Note: All emergencies must be posted to the SPD website:
https://www.generalservices.state.nm.us/statepurchasing/submit-emergency.aspx
and the City of Santa Fe's website:
https://santafenm.gov/finance-2/purchasing-1/solicitations

UNITED STATES ENVIRONMENTAL PROTECTION AGENCY
Region 6
FINDINGS OF VIOLATION AND COMPLIANCE ORDER
Docket Number: CWA-06-2024-1745; NPDES Permit Number: NM0022292

STATUTORY AUTHORITY

The following findings are made, and Order issued under the authority vested in the Administrator of the United States Environmental Protection Agency (EPA) by Section 309(a) of the Clean Water Act (Act), 33 U.S.C. § 1319(a). The Administrator of EPA delegated the authority to issue this Order to the Regional Administrator of EPA Region 6, who further delegated this authority to the Director of the Enforcement and Compliance Assurance Division.

FINDINGS

1. The City of Santa Fe (Respondent) is a municipality which was incorporated under the laws of the State of New Mexico, and as such, is a "person" as that term is defined at Section 502(5) of the Act, 33 U.S.C. § 1362(5), and 40 C.F.R. § 122.2.

2. At all times relevant to this Order (all relevant times), Respondent owned or operated a municipal wastewater treatment facility located at Airport Road, Santa Fe, Santa Fe County, New Mexico, 87504 (facility), and was, therefore, an "owner or operator" within the meaning of 40 C.F.R. § 122.2.

3. At all times relevant, the facility was a "point source" of a "discharge" of "pollutants" with its municipal wastewater to the receiving waters of Santa Fe River in Segment No. 20.6.4.113 of the Rio Grande Basin which are "waters of the United States" within the meaning of Section 502 of the Act, 33 U.S.C. § 1362, and 40 C.F.R. § 122.2.

4. Because Respondent owned or operated a facility that acted as a point source of discharges of pollutants to waters of the United States, Respondent and the facility were subject to the Act and the National Pollutant Discharge Elimination System (NPDES) program.

5. Under Section 301 of the Act, 33 U.S.C. § 1311, it is unlawful for any person to discharge any pollutant from a point source to waters of the United States, except with the authorization of, and in compliance with, an NPDES permit issued pursuant to Section 402 of the Act, 33 U.S.C. § 1342.

6. Section 402(a) of the Act, 33 U.S.C. § 1342(a), provides that the Administrator of EPA may issue permits under the NPDES program for the discharge of pollutants from point sources to waters of the United States. Any such discharge is subject to the specific terms and conditions prescribed in the applicable permit.

7. Respondent applied for and was issued NPDES Permit No. NM0022292 (herein the permit) under Section 402 of the Act, 33 U.S.C. § 1342, which became effective on September 1, 2021, and expires on August 31, 2026. At all relevant times, Respondent was authorized to discharge pollutants from the facility to waters of the United States only in compliance with the specific terms and conditions of the permit.

8. Part I.A of the permit places certain limitations on the quality and quantity of effluent discharged by Respondent. The relevant discharge limitations are indicated in the attached Table A.

9. Part I.C. of the permit requires the Respondent to sample and test its effluent and monitor its compliance with permit conditions according to specific procedures, in order to determine the facility's compliance or noncompliance with the permit and applicable regulations. It also requires the Respondent to file with EPA certified Discharge Monitoring Reports (DMRs) of the results of monitoring, and Noncompliance Reports when appropriate.

10. Certified DMRs filed by the Respondent with EPA in compliance with the permit show discharges of pollutants from the facility that exceed the permitted effluent limitations established in Part I.A of the permit, as specified in the attached Table B.

11. Each instance in which Respondent discharged pollutants to waters of the United States in amounts exceeding the effluent limitations contained in the permit is a violation of the permit and Section 301 of the Act, 33 U.S.C. § 1311. Each violation of the conditions of the permit or regulations described above is a violation of Section 301 of the Act, 33 U.S.C. § 1311.

12. Administrative Order (AO) Docket Number CWA-06-2019-1773 was issued on March 29, 2019, regarding the facility's NPDES permit excursions. The Respondent submitted a written response to the AO on May 31, 2019.

13. Administrative Order (AO) Docket Number CWA-06-2019-1818 was issued on August 26, 2019, regarding the facility's NPDES permit excursions. The Respondent submitted a written response to the AO on October 23, 2019.

14. Administrative Order (AO) Docket Number CWA-06-2021-1725 was issued on June 1, 2021, regarding the facility's NPDES permit excursions. The Respondent submitted a written response to the AO on June 11, 2021.

SECTION 309 (a)(3) COMPLIANCE ORDER

Based on the foregoing Findings and pursuant to the authority of Section 309 of the Act, EPA hereby orders Respondent to take the following actions:

A. Within thirty (30) days of the effective date of this Order, Respondent shall submit a list of the specific actions taken to correct the reporting and effluent violations cited in this Order.

B. Within thirty (30) days of the effective date of this Order, Respondent shall provide written certification to EPA, Region 6 that the violations cited herein have been corrected and that the facility is in compliance with the requirements of the permit.

C. In the event that Respondent believes complete correction of the violations cited herein is not possible within thirty (30) days of the effective date of this Order, Respondent shall, within thirty (30) days of the effective date of this Order, submit a comprehensive written plan for the elimination of the cited violations within the shortest possible time for EPA review. Such plan shall describe in detail the specific corrective actions to be taken and why such actions are sufficient to correct the violations. The plan may include interim corrective measures to address effluent limit violations as quickly as possible followed by subsequent permanent measures. The plan shall include a detailed schedule for the elimination of the violations within the shortest possible time, as well as measures to prevent these or similar violations from recurring.

D. If Respondent would like to arrange a meeting with EPA to discuss the allegations in this Order, it should contact EPA within forty-five (45) days of the effective date of this Order. The meeting will be held at the Region 6 offices, 1201 Elm Street, Dallas, Texas, and Respondent can provide any information it believes is relevant to this Order. Respondent shall submit to EPA all information or materials it considers relevant to EPA at least ten (10) days prior to the meeting.

E. To arrange a meeting, or to ask questions or comment on this matter, please contact Ms. Mona Tates, of my staff, at (214) 665-7152 or tates.mona@epa.gov.

F. Any information or correspondence submitted by Respondent to EPA under this Order shall be addressed to the following:

Ms. Nancy Williams
williams.nancy@epa.gov

and

Ms. Mona Tates
tates.mona@epa.gov

GENERAL PROVISIONS

Issuance of this Section 309(a)(3) Compliance Order shall not be deemed an election by EPA to forego any administrative, judicial, civil or criminal action to seek penalties, fines, or any other relief appropriate under the Act for the violations cited herein, or other violations that become known to EPA. EPA reserves the right to seek any remedy available under the law that it deems appropriate.

Respondent may seek federal judicial review of the Order pursuant to Chapter 7 of the Administrative Procedure Act, 5 U.S.C. §§ 701-706.

Failure to comply with this Section 309(a)(3) Compliance Order or the Act may result in further administrative action, or a civil judicial action initiated by the United States Department of Justice.

This Order does not constitute a waiver or modification of the terms or conditions of Respondent's NPDES permit, which remains in full force and effect. Compliance with the terms and conditions of this Order does not relieve Respondent of its obligation to comply with any applicable federal, state, or local law or regulation.

The effective date of this Order is the date it is received by the Respondent.

March 4, 2024

Date

Cheryl T. Seager

Digitally signed by Cheryl T. Seager
Date: 2024.03.04 16:05:14 -06'00'

Cheryl T. Seager, Director
Enforcement and
Compliance Assurance Division

This proposal provides an offer to provide staffing services. ITSQuest, Inc. offers a variety of employment and human resource services. A rate quote on additional services will be provided quickly.

Offer to: **John Dupuis**
City of Santa Fe Public Utilities Department
1142 Siler Road
Santa Fe, NM 87507
Phone: 505-955-4209
Email: jedupuis@santafenm.gov"

Position Title	Location	Dates of Service FY2024	Hourly Rate	Weeks	Weekly Units	Unit totals	Rate **	Subtotals	GRT Rate	GRT	Total Budget
Project Manager	SF	4/1/2024 - 6/30/2024	$63.10	13	40	520	$94.02	$48,889.88	8.1875%	$ 4,002.86	$52,892.74
									TOTAL PO AMOUNT		**$52,892.74**

* Dates are a maximum number of days to be worked. This is not a guarantee of days to be worked.

** To avoid overtime reiumbursements, temporary employees may not work over 40 hours per week.

Price Agreement Number: 40-00000-23-00027

Title: Temporary Administrative and Professional Staffing (GS-02F-006CA)

Term: October 6, 2023 - December 8, 2024

Date: March 19, 2024

Lola Priest

Signature

This offer is open for a period of thirty days. Acceptance by the offeree must be bound by issuing a purchase order.

This proposal provides an offer to provide staffing services. ITSQuest, Inc. offers a variety of employment and human resource services. A rate quote on additional services will be provided quickly.

Offer to:

John Dupuis
City of Santa Fe Public Utilities Department
1142 Siler Road
Santa Fe, NM 87507
Phone: 505-955-4209
Email: jedupuis@santafenm.gov"

Position Title	Location	Dates of Service FY2025	Hourly Rate	Weeks	Weekly Units	Unit totals	Max Bill Rate **	Subtotals	GRT Rate	GRT	Total Budget
Project Manager	SF	7/1/2024 - 6/30/2025	$63.10	52	40	2080	$94.02	$195,559.52	8.1875%	$ 16,011.44	$211,570.96

TOTAL PO AMOUNT $211,570.96

* Dates are a maximum number of days to be worked. This is not a guarantee of days to be worked.

** To avoid overtime reiumbursements, temporary employees may not work over 40 hours per week.

Price Agreement Number: 40-00000-23-00027

Title: Temporary Administrative and Professional Staffing (GS-02F-006CA)

Term: October 6, 2023 - December 8, 2024

Date: March 19, 2024

Lola Priest

Signature

This offer is open for a period of thirty days. Acceptance by the offeree must be bound by issuing a purchase order.

MOLZENCORBIN

March 20, 2024

Mr. Michael Dozier
Wastewater Division Manager
City of Santa Fe
P.O. Box 909
Santa Fe, New Mexico 87504-0909

RE: Emergency Purchase Order to Address EPA Administrative Order CWA-06-2024-1745 Citing Violations at the City of Santa Fe Paseo Real WWTP.

Dear Mr. Dozier:

The City of Santa Fe has requested that Molzen Corbin provide this Proposal for Engineering Services to assist in compliance with Administrative Order CWA-06-2024-1745. The Administrative Order was issued to the City of Santa Fe by the U.S. Environmental Protection Agency (USEPA) on March 4, 2024.

Molzen Corbin is one of the most experienced wastewater engineering firms in New Mexico. We have extensive experience designing, upgrading and retrofitting wastewater treatment facilities for communities throughout New Mexico. Our engineering staff regularly designs process modifications to improve performance at wastewater treatment facilities throughout the state.

We have assisted many communities when they have been issued Administrative Orders by the USEPA. We are experienced at working through the Administrative Order process to help communities comply with both the order and the conditions of their NPDES Permit. We have developed a template for responses to Administrative Orders and can assist them with their response.

Our process engineers work with the community's engineers and operators to evaluate data and assess operating conditions to solve water quality discharge problems. We may recommend changes to operating procedures, upgrades to existing facilities, replacement of aging equipment or installation of new infrastructure to improve effluent quality.

The City has expressed that Molzen Corbin develop a data-driven decision making approach to solving the problems at the Paseo Real Wastewater Treatment Facility. The City would like Molzen Corbin to explore ways that the Facility can be updated and streamlined so processes are equipped with that latest technology that is available.

Molzen Corbin understands that time is critical. The City of Santa Fe must submit a response to USEPA by April 3, 2024 as directed in Compliance Order Section C of the Compliance Order.

WILLINGNESS AND CAPABILITY

Molzen Corbin currently has staff available with the necessary expertise to assist the City of Santa Fe in complying with the Administrative Order. If the City needs services not offered by Molzen Corbin, this proposal includes fee for Additional Services that would allow Molzen Corbin to hire subconsultants. Additional Services may be used to explore multiple approaches to solving problems.

SCOPE OF SERVICES

This project may include but is not limited to the following:

- Research
- Process Engineering
- Design
- Construction Administration
- Telemetry and Controls

COMPENSATION
We propose to perform the Work described above on a Time and Materials basis based on our current Standard Billing Rates enclosed herein.

Basic Services – not to exceed $80,000 would include but not be limited to:

- Research
- Design
- Construction Administration

Additional Services – not to exceed $100,000 would include but not be limited to:

- Process Engineering
- Telemetry and Controls
- Other specialized services to be determined.

If you have any questions or require additional information, please contact Mr. Steve Morrow, P.E. at 505.242.5700.

Sincerely,

MOLZEN CORBIN



Kevin W. Eades, P.E.
Chief Executive Officer

Enclosure

MOLZEN-CORBIN & ASSOCIATES
STANDARD BILLING RATES
AS OF FEBRUARY 1, 2024

DEPARTMENT	BILLING CATEGORIES	2023 RATES
Architectural	Senior Principal Architect	273
	Principal Architect	252
	Senior Architect	210
	Project Architect	168
	Registered Architect	158
	Intern Architect 2	121
	Intern Architect 1	95
	Senior Architectural Designer	142
	Architectural Designer I	137
	Planner	111
	Landscape/Irrigation Designer	111
Civil Engineering	Senior Principal Engineer	273
	Principal Engineer	252
	Senior Engineer	231
	Project Engineer	189
	Professional Engineer	163
	Engineering Intern II	142
	Engineering Intern I	131
	Senior Civil Design Specialist	173
	Engineering Design Specialist	147
	Senior Engineering Design Tech	153
	Engineering Design Tech	116
	Associate Engineering Design Tech	95
Electrical Engineering	Senior Principal Engineer	273
	Principal Engineer	252
	Senior Engineer	210
	Project Engineer	184
	Professional Engineer	163
	Engineering Intern II	142
	Engineering Intern I	126
	Engineering Design Specialist	147
	Engineering Design Tech	116
	Associate Engineering Design Tech	95
Mechanical	Senior Mechanical Engineer	195

MOLZEN-CORBIN & ASSOCIATES
STANDARD BILLING RATES
AS OF FEBRUARY 1, 2024

Water Resource Engineering	Senior Principal Engineer	273
	Principal Engineer	252
	Senior Engineer	231
	Project Engineer	184
	Professional Engineer	163
	Engineering Intern II	142
	Engineering Intern I	131
	Sr. Engineering Design Specialist	168
	Engineering Design Specialist	142
	Engineering Design Tech	116
	O & M Specialist	116
	Associate Engineering Design Tech	95
CADD / Survey	CADD Operator II	84
	CADD Operator I	74
	Survey Technician	111
	Two Person Survey Crew	222
	Two Person GPS Survey Crew	247
	Licensed Surveyor	231
Construction Observation	Senior Observer/Manager	111
	Senior Observer	105
	Observer	100
Administration	Administrative Aide II	79
	Administrative Aide I	58
	Administrative Support	105
	Grants/Technical Administrator	116
	Computer Technician	126
	Senior Technical Writer / Editor	100

Miscellaneous Expenses

Copies	Per Copy	$0.11
Color Copies	Per 8 1/2 x 11 Copy	$1.00
Color Copies	Per 11 x 17 Copy	$2.00
Prints/Plots(24x36)	Per Sheet	$3.00
Mileage	Per Mile (per IRS)	
Sub-Consultants	Cost x 1.1	

Carollo Engineers, Inc.
On Call Engineering Services for
Water and Wastewater Processes and Treatment

SCOPE OF WORK
TASK ORDER 24-WW-01
Establishing Operational Excellence
March 19, 2024

The City of Santa Fe requested assistance to establish knowledge management tools that can be used to document the intent and nuances of each unit process. The resulting documentation can be used for training for new hires and refresher training for existing staff.

An evaluation of current conditions can help define available data, design parameters and current work routines. A gap analysis is typically used to establish the current conditions. From that analysis a more robust approach to formalize a variety of work practices and facility documentation that, if addressed, could provide more consistent facility operation. Consistent facility operation will result in reduced operating costs, less variable facility outputs, and improved O&M awareness.

Initially, three documents are desired. Two are Area Procedures and Expectations (APEs) to capture unit process information: Non-Potable Water Distribution (NPWD) and the Oxidation Ditch Biological Nutrient Removal (BNR) processes. The third is the initial Annual Operations Plan.

This Scope of Services includes working in concert with Hazen and Sawyer and the Wastewater Division Plant Superintendent, with concurrence with the Wastewater Division Director. For success, it is expected that the Plant Superintendent will be heavily involved in the development of the initiatives, with Carollo's and Hazen's Operations Specialists providing guidance and examples to complete and then launch the initiatives developed in this Scope of Services. It is probable that a variety of staff will be engaged, as many of these initiatives involve the existing database, upgraded presentation of concepts and instructions, and computer-based support.

The goal of this Scope of Services is to assist the City of Santa Fe and the Wastewater Division Plant Superintendent in developing means and methods to improve the operation and maintenance of wastewater treatment processes.

The work and resulting deliverables will be split between Carollo Engineers and (under separate authorization) Hazen. Additional authorizations may be required to complete the breadth of the envisioned Establishing Operational Excellence initiatives.

Services will include some or all of the specific tasks listed below, up to the budget upper limit for this Task Order.

PHASE 1 – Site Visit and Gap Analysis

Site Visit

1. This allows Operations Specialist(s) to learn the facility, but more importantly, meet the staff to establish our working relationships.

Conduct a gap analysis to understand the current state of facility operations.

1. The analysis will identify strengths, opportunities and concerns.
2. The results will be documented in a report.

Evaluate current databases for completeness.

1. Compare existing data and presentation to best-industry practices.
2. Includes daily process results, data tracking and trending used for process control and optimization.

Evaluate and upgrade existing unit process performance measurement reports.

1. Refine or establish key performance indicators to match typical industry practices.
2. Refine the presentation of performance data in monthly and annual formats to match KPIs and annual operating plan information.

Standardize unit process Standard Operating Procedures for the NPWD and BNR processes.

1. Evaluate existing SOPs against typical industry practices.
2. Define SOPs that may be missing.
3. Provide template to standardize SOPs based on EPA guidance.
4. Assist staff is the development of pilot SOPs based on the Oxidation Ditch BNR process.

Phase 2 – Develop Pilot APEs

Develop Area Procedures and Expectations (APEs) for the NPWD and BNR processes.

1. APEs will be developed in PowerPoint.
2. The presentation will define the treatment objectives, process control responses, control points, sampling locations, data recording, crucial SOPs, critical preventative maintenance activities, and expected duties and expectations of maintenance and operator personnel working within the process. These serve as a training tool for new employees and refresher information for others.
3. These APEs will be the model for all other identified process areas.

Draft a Facility Operations and Maintenance Plan (Plan).

1. The Plan establishes how O&M staff operate and maintain each unit process at the facility.
2. The Plan describes sampling means and methods used to demonstrate permit compliance.

Draft an Annual Operating Plan (AOP).

1. The AOP identifies factors, such as projected wastewater flows and loads, as well as activities, such as construction or extraordinary maintenance, which will impact plant operations in the coming year.
2. Based on these factors, specific operating strategies are identified for treatment unit processes for the year.

3. The AOP projects upcoming maintenance or construction activities for advanced planning to support budget allocations.
4. The plan identifies facility or capacity deficiencies to help inform capital improvement upgrades.

PRELIMINARY PROJECT APPROACH

The project objectives are provided below.

ID	Description	Work Required
Phase 1		
1.1	Site Visit and Gap Analysis	• Review current conditions • Conduct interview(s) • Confirm findings • Provide findings in a report
1.2	Process data reporting evaluation	• Evaluate existing means and methods • Provide report with suggested improvements
1.4	Data tracking and reporting	• Evaluate existing • Provide report with suggested improvements
1.5	Standard Operating Procedures	• Evaluate existing • Provide template for to standardize current and/or develop future SOPs
Phase 2		
2.1	NPWD Area Procedures and Expectations	• Develop PowerPoint • Provide NPWD staff training
2.2	BNR Area Procedures and Expectations	• Develop PowerPoint • Provide NPWD staff training
2.3	Facility Operations and Maintenance Plan	• Develop initial plan
2.4	Annual Operations Plan	• Develop initial plan

$80,000.00 of the contractual upper limit is allocated to work to be executed under this Task Order, inclusive of labor and expenses, but exclusive of NMGRT. The work will be invoiced on a time and materials basis. Project management time for staffing and budget management and reporting for this task order will be included when work is active on this task order. A progress report will accompany monthly invoices, providing a summary of work conducted under Task Order 24-WW-01 for the subject invoicing period. The invoice will indicate the amount of the $80,000.00 upper limit for this task order that has been incurred versus the amount remaining.

Approved:

Michael Dozier Wastewater Division Manager City of Santa Fe	John Rehring Vice President Carollo Engineers, Inc.
Date	Date
	Becky Luna Senior Vice President Carollo Engineers, Inc.
	Date

REVISED a WORK ORDER PRICING

A.A.C. Construction, LLC

OWNER: CITY OF SANTA FE SEWER DIVISION
Owner's Rep.: Michael Dozier
Project Contact : Michael Dozier, Ph: 505-955-4642

CONTRACTOR: A.A.C. Construction, LLC
PROJECT MANAGER: Andrew Sisneros, (505) 930-0481
Date: 3/19/2024

DESCRIPTION:	**Customer Concern: There is an emergency at the plant and filters have to be maintained and pumps need to be brought into working condition. House keeping of the sludge will be required to be exported from the facility. AAC is being tasked to support the WWTP with the solutions to the problems at hand.**
LOCATION:	**73 Paseo Real, Santa Fe, NM 87507**

	Item Description	Hours	Labor Rate	Total Cost
LABOR:	Coordinator	1200	$85.00	$102,000.00
	Superintendent	960	$65.00	$62,400.00
	Foreman	960	$55.00	$52,800.00
	Heavy Equipment Operator III	960	$50.00	$48,000.00
	Delivery Driver	640	$50.00	$32,000.00
	Truck Driver	640	$50.00	$32,000.00
	Laborer III	960	$45.00	$43,200.00
	Laborer III	960	$45.00	$43,200.00
	Laborer IV	960	$48.00	$46,080.00
	Electrician	640	$275.00	$176,000.00
	Welder	321	$230.00	$73,830.00
	TOTAL LABOR			**$711,510.00**

	Material Description	Material Quote Reference	Total Cost
MATERIAL:	Sand Media	3160cf	$25,000.00
	Anthracite	3160cf	$52,920.00
	Freight for sand		$38,500.00
	Freight for Anthracite		$22,000.00
	Traveling Pads, clean out sludge drying beds 80 each		$24,000.00
	Fittings, Pipes and Parts (Mechanical Supply)	ABQ P & P	$39,450.40
	Misc. Welding Supplies if needed, cat walk,small crane	LA	$25,000.00
	Consumable and misc materials welder		$8,500.00
	Misc Electrical Parts		$18,500.00
	TOTAL MATERIAL		**$253,870.40**

	Equipment Type	Rate Type	Rate	Qnty	Total Cost
EQUIPMENT:	289 Mini Loader		85	640	$54,400.00
	Excavator		160	150	$24,000.00
	Vac Trucks		200000	1	$200,000.00
	Dump Truck 1		155	360	$55,800.00
	Dump Truck 2		155	360	$55,800.00
	1 Ton P.U. With Trailer		30	10	$300.00
	1 Ton Service Truck		15	80	$1,200.00
	1 Ton Pick Up		15	150	$2,250.00
	Small Tools/Pumps, Saws, Hand Tools		25	640	$16,000.00
	Rebuild up to 8 each Flyt pumps		62000	8	$496,000.00
	Freight for Pumps to Abq		1200	40	$48,000.00
	Transport Excavator		1800	2	$3,600.00
	Transport Mini Loader		850	8	$6,800.00
	Telehandler		5000	3	$15,000.00
	TOTAL EQUIPMENT				**$979,150.00**

SUBTOTAL:	$1,944,530.40
Contractor's Fee 16%	$311,124.86
SUBTOTAL:	$2,255,655.26
Tax @ 8.1875%	$184,681.77
Insurance & Bonds	$25,500.00
GRAND TOTAL:	**$2,465,837.04**

Address: A.A.C. Construction, LLC, 18 La Luna Rd, Santa Fe, NM 87507

Authorized Signature

Date

N.M. License # 93237

3310 GIRARD N.E.
ALBUQ., N.M. 87107
(505) 881-6525
Fax (505) 881-6396

March 19, 2024

RE: Electrical Proposal
Santa Fe Waste Water SCATA Fiber Installation
Attention: Andrew Hardinge
Scope:

- Provide 18,000 feet of 1" innerduct.
- Provide 18,000 feet of TLC 24 fiber indoor, outdoor, and plenum rated.
- Provide and install 10 stainless NEMA4 boxes to end fiber runs in each building.
- Provide and install stainless NEMA4 boxes in manholes where fiber and innerduct splice.
- Pull innerduct and fiber per COSF WWTF proposed innerduct conduit system drawing.
- Provide and install a 2" EMT conduit from the SCATA room in the administration building to the underground manhole conduit system.
- Core holes into manholes to extend raceways to Las Campanas golf course pump house, dissolved air flotation control building, the holding tank by the lime bed, the maintenance office, and the primary clarifiers.

Labor	$70,363.35
Material retail	$63,101.26
Material 10% discount	$56,791.14
Equipment	$13,073.50
Permit	$800.00
Sub Total	$141,027.99
NMGRT @ 8.1875%	$11,546.67
Bond	$3,115.42
Total	**$155,690.08**

Exclusions

- Damaged to unmarked underground utilities.
- Testing and terminating the fiber.
- Overtime or after-hours work.
- Trench, conduit, fiber, and innerduct to secondary clarifiers and offices.

Regards,
Danny Burson
Project Manager

City of Santa Fe - Waste Water SCATA

MATERIAL	QUANTITY	RETAIL COST	UNIT	EXTENDED COST
STAINLESS JUNCTION BOXES	20	$699.87	E	$13,997.40
FIBER CABLE	18042	$105.54	C	$19,041.53
1" INTERDUCT	18000	$104.15	C	$18,747.00
1" INTERDUCT COUPLING	100	$0.61	E	$61.00
ASPHALT	17	$145.81	E	$2,478.77
2" RIGID	100	$1,797.92	C	$1,797.92
2" RIGID 90	12	$73.94	E	$887.28
2" RIGID COUPLING	12	$20.47	E	$245.64
2" RIGID NIPPLES	12	$11.10	E	$133.20
2" LOCKNUTS	20	$150.89	C	$30.18
2" PLASTIC BUSHINGS	30	$89.65	C	$26.90
2" EMT	300	$690.63	C	$2,071.89
2" EMT 90	8	$28.58	E	$228.16
2" EMT COUPLING	30	$643.06	C	$192.92
2" EMT CONNECTORS	8	$579.51	C	$46.36
2" MINERALLAC STRAPS	20	$182.47	C	$36.49
FULL STRUT	100	$953.53	C	$953.53
2" CONDUIT STRAPS	50	$349.53	C	$174.77
ALL THREAD	20	$370.11	C	$74.02
2" PVC	500	$363.38	C	$1,816.90
2" PVC COUPLINGS	20	$67.70	C	$13.54
2" PVC FEMALE ADAPTERS	20	$98.45	C	$19.69
TAPE	500	$52.37	M	$26.19
		$0.00		$0.00
Total Retail Cost				**$63,101.26**
10% DISCOUNT				**$6,310.13**
TOTAL				**$56,791.14**

N.M. License # 93237

3310 GIRARD N.E.
ALBUQ., N.M. 87107
(505) 881-6525
Fax (505) 881-6396

City of Santa Fe – Waste Water SCATA
#17 equipment rental or utilization breakdown

2018 caterpillar 259D	35@$29.10	$1,018.50
2018 caterpillar 301.7D	100@$66.80	$6,680.00
2006 caterpillar 416C	105@$48.10	$5,050.50
2017 Bomag BT 65 Tamper	55@$5.90	$324.50
Total		$13,073.50

Hazen and Sawyer
100 Sun Ave. NE, Suite 206
Albuquerque, NM 87109

March 18, 2024

John Dupuis
Public Utilities Director
City of Santa Fe Public Utilities Department
801 W. San Mateo Rd
Santa Fe, NM 87505

Re: Paseo Real Water Reclamation Facility (PRWRF)
Engineering, Operational Support, and Related Services in
Response to EPA Administrative Order CWA-06-2024-1745

Dear Mr. Dupuis:

We appreciated the opportunity to meet with the City of Santa Fe (City) on Wednesday, March 13, 2024 to discuss the referenced Administrative Order (AO) the City received from the U.S. Environmental Protection Agency (EPA) Region 6. As we discussed, the City would like to implement an overall plan that 1) responds to and resolves the AO, and 2) prepares the City for long-term, future success in operating and managing the Paseo Real Water Reclamation Facility (PRWRF) and similarly at a future facility being considered and visioned by the City as an eventual replacement for the PRWRF. The City's plan focuses on improving current data collection, regulatory compliance, operational, knowledge management / transfer, and management practices at the PRWRF, combined with selective capital improvements to existing PRWRF facilities. This comprehensive plan can be broken down into the following nine (9) steps:

1. Provide sampling and regulatory support to ensure compliance with existing permits.

2. Support the City's external communications with the New Mexico Environment Department (NMED).

3. Build a comprehensive base of knowledge management tools / decision trees to guide PRWRF staff in day-to-day operations and management of the facility.

4. Improve PRWRF laboratory practices, data management, workflows, and communications for all testing performed to ensure regulatory compliance and/or support treatment operations.

5. Provide an inventory of all PRWRF instrumentation, calibration practices, data flows, and uses of information currently collected and rectify gaps to improve process monitoring and control.

6. Develop a model for treatment operations using open-source software that integrates information available from lab test results and real-time supervisory control and data acquisition (SCADA) data.

7. Develop a "digital twin" model of PRWRF to simulate and help optimize treatment plant operations.

8. Develop tools for remote simulation and testing of proposed changes to plant operations.

9. Provide engineering support for short-term treatment plant improvement projects.

The following narrative further defines the specific activities and services Hazen and Sawyer ("Hazen") proposes to provide. This work will be performed under a new engineering services agreement between the City and Hazen to be issued in response to EPA Administrative Order CWA-06-2024-1745.

Scope of Work

1. Sampling and Regulatory Support

Hazen will coordinate one soil sampling event and four quarterly groundwater sampling events at the PRWRF, with the samples being analyzed for poly- and perfluoroalkyl substances (PFAS). Both the soil and groundwater samples will be analyzed using EPA Method 1633. The sampling and reporting will be conducted by a third party in the place of City staff, with minor support from City staff. We have assumed that a total of 10 soil samples will be collected during one soil sampling event (including duplicate samples), and that each sample will be collected from a depth of 2 to 3 feet below ground surface using a hand auger. Ten groundwater samples will be analyzed during each groundwater sampling event (7 PRWRF monitor wells and 3 quality assurance samples). The groundwater sampling for PFAS will begin before Hazen begins supporting the groundwater sampling that is required by the facility's discharge permits (discussed below).

Hazen will coordinate the quarterly groundwater sampling and analysis that is required under discharge permits DP-289 (Wastewater Reclamation Facility) and DP-135 (Sludge Disposal Facility) issued by the NMED Ground Water Quality Bureau (GWQB) for six (6) quarters, starting with the second quarter sampling event in 2024. Hazen will also coordinate the required reporting under these permits. The sampling and reporting will be conducted by a third party in the place of City staff, with minor support from City staff (e.g., for purge water disposal). The City will provide additional information (e.g., monthly totalized average daily and peak daily influent volumes, monthly volumes discharged to each reclaimed domestic wastewater recipient, discharge monitoring reports) for inclusion in the quarterly discharge permit reports prepared for NMED. This task will support the City in achieving compliance with the requirements of these permits.

2. Communications Support

Along with City leadership and staff, Hazen staff (Amy Ewing) will participate in weekly phone calls that will be scheduled with NMED to discuss the current and planned activities and progress made in support of responding to and resolving the AO.

3. **Build a comprehensive base of knowledge management tools / decision trees for PRWRF operations**

Daily activities by PRWRF operations, maintenance, and management staff will support routine and consistent compliance with permit limits established by the City's National Pollutant Discharge Elimination System (NPDES) Permit NM 0022292 once staff have a clear understanding of:

- The purpose of each unit process
- Key Performance Indicators (KPIs) for measuring its performance
- Its relationship to upstream and downstream unit processes
- Information needed to monitor the process, and
- Expectations for each level of staff on how to achieve performance goals set for the process

Hazen proposes to develop these understandings by developing a series of documents called Area Procedures and Expectations (APEs) for each of the seven (7) liquid stream unit processes and four (4) solids handling processes at PRWRF. Each APE, developed as a PowerPoint presentation, will provide a clear guide for each level of operations, maintenance, and management staff, and will provide specific guidance for how and when to adjust the process, by how much, and by whom. Hazen's production of APEs will leverage existing Operation and Maintenance (O&M) Manual and Standard Operating Procedure (SOP) documentation the City may already have in place for PRWRF.

APE production will also document gaps between available information routinely collected (e.g., lab tests and SCADA data) versus what is needed to achieve reliable performance, how such information is distributed, and what improvements to information management are needed so that key items are communicated to staff who need it the most and at a frequency that supports their needs. APE production will also identify information and records currently being collected that do not serve the purpose of optimizing a treatment process. Lastly, APEs will capture information provided during the development of Items 4 and 5 described below.

Once the APEs have been prepared, Hazen will provide on-site staff training for each. This will include administering knowledge assessment quizzes to confirm staff are absorbing the critical information needed to successfully operate and maintain each unit process.

The collection of APEs will form the foundation for PRWRF knowledge management / transfer to which existing staff can refer as they work to optimize facility operations and to train future staff. As "living documents", APEs can be periodically updated by the City to reflect new facilities and capital improvements implemented at PRWRF.

The next element of this PRWRF knowledge management program summarizes the information contained in the 11 APEs (7 for liquid processes / 4 for solids handling) and provides an overview for how each process is supposed to work. This document called **Unit Process Operating Strategies** provides a useful reference to all levels of PRWRF staff and will serve as a tool for newcomers so they can quickly become familiar with "the right way" to operate plant facilities.

The final element of the knowledge management program currently envisioned will be preparation of a PRWRF **Operational Plan**. This document will provide information on the staff hierarchy, command and

communications structure, state and federal regulatory permits, plant safety programs, interrelationships with other City work groups (e.g., purchasing and materials management), and key summaries about PRWRF unit processes extracted from the **Unit Process Operating Strategies** document. Whereas the latter focuses on the information needed to optimize plant treatment operations, the **Operational Plan** focuses on the PRWRF enterprise as a whole and the communications within each internal and external City work group needed to achieve the best performance possible from PRWRF.

4. Improve PRWRF laboratory practices, data management, workflows, and communications

Hazen will provide the City with external sampling and reporting support for samples that are collected by PRWRF staff and analyzed by the in-house laboratory to demonstrate compliance with applicable state and federal discharge permits and to support operational control of PRWRF unit processes. We will work with City staff to ensure that all lab process documentation is current and complete and will assist in clearly defining appropriate workflows for PRWRF staff involved in sample collection, testing, and reporting of results. This task will include performing a review of lab operations, external collection and testing of laboratory samples for a period of up to 4 weeks, and assistance with the transition back to in-house sampling and analysis after PRWRF staff roles and responsibilities have been clearly defined for future lab activity. Item 4 includes an initial workshop with Hazen and City staff to further define the City's specific goals and objectives for the work to be completed.

5. Provide an inventory of all PRWRF instrumentation

Hazen will develop an updated inventory of all instrumentation installed at PRWRF including calibration procedures and how this information is managed, stored, accessed, and communicated (e.g., paper logbooks, SCADA, Operator10™ software, or an alternate operational data storage platform/historian). This inventory will identify existing instruments that do not perform their intended function and/or could be re-deployed to provide the information needed by Operations staff. This inventory will also note opportunities to add instruments that will support real-time monitoring of treatment processes, as needed to accomplish Items 6 through 8 below. If practical, Hazen will use the City's current asset database format and structure to prepare this inventory of PRWRF instrumentation, which might then be used as an input to the City's asset management program.

6. Develop a model for treatment operations

Hazen will use the available information from lab data and SCADA data including any improvements to these sources realized through the outcomes of the work on Items 3 through 5 above, and will develop an operational model for PRWRF performance. This model will be developed using open-source software (e.g., SUMO™, BioWIN™, or similar product) and calibrated using the available data set. This model will be tested using the updated procedures for controlling and adjusting plant operations developed under our work for Item 3. This item includes an initial workshop with Hazen and City staff to further define the City's specific goals and objectives for the work to be completed.

7. **Develop a "digital twin" model of plant operations to simulate and help optimize treatment plant operations**

The modeling work for Item 6 will next be used to develop a more advanced model that will serve as a "digital twin" the City can use for a variety of purposes including:

- A testbed for proposed changes to existing modes of operation for a particular treatment process
- Observing responses to upset / unexpected conditions for influent wastewater
- Assessing the impact that mechanical breakdown of treatment plant equipment may have on plant performance

As described, the "digital twin" should allow the City to evaluate the plant's response to a suite of unexpected stressors and determine what facility improvements or changes to normal operating procedures will foster a more resilient operation. Item 7 includes an initial workshop with Hazen and City staff to further define the City's specific goals and objectives for the work to be completed.

8. **Develop tools for remote simulation and testing of proposed changes to plant**

The City has expressed interest in having Hazen partner with a nationally recognized firm to perform remote modeling, testing, and optimization of PRWRF operations, such as are provided by the company AM-Team or a similar entity. This item will build upon the work completed by Hazen for Items 3 through 7. The specific scope for Item 8 will be further refined once the outcomes for Items 3 through 7 have been established.

9. **Provide engineering support for short-term plant improvement projects at PRWRF**

The City has engaged the services of AAC Construction to perform select construction projects at PRWRF that are characterized as limited scope, remove-and-replace in-kind for specific treatment plant equipment / systems that are out of service or are no longer working. Examples of these limited scope projects include restoring two (2) former traveling bridge filter systems to working condition and installing a new mechanical bar screen the City previously procured. Hazen will provide the engineering support the Contractor may need to properly install and commission these equipment systems so that they perform as intended. There may be other projects of this type that the City decides to undertake, in addition to these two projects, for which Hazen can provide the engineering support the Contractor may need. We have included an allowance of $400,000 to cover the effort we anticipate may be needed for engineering support for short-term plant improvement projects.

Project Management

Hazen will perform ongoing project management activities including cost control and monitoring, invoicing, and general coordination with the City's project manager and staff for each of the 9 items of support described under **Scope** that the City authorizes. Each month, we will provide an overall progress report and invoice for authorized tasks similar to the reporting and invoicing process we currently employ for Engineering On-call Contract #23-0516.

Schedule

The work elements described under **Scope** are expected to be completed over the next 30 months, as needed and as directed by City staff. We are prepared to begin our work for the City immediately upon receipt of its written authorization to proceed.

Compensation

We are requesting an initial authorization of $2,718,000 including NMGRT to provide the services that are described under the Scope. Attachment 1 provides a budget breakdown for Items 1 through 7 and 9. As requested by the City, we have deferred estimating the effort for Item 8, pending completion of Items 1 through 7. All work will be performed on a time and materials basis using the labor rates attached to this letter. Please note these labor rates are the same rates used by Hazen for its work under Engineering On-Call Contract #23-0516 with the City of Santa Fe, and which get adjusted annually at the beginning of the City's fiscal year. Expenses may include reimbursable mileage, printing, mailing, supplies, and other similar costs incurred to perform the work. The Hazen Project Manager will provide status reports indicating percent complete by task with each monthly invoice.

Please call me at (505) 259-1679 or Charlie Leder at (505) 236-3889 if you have any questions or would like to discuss further Hazen's plan for providing services to help the City respond to EPA Administrative Order CWA-06-2024-1745.

Sincerely,

Greg Gates, PE
Vice President

Charles S. Leder, PE
Senior Associate

Accepted by City of Santa Fe Public Utilities Department

By: _____ Date: _____

Name: John Dupuis

Title: City of Santa Fe Public Utilities Director

Attachment 1

Proposed budgets for Engineering, Operational Support, and Related Services in Response to EPA Administrative Order CWA-06-2024-1745

Service Item	Proposed time and materials budget
1. Regulatory support	$ 250,000
2. Communications support	$ 25,000
3. Build a comprehensive base of knowledge management tools / roadmaps for PRWRF operations	$ 750,000
4. Improve PRWRF laboratory practices, data management, workflows, and communications	$ 350,000
5. Provide an inventory of all PRWRF instrumentation	$ 250,000
6. Develop a model for treatment operations	$ 300,000
7. Develop a "digital twin" model of plant operations to simulate and help optimize treatment plant operations	$ 200,000
8. Develop tools for remote simulation and testing of proposed changes to plant	TBD
9. Provide engineering support for short-term plant improvement projects at PRWRF	$ 400,000
Total estimated budget for all Items	$ 2,525,000
NMGRT Allowance[1]	$ 193,000
Total budget including applicable NMGRT	$ 2,718,000

1. Estimate calculated using the Albuquerque FY 2024 NMGRT rate of 7.625%. NMGRT will be assessed on labor and subconsultant work performed in New Mexico.

LABOR RATES FOR HAZEN AND SAWYER STAFF

	Rates over next 4 years			
	2023-2024	2024-2025	2025-2026	2026-2027
Vice President / Project Director	$348.91	$359.38	$370.16	$381.26
Senior Associate	$281.39	$289.83	$298.52	$307.48
Associate	$225.11	$231.86	$238.82	$245.98
Senior Principal Engineer	$191.33	$197.07	$202.98	$209.07
Principal Engineer	$168.83	$173.89	$179.11	$184.48
Engineer	$157.58	$162.31	$167.18	$172.20
Assistant Engineer	$135.06	$139.11	$143.28	$147.58
Technician	$112.55	$115.93	$119.41	$122.99
Effective date for rates	7/1/2023	7/1/2024	7/1/2025	7/1/2026

1. Work performed by subconsultants will be billed at cost plus a 10% mark-up

AQUASIGHT
INTELLIGENT WATER SOLUTIONS

March 19, 2024

John Dupuis
Director, Public Utilities Department
City of Santa Fe
200 Lincoln Avenue
Santa Fe, New Mexico 87501

Subject: Proposal for Aquasight APOLLO™ Intelligent Treatment Plant Solution

Dear Mr. Dupuis,

Aquasight is pleased to submit our proposal for implementation the APOLLO™ Intelligent Treatment Plant Solution for the City of Santa Fe Public Works Department.

With the primary goal of supporting your operations team and their successful work to meet all regulatory requirements at the Paseo Real Water Reclamation Facility, the APOLLO™ solution also will support many other benefits such as improved data visibility and mining for laboratory insights, identification of gaps in plant instrumentation, integration of Digital Twin capabilities for better process control, process optimization, and deeper knowledge capture for workforce training and support.

Our implementation program is collaborative, and we will work with your team to ensure project goals are achieved, and the City is provided with a strong foundational program for intelligent water and wastewater solutions.

If you have any questions, feel free to let us know. We look forward to working with the team.

Jonathan Hasson, PE

Vice President, Smart Water Solutions

Cc: Mahesh Lunani, CEO Aquasight

AQUASIGHT
INTELLIGENT WATER SOLUTIONS

SANTA FE PUBLIC UTILITIES

PASEO REAL WATER RECLAMATION FACILITY PROCESS OPTIMIZATION PROJECT PROPOSAL

March 19, 2024

BACKGROUND

The City of Santa Fe, NM provides wastewater collection, treatment, and disposal services for nearly 90,000 residents and businesses. The City owns and operates the 9 MGD annual average daily flow (AADF) (rated for 13 MGD) Paseo Real Water Reclamation Facility which is a conventional activated sludge plant that includes screening and sedimentation for primary treatment, oxidation ditch basins, aeration, and clarification for secondary treatment plus nitrogen reduction, and disk and sand filters, chlorination, and dechlorination for tertiary treatment before discharging into the Santa Fe River (**Figure 1**). The City recently received an Administrative Order for permit exceedances in both E. Coli and Nitrogen. As a measure to ensure improved plant effluent performance, optimize data usage and process performance, the City desires a rapidly deployable, data-driven solution for increase opportunities for successful permit compliance.

The PRWRF has adequate data for some process control, but also could benefit from additional sensors and instrumentation to make it a more data rich facility. Data is generated and stored in a variety of different systems, and many of those systems do not share/communicate data well for daily operational benefits. There is an abundance of untapped potential to integrate and mine this data using science or ML/AI-based algorithms to help with process optimization, capture energy and chemical savings, store process knowledge, create maintenance insights, and assist with troubleshooting. This will require a tool that can provide streaming analytics, smart advisors, Aquasight COPILOT^{TM}, and actionable assistance to the staff to create a data driven O&M culture.

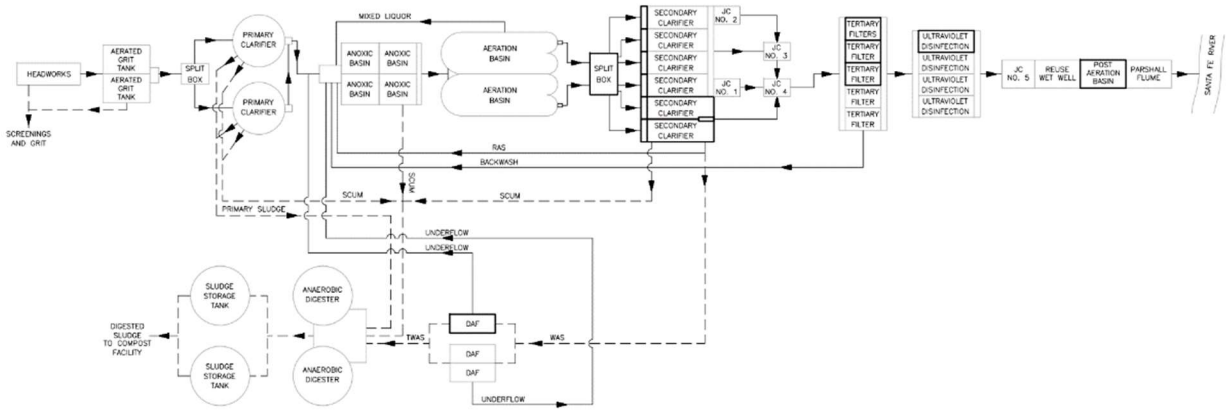

Figure 1: PRWRF Process Flow Diagram

PROJECT GOALS & EXPECTED BENEFITS

The City of Santa Fe Public Works is implementing a strategic initiative to further improve treatment plant effluent performance and reduce operating and maintenance costs by leveraging Aquasight's APOLLO™. The overall goal of this project is to implement a modular real-time advanced analytics and Copilot™ system for liquid unit processes that will support operator success for meeting permit discharge limits and support operational efficiencies for liquid processes that consume the greatest amount of power and chemicals. APOLLO™ will support the City's goals of continuous and measured progress towards the PRWRF optimization goals over time.

Benefits anticipated by implementation of the Aquasight APOLLO™ solution include:

- Deeper integration and sharing of Laboratory sampling data and insights supporting more informed operations.
- Identification of gaps in instrumentation throughout plant processes leading to a more data rich environment for improved process control, optimization, and decision making.
- Implementation of operator focused digital twin functionality allowing for improved real-time streaming insights into potential operational changes and their impacts on process performance KPIs.
- Capture of operational and institutional knowledge by providing a historical record of plant data and operational KPIs for improved new operator training and information recall.

In pursuit of this vision, Aquasight's APOLLO™ software is proposed to assist the City of Santa Fe by:

- Providing a one-stop integrated intelligence dashboarding and analysis solution.
- Integrating a copilot system with built in smart advisors.
- Driving energy and chemical savings and enabling fine tuning of control setpoints.
- Improving daily plant workflow and empowering a data driven decision culture.

- Storing operator knowledge to de-risk operator churn and retirements.
- Providing management visibility through remote off-site access.
- Highlighting compliance risks while providing quick access to process data.
- Enabling predictive maintenance of aeration and disinfection equipment.
- Providing robust tools for workforce training on plant performance at various flows and loads.
- Providing quick access of data for planning and engineering teams.
- Including monitoring and notifications on complex parameters.

Examples of the main dashboard for the aeration and secondary clarifier modules in action are provided in **Figure 2** and **Figure 3**, respectively.



Figure 2: Example of APOLLO's™ Activated Sludge (Aeration) Module

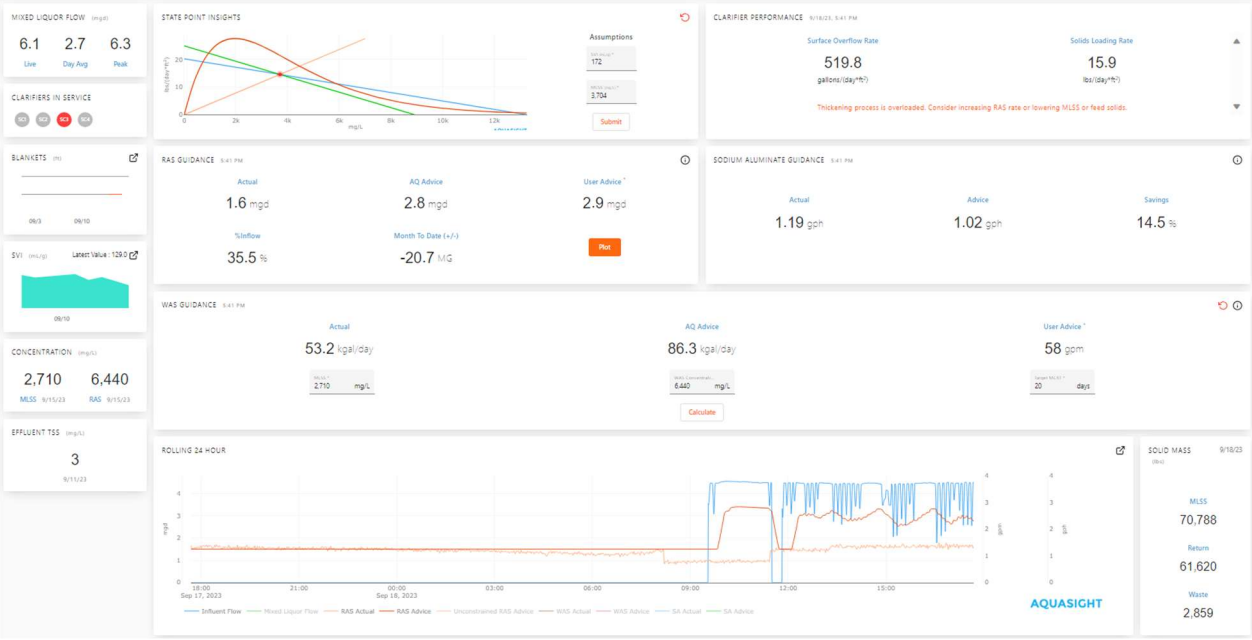

Figure 3: Example of APOLLO's™ Secondary Clarifier Module

SCOPE OF WORK

Generally, the scope of this project includes onboarding the PRWRF to Aquasight's APOLLO™ software equipped with seven (7) modules. The SCOPE OF WORK may change in the future depending on the needs of the plant. The final SOW will be determined in collaboration with the Utility team.

Table 1: Proposed APOLLO modules for PRWRF

Module	Description
Plant Dashboard	Default APOLLO™ module – Customizable dashboard that allows users to centralize analytics from various APOLLO™ modules to a single screen.
Weather	Default APOLLO™ module – Live weather radar with various meteorological layers.
Secondary Treatment – Activated Sludge	Focused on the aeration process, this module includes monitoring, analytics, and copilot dashboard and a detailed decode feature for analyzing aerator and process performance.
Secondary Treatment – Secondary Clarifiers	Focused on the secondary clarification process and RAS/WAS pumping, this module includes monitoring, analytics, and copilot

Appendix A: Background, Vision, Approach, and Scope

Module	Description
	dashboard and a detailed decode feature for analyzing process performance.
Disinfection	Focused on the UV disinfection with supplemental chlorination and dechlorination process, this module includes monitoring, analytics, and copilot dashboard and a detailed decode feature for analyzing permit compliance and process performance.
Lab Insights	Default APOLLO™ module – Provides users with a robust plotting tool for lab, live, and analytical data.
SAMI	Default APOLLO™ module – Digital alert system with customizable alert thresholds for parameters of the most critical interest.

Additionally, Aquasight will review data sources, data completeness, and instrumentation coverage for the PRWRF. We will make recommendations for additional instrumentation as may be necessary to optimize the data rich environment necessary for an optimized process solution.

The project goals described above will be completed through the following tasks:

Task 0 – Project Management
Task 1 – Data Polling
Task 2 – Site Visit and Plant Review Including Instrumentation Review and Recommendations
Task 3 – Aeration Onboarding
Task 4 – Secondary Clarifier & RAS/WAS Pumping Onboarding
Task 5 – UV Disinfection/Chlorination/Dechlorination Onboarding
Task 6 – Default Module Configuration
Task 7 – Training and Adoption

Appendix B: Project Milestones, Timeline, and Deliverables

The Aquasight scope of work for this project will have four key milestones and associated deliverables and will be implemented with approximately the following timelines (**Table 2)**. The timeline is subject to change by mutual agreement between Aquasight and the City of Santa Fe.

Table 2: Project Delivery Calendar

Milestones	WEEKS from Notice to Proceed	Aquasight Deliverables
1. Design Review, Instrumentation Review, Data Polling, Connections, Lab & Live Insights	~ 12 weeks	• APOLLO™ Release 1 – Lab Insights • Milestone 1 Report
2. Secondary Process & Aeration Modules	~ 16 weeks	• APOLLO™ Release 2 – Secondary & Aeration Modules • Milestone 2 Report
3. Disinfection Module & SAMI Alerts	~ 22 weeks	• APOLLO™ Release 3 – Disinfection Module & SAMI Alerts • Milestone 3 Report
4. Plant Dashboard, Training & Adoption	~ 26 weeks	• APOLLO™ Release 4 – Plant Dashboard, Training, & Adoption • APOLLO™ User Manual • Virtual Training Sessions

Appendix C: Required Participation from Santa Fe Public Works

DATA REQUIREMENTS

The following information is required from Santa Fe Public Works for successful project completion:

- Public Works SCADA Data Historian access,
- Public Works LIMS database access,
- Any applicable sensor/instrumentation API details,
- Where applicable, process data spreadsheets and mechanism to routinely upload,
- Process SOP's,
- Process design data,
- Equipment manufacturer information (specs, O&M manuals, etc.)
- Plant drawings of relevant processes,
- Energy bills,
- Control strategy documentation for automated control systems, and
- Plant budget and cost sheets

Where information is not available, assumptions will be made and discussed with Santa Fe Public Works team before implementing it in the APOLLO™ System.

O&M, SCADA, LAB, AND DESIGN CLARIFICATION MEETINGS

During deployment, in addition to or as a part of any project management meetings, Aquasight may request meetings with key Public Works staff. Such meetings are important to clarify operations, understand assumptions, and agree on key configurations in APOLLO™ systems.

Appendix D: Project Fee

Aquasight proposes the following Not-To-Exceed project fee for the APOLLO™ solution implementation for the City of Santa Fe Public Works Paseo Real Water Reclamation Facility:

APOLLO™ Onboarding Fee: **Not to Exceed $200,000**
APOLLO™ Annual Fee: **$50,000 per year, minimum three-year contract**

The project billing schedule will be included in the final contract documents, and shall have the basic invoice timing noted below:

- The Onboarding Fee shall be billed in monthly payments during the Onboarding period (estimated over 6 months) with the first Onboarding payment due at contract signing.
- The Annual Fee shall be billed at the beginning of each calendar year, with the first year Annual Fee billed at contract signing.

The following activities are covered in the annual fee:

- **APOLLO™ technology usage:** APOLLO™ technology that has been developed by Aquasight is the core foundation of this project. The technology will be the backbone for releases, metrics, advisors, KPIs and is accessible anywhere, on any device and at any time.
- **APOLLO™ system operations:** APOLLO™ system operations include lab and live database management, analytical scripts management, API management and user preferences, credential, and security management.
- **Infrastructure management:** APOLLO™ runs on several virtual machines and servers. These servers require upkeep and maintenance include software library updates, monitoring of infrastructure metrics and hardware management.
- **Advisor upkeep and maintenance:** Advisors require quality data inputs; unforeseen bad data quality events do occur in practical environment and advisors must be evolved to ensure it discards bad data or debugged to ensure optimal performance of smart advisors.
- **Ticket management and Help desk:** Access Aquasight help desk will operate 8:00 am to 5:00 pm EST during weekdays for any issues such as user access, applications and/or routine troubleshooting. Any high priority issue Aquasight will address in 1-to-4-hour time frame depending on type and nature of this issue during business hours and during weekend and holidays within 24-to-48-hour time frame.
- **SAMI:** Alert's system that manages e-mails, notifications, alert statistics, thresholds management and user settings.
- **Bug fixes:** If we detect any issues or bugs in optimal running of software or technology, Aquasight will fix free of cost and repair those bugs.
- **Data polling maintenance:** Polling software is installed in virtual machine within Santa Fe Public Works. When tag names are changed and database connections are reconfigured, this require polling software to be updated. Public Works should inform or discuss with Aquasight

before making changes on setting and access credentials which may disrupt the flow of data streaming to APOLLO™.

- **Free feature upgrade as part of APOLLO™ product roadmap:** Aquasight continuously evolves its technology and features for driving more value to customers. Such features will be available for free at no additional cost if they are part of the standard product roadmap.

Rain For Rent
2495 Lakeside Dr
Las Cruces, NM, 88007
575-524-0879
rainforrent.com
kconnell@rainforrent.com

BUCKMAN DIRECT DIVERSION
Account: 134939
341 CAJA DEL RIO RD Dba City Of Santa Fe
Santa Fe, NM, 87506
Michael Dozier
505-577-1132
Mldozier@santafenm.gov

Dear Michael Dozier,

Thank you for your inquiry. As requested, please find attached our proposal 1101-IND-2113715 for City of Santa Fe WWTP. We value this opportunity to provide a solution for your liquid handling need and we are committed to partnering with you to ensure your project's safe execution and completion.

To convert this proposal into a confirmed order WITHOUT ANY CHANGES, please click the "Start Signing" button to begin the electronic signature process.

If you would like to CHANGE anything in this proposal or discuss anything further, please call Kimbro Connell at 575-524-0879.

Thank you, and I look forward to working with you.

Regards,

Kimbro Connell
kconnell@rainforrent.com
Mobile: 505-436-0920
Branch: 575-524-0879
2495 Lakeside Dr
Las Cruces, NM, 88007

Project Name	City of Santa Fe WWTP	Jobsite	City of Santa Fe WWTP
Date Prepared	3/22/2024	Est. Delivery Date	4/1/2024
Prevailing Wage	No	Est. Completion Date	4/1/2025

Project Location

73 Paseo Real
Santa Fe, NM, 87507

Project Description and Overview

PROJECT DESCRIPTION

Quoted as 28day cycle rental

Does not include applicable sales tax or services

PROJECT OVERVIEW

Provide pump and filtration equipment for max flows of 5mgd at final clarification.

STATEMENT OF WORK

RFR Responsibilities & Scope of Work

Rain for Rent (RFR) will provide the following: Provide pump and filtration equipment for max flows of 5mgd at final clarification. (2) 60-4SK, (1) 48-4SK, DV200E pump, HDPE pipe and misc fittings.
Delivery, installation, removal, pickup of all quoted materials/equipment

Due to the multitude of economic factors, materials, labor, hauling and freight are currently in a period of above average volatility. If, during the performance of work, the price of materials, labor, hauling or freight increases by 5% or greater through no fault of Rain for Rent, the contract price shall be equitably adjusted by an amount reasonably necessary to cover any such price increases. Equipment subject to availability at time of project.

Reference Materials

Project is quoted based on applicable/customer provided reference materials noted below:
Job Walk(s) 3-13-2023

Operating Parameters

System includes: Sand Media
System is designed to operate at a flow rate of 5mgd peak @ 80tdh
The water source location will be clarifor and discharging at location after clarifor. .

Customer Responsibilities

It is the customer's responsibility to inform RFR about prevailing wage at time of proposal. If RFR is informed after the quote is issued that certified payroll is required, quote will be subject to additional charges.

Jobsite:
Customer is responsible for:
1. Informing RFR of any jobsite or general requirement(s) to perform work on location.
2. Securing permits, fees, bonding, right of ways, vehicular/pedestrian traffic control, and security.
3. Providing safe, secure access and egress to an adequate staging area throughout the job which could include brush clearing, grading, and removal or replacement of any landscape or hardscape in the temporary right of way for the equipment.
4. Any damage to the environment including trees, vegetation, stream banks, or any other part of the site caused by the installation, removal, construction, pulling or dragging of equipment, or operation of the equipment that would require site restoration or environmental countermeasures.

Proposal Number 1101-IND-2113715 Confidentiality Notice: This proposal and any associated document(s) are privileged and confidential and are intended for the sole use of the addressee(s). They cannot be used, circulated, duplicated, quoted, or otherwise referred to or disclosed to third parties for any reason without the written consent of an Officer of Western Oilfields Supply Company dba/Rain for Rent. If you have received this information in error, please immediately contact us at info@rainforrent.com.

Liquid Ingenuity®

5. Any excavation, saw cutting, trench plating for the purpose of road crossings, backfilling, restoration, modification, or alteration of any permanent structure or site element including changes to pump pad preparation, suction, or discharge chambers during duration of job (including installation and removal).

System:

1. Customer will provide dedicated equipment with operator and fuel to perform all needed unloading, testing, operations, maintenance, relocating, cleaning, and reloading of provided equipment/system. Equipment must be capable of lifting 9000 Lbs.
2. If installation provided by RFR and Customer is operating system, this Transfer of Operation form will need to be reviewed and signed by both parties upon completion of setup. (sample form only): **https://rainforrentcorp.box.com/v/systemtransferoperation**
3. Customer will provide fueling.
4. Customer will provide preventative maintenance as recommended by manufacturer or per the Rental Agreement. **https://rainforrentcorp.box.com/v/pumpmaintenance**
5. Customer will supply all needed water for the commissioning, startup, and system testing. Project specific criteria for hydrotesting can be provided at an additional charge.
6. By accepting this quotation, the customer has acknowledged that the equipment proposed herein is suitable for its intended application and accepts all liabilities associated with its use. Customer is responsible for compliance with appropriate liquid/material quality standards, regulations, and testing protocols to meet all federal, state, local and job location specific requirements. Customer is responsible for all waste materials associated with this equipment/system.
7. RFR recommends a small-scale trial run of this product application to ensure system effectiveness. RFR does not warranty the water quality or degree of filtration. At customer request, RFR can perform a Total Suspended Solids (TSS) bench test to better select the appropriate media for optimized filtration effectiveness. Customer will be responsible for the cost of all media.
8. The customer will be designated as the generator for all liquid/solids processed with the use of RFR equipment. All used filtration media, such as carbon, sand, cartridges, bags, coalescing packs, etc. becomes the property of customer and is the responsibility of customer for proper disposal.
9. To activate carbon, customer will need to pre-soak for 24 hours.
10. RFR has not included the cost of the removal and regeneration for non-hazardous carbon. Customer is responsible for TCLP sample for TCLP VOC's, TCLP SVOC's, TCLP RCRA 8, pH. **https://rainforrentcorp.box.com/v/carbongenerator** If the carbon is deemed hazardous and cannot be regenerated, customer is responsible for additional disposal costs and/or final disposal. No media or materials will leave the site unless the TCLP RCRA 8 has been received and deemed non-hazardous unless otherwise noted.
11. RFR equipment/vessels will be taken off rent when the required testing has been submitted and accepted by RFR/Source Carbon Supplier for recycling and or disposal. Vessels cannot be removed until we receive and accept the testing that indicates the carbon is deemed NON-HAZARDOUS. At that time, the equipment will be taken off rent and be scheduled for pick-up from the site. Should the carbon be deemed HAZARDOUS the customer will be responsible to pay a third party for the chain of custody, transportation, and disposal of this material.
12. Additional cleaning and/or inspections may be required if tested material is deemed anything besides non-hazardous.

Customer is responsible for:

1. Any work in confined spaces.
2. Protecting system from damage including any freeze protection necessary to safeguard equipment from damage. Should equipment become frozen and damaged, customer is responsible for repair of equipment. RFR can provide necessary freeze protection at an additional charge per executed change order. Equipment stays on rent until it can be returned.
3. Using equipment in a safe and proper manner in accordance with manufacturers' recommendations, regulatory standards, and industry best practices. Improper usage may cause equipment/system failure, damage, possible incidents, injuries, and spills.

Upon Pickup:

Contact the RFR office at 575-524-0879 to schedule pickup when equipment/system is cleaned and ready to be released.
Flushing and cleaning of equipment must be performed to RFR's standards prior to being called off rent. RFR personnel will perform a visual inspection. It is recommended to have a customer representative on-site during inspection. Equipment found not to be in "delivered condition" will not be picked up. e picked up.

Project Scheduling & Billing

This quote is valid for 30 days. For the quoted items, RFR requires a signed quote not less than 14 days prior to delivery.

Estimated schedule durations:
Mobilization: 2 days
Installation: 3 days
Operation: TBD
Removal: 2 days
Demobilization: 1 day
System Rental Duration: 1 year or more

Customer acknowledges that availability of equipment/system and/or media will be confirmed at time of order. Additional freight charges may

Proposal Number 1101-IND-2113715 Confidentiality Notice: This proposal and any associated document(s) are privileged and confidential and are intended for the sole use of the addressee(s). They cannot be used, circulated, duplicated, quoted, or otherwise referred to or disclosed to third parties for any reason without the written consent of an Officer of Western Oilfields Supply Company dba/Rain for Rent. If you have received this information in error, please immediately contact us at info@rainforrent.com.

apply subject to mutually agreed upon change order.

Billing

1. This is an estimate only. Actual Time and Material used for this job will be billed to the customer.
Any re-rented equipment may be billed according to the third party's billing period. All billing subject to our standard terms and conditions in the rental agreement.
A minimum 2 hour charge will be assessed in the event the crew is at site and weather forces cancellation of work for remainder of day.

Rain for Rent's standard hours of operation are 7:30am – 4:00pm Monday – Friday. Time outside of normal business hours will be billed at 1.5x the base rate for Transportation and Service

Safety

Each employee is expected to adhere to the RFR Environmental, Health and Safety programs, which will protect the environment, the health and safety of the customer, employees, and others. RFR asks for your full cooperation to succeed in this expected outcome.

Liquid Ingenuity®

Proposal Number 1101-IND-2113715 Confidentiality Notice: This proposal and any associated document(s) are privileged and confidential and are intended for the sole use of the addressee(s). They cannot be used, circulated, duplicated, quoted, or otherwise referred to or disclosed to third parties for any reason without the written consent of an Officer of Western Oilfields Supply Company dba/Rain for Rent. If you have received this information in error, please immediately contact us at info@rainforrent.com.

PROJECT COSTS	
Estimated Rental Total	$21,159.93
Estimated Environmental Recovery Fees	$687.70
Total Estimated Recurring Charges	$21,847.63
PROJECT COSTS	
Estimated Sale Total	$9,479.40
SERVICES	
Estimated Delivery	$14,818.04
Estimated Installation	$13,883.00
Estimated Removal	$8,018.00
Estimated Pickup	$2,618.04
GRAND TOTAL	$70,664.11

-Estimated costs do not include taxes

-Recurring rental project costs will be on a cycle/week/day basis+ tax

Engine driven equipment will be delivered with at least 50% fuel. A Fuel Convenience Charge will be implemented on a per gallon basis up to the delivered fuel level. Customer acknowledges that the Fuel Convenience Charge is not a retail sale of fuel. Customer may avoid the Fuel Convenience Charge if the Customer returns the Equipment at delivered level. The fuel convenience fee will be charged per gallon. No refunds will be given for a higher level of fuel upon return.

Customer Name _____ Customer Signature _____ Date _____

Proposal Acknowledgement

By signing this proposal, customer represents that he/she has read and agreed to both the Statement of Work and Quote Agreement sections, and is also agreeing to the grand total amount listed above, plus any recommended optional items if accepted and initialed. If customer requires a Purchase Order number to process and submit payment, it must be supplied to Rain for Rent at the time of acceptance of this proposal.

PO Number: _____

Rental Protection Plan

I have received and reviewed the Rental Protection Plan Agreement incorporated as the last page of this estimate. By initialing this paragraph, I understand that I am agreeing to enter into and be bound by the terms of the Rental Protection Plan Program Agreement and that I am authorized to enter into this Agreement on behalf of Customer. FOR ALL RENTALS OF EQUIPMENT, EXCEPT THOSE SPECIFICALLY EXCLUDED, YOU MAY EITHER SHOW PROOF OF PROPERTY INSURANCE IN ACCORDANCE WITH INSURANCE REQUIREMENTS AND RENTAL AGREEMENT OR PURCHASE THE RENTAL PROTECTION. THE PURCHASE OF THE RENTAL PROTECTION PLAN FOR RENTALS OF EQUIPMENT IS NOT MANDATORY AND MAY BE DECLINED IF YOU HAVE PROOF OF ALL RISK PROPERTY INSURANCE AS REQUIRED BY CONTRACT.

RPP	$3,174.00	**Accept** ○	**Decline** ○

INITIAL	

Created Date: 3/20/2024

Proposal Number 1101-IND-2113715 Confidentiality Notice: This proposal and any associated document(s) are privileged and confidential and are intended for the sole use of the addressee(s). They cannot be used, circulated, duplicated, quoted, or otherwise referred to or disclosed to third parties for any reason without the written consent of an Officer of Western Oilfields Supply Company dba/Rain for Rent. If you have received this information in error, please immediately contact us at info@rainforrent.com.

Liquid Ingenuity®

Quote Agreement

If Customer has entered into a Master Service Agreement with Rain for Rent and there is a conflict between these terms and conditions of this Quotation Agreement and the Customer's Master Service Agreement, then the terms and conditions in the Customer's Master Service Agreement signed by Rain for Rent will prevail. Availability of products and services is subject to change without notice. Payment terms are net 30 days from invoice date. Interest at the rate of 18% per year shall be charged on any past due invoice. A Fuel Surcharge will be calculated and invoiced based on the diesel fuel price as published by the Department of Energy on https://www.eia.gov/petroleum/gasdiesel An Environmental Recovery Fee shall apply to all rental charges invoiced for the duration of the rental pursuant to this quote/Estimate to help offset direct and indirect costs associated with regulatory compliance, obtaining permits, and obtaining licenses. California Air Quality Fee will be added to the cost of diesel pumps used in California only. This is a State mandated fee. Customer is prohibited from deducting retention from Rain for Rent invoices and charging Rain for Rent liquidated damages. Customer is responsible for flushing and cleaning tanks, roll off boxes, pipelines, pumps, filters and other Rain for Rent equipment prior to return unless specifically agreed to by both parties in writing. The Terms and Conditions of the Rain For Rent Rental and Hazardous Material and/or Non-Hazardous Waste Agreement, Credit Application/Master Rental & Sales Agreement, Invoice and this Quotation (also known as the Rain for Rent Rental/Sale Estimate as may be referenced in any Master Service Agreement, Blanket Purchase Order, or any other contractual document executed between the parties) contain the complete and final agreement between Rain for Rent and Customer and no other agreement in any way modifying or adding to any of said Terms and Conditions will be binding upon Rain for Rent unless made in writing and signed by a Rain for Rent Corporate Officer or Rain for Rent authorized representative. The Customer cannot alter the equipment without Rain for Rent's prior written approval. Customer is responsible for equipment, repairs, maintenance and damage, excluding normal wear and tear or damage caused by Rain for Rent. Rain for Rent will service all engine driven equipment at 400 hours of runtime or as required by manufacturer specifications, if less than 400 hours. Labor will be billed on a time and materials basis, portal to portal from nearest Rain for Rent location. Prorated billing will occur if rental is returned prior to 400 hours. All returned equipment is subject to inspection by Rain for Rent personnel. Damages and accrued rent will be invoiced to Customer while equipment is out of service for repairs. The Customer is responsible for damage caused by reactive, corrosive or abrasive material; including, but not limited to sand, sodium hydroxide, chlorine, and acids. Customer must notify Rain for Rent immediately of any spill so that any necessary repairs to the system can be made and to minimize service interruption. The Customer assumes all risks of loss due to operation and use of the equipment. Customer will provide "all risk" property insurance for rented equipment. Customer shall pay Rain for Rent additional expenses caused by unforeseen or changing conditions, including, but not limited to, soil, underground conditions, rock formations, environmental conditions, weather events, regulations or restrictions, hard pan, boulders, cesspools, gas lines, waterlines, drain pipes, underground electrical conduits or other above ground or underground obstructions. All equipment rented or used products sold are provided "AS IS, WHERE IS" in their present condition. Rain for Rent makes no warranties, expressed or implied of any kind whatsoever with respect to the equipment or products. Sold equipment is not to be rented. Customer agrees that customer is renting equipment or purchasing used products based on their judgment and evaluation, without reliance upon any statements of representations by Rain for Rent, and that Rain for Rent is not responsible for any defects in their operation or for any repairs, parts or services, unless otherwise noted. All new products sold are provided without warranty beyond the terms of such warranty offered by the manufacturer, if any. Customer must comply with all original manufacturer's terms and conditions for any warranty claims that may arise. Neither Rain for Rent nor the manufacturer warranties the product if it has failed due to corrosion, misuse or damage; (2) it has been altered, repaired or modified in any way that would adversely affect its operation; or (3) it was installed or operated other than in accordance with manufacturer's operating instructions. Products supplied by Rain for Rent are warranted to be free from any defect in workmanship and material under conditions of normal use and service. Rain for Rent's obligation under this warranty is limited to replacing or repairing at the designated manufacturer's or Rain for Rent facility any part or parts returned to it with transportation charges prepaid, which Rain for Rent determines in its sole discretion to be defective. This Quotation excludes any additional costs to Rain for Rent associated with Owner Controlled Insurance (OCIP) or WRAP insurance programs that will be added to Rain for Rent's prices. De-watering, Roll-off, Vacuum boxes and similar equipment are not liquid tight. Rentee accepts full responsibility for all losses, damages and costs caused by or arising out of spills, leakage or discharge from this equipment. Rain for Rent will not be held liable for any structural or soils subsidence. This Quotation is valid for 30 days and is subject to credit approval. Rain for Rent will take every effort to protect our customers and employees. Due to the current pandemic, all quoted equipment and services are subject to delay, change, or unilateral cancelation by Rain for Rent. Please be assured every effort will be made to execute the quote as written. The customer is responsible to inform Rain for Rent of any jobsite hazards, precautions, or entry requirements relating to the Corona Virus prior to Rain for Rent personnel going onsite to perform work or deliver equipment. This includes informing Rain for Rent if anyone at the jobsite has tested positive and provide a list of actions taken to protect Rain for Rent personnel.

Rental Protection Plan Program Agreement

If you elect to maintain All Risk Property Insurance coverage, and the certificate of insurance You provide to Rain for Rent to evidence Your insurance coverage expires or is cancelled for any reason, You agree Rain for Rent may charge RPP for Your rentals until such time as You provide an acceptable and valid certificate of insurance to Rain for Rent. This Rental Protection Plan Program Agreement (this "RPP Agreement") is entered into between the undersigned Rentor and Rentee in relation to the Master Rental and Sales Agreement (MRSA) between Rentor and Rentee. If Rentee has checked or initialed, as applicable, the Rental Protection Plan Program (the "RPP Program") box on the quote, then Rentee has opted-in to the RPP Program and this RPPP Agreement shall supplement the MSRA whether or not executed by Rentee. Rentee understands and agrees that the RPP Program is not insurance and that the RPP Program provides only limited coverage, as described below.1.Cost; Deductible; Maximum Coverage; Rentee shall pay a fee equal to 15 percent (15%) of the rental charge for each covered item, which fee shall be listed on each invoice during which period Rentee has opted to participate in the RPP Program. In the event of a Covered Occurrence, as defined below, Rentee shall further be responsible for the lesser of $500 or 10 percent (10%) of the total loss, as a deductible. The maximum coverage available under the RPP Program is $150,000 per Covered Occurrence, whether or not there is more than one piece of equipment involved in the occurrence.2.Coverage; The RPP Program provides coverage only for losses involving Covered Equipment, as defined below, in the following instances: fire that was not caused by Rentee's gross negligence or willful misconduct; theft for which a police report was filed, and that occurred despite Rentee's reasonable precautions to protect and secure the covered equipment; and vandalism for which a police report was filed (individually, "Covered Occurrence," and collectively, "Covered Occurrence"). The RPP Program provides coverage only for the following types of equipment: pumps, electric submersible pumps, tanks, generators, light towers, filtration, boxes, heaters, spillguards, safety products, sprinklers, hoses, pipe, valves and fittings ("Covered Equipment"). Coverage does not extend to any equipment not owned by Rentor such as re-rented equipment.3.Exclusions; The RPP program does not cover any equipment or event of loss that is not specifically described in Section 2.Without limiting the foregoing, the RPP Program does not provide coverage for the following: misuse of equipment; willful abuse of equipment; failure to maintain equipment; failure to secure items from theft (including but not limited to failing to store items in a fenced, locked area or failing to maintain personnel on site); damage or theft while in transit to or from a jobsite; corrosion from any source; any damage caused by named storm events; any instance that occurs while the account is not in good standing, such as a default as defined in the MRSA or upon written notice of non-payment; and any occurrence not reported to Rentor within 24 hours after the occurrence. The RPP program does not provide coverage for: electronic equipment (controls, instrumentation, and wiring), flow meters, water meters, wheel wash systems & accessories, Freezesentry items, or tires.4.Claims; All claims must be submitted within 24 hours of the Covered Occurrence. Rentor's mechanic will inspect the equipment following any claim. The mechanic's findings as to the cause of the damage and cost of repair will be final. In the event of a theft or vandalism, Rentee must also provide supporting evidence that the site was secured at the time of loss.

Proposal Number 1101-IND-2113715 Confidentiality Notice: This proposal and any associated document(s) are privileged and confidential and are intended for the sole use of the addressee(s). They cannot be used, circulated, duplicated, quoted, or otherwise referred to or disclosed to third parties for any reason without the written consent of an Officer of Western Oilfields Supply Company dba/Rain for Rent. If you have received this information in error, please immediately contact us at info@rainforrent.com.

Liquid Ingenuity®

Emergency Determination Form WW AO Support

Final Audit Report 2024-04-04

Created:	2024-04-03
By:	Kristy Miera (kamiera@santafenm.gov)
Status:	Signed
Transaction ID:	CBJCHBCAABAAf0L7Wg8VU-YEpL4sCq3jWDcINOsdtZl3

"Emergency Determination Form WW AO Support" History

Document created by Kristy Miera (kamiera@santafenm.gov)
2024-04-03 - 10:59:58 PM GMT

Document emailed to Travis Dutton-Leyda (tkduttonleyda@santafenm.gov) for signature
2024-04-03 - 11:02:57 PM GMT

Document emailed to John Dupuis (jedupuis@santafenm.gov) for signature
2024-04-03 - 11:02:57 PM GMT

Document emailed to Marcos Martinez (mdmartinez@santafenm.gov) for signature
2024-04-03 - 11:02:57 PM GMT

Document emailed to jwblair@santafenm.gov for signature
2024-04-03 - 11:02:57 PM GMT

Document emailed to EMILY OSTER (ekoster@santafenm.gov) for signature
2024-04-03 - 11:02:57 PM GMT

Email viewed by Marcos Martinez (mdmartinez@santafenm.gov)
2024-04-03 - 11:03:35 PM GMT

Document e-signed by Marcos Martinez (mdmartinez@santafenm.gov)
Signature Date: 2024-04-03 - 11:03:48 PM GMT - Time Source: server

Email viewed by Travis Dutton-Leyda (tkduttonleyda@santafenm.gov)
2024-04-03 - 11:13:44 PM GMT

Document e-signed by Travis Dutton-Leyda (tkduttonleyda@santafenm.gov)
Signature Date: 2024-04-03 - 11:13:54 PM GMT - Time Source: server

Email viewed by jwblair@santafenm.gov
2024-04-04 - 0:02:24 AM GMT

Signer jwblair@santafenm.gov entered name at signing as John Blair
2024-04-04 - 0:09:49 AM GMT

Document e-signed by John Blair (jwblair@santafenm.gov)
Signature Date: 2024-04-04 - 0:09:51 AM GMT - Time Source: server

Document e-signed by John Dupuis (jedupuis@santafenm.gov)
E-signature obtained using URL retrieved through the Adobe Acrobat Sign API
Signature Date: 2024-04-04 - 4:44:29 PM GMT - Time Source: server

Email viewed by EMILY OSTER (ekoster@santafenm.gov)
2024-04-04 - 4:46:21 PM GMT

Document e-signed by EMILY OSTER (ekoster@santafenm.gov)
Signature Date: 2024-04-04 - 4:49:48 PM GMT - Time Source: server

Agreement completed.
2024-04-04 - 4:49:48 PM GMT

CITY OF SANTA FE

Date: September 12, 2024

To: Mayor Alan Webber and Governing Body

Via: John Dupuis, Director, Public Works

From: Steve Walker, Program Manager, Wastewater Emergency Procurement

Subject: Paseo Real Water Reclamation Facility Emergency Determination and Administrative Order Response

Vendor Name: AquaSight LLC

Vendor Number: 10422

ITEM AND ISSUE:
The Public Works Department respectfully request your review and approval of this emergency determination and administrative order response for software services provided by AquaSight LLC. We request for the approval of this professional services contract in the total amount not to exceed $350,000.00 for software services over a period of three years from the date of final signature. AquaSight LLC will provide this service for the Public Works Department, Wastewater Division, Paseo Real Wastewater Reclamation Facility. (J. Steven Walker, jswalker@santafenm.gov, 5052509883.)

Action Requested: Request approval of the contract with AquaSight LLC. in the amount of $350,000.00.

BACKGROUND AND SUMMARY:
In reference to the Paseo Real Water Reclamation Facility Administrative Order Emergency Project, the Public Utilities Department has submitted an Emergency Determination Form for emergency procurement to implement a comprehensive plan that provides interim corrective measures and for the long-term success in operating and managing the Paseo Real Water Reclamation Facility (PRWRF) necessary to ensure compliance with NPDES and Discharge Permits within the shortest possible time. The referenced Administrative Order (AO), which the City received an updated docket CWA-06-2024-1765 on 10 July, 2024 from the U.S. Environmental Protection Agency (EPA) Region 6, is attached and requires within 30 days the submission of the comprehensive written plan for the elimination of the violations within the shortest possible time, as well as measures to prevent these or similar violations from recurring.

The scope of work from each vendor included with the Emergency Determination Form, and attached, is a natural progression of the extensive evaluation and improvements-initiated April 2024 and would have been implemented over a reasonable timeframe. The emergency procurement, this request for authorization, and accompanying Budget Adjustment Request (BAR) are responsive to the requirement for the elimination of the violations within the shortest possible time. These actions included as part of the comprehensive plan will clearly communicate our commitment to complete this project

within the shortest possible time, averts unnecessary enforcement escalation, and begins to restore the trust of the public and our regulators.

The comprehensive plan focuses on improving current data collection, regulatory compliance, operational knowledge management / transfer, and management practices at the PRWRF, combined with selective capital improvements to existing PRWRF facilities. This comprehensive plan can be broken down into the following nine (10) steps:

1. Provide sampling and regulatory support to ensure compliance with existing permits.
2. Support the City's external communications and regularly establish weekly updates to improve communication and restore trust with Regulators.
3. Build a comprehensive base of knowledge & management tools / decision trees to guide PRWRF staff in day-to-day operations and management of the facility.
4. Improve PRWRF laboratory practices, data management, workflows, and communications for all testing performed to ensure regulatory compliance and/or support treatment operations.
5. Provide an inventory of all PRWRF instrumentation, calibration practices, data flows, and uses of information currently collected, and rectify gaps to improve process monitoring and control.
6. Develop a model for treatment operations using open-source software that integrates information available from lab test results and real-time supervisory control and data acquisition (SCADA) data.
7. Develop continuous modeling results incorporated into an advanced SCADA interface at the PRWRF to simulate and help optimize treatment plant operations and management.
8. Develop tools for simulation, testing, and operation of proposed changes to plant operations and enable remote operational support for emergency conditions.
9. Short-term treatment plant improvement projects. Examples of these limited scope projects include installing a new mechanical bar screen the already procured by the City, restoring two (2) former traveling bridge filter systems to working condition, or portable container based sand filtration equipment and related pumping capability.
10. Additional support to complete the items above including process engineering alternatives development and review, project management and scheduling support, construction related support and services, training support, and related items or equipment.

Below is a list of the contractors that as of 4 April 2024 had provided a proposal/scope of work, the amount of the prospective contract, and the term of the prospective contract that, once authorized, would be negotiated, and executed as quickly as possible.

A. Name of Contractor: AquaSight
Amount of prospective contract: $350,000.00
Term of prospective contract: Three years

B. Name of Contractor: Great Western Electrical
Amount of prospective contract: $155,690.08
Term of prospective contract: One year

C. Name of Contractor: Carollo Engineers, Inc.
Amount of prospective contract: $60,000.00
Term of prospective contract: One year

D. **Name of Contractor: ITSQUEST Staffing**
Amount of prospective contract: $264,463.70
Term of prospective contract: One year and two months

E. **Name of Contractor: Hazen and Sawyer**
Amount of prospective contract: $2,718,000.00
Term of prospective contract: 2.5 years

F. **Name of Contractor: A.A.C. Construction, LLC**
Amount of prospective contract: $2,465,837.04
Term of prospective contract: Two Years

G. **Name of Contractor: Molzen Corbin**
Amount of prospective contract: $180,000.00
Term of prospective contract: Two Years

H. **Name of Contractor: Rain for Rent (Western Oilfields Supply Co.)**
Amount of prospective contract: $1,000,000
Term of prospective contract: Three Years

The current total prospective contract amount was $7,226,496.28. The total budget amount requested on 4 April, 2024 was $8,000,000. Due to the critical nature of the funding and schedule for completion of the projects, the Public Utilities Department requested authorization to the City Manager to negotiate and execute all necessary contracts and purchase orders to expedite project initiation. Once a contract was executed, the results were reported to the Governing Body.

PROCUREMENT METHOD: Emergency

Chief Procurement Officer Approval: _____ **Date:** Oct 8, 2024

Comment/Exceptions: Emergency determination on file

Supporting Information:
The FY25 Munis contract number is 3250176

$$$$$ SOURCE/REVENUE: ☒**Expense** ☐**Revenue**

The funding source is:
Fund Name/Number: WW Entrprs/Fund 500
Munis Org Name/Number: CIP-5000375
Munis Object Name/Number: WIP Const/572970

If the project is grant funded? List grant award number: *n/a*

Grant Manager / Accounting Officer Approval: n/a **Date:**

Comment/Exceptions: _____

Project Ledger #: _____

Budget Officer Approval: Andy Hopkins **Date:** Oct 7, 2024

Comment/Exceptions: _____

CAPITAL ASSET (will this procurement result in a tangible item that costs more than $5,000?):

☐**Yes |** ☒ **No**

 # (if known): _____

Repair or Replacement of Existing Equipment:

☐**Yes |** ☒ **No**
If yes -> ☐**Repair |** ☐ **Replacement**

Please explain: _____

Capital Project:
(New and improvement projects that are going to cost $10,000 or more)
☒ **Yes |** ☐ **No**

Project Ledger #: WWM245002
Anticipated length of project: Three Years

Asset Manager Approval: _____ **Date:** _____

Comment/Exceptions: _____

Department Approvals:
IT Components: ☒ **Yes |** ☐ **No**
Vehicles: ☐ **Yes |** ☒ **No**
Facilities, Furniture, Fixtures, Equipment: ☐ **Yes |** ☒ **No**

Approval: _____ **Title:** _____ **Date**: _____

Approval: _____ **Title:** _____ **Date**: _____

Comment & Exceptions:

Department Contract Administrator Contact Info: Linda McAllister,
lmmacallister@santafenm.gov , 505-577-6731

ATTACHMENTS:
Administrative Order, Vendor's Quote, Santa Fe Business License, Certificate of Liability Insurance, Professional/General Services Contract, Horizons declination, and Emergency Determination

Item #: 24-0643
Munis Contract #:3204657
SWPA/GSA/Coop/RFP/ITB#: Emergency

CITY OF SANTA FE

PROFESSIONAL SERVICES CONTRACT

THIS CONTRACT is made and entered into by and between the City of Santa Fe, New Mexico, hereinafter referred to as the "City," and **Aquasight LLC.**, hereinafter referred to as the "Contractor," and is effective as of the date set forth below upon which it is executed by the Parties.

RECITALS

WHEREAS, the Chief Procurement Officer of the City has made the determination that this Agreement is in accordance with the provisions of the New Mexico Procurement Code (NMSA 1978, 13-1-28 et seq.) pursuant to NMSA 1978, section 13-1-127 and

WHEREAS, the Contractor is one of such requisite and qualifications and is willing to engage with the City for professional services, in accordance with the terms and conditions hereinafter set out, and the Contractor understanding and consenting to the foregoing is willing to render such professional services as outlined in the Agreement; and

The City and the Contractor hereby agree as follows:

1. Scope of Work

The Contractor shall perform all the work required by this contract and any amendments thereof to build upon the improvements initiated by the City in April 2023. The emergency procurement, this request for authorization, and accompanying Budget Adjustment Request (BAR) established by the City respond to the requirement that the City eliminate violations identified by the EPA and NMED within the shortest possible time. These actions by the City, included as part of a comprehensive plan, will demonstrate the City's commitment to complete this project within the shortest possible time in the most efficient way possible.

The Contractor's scope of work includes support to the City for specific comprehensive plan items #6, #7,and #8 as noted below. The City's comprehensive plan focuses on improving current data collection, regulatory compliance, operational knowledge management / transfer, and management practices at the Paseo Real Water Reclamation Facility (PRWRF), combined with selective capital improvements to existing PRWRF facilities.

The City's comprehensive plan is broken down into the following ten (10) steps, of which the Contractor is providing support only for items #6, #7, and #8 (other items noted are by others):

1. Provide sampling and regulatory support to ensure compliance with existing permits.

2. Support the City's external communications and regularly established

weekly updates to improve communication with Regulators.

3. Build a comprehensive base of knowledge & management tools / decision trees to guide PRWRF staff in day-to-day operations and management of the facility.

4. Improve PRWRF laboratory practices, data management, workflow, and communications for all testing performed to ensure regulatory compliance and/or support treatment operations.

5. Provide an inventory of all PRWRF instrumentation, calibration practices, data flows, and uses of information currently collected, and rectify gaps to improve process monitoring and control.

6. Develop a model for treatment operations using commercially available software that integrates information available from lab test results and real-time supervisory control and data acquisition (SCADA) data.

7. Develop continuous modeling results incorporated into an advanced SCADA interface at the PRWRF to simulate and help optimize treatment plant operations and management.

8. Develop tools for simulation, testing, and operation of proposed changes to plant operations and enable remote operational support for emergency conditions.

9. Short-term treatment plant improvement projects. Examples of these limited scope projects include installing a new mechanical bar screen the already procured by the City, restoring two (2) former traveling bridge filter systems to working condition, or portable container-based sand filtration equipment and related pumping capability.

10. Additional support to complete the items above including process engineering alternatives development and review, project management and scheduling support, construction related support and services, training support, and related items or equipment, as described in the Contract Documents.

The Contractor's scope of work includes support only for plan items #6, #7,and #8 above. Other noted items are not applicable to the Contractor's work nor to this Scope of Work.

The Contractor's Scope of work will incorporate the following general tasks:

The City of Santa Fe Public Utilities Department is implementing a strategic initiative to further improve treatment plant effluent performance and reduce operating and maintenance costs by leveraging Aquasight's APOLLO™. The overall goal of this project is to implement a modular real-time advanced analytics and Copilot™ system for liquid unit processes that will support operator success for meeting permit discharge limits and support operational efficiencies for liquid processes that consume the greatest amount of power and chemicals. APOLLO™ will support the City's goals of continuous and measured progress towards the PRWRF optimization goals over time.

In pursuit of this vision, Aquasight's APOLLO™ software is proposed to assist the City of Santa Fe by:

- Providing a one-stop integrated intelligence dashboarding and analysis solution.
- Integrating a copilot system with built in smart advisors.
- Driving energy and chemical savings and enabling fine tuning of control setpoints.
- Improving daily plant workflow and empowering a data driven decision culture.
- Storing operator knowledge to de-risk operator churn and retirements.
- Providing management visibility through remote off-site access.
- Highlighting compliance risks while providing quick access to process data.
- Enabling predictive maintenance of aeration and disinfection equipment.
- Providing robust tools for workforce training on plant performance at various flows and loads.
- Providing quick access of data for planning and engineering teams.
- Including monitoring and notifications on complex parameters.

Generally, the scope of this project includes onboarding the PRWRF to Aquasight's APOLLO™ software equipped with seven (7) modules. The SCOPE OF WORK may change in the future depending on the needs of the plant. The final SOW will be determined in collaboration with the Utility team.

Additionally, Aquasight will review data sources, data completeness, and instrumentation coverage for the PRWRF. We will make recommendations for additional instrumentation as may be necessary to optimize the data rich environment necessary for an optimized process solution.
The project goals described above will be completed through the following tasks:

Task 0 – Project Management
Task 1 – Data Polling
Task 2 – Site Visit and Plant Review Including Instrumentation Review and Recommendations
Task 3 – Aeration Onboarding
Task 4 – Secondary Clarifier & RAS/WAS Pumping Onboarding
Task 5 – UV Disinfection/Chlorination/Dechlorination Onboarding
Task 6 – Default Module Configuration
Task 7 – Training and Adoption

See Exhibit A for details of the Scope of Work

2. <u>Standard of Performance; Licenses</u>

A. The Contractor does hereby accept its designation as a professional service, rendering services related to Engineering and Operational Support for the City, as set forth in this Agreement. The Contractor represents that Contractor possesses the personnel, experience, and knowledge necessary to perform the services described under this Contract.

B. The Contractor agrees to obtain and maintain throughout the term of this Contract, all applicable professional and business licenses required by law, for itself, its employees, agents, representatives, and subcontractors.

3. Compensation

A. The City shall pay to the Contractor in full payment for services satisfactorily performed, such compensation not to exceed three hundred and fifty thousand dollars ($350,000.00), excluding gross receipts tax. **The total amount payable to the Contractor under this Contract, excluding gross receipts tax, shall not exceed three hundred and fifty thousand dollars ($350,000.00). This amount is a maximum and not a guarantee that the work assigned to be performed by Contractor under this Contract shall equal the amount stated herein. The parties do not intend for the Contractor to continue to provide services without compensation when the total compensation amount is reached. Contractor is responsible for notifying the City when the services provided under this Contract reach the total compensation amount. In no event will the Contractor be paid for services provided in excess of the total compensation amount without this Contract being amended in writing prior to those services in excess of the total compensation amount being provided.**

B. Payment is subject to availability of funds pursuant to the Appropriations Paragraph set forth below and to any negotiations between the parties from year to year pursuant to Paragraph 1, Scope of Work, and to approval by the City. All invoices MUST BE received by the City no later than thirty 30) days after the termination of the Fiscal Year in which the services were delivered. Invoices received after such date WILL NOT BE PAID.

C. Payment in future fiscal years is subject to availability of funds pursuant to the Appropriations Paragraph set forth below and to any negotiations between the parties from year to year pursuant to Paragraph 1, Scope of Work, and to approval by the City. All invoices MUST BE received by the City no later than thirty (30) days after the termination of the Fiscal Year in which the services were delivered. Invoices received after such date WILL NOT BE PAID.)

D. Contractor must submit a detailed statement accounting for all services performed and expenses incurred. If the City finds that the services are not acceptable, within thirty days after the date of receipt of written notice from the Contractor that payment is requested, it shall provide the Contractor a letter of exception explaining the defect or objection to the services, and outlining steps the Contractor may take to provide remedial action. Upon certification by the City that the services have been received and accepted, payment shall be tendered to the Contractor within thirty days after the date of acceptance. If payment is made by mail, the payment shall be deemed tendered on the date it is postmarked.

E. If the City fails to pay the contractor within twenty-one days after receipt of an undisputed request for payment, the City shall pay interest to the contractor beginning on the twenty-second day after payment was due, computed at one and one-half percent of the undisputed amount per month or fraction of a month until the payment is issued. If the City receives an improperly completed invoice, the City shall notify the sender of the invoice within seven days of receipt in what way the invoice is improperly completed, and the owner has no further duty to pay on the improperly completed invoice until it is resubmitted as complete.

F. **Notice of Extended Payment Provision For Grant Funded Contracts**. This contract allows the owner to make payment within 45 days after submission of an undisputed request for payment.

4. Term

THIS CONTRACT SHALL NOT BECOME EFFECTIVE UNTIL APPROVED BY THE CITY. This Contract shall terminate **three (3) years from date of final signature** unless terminated pursuant to paragraph 5 (Termination), or paragraph 6 (Appropriations). The City reserves the right to renew this contract on an annual basis by mutual agreement not to exceed a total of four (4) years in accordance with NMSA 1978, Sections 13-1-150 through 152.

5. Termination

A. Grounds. The City may terminate this Agreement for convenience or cause. For contracts within their authority, the City Manager or their designee is authorized to provide the notice of termination, otherwise such notice of termination shall be provided by the Mayor or their designee as authorized by the Governing Body. The Contractor may only terminate this Agreement based upon the City's uncured, material breach of this Agreement.

B. Notice; City Opportunity to Cure.

1) The City shall give Contractor written notice of termination at least thirty (30) days prior to the intended date of termination.

2) Contractor shall give City written notice of termination at least thirty (30) days prior to the intended date of termination, which notice shall (i) identify all the City's material breaches of this Agreement upon which the termination is based and (ii) state what the City must do to cure such material breaches. Contractor's notice of termination shall only be effective (i) if the City does not cure all material breaches within the thirty (30) day notice period or (ii) in the case of material breaches that cannot be cured within thirty (30) days, the City does not, within the thirty (30) day notice period, notify the Contractor of its intent to cure and begin with due diligence to cure the material breach.

3) Notwithstanding the foregoing, this Agreement may be terminated immediately upon written notice to the Contractor (i) if the Contractor becomes unable to perform the services contracted for, as determined by the City; (ii) if, during the term of this Agreement, the Contractor is suspended or debarred by the City; or (iii) the Agreement is terminated pursuant to Paragraph 6, "Appropriations", of this Agreement.

C. Liability. Except as otherwise expressly allowed or provided under this Agreement, the City's sole liability upon termination shall be to pay for acceptable work performed prior to the Contractor's receipt or issuance of a notice of termination; provided, however, that a notice of termination shall not nullify or otherwise affect either party's liability for pre-termination defaults under or breaches of this Agreement. The Contractor shall submit an invoice for such work within thirty (30) days of receiving or sending the notice of termination. *THIS PROVISION IS NOT EXCLUSIVE AND DOES NOT WAIVE THE CITY'S OTHER LEGAL RIGHTS AND REMEDIES CAUSED BY THE CONTRACTOR'S DEFAULT/BREACH OF THIS AGREEMENT.*

6. Appropriations

The terms of this Contract are contingent upon sufficient appropriations and authorization being made by the Governing Body for the performance of this Contract. If sufficient appropriations and authorization are not made by the Governing Body, this Contract shall terminate immediately upon written notice being given by the City to the Contractor. The City's decision as to whether sufficient appropriations are available shall be accepted by the Contractor and shall be final. If the City proposes an amendment to the Contract to unilaterally reduce funding, the Contractor shall have the option to terminate the Contract or to agree to the reduced funding, within thirty (30) days of receipt of the proposed amendment.

7. Status of Contractor

The Contractor and its agents and employees are independent contractors performing professional services for the City and are not employees of the City. The Contractor and its agents and employees shall not accrue leave, retirement, insurance, bonding, use of City vehicles, or any other benefits afforded to employees of the City as a result of this Contract. The Contractor acknowledges that all sums received hereunder are reportable by the Contractor for tax purposes, including without limitation, self-employment and business income tax. The Contractor agrees not to purport to bind the City unless the Contractor has express written authority to do so, and then only within the strict limits of that authority.

8. Assignment

The Contractor shall not assign or transfer any interest in this Contract or assign any claims for money due or to become due under this Contract without the prior written approval of the City.

9. Subcontracting

The Contractor shall not subcontract any portion of the services to be performed under this Contract without the prior written approval of the City. No such subcontract shall relieve the primary Contractor from its obligations and liabilities under this Contract, nor shall any subcontract obligate direct payment from the City.

10. Release

Final payment of the amounts due under this Contract shall operate as a release of the City, its officers and employees from all liabilities, claims and obligations whatsoever arising from or under this Contract.

11. Confidentiality

Any confidential information provided to or developed by the Contractor in the performance of this Contract shall be kept confidential and shall not be made available to any individual or organization by the Contractor without the prior written approval of the City.

12. Product of Service -- Copyright

Any product that is developed by Aquasight remains the property of Aquasight. The City only has the license to use these products for the agreed duration under the terms of the Aquasight Subscription Agreement incorporated herein to this contract. This includes any editions/deletions/ modifications done to the Aquasight product.

13. Conflict of Interest; Governmental Conduct Act

A. The Contractor represents and warrants that it presently has no interest and, during the term of this Contract, shall not acquire any interest, direct or indirect, which would conflict in any manner or degree with the performance or services required under the Contract.

B. The Contractor further represents and warrants that it has complied with, and, during the term of this Contract, will continue to comply with, and that this Contract complies with all applicable provisions of the Governmental Conduct Act, Chapter 10, Article 16 NMSA 1978.

C. Contractor's representations and warranties in Paragraphs A and B of this Article 12 are material representations of fact upon which the City relied when this Contract was entered into by the parties. Contractor shall provide immediate written notice to the City if, at any time during the term of this Contract, Contractor learns that Contractor's representations and warranties in Paragraphs A and B of this Article 12 were erroneous on the effective date of this Contract or have become erroneous by reason of new or changed circumstances. If it is later determined that Contractor's representations and warranties in

Paragraphs A and B of this Article 12 were erroneous on the effective date of this Contract or have become erroneous by reason of new or changed circumstances, in addition to other remedies available to the City and notwithstanding anything in the Contract to the contrary, the City may immediately terminate the Contract.

D. All terms defined in the Governmental Conduct Act have the same meaning in this section.

14. Amendment

A. This Agreement shall not be altered, changed, or amended except by instrument in writing executed by the parties hereto and all other required signatories.

B. If the City proposes an amendment to the Contract to unilaterally reduce funding due to budget or other considerations, the Contractor shall, within thirty (30) days of receipt of the proposed Amendment, have the option to terminate the Contract, pursuant to the termination provisions as set forth in Article 4 herein, or to agree to the reduced funding.

15. Entire Agreement.

This Agreement, together with any other documents incorporated herein by reference and all related Exhibits and Schedules constitutes the sole and entire agreement of the Parties with respect to the subject matter of this Agreement, and supersedes all prior and contemporaneous understandings, agreements, representations, and warranties, both written and oral, with respect to the subject matter. In the event of any inconsistency between the statements in the body of this Agreement, and the related Exhibits and Schedules, the statements in the body of this Agreement shall control.

16. Merger

This Contract incorporates all the Agreements, covenants and understandings between the parties hereto concerning the subject matter hereof, and all such covenants, agreements, and understandings have been merged into this written contract.

No prior Agreement or understanding, oral or otherwise, of the parties or their agents shall be valid or enforceable unless embodied in this Contract.

17. Penalties for violation of law

NMSA 1978, sections 13-1-28 through 13-1-199, imposes civil and criminal penalties for its violation. In addition, the New Mexico criminal statutes impose felony penalties for illegal bribes, gratuities, and kickbacks.

18. Equal Opportunity Compliance

The Contractor agrees to abide by all federal and state laws and rules and regulations, and Santa Fe City Code, pertaining to equal employment opportunity. In accordance with all such laws of the State of New Mexico, the Contractor assures that no person in the United States shall, on the grounds of race, religion, color, national origin, ancestry, sex, age, physical or mental handicap, or serious medical condition, spousal affiliation, sexual orientation or gender identity, be excluded from employment with or participation in, be denied the benefits of, or be otherwise subjected to discrimination under any program or activity performed under this Contract. If Contractor is found not to be in compliance with these requirements during the life of this Contract, Contractor agrees to take appropriate steps to correct these deficiencies.

19. Applicable Law

The laws of the State of New Mexico shall govern this Contract, without giving effect to its choice of law provisions. Venue shall be proper only in a New Mexico court of competent jurisdiction in accordance with NMSA 1978, section 38-3-2. By execution of this Contract, Contractor acknowledges and agrees to the jurisdiction of the courts of the State of New Mexico over any and all lawsuits arising under or out of any term of this Contract.

20. Workers Compensation

The Contractor agrees to comply with state laws and rules applicable to workers compensation benefits for its employees. If the Contractor fails to comply with the Workers Compensation Act and applicable rules when required to do so, this Contract may be terminated by the City.

21. Professional Liability Insurance

Contractor shall maintain professional liability insurance throughout the term of this Contract providing a minimum coverage in the amount required under the New Mexico Tort Claims Act. The Contractor shall furnish the City with proof of insurance of Contractor's compliance with the provisions of this section as a condition prior to performing services under this Contract.

22. Other Insurance

If the services contemplated under this Contract will be performed on or in City facilities or property, Contractor shall maintain in force during the entire term of this Contract, the following insurance coverage(s), naming the City as additional insured.

A. **Commercial General Liability** insurance shall be written on an occurrence basis and be a broad as ISO Form CG 00 01 with limits not less than $2,000,000 per occurrence and $2,000,000 in the aggregate for claims against bodily injury, personal and advertising injury, and property damage. Said policy shall include broad form Contractual Liability coverage and be endorsed to name the City of Santa Fe their officials, officers, employees, and agents as additional insureds.

B. **Broader Coverage and Limits**. The insurance requirements under this Contract shall be the greater of (1) the minimum coverage and limits specified in this Contract, or (2) the broader coverage and maximum limits of coverage of any insurance policy or proceeds available to the Named Insured. It is agreed that these insurance requirements shall not in any way act to reduce coverage that is broader or that includes higher limits than the minimums required herein. No representation is made that the minimum insurance requirements of this Contract are sufficient to cover the obligations of Contractor hereunder.

C. Contractor shall maintain the above insurance for the term of this Contract and name the City as an additional insured and provide for 30 days cancellation notice on any Certificate of Insurance form furnished by Contractor. Such certificate shall also specifically state the coverage provided under the policy is primary over any other valid and collectible insurance and provide a waiver of subrogation.

23. Records and Financial Audit

The Contractor shall maintain detailed time and expenditure records that indicate the date; time, nature and cost of services rendered during the Contract's term and effect and retain them for a period of three (3) years from the date of final payment under this Contract. The records shall be subject to inspection by the City. The City shall have the right to audit billings both before and after payment. Payment under this Contract shall not foreclose the right of the City to recover excessive or illegal payments.

24. Indemnification

The Contractor shall defend, indemnify and hold harmless the City from actions, proceeding, claims, demands, costs, damages, attorneys' fees and other liabilities and expenses which may arise out of the performance of this Contract, caused by the intentional negligent act or failure to act of the Contractor when notified within five (5) business days, its officers, employees, servants, subcontractors or agents, or if caused by the actions the Contractor resulting in injury or damage to persons or property during the time when the Contractor or any officer, agent, employee, servant or subcontractor thereof has or is performing services pursuant to this Contract. If any action, suit or proceeding related to the services performed by the Contractor or any officer, agent, employee, servant or subcontractor under this Contract is brought against the Contractor, the Contractor shall, as soon as practicable but no later than two (2) days after it receives notice thereof, notify the legal counsel of the City. The City shall indemnify, defend, and hold harmless the Contractor in the same manner, and to the same extent, as the Contractor is required to indemnify, defend, and hold harmless the City pursuant to the terms and conditions set forth in this Contract.

The Cause of action must be brought in the duration of the contract. Damages are limited to the fees paid by the City to the Contractor in the twelve (12) full calendar months immediately preceding the month in which the event giving rise to the claim occurred.

25. New Mexico Tort Claims Act

Any liability incurred by the City of Santa Fe in connection with this Contract is subject to the immunities and limitations of the New Mexico Tort Claims Act, Section 41-4-1, et. seq. NMSA 1978, as amended. The City and its "public employees" as defined in the New Mexico Tort Claims Act, do not waive sovereign immunity, do not waive any defense and do not waive any limitation of liability pursuant to law. No provision in this Contract modifies or waives any provision of the New Mexico Tort Claims Act.

26. Invalid Term or Condition

If any term or condition of this Contract shall be held invalid or unenforceable, the remainder of this Contract shall not be affected and shall be valid and enforceable.

27. Enforcement of Contract

A party's failure to require strict performance of any provision of this Contract shall not waive or diminish that party's right thereafter to demand strict compliance with that or any other provision. No waiver by a party of any of its rights under this Contract shall be effective unless express and in writing, and no effective waiver by a party of any of its rights shall be effective to waive any other rights.

28. Notices

Any notice required to be given to either party by this Contract shall be in writing and shall be delivered in person, by courier service or by U.S. mail, either first class or certified, return receipt requested, postage prepaid, as follows:

To the City:
City of Santa Fe
Attn: P. Fred Heerbrandt, P.E.
505-955-4623
pfheerbrandt@santafenm.gov

To the Contractor:
Jonathan Hasson
1650 W. Big Beaver Road
Troy, MI 48084
info@aquasight.io

29. Authority

If Contractor is other than a natural person, the individual(s) signing this Contract on behalf of Contractor represents and warrants that he or she has the power and authority to bind Contractor, and that no further action, resolution, or approval from Contractor is necessary to enter a binding contract.

30. Non-Collusion

In signing this Agreement, the Contractor certifies the Contractor has not, either directly or indirectly, entered into action in restraint of free competitive bidding in connection with this offer submitted to the City's Chief Procurement Officer.

31. Default/Breach

In case of Default and/or Breach by the Contractor, for any reason whatsoever, the City may procure the goods or services from another source and hold the Contractor responsible for any resulting excess costs and/or damages, including but not limited to, direct damages, indirect damages, consequential damages, special damages, and the City may also seek all other remedies under the terms of this Agreement and under law or equity.

32. Equitable Remedies

The Contractor acknowledges that its failure to comply with any provision of this Agreement will cause the City irrevocable harm and that a remedy at law for such a failure would be an inadequate remedy for the City, and the Contractor consents to the City 's obtaining from a court of competent jurisdiction, specific performance, or injunction, or any other equitable relief in order to enforce such compliance. The City's rights to obtain equitable relief pursuant to this Agreement shall be in addition to, and not in lieu of, any other remedy that the City may have under applicable law, including, but not limited to, monetary damages.

33. Default and Force Majeure

The City reserves the right to cancel all, or any part of any orders placed under this Agreement without cost to the City, if the Contractor fails to meet the provisions of this Agreement and, except as otherwise provided herein, to hold the Contractor liable for any excess cost occasioned by the City due to the Contractor's default. The Contractor shall not be liable for any excess costs if failure to perform the order arises out of causes beyond the control and without the fault or negligence of the Contractor; such causes include, but are not restricted to, acts of God or the public enemy, acts of the State or Federal Government, fires, floods, epidemics, quarantine restrictions, strikes, freight embargoes, unusually severe weather and defaults of subcontractors due to any of the above, unless the City shall determine that the supplies or services to be furnished by the subcontractor were obtainable from other sources in sufficient time to permit the Contractor to meet the required delivery scheduled. The rights and remedies of the City provided in this Clause shall not be exclusive and are in addition to any other rights now being provided by law or under this Agreement.

IN WITNESS WHEREOF, the Parties have executed this Contract as of the date of the signature by the required approval authorities below.

CITY OF SANTA FE:

Alan Webber (Nov 4, 2024 17:34 MST)

ALAN WEBBER, MAYOR

CONTRACTOR:
Aquasight

Jonathan K. Hasson
Jonathan K. Hasson (Aug 29, 2024 15:49 CDT)

JONATHAN HASSON, VICE PRESIDENT

DATE: Aug 29, 2024

CRS#: 03666147003

Registration #: _____

ATTEST:

GERALYN CARDENAS, INTERIM CITY CLERK

GB MTG 10/30/2024 XIV

CITY ATTORNEY'S OFFICE:

Marcos Martinez
Marcos Martinez (Aug 29, 2024 14:52 MDT)

SENIOR ASSISTANT CITY ATTORNEY

APPROVED FOR FINANCES:

Emily K. Oster

FINANCE DIRECTOR

Attachment A

Scope of Work

Exhibit A

AQUASIGHT
INTELLIGENT WATER SOLUTIONS
1650 W. Big Beaver Road Suite 101, Troy, MI 48084

SANTA FE PUBLIC UTILITIES

PASEO REAL WATER RECLAMATION FACILITY PROCESS OPTIMIZATION PROJECT PROPOSAL

March 27, 2024

1.	Name:	**City of Santa Fe NM** Public Works Department **200 Lincoln Avenue** **Santa Fe, New Mexico 87501**
2.	Aquasight Solution:	**APOLLO 6.0 or higher for Paseo Real Water Reclamation Facility**
3.	Term:	3 Years
4.	Fees:	
	On-boarding Fee:	$200,000
	Annual Fee:	$50,000
5.	Payment Terms:	

- On-boarding fee invoiced in monthly installments during on-boarding period, beginning from the date of Notice to Proceed, for the first six (6) months as noted:
  - $50,000 for the first month
  - $33,750/month for the next four (4) consecutive onboarding months
  - Final on-boarding fee of $15,000 invoiced upon completion of On-Boarding process (month 6 billing).
- Annual fee will begin from the date of the Notice to Proceed and will be invoiced in equal annual payments of $50,000 at the beginning of each subscription year for the use of APOLLO Software technology.
- Payment terms are Net 30 days.

6. Other terms and conditions:

- On-boarding fee includes scope, deliverables, timelines described in Appendix A and B.
- On-boarding fee includes up to one client “face-to-face” visit and up to nine “virtual” project status and production meetings during the project.
- Santa Fe PWD shall provide access to equipment tags, basis of design information for the major unit operations, applicable standard operating procedures, and access to Santa Fe PWD plant operators and other specialists as outlined in Appendix C.
- Santa Fe PWD shall inform Aquasight if tag names are changed, and database connections are reconfigured for any reason.
- Data quality is the responsibility of the Santa Fe PWD, but Aquasight, however, shall provide quality control for all information and data analytics that they provide.
- Santa Fe PWD shall provide access to a computer that is on the network where source data is available with an internet connection.
- Data extraction from source system is assuming industry standard data formats and readable technologies.
- If work is performed outside of scope defined in Appendix B, then there will be additional costs charged at an hourly rate of $250/hour.
- Any delay with requested information can cause delays in timelines.
- This agreement is valid for up to fifty users, and they must have a Santa Fe PWD E-Mail ID.
- Annual fee covers the scope of services as defined in Appendix D.
- This order form is entered in accordance with and is governed by the Terms and Conditions of Use available at http://aquasight.io/Aquasight-sa-61616.pdf.

Acknowledged and Accepted by:

_____

Signature

_____

Name, Title, Date

SANTA FE PUBLIC UTILITIES

PASEO REAL WATER RECLAMATION FACILITY PROCESS OPTIMIZATION PROJECT PROPOSAL

March 27, 2024

BACKGROUND

The City of Santa Fe, NM provides wastewater collection, treatment, and disposal services for nearly 90,000 residents and businesses. The City owns and operates the 9 MGD annual average daily flow (AADF) (rated for 13 MGD) Paseo Real Water Reclamation Facility which is a conventional activated sludge plant that includes screening and sedimentation for primary treatment, oxidation ditch basins, aeration, and clarification for secondary treatment plus nitrogen reduction, and disk and sand filters, chlorination, and dechlorination for tertiary treatment before discharging into the Santa Fe River (**Figure 1**). The City recently received an Administrative Order for permit exceedances in both E. Coli and Nitrogen. As a measure to ensure improved plant effluent performance, optimize data usage and process performance, the City desires a rapidly deployable, data-driven solution for increase opportunities for successful permit compliance.

The PRWRF has adequate data for some process control, but also could benefit from additional sensors and instrumentation to make it a more data rich facility. Data is generated and stored in a variety of different systems, and many of those systems do not share/communicate data well for daily operational benefits. There is an abundance of untapped potential to integrate and mine this data using science or ML/AI-based algorithms to help with process optimization, capture energy and chemical savings, store process knowledge, create maintenance insights, and assist with troubleshooting. This will require a tool that can provide streaming analytics, smart advisors, Aquasight COPILOT™, and actionable assistance to the staff to create a data driven O&M culture.

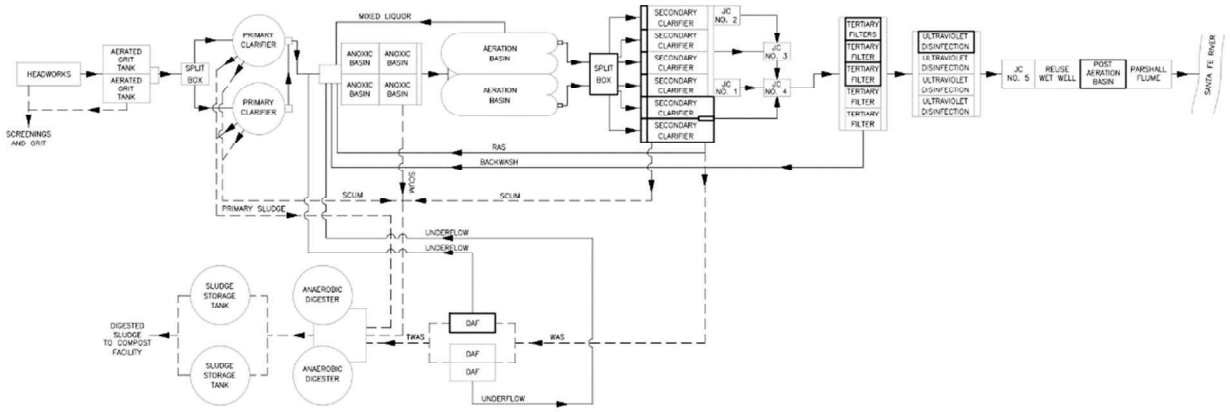

Figure 1: PRWRF Process Flow Diagram

PROJECT GOALS & EXPECTED BENEFITS

The City of Santa Fe Public Works is implementing a strategic initiative to further improve treatment plant effluent performance and reduce operating and maintenance costs by leveraging Aquasight's APOLLO™. The overall goal of this project is to implement a modular real-time advanced analytics and Copilot™ system for liquid unit processes that will support operator success for meeting permit discharge limits and support operational efficiencies for liquid processes that consume the greatest amount of power and chemicals. APOLLO™ will support the City's goals of continuous and measured progress towards the PRWRF optimization goals over time.

Benefits anticipated by implementation of the Aquasight APOLLO™ solution include:

- Deeper integration and sharing of Laboratory sampling data and insights supporting more informed operations.
- Identification of gaps in instrumentation throughout plant processes leading to a more data rich environment for improved process control, optimization, and decision making.
- Implementation of operator focused digital twin functionality allowing for improved real-time streaming insights into potential operational changes and their impacts on process performance KPIs.
- Capture of operational and institutional knowledge by providing a historical record of plant data and operational KPIs for improved new operator training and information recall.

In pursuit of this vision, Aquasight's APOLLO™ software is proposed to assist the City of Santa Fe by:

- Providing a one-stop integrated intelligence dashboarding and analysis solution.
- Integrating a copilot system with built in smart advisors.
- Driving energy and chemical savings and enabling fine tuning of control setpoints.
- Improving daily plant workflow and empowering a data driven decision culture.

- Storing operator knowledge to de-risk operator churn and retirements.
- Providing management visibility through remote off-site access.
- Highlighting compliance risks while providing quick access to process data.
- Enabling predictive maintenance of aeration and disinfection equipment.
- Providing robust tools for workforce training on plant performance at various flows and loads.
- Providing quick access of data for planning and engineering teams.
- Including monitoring and notifications on complex parameters.

Examples of the main dashboard for the aeration and secondary clarifier modules in action are provided in **Figure 2** and **Figure 3**, respectively.

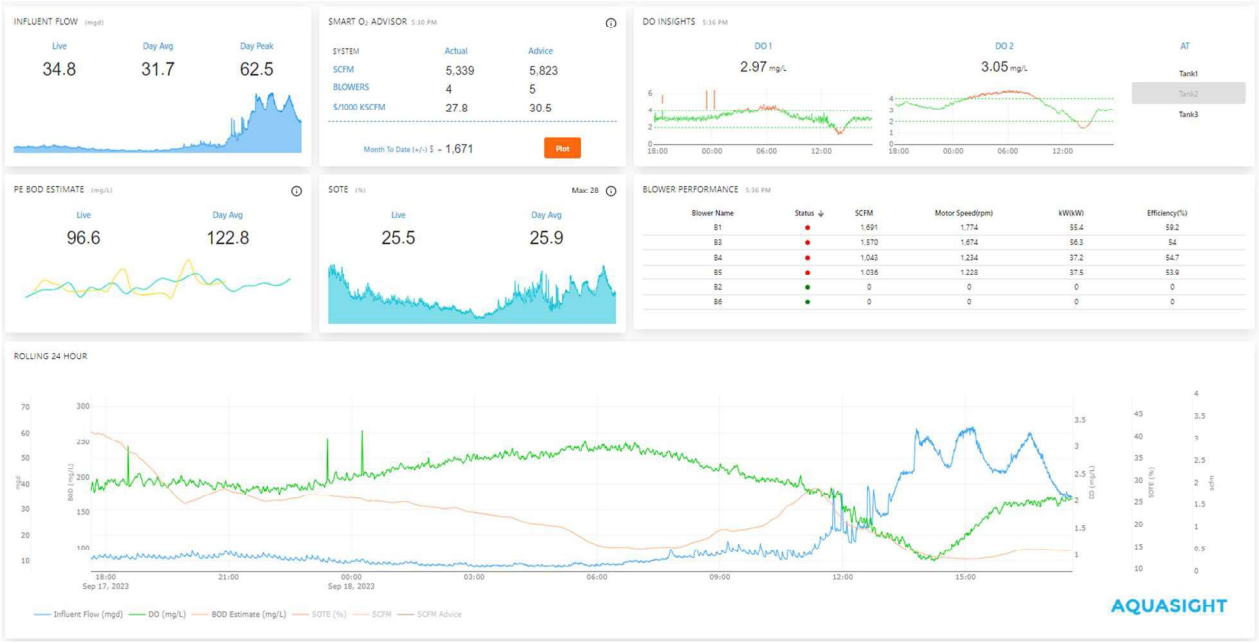

Figure 2: Example of APOLLO's™ Activated Sludge (Aeration) Module

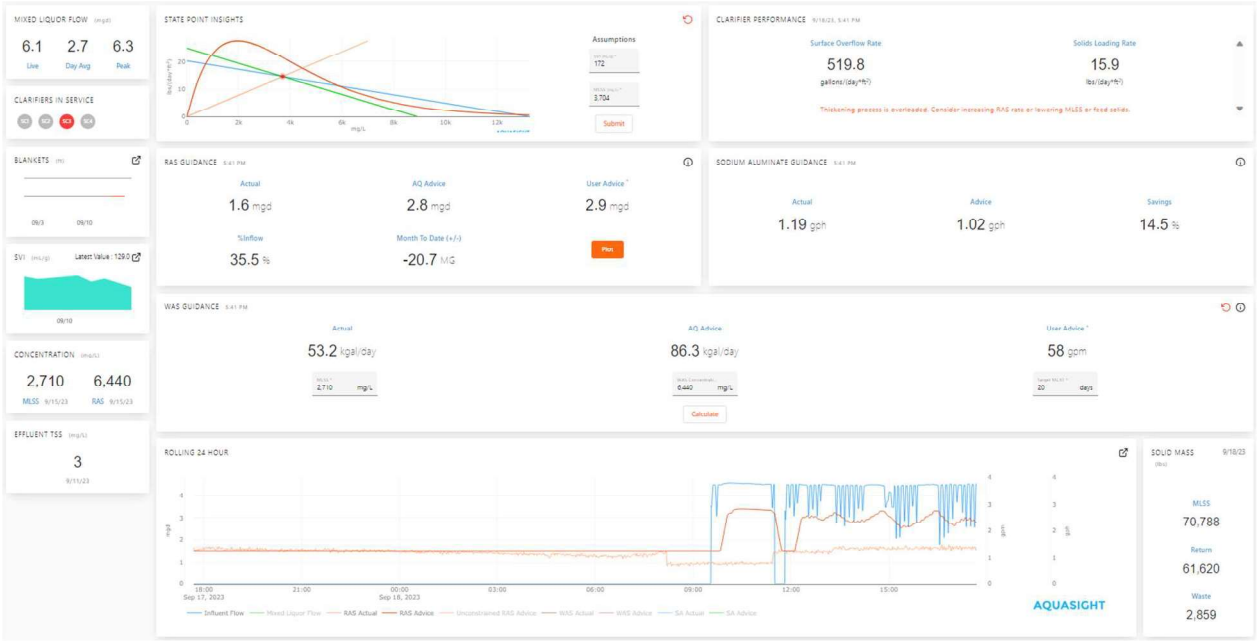

Figure 3: Example of APOLLO's™ Secondary Clarifier Module

SCOPE OF WORK

Generally, the scope of this project includes onboarding the PRWRF to Aquasight's APOLLO™ software equipped with seven (7) modules. The SCOPE OF WORK may change in the future depending on the needs of the plant. The final SOW will be determined in collaboration with the Utility team.

Table 1: Proposed APOLLO modules for PRWRF

Module	Description
Plant Dashboard	Default APOLLO™ module – Customizable dashboard that allows users to centralize analytics from various APOLLO™ modules to a single screen.
Weather	Default APOLLO™ module – Live weather radar with various meteorological layers.
Secondary Treatment – Activated Sludge	Focused on the aeration process, this module includes monitoring, analytics, and copilot dashboard and a detailed decode feature for analyzing aerator and process performance.
Secondary Treatment – Secondary Clarifiers	Focused on the secondary clarification process and RAS/WAS pumping, this module includes monitoring, analytics, and copilot

Module	Description
	dashboard and a detailed decode feature for analyzing process performance.
Disinfection	Focused on the UV disinfection with supplemental chlorination and dechlorination process, this module includes monitoring, analytics, and copilot dashboard and a detailed decode feature for analyzing permit compliance and process performance.
Lab Insights	Default APOLLO™ module – Provides users with a robust plotting tool for lab, live, and analytical data.
SAMI	Default APOLLO™ module – Digital alert system with customizable alert thresholds for parameters of the most critical interest.

Additionally, Aquasight will review data sources, data completeness, and instrumentation coverage for the PRWRF. We will make recommendations for additional instrumentation as may be necessary to optimize the data rich environment necessary for an optimized process solution.

The project goals described above will be completed through the following tasks:

Task 0 – Project Management
Task 1 – Data Polling
Task 2 – Site Visit and Plant Review Including Instrumentation Review and Recommendations
Task 3 – Aeration Onboarding
Task 4 – Secondary Clarifier & RAS/WAS Pumping Onboarding
Task 5 – UV Disinfection/Chlorination/Dechlorination Onboarding
Task 6 – Default Module Configuration
Task 7 – Training and Adoption

Appendix B: Project Milestones, Timeline, and Deliverables

The Aquasight scope of work for this project will have four key milestones and associated deliverables and will be implemented with approximately the following timelines (**Table 2)**. The timeline is subject to change by mutual agreement between Aquasight and the City of Santa Fe.

Table 2: Project Delivery Calendar

Milestones	WEEKS from Notice to Proceed	Aquasight Deliverables
1. Design Review, Instrumentation Review, Data Polling, Connections, Lab & Live Insights	~ 12 weeks	• APOLLO™ Release 1 – Lab Insights • Milestone 1 Report
2. Secondary Process & Aeration Modules	~ 16 weeks	• APOLLO™ Release 2 – Secondary & Aeration Modules • Milestone 2 Report
3. Disinfection Module & SAMI Alerts	~ 22 weeks	• APOLLO™ Release 3 – Disinfection Module & SAMI Alerts • Milestone 3 Report
4. Plant Dashboard, Training & Adoption	~ 26 weeks	• APOLLO™ Release 4 – Plant Dashboard, Training, & Adoption • APOLLO™ User Manual • Virtual Training Sessions

Appendix C: Required Participation from Santa Fe Public Works

DATA REQUIREMENTS

The following information is required from Santa Fe Public Works for successful project completion:

- Public Works SCADA Data Historian access,
- Public Works LIMS database access,
- Any applicable sensor/instrumentation API details,
- Where applicable, process data spreadsheets and mechanism to routinely upload,
- Process SOP's,
- Process design data,
- Equipment manufacturer information (specs, O&M manuals, etc.)
- Plant drawings of relevant processes,
- Energy bills,
- Control strategy documentation for automated control systems, and
- Plant budget and cost sheets

Where information is not available, assumptions will be made and discussed with Santa Fe Public Works team before implementing it in the APOLLO™ System.

O&M, SCADA, LAB, AND DESIGN CLARIFICATION MEETINGS

During deployment, in addition to or as a part of any project management meetings, Aquasight may request meetings with key Public Works staff. Such meetings are important to clarify operations, understand assumptions, and agree on key configurations in APOLLO™ systems.

Appendix D: Project Fee

Aquasight proposes the following Not-To-Exceed project fee for the APOLLO™ solution implementation for the City of Santa Fe Public Works Paseo Real Water Reclamation Facility:

APOLLO™ Onboarding Fee: **Not to Exceed $200,000**
APOLLO™ Annual Fee: **$50,000 per year, minimum three-year contract**

The project billing schedule shall be as noted on the page 1 of the Order Form, and shall have the basic invoice timing noted below:

- The Onboarding Fee shall be billed in monthly payments during the Onboarding period (estimated over 6 months) with the first Onboarding payment due at contract signing.
- The Annual Fee shall be billed at the beginning of each calendar year, with the first year Annual Fee billed at contract signing.

The following activities are covered in the annual fee:

- **APOLLO™ technology usage:** APOLLO™ technology that has been developed by Aquasight is the core foundation of this project. The technology will be the backbone for releases, metrics, advisors, KPIs and is accessible anywhere, on any device and at any time.
- **APOLLO™ system operations:** APOLLO™ system operations include lab and live database management, analytical scripts management, API management and user preferences, credential, and security management.
- **Infrastructure management:** APOLLO™ runs on several virtual machines and servers. These servers require upkeep and maintenance include software library updates, monitoring of infrastructure metrics and hardware management.
- **Advisor upkeep and maintenance:** Advisors require quality data inputs; unforeseen bad data quality events do occur in practical environment and advisors must be evolved to ensure it discards bad data or debugged to ensure optimal performance of smart advisors.
- **Ticket management and Help desk:** Access Aquasight help desk will operate 8:00 am to 5:00 pm EST during weekdays for any issues such as user access, applications and/or routine troubleshooting. Any high priority issue Aquasight will address in 1-to-4-hour time frame depending on type and nature of this issue during business hours and during weekend and holidays within 24-to-48-hour time frame.
- **SAMI:** Alert's system that manages e-mails, notifications, alert statistics, thresholds management and user settings.
- **Bug fixes:** If we detect any issues or bugs in optimal running of software or technology, Aquasight will fix free of cost and repair those bugs.
- **Data polling maintenance:** Polling software is installed in virtual machine within Santa Fe Public Works. When tag names are changed and database connections are reconfigured, this require polling software to be updated. Public Works should inform or discuss with Aquasight

before making changes on setting and access credentials which may disrupt the flow of data streaming to APOLLO™.

- **Free feature upgrade as part of APOLLO™ product roadmap:** Aquasight continuously evolves its technology and features for driving more value to customers. Such features will be available for free at no additional cost if they are part of the standard product roadmap.

AQUASIGHT

AQUASIGHT SUBSCRIPTION AGREEMENT

This Aquasight Subscription Agreement ("Agreement") is a binding legal contract between your employer or other entity on whose behalf you accept the terms of this Agreement (Customer) and Aquasight, LLC (Aquasight). By accessing or using the Software or Services, as defined below, Customer will be bound by the terms of this Agreement. Additionally, by accepting the terms of this Agreement you agree to be bound individually to the use restrictions and limitations, and confidentiality obligations set forth in this Agreement.

A. **DEFINITIONS**. Defined terms, as used in this Agreement, have the meanings set forth in this Section, elsewhere in the body of this Agreement, in exhibits and in any other attachment to this Agreement.

1. "Data" means information, content and other data that may be exchanged electronically between Customer and Aquasight.

2. "Documentation" means the user manuals and/or technical publications as applicable, supplied in connection with Software relating to the installation, use and administration of Software.

3. "Services" means on-boarding, implementation, initial deployment, maintenance, administration, subscription, technical, training, consulting, support and other professional services provided in connection with or otherwise associated with Software as described in an Order Form.

4. "Software" means the proprietary software and platform employed by Aquasight to deliver Services and its associated technology (if applicable), and any modified versions and copies of, and upgrades, updates and additions to Software, provided to Customer by Aquasight, including Software and access thereto provided on a Software as a Service (SaaS) basis.

B. **LICENSE GRANT AND PROVIDER RESPONSIBILITIES**

1. *Hosting and Software Services.* Aquasight agrees to provide the hosting services described herein and as may be set forth in more detail in the applicable Order Form, including the right of Customer to access, view, download, transmit and use all data transmitted by Customer or Customer's systems and facilities to Aquasight ("Customer Data") hosted by Aquasight. Aquasight hereby grants Customer a non-exclusive, non-transferable, worldwide right to use and access the Software solely for Customer's own internal business purposes, subject to the terms and conditions of this Agreement and provided that all fees due and payable under this Agreement have been paid by Customer to Aquasight. Only employees of Customer properly authorized by Customer for the performance of their job responsibility

("Authorized Users") for Customer shall be entitled to access and use the Software. Only the number of Authorized Users indicated on the Order Form are permitted to access and use the Software. The Software may be hosted on hardware owned, operated and managed by Aquasight's third party service providers. Upon Customer's request, Aquasight shall provide reasonable information to Customer with respect to Aquasight's third party hosting services provider. Aquasight shall have the right to modify the Software in its sole discretion, provided that Aquasight shall not materially diminish the performance or functionality of the Software without Customer's prior written consent.

2. *Data Security.* Aquasight will maintain and enforce information and data privacy and security procedures with respect to its access, use and storage of all Customer Data that (a) are at least equal to industry standards taking into consideration the sensitivity of the relevant Customer Data, (b) comply with all applicable international, foreign, federal, state and local laws, statutes, rules, orders and regulations, and (c) provide reasonably appropriate administrative, technical, and physical safeguards to protect against accidental or unlawful destruction, loss, alteration or unauthorized disclosure, access or use of Customer Data.

C. **CUSTOMER RESPONSIBILITIES**

1. *Compliance with Laws.* Customer is responsible for all activity occurring under any applicable user accounts and Customer shall abide by all applicable local, state, federal and foreign laws, treaties and regulations in connection with Customer's use of the Services and Software, including those related to data privacy, international communications and the transmission of technical or personal data.

2. *Customer Data.* Customer is solely responsible for the quality of the data transmitted to Aquasight or otherwise processed by the Software. Customer acknowledges that the quality of the results and analytics provided by the Software is a function of the quality of Customer's data, and that inaccurate or erroneous data can lead to inaccurate or erroneous results. Aquasight cannot and does not guarantee the quality of any data provided by Customer. Aquasight retains real-time collected data for a period of one year, and all analyzed data results for the life of the Subscription Term.

3. *Customer Equipment and Connectivity.* Customer is solely responsible for the equipment used by Customer in connection with the Software, including without limitation the calibration of all sensors and equipment data being collected, and Customer's connectivity to the Aquasight system and Software. Aquasight will not be liable or responsible for any delays, inaccuracies or unavailable resulting from a disruption or interruption of connectivity and data communication to the Aquasight system and Software.

4. *Use of the Software and Results.* Customer acknowledges and agrees (a) it will verify and validate with its engineering staff any changes that Customer proposes to make to its systems or facilities based on intelligence from the Aquasight system and Software, and (b) the Aquasight system and Software does not control Customer's systems or facilities, but rather

assist Customer with the efficiencies associated with the operation of Customer's system and facilities.

5. *Design Information and Configuration.* Customer acknowledges and agrees that the Aquasight system and Software are configured based on the preliminary design information provided by Customer. In the event of any changes or modifications to the design information relating to Customer's systems or facilities, Customer will promptly notify Aquasight of such changes or modifications. Aquasight will adapt the configuration of the Aquasight system and Software to the new design conditions pursuant to a separate Statement of Work to be mutually agreed to by the parties.

6. *License to Use Customer Data*. Customer grants Aquasight (i) a non-exclusive, non-transferable (except as permitted herein), royalty-free, perpetual and fully paid license to use, reproduce, modify and transmit Data provided by Customer for the purpose of performing the Services, and (ii) a non-exclusive, non-transferable (except as permitted herein), perpetual, royalty-free, fully-paid license to use, reproduce, display, modify, create derivative works of, disclose and distribute any usage data derived by Aquasight from the provision of Services to Customer ("Usage Data") for the purpose of performing the Services and providing the Software listed in the applicable Order Form, including improving Software and the Services, provided that the Usage Data is disclosed in an aggregate form.

D. TERM AND TERMINATION

1. *Term*. The initial subscription term of this Agreement shall commence as of the date set forth on the applicable Order Form and shall continue for the Subscription Term set forth in the applicable Order Form (the "Initial Subscription Term"). Thereafter, this Agreement shall automatically renew for successive renewal terms of one (1) year each unless: (i) either Party provides written notice of its intention not to renew at least 90 calendar days prior to the expiration of the then-current term; or (ii) the Agreement is terminated in accordance with this Section D.

2. *Termination for Breach.* Either Party may terminate this Agreement with thirty (30) calendar days prior written notice in the event that the other Party has failed to comply with any material term, condition, or obligation of this Agreement, and such Party subsequently has failed to remedy the default within thirty (30) calendar days after notice of the default by the non-defaulting Party.

3. *Effect of Termination.* Promptly upon termination or expiration of this Agreement for any reason, Customer shall cease using and accessing the Software. Termination of this Agreement shall be in addition to and not in limitation of any other rights and remedies to which either Party is or may become entitled. In the event of termination or expiration of this Agreement for any reason, Aquasight will provide Customer Data to Customer pursuant to a separate Statement of Work to be mutually agreed to by the parties. Aquasight will retain a copy of Customer Data (real-time data) for a period of one year after termination or expiration

of this Agreement. After the expiration of the one year period, Aquasight shall have the right to delete and destroy all Customer Data without notice to Customer.

E. FEES AND CHARGES

1. *Fees*. Customer shall pay all fees or charges in accordance with the fees, charges and billing terms in effect at the time a fee or charge is due and payable. The initial fees and charges, and the applicable fees for renewal terms are described in the applicable Order Form. Unless otherwise agreed in writing by the parties, all fees and charges are due and payable thirty (30) days after receipt of invoice by Customer. Aquasight shall be entitled to charge interest on overdue unpaid fees due hereunder at the rate of the lesser of (a) 12% per year or (b) the highest amount permitted by applicable law.

2. *Taxes.* Customer agrees to pay any sales, value-added, or other similar taxes imposed by applicable law that Aquasight must pay based on Software or the Services, except for taxes based on Aquasight's income. Fees listed in the applicable Order Form are exclusive of taxes. Notwithstanding the foregoing, if Customer is exempt from the payment of such taxes, Customer shall provide Aquasight with documentary proof of exemption issued by the appropriate taxing authorities.

F. OWNERSHIP

1. *Aquasight IP*. All right, title and interest in and to Software and all portions thereof, including the look and feel of the Software, visualizations displayed by the Software, and all other intellectual property rights therein, are and shall remain with Aquasight and its suppliers. Customer understands and agrees that all intellectual property rights, and all rights incident thereto, are and shall remain in Aquasight including all applicable rights to: (i) copyrights, including all rights incident to copyright ownership, such as all rights of publication, registration and rights to create derivative works; (ii) patents; (iii) trademarks; and (iv) trade secrets (including all know-how, ideas, logic, formulas and confidential information embodied in or reflected in Software).

2. *Customer IP*. All right, title and interest in and to Data provided by Customer, and all related information provided to and accessed by Aquasight, including all intellectual property rights therein, are and shall remain with Customer.

G. WARRANTY AND LIMITATION OF LIABILITY

1. *Legal Authority*. Each Party represents and warrants to the other Party that: (i) such Party is a corporation duly organized, validly existing and in good standing under the laws of the state of its incorporation; (ii) such Party has the full and unrestricted power and authority to execute and deliver this Agreement and to carry out the transactions contemplated hereby; and (iii) the performance of such Party's obligations and duties hereunder does not and shall not conflict with or result in a breach of any other agreement of such Party or any judgment, order, or decree by which such Party is bound.

2. *Customer Data*. Customer represents and warrants that it is the right and authority to provide all Customer Data and software to be hosted by Aquasight hereunder, and that all such Customer Data and software shall be free from viruses, spyware, and other similar harmful and destructive code.

3. *Disclaimer*. EXCEPT AS EXPRESSLY PROVIDED IN THIS AGREEMENT, THE SOFTWARE AND THE SERVICES ARE PROVIDED TO CUSTOMER IN THEIR THEN-EXISTING CONDITION, AS IS, WHERE IS AND WITH ALL FAULTS. EXCEPT FOR THE FOREGOING LIMITED WARRANTIES, PROVIDER EXPRESSLY DISCLAIMS ALL OTHER WARRANTIES, EXPRESS OR IMPLIED, INCLUDING NON-INFRINGEMENT OF THIRD-PARTY RIGHTS, MERCHANTABILITY, QUIET ENJOYMENT, SATISFACTORY QUALITY, OR FITNESS FOR A PARTICULAR PURPOSE. PROVIDER DOES NOT REPRESENT OR WARRANT THAT THE SOFTWARE OR ANY SERVICES WILL BE SECURE, UNINTERRUPTED, OR ERROR FREE, OR MEET CUSTOMER'S EXPECTATIONS, THAT ANY STORED DATA WILL BE ACCURATE OR COMPLETE, OR THAT ANY ERRORS OR DEFECTS IN SOFTWARE WILL BE CORRECTED.

4. *Limitation of Liability*. NEITHER PARTY SHALL BE LIABLE TO THE OTHER PARTY FOR ANY LOST PROFITS, LOST REVENUES OR OPPORTUNITIES, DOWNTIME, OR ANY INCIDENTAL, CONSEQUENTIAL, EXEMPLARY, INDIRECT, OR SPECIAL DAMAGES OR COSTS, RESULTING FROM ANY CLAIM OR CAUSE OF ACTION BASED ON BREACH OF WARRANTY, BREACH OF CONTRACT, NEGLIGENCE (INCLUDING STRICT LIABILITY), OR ANY OTHER LEGAL THEORY, EVEN IF EITHER OR BOTH OF THEM KNEW, OR SHOULD HAVE KNOWN, OF THE POSSIBILITY THEREOF. NEITHER PARTY SHALL BE LIABLE TO THE OTHER PARTY OR TO ANY OTHER PERSON OR ENTITY FOR AN AMOUNT OF DAMAGES IN EXCESS OF THE FEES PAID BY CUSTOMER TO PROVIDER IN THE SIX (6) FULL CALENDAR MONTHS IMMEDIATELY PRECEDING THE MONTH IN WHICH THE EVENT GIVING RISE TO THE CLAIM OCCURRED. NOTWITHSTANDING THE FOREGOING OR ANYTHING TO THE CONTRARY CONTAINED IN THIS AGREEMENT, THE LIMITATIONS UPON THE TYPES AND AMOUNTS OF EACH PARTY'S LIABILITY, AND THE EXCLUSIONS OF CERTAIN TYPES OF DAMAGES, SET FORTH IN THE THIS SECTION, SHALL NOT APPLY TO THE FOLLOWINGDAMAGES RESULTING FROM CUSTOMER'S USE IN VIOLATION OF THE LICENSE AND USAGE RESTRICTIONS SET FORTH HEREIN (E.G., SECTION B(1)), OR CUSTOMER'S BREACH OF SECTION F (OWNERSHIP).

H. **MISCELLANEOUS**

1. *Governing Law; Venue; Severability*. This Agreement shall be governed, construed and enforced in accordance with the laws of the State of Michigan without reference to conflicts of law principles. The Parties agree that the exclusive jurisdiction of any actions arising out of, relating to, or in any way connected with this Agreement, shall be in the state or federal courts, as applicable, located in Oakland County, Michigan. In the event that one or more of the provisions herein shall be invalid, illegal or unenforceable in any respect, the validity, legality and enforcement of the remaining provisions shall not be affected or impaired.

2. *Assignment.* Customer shall not assign this Agreement or any rights or obligations hereunder, without the express written consent of Aquasight, which consent shall

not be unreasonably withheld. Any assignment or transfer in violation of the foregoing will be null and void. Aquasight reserves the right to assign this Agreement to any affiliate or any entity in connection with the sale, combination, or transfer of all or substantially all of the assets or capital stock or from any other corporate form of reorganization by or of Aquasight. Subject to all of the terms and conditions hereof, this Agreement inures to the benefit of and is binding upon the Parties hereto and their successors and assigns.

3. *Force Majeure*. Any delays in or failure of performance of either Party to this Agreement shall not constitute a default under this Agreement or give rise to any claim for damages to the extent such delays or failure of performance are caused by a force majeure event, including acts of god, fire, flood, explosion, war, terrorism, strikes, or other concerted work stoppages of labor, inability to obtain raw material, equipment or transportation, breakage or failure of equipment or apparatus, or loss of any necessary utility. The time for performance so delayed will be deemed extended for the period of such delay; provided that, in the event the delay extends beyond 30 calendar days, the other Party shall be entitled to terminate this Agreement for cause.

4. *Waiver*. The failure to enforce or the waiver by either Party of one default or breach of the other Party shall not be considered to be a waiver of any subsequent default or breach.

5. *Entire Agreement*. This Agreement, and each schedule and exhibit hereto, together constitute the entire understanding of the Parties with respect to the subject matter hereof, and supersedes all prior and contemporaneous written and oral agreements with respect to the subject matter. No modification of this Agreement shall be binding on either Party unless it is in writing and signed by both Parties. In the event of any conflict or inconsistency between this Agreement and any schedule or exhibit, the terms and conditions of this Agreement shall prevail.

Services Offered to the City of Santa Fe (9.2023)

Approved:
These services have been approved by the New Mexico Council for Purchasing from Persons with Disabilities and are available through Horizons of New Mexico.

- ADA Accessibility Consulting Services
- Auctioneering Services
- Bulk Mailing and Sorting
- Call Center Services
- Computer Refurbishing
- Courier Services
- Decontamination, Sanitation and Sterilization Services
- Debris Removal
- Document Imaging
- Document Shredding
- Envelope Stuffing
- General Labor
- Hard Drive Destruction
- Janitorial and Housekeeping Services – Including Carpet Cleaning & Floor Care
- Landscape Irrigation
- Landscaping
- Mailing Services
- Management of an Assistive Technology Reuse and Recycling Program
- Meeting Minute Preparation Services
- Pest Control and Extermination Services
- Printing Services
- Rest Area Maintenance
- Screen Printing
- Snow Removal
- Yard, Grounds, and Lawn Maintenance

Permissive:
The services have been approved by the New Mexico Council for Purchasing from Persons with Disabilities as permissible for sale under the State Use Act through Horizons of New Mexico. While the Council recognizes that certain Horizons of New Mexico members are capable of performing the services listed below, said services are considered permissive and excluded from the mandatory aspect of the State Use Program. Any procurement of the below services through Horizons of New Mexico is at the discretion of the purchasing agent and will be considered by the Council on a case-by-case basis.

- Graphic Design
- Graphic Design - Logo Design
- IT – Enterprise Application
- IT – IV & V
- IT Network and Database Management
- IT Support
- IT Security Services
- IT – Web Design
- IT – Web Programmer
- Marketing
- Social Media Marketing
- Training Services

For the complete State Use service list, please go to: http://horizonsofnewmexico.org/services.html

CERTIFICATE OF LIABILITY INSURANCE

DATE (MM/DD/YYYY): 9/4/2024

THIS CERTIFICATE IS ISSUED AS A MATTER OF INFORMATION ONLY AND CONFERS NO RIGHTS UPON THE CERTIFICATE HOLDER. THIS CERTIFICATE DOES NOT AFFIRMATIVELY OR NEGATIVELY AMEND, EXTEND OR ALTER THE COVERAGE AFFORDED BY THE POLICIES BELOW. THIS CERTIFICATE OF INSURANCE DOES NOT CONSTITUTE A CONTRACT BETWEEN THE ISSUING INSURER(S), AUTHORIZED REPRESENTATIVE OR PRODUCER, AND THE CERTIFICATE HOLDER.

IMPORTANT: If the certificate holder is an ADDITIONAL INSURED, the policy(ies) must be endorsed. If SUBROGATION IS WAIVED, subject to the terms and conditions of the policy, certain policies may require an endorsement. A statement on this certificate does not confer rights to the certificate holder in lieu of such endorsement(s).

PRODUCER	CONTACT NAME: Connie Skocen	
VTC Insurance Group 37000 Grand River Ave Ste 150 Farmington Hills MI 48335	PHONE (A/C, No, Ext): (248)471-0970	FAX (A/C, No): (248)471-0641
	E-MAIL ADDRESS: cskocen@vtcins.com	
	INSURER(S) AFFORDING COVERAGE	NAIC #
	INSURER A : Travelers Casualty Ins.Co. of America	19046
INSURED Aquasight LLC 1650 W Big Beaver Rd, Ste 101 Troy MI 48084	INSURER B : Travelers Prop. Cas.Co. Of Ame	25674
	INSURER C : Travelers Indemnity Company of CT	25682
	INSURER D :	
	INSURER E :	
	INSURER F :	

COVERAGES **CERTIFICATE NUMBER:** 23-24 Master **REVISION NUMBER:**

THIS IS TO CERTIFY THAT THE POLICIES OF INSURANCE LISTED BELOW HAVE BEEN ISSUED TO THE INSURED NAMED ABOVE FOR THE POLICY PERIOD INDICATED. NOTWITHSTANDING ANY REQUIREMENT, TERM OR CONDITION OF ANY CONTRACT OR OTHER DOCUMENT WITH RESPECT TO WHICH THIS CERTIFICATE MAY BE ISSUED OR MAY PERTAIN, THE INSURANCE AFFORDED BY THE POLICIES DESCRIBED HEREIN IS SUBJECT TO ALL THE TERMS, EXCLUSIONS AND CONDITIONS OF SUCH POLICIES. LIMITS SHOWN MAY HAVE BEEN REDUCED BY PAID CLAIMS.

INSR LTR	TYPE OF INSURANCE	ADDL INSD	SUBR WVD	POLICY NUMBER	POLICY EFF (MM/DD/YYYY)	POLICY EXP (MM/DD/YYYY)	LIMITS	
A	X COMMERCIAL GENERAL LIABILITY CLAIMS-MADE / X OCCUR GEN'L AGGREGATE LIMIT APPLIES PER: X POLICY / PRO-JECT / LOC OTHER:	X	Y	6804G174764	10/20/2023	10/20/2024	EACH OCCURRENCE DAMAGE TO RENTED PREMISES (Ea occurrence) MED EXP (Any one person) PERSONAL & ADV INJURY GENERAL AGGREGATE PRODUCTS - COMP/OP AGG	$ 1,000,000 $ 1,000,000 $ 10,000 $ 1,000,000 $ 2,000,000 $ 2,000,000
A	AUTOMOBILE LIABILITY ANY AUTO ALL OWNED AUTOS / SCHEDULED AUTOS X HIRED AUTOS / X NON-OWNED AUTOS			6804G174764	10/20/2023	10/20/2024	COMBINED SINGLE LIMIT (Ea accident) BODILY INJURY (Per person) BODILY INJURY (Per accident) PROPERTY DAMAGE (Per accident)	$ 1,000,000 $ $ $
B	X UMBRELLA LIAB / X OCCUR EXCESS LIAB / CLAIMS-MADE DED X RETENTION $ 5,000			CUP0H824118	10/20/2023	10/20/2024	EACH OCCURRENCE AGGREGATE	$ 5,000,000 $ 5,000,000
C	WORKERS COMPENSATION AND EMPLOYERS' LIABILITY ANY PROPRIETOR/PARTNER/EXECUTIVE OFFICER/MEMBER EXCLUDED? Y / N (Mandatory in NH) If yes, describe under DESCRIPTION OF OPERATIONS below	N / A		UB5J975661	10/15/2023	10/15/2024	X PER STATUTE / OTH-ER E.L. EACH ACCIDENT E.L. DISEASE - EA EMPLOYEE E.L. DISEASE - POLICY LIMIT	$ 1,000,000 $ 1,000,000 $ 1,000,000
A	Cyber First (claims-made) (including ISL-3rd party)			6804G174764	10/20/2023	10/20/2024	Aggregate Each Wrongful Act	$2,000,000 $2,000,000

DESCRIPTION OF OPERATIONS / LOCATIONS / VEHICLES (ACORD 101, Additional Remarks Schedule, may be attached if more space is required)

Where required by written contract, City of Santa Fe, their officials, officers, employees, and agents are additional insured's on the General Liability policy with respect to ongoing and completed operations performed by the named insured. Where required by written contract, additional insured coverage provided under the General Liability and Umbrella applies on a primary and noncontributory basis. General Liability, Auto & Work Comp includes waiver of subrogation on behalf of the additional insured as required by written contract and where allowed by law.

CERTIFICATE HOLDER

jswalker@santafenm.gov

City of Santa Fe
200 Linclon Avenue
Santa Fe, NM 87501

CANCELLATION

SHOULD ANY OF THE ABOVE DESCRIBED POLICIES BE CANCELLED BEFORE THE EXPIRATION DATE THEREOF, NOTICE WILL BE DELIVERED IN ACCORDANCE WITH THE POLICY PROVISIONS.

AUTHORIZED REPRESENTATIVE

Jeffrey Hamlin/CCS Jeff Hamlin

© 1988-2014 ACORD CORPORATION. All rights reserved.

3250176 Aquasight packet EMERGENCY

Final Audit Report 2024-10-14

Created:	2024-10-07
By:	Kristy Miera (kamiera@santafenm.gov)
Status:	Signed
Transaction ID:	CBJCHBCAABAAgd6H8MShyuwUbLtPD-sLziP0m2UsI7RH

"3250176 Aquasight packet EMERGENCY" History

Document created by Kristy Miera (kamiera@santafenm.gov)
2024-10-07 - 8:23:58 PM GMT- IP address: 63.232.20.2

Document emailed to ajhopkins@santafenm.gov ajhopkins@santafenm.gov (ajhopkins@santafenm.gov) for signature
2024-10-07 - 8:32:42 PM GMT

Email viewed by ajhopkins@santafenm.gov ajhopkins@santafenm.gov (ajhopkins@santafenm.gov)
2024-10-07 - 9:26:19 PM GMT- IP address: 104.47.64.254

Document e-signed by ajhopkins@santafenm.gov ajhopkins@santafenm.gov (ajhopkins@santafenm.gov)
Signature Date: 2024-10-07 - 9:26:48 PM GMT - Time Source: server- IP address: 63.232.20.2

Document sent to JoAnn Lovato (jdlovato@santafenm.gov) and Travis Dutton-Leyda (tkduttonleyda@santafenm.gov) for signature. One of them to sign
2024-10-07 - 9:26:52 PM GMT

Email viewed by Travis Dutton-Leyda (tkduttonleyda@santafenm.gov)
2024-10-07 - 10:07:06 PM GMT- IP address: 63.232.20.2

Email viewed by JoAnn Lovato (jdlovato@santafenm.gov)
2024-10-08 - 5:20:35 PM GMT- IP address: 63.232.20.2

Document e-signed by JoAnn Lovato (jdlovato@santafenm.gov)
Signature Date: 2024-10-08 - 5:37:11 PM GMT - Time Source: server- IP address: 63.232.20.2

Document emailed to EMILY OSTER (ekoster@santafenm.gov) for signature
2024-10-08 - 5:37:16 PM GMT

Email viewed by EMILY OSTER (ekoster@santafenm.gov)
2024-10-11 - 2:44:43 PM GMT- IP address: 104.47.65.254

Powered by Adobe Acrobat Sign

Email viewed by EMILY OSTER (ekoster@santafenm.gov)

2024-10-14 - 2:22:48 PM GMT- IP address: 174.215.25.49

Document e-signed by EMILY OSTER (ekoster@santafenm.gov)

Signature Date: 2024-10-14 - 2:26:38 PM GMT - Time Source: server- IP address: 174.215.25.49

Agreement completed.

2024-10-14 - 2:26:38 PM GMT

ITEM #_____

CITY OF SANTA FE

Date: November 26, 2025

To: Governing Body

From: Carol Swenson, Public Works Business Operations Manager
CS
YVONNE SWENSON

Via: Talal Saint-Lot, NMGA President – Grant Consultant
Talal Saint-Lôt
Talal Saint-Lôt (Dec 2, 2025 17:26:28 MST)
Jesse Roach, Interim Public Utilities Department Director
JR
Jesse Roach

Subject: Capital Appropriation Agreement Project SAP 25-J2459-GF, Paseo Real Wastewater Treatment Facility

---

ACTION:
Request for Approval of Capital Outlay Grant Agreement with New Mexico Environment Department for the Improvement of the Paseo Real Wastewater Treatment Facility Project SAP 25-J2459-GF in the Total Amount of $100,000 With a Reversion Date of June 30, 2029. (Jesse Roach, Interim Public Utilities Department Director, jdroach@santafenm.gov)

Request for Approval of a Budget Amendment Resolution (BAR) to Allocate $99,000 from the from the 2025 Capital Appropriation to FY26 Revenue and WIP Design for the Improvement of the Paseo Real Wastewater Treatment Facility.

BACKGROUND AND SUMMARY:
The City of Santa Fe has been awarded Capital Outlay Project SAP 25-J2459-GF in the amount of $100,000 "…to plan, design and construct a wastewater treatment facility in Santa Fe in Santa Fe County."

Of the total appropriation, $1,000 is designated for Art in Public Places (AIPP). The remaining $99,000 is available for project budget allocation. All funds are expected to be expended prior to the June 30, 2029, reversion date.

The Agreement designates Mayor Alan Webber as the official representative in all matters related to the Agreement and therefore requires review by Governing Body.

ATTACHMENTS:
Grant Agreement
PLID Form
BAR

Grant Manager: ERIKA LUJAN
ERIKA LUJAN (Jan 12, 2026 08:36:26 MST)
Jan 12, 2026

NEW MEXICO CAPITAL OUTLAY GRANT AGREEMENT
CAPITAL APPROPRIATION PROJECT

THIS AGREEMENT is made and entered into by and between the State of New Mexico, New Mexico Environment Department, ("**Department**") and City of Santa Fe, ("**Grantee**") (individually "**Party**" and collectively "**Parties**"). This Agreement shall be effective as of the date the Department executes it ("**Effective Date**").

WITNESSETH

WHEREAS, in the Laws of 2025, Chapter 159, Section 28, Subsection 108, the Legislature made an appropriation to the Department, funds from which the Department is making available to the Grantee pursuant to this Agreement; and

WHEREAS, the Department is granting to Grantee, and the Grantee is accepting the grant of funds from this appropriation, in accordance with the terms and conditions of this Agreement;

NOW, THEREFORE, in consideration of the mutual covenants and obligations contained herein, the parties hereby mutually agree as follows:

AGREEMENT

I. PROJECT DESCRIPTION, GRANT AMOUNT, AND REVERSION

A. SAP 25-J2459-GF ("**Project**") **June 30, 2029** ("**Reversion Date**"). Laws of 2025, Chapter 159, Section 28, Subsection 108, One Hundred Thousand Dollars, ($100,000.00), to plan, design and construct a wastewater treatment facility in Santa Fe in Santa Fe county;.

B. Grantee's total reimbursements shall not exceed One Hundred Thousand Dollars $100,000.00 ("**Appropriation Amount**") minus the allocation for Art in Public Places ("**AIPP amount**"), if applicable, One Thousand Dollars, $1,000.00, which equals Ninety Nine Thousand Dollars, $99,000.00 ("**Adjusted Appropriation Amount**").

C. In the event of a conflict among the Appropriation Amount, the Reversion Date, as defined herein and/or the purpose of the Project, as set forth in this Agreement, and the corresponding appropriation language in the laws cited above in this Article I, the language of the laws cited herein shall control.

The information contained in Article I is referred to collectively as the "**Project Description.**"

II. DISBURSEMENT LIMITATION

A. Upon the Effective Date, the Grantee shall submit to the Department a comprehensive procurement plan and expenditure plan, detailing a Project timeline with milestones, required procurements, and identifying expected expenditures per milestone (collectively, "**Project Budget**"). The Department shall review and approve the Project Budget by approving a Notice of Department's Obligation ("**Notice of Obligation**"), in accordance with the Project Description, a sample of which is attached hereto as **Exhibit B** and incorporated herein by reference. After receipt of approved Notice of Obligation, the Grantee may be reimbursed for allowable costs up to the Adjusted Appropriation Amount. This Agreement and any reimbursements up to the Adjusted Appropriation Amount are expressly conditioned upon the following:

a. Irrespective of any Notice of Obligation, Grantee's expenditures shall be made in accordance with the Project Budget, on or before the Reversion Date and/or, if applicable, any Early Termination Date; and

b. The total amount received by Grantee shall not exceed the lesser of:
    i. the Adjusted Appropriation Amount identified in Article I (B) herein; or
    ii. the total of all amounts stated in the Notice(s) of Obligation evidencing the Department has received and accepted Grantee's Third Party Obligation(s); and
c. Grantee's expenditures are made and accounted for pursuant to the State Procurement Code, State's Model Accounting Practices, and execution of binding written obligations or purchase orders with third-party contractors or vendors for the provision of services, including professional services, or the purchase of tangible personal property and real property for the Project ("**Third Party Obligations**"); and
d. Grantee's submittal of timely Requests for Payment and supporting documentation in accordance with the procedures set forth in this Agreement; and
e. In the event capital assets acquired with Project funds are to be sold, leased, or licensed to or operated by a private entity, the sale, lease, license, or operating agreement:
    i. must be approved by the applicable oversight entity (if any) in accordance with §§ 13-6-2, 13-6-2.1, and 13-6-3; or
    ii. If no oversight entity is required to approve the transaction, the Department of Finance and Administration's Infrastructure Planning Development Division (IPDD) must approve it as complying with the law.

B. Prior to the sale, lease, license, or operating agreement being approved pursuant to Articles II(A)(e) (i) or (ii) herein, the Department may, in its sole and absolute discretion, unless inconsistent with State Board of Finance imposed conditions, reimburse Grantee for necessary expenditures incurred to develop the Project sufficiently to make the sale, lease, license, or operating agreement commercially feasible, limited to planning and design expenditures; and

C. Grantee's submission of documentation of all Third Party Obligations and amendments thereto (including terminations) to the Department and the Department's issuance of a Notice of Obligation for a particular amount in accordance with the terms of this Agreement shall be governed by the following:

a. Grantee is authorized to budget the particular amount set forth in the Notice of Obligation, execute the Third Party Obligation, and request the Third Party to begin work after issuance of a Notice of Obligation by the Department.
b. Grantee acknowledges and agrees that any Third Party Obligations agreed to prior to receiving a Notice of Obligation are its sole responsibility.
c. Grantee shall submit to the Department one copy of all Third Party Obligations and amendments thereto (including terminations) as soon as possible after execution by the Third Party but prior to execution by the Grantee.
d. Department may, in its sole and absolute discretion, issue a Notice of Obligation for the particular amount of a Third Party Obligation that only obligates the Department to reimburse Grantee's expenditures made on or before the Reversion Date or an Early Termination Date. The current Notice of Obligation form is incorporated herein and attached hereto as **Exhibit B.**

D. Grantee shall provide all necessary qualified personnel, materials, and facilities to implement the Project. The Grantee shall finance its share (if any) of the costs of the Project, including all Project overruns.

E. Prior to entering into this Agreement, the Department conducted a risk assessment on the Grantee and a project readiness review for the Project. In accordance with State Model Accounting Practices, FIN 9.2, if the Department determines that the expenditure of Project funds by the Grantee requires special conditions, those conditions are identified and listed in **Exhibit C**, which is attached and incorporated by reference. The Parties agree that, to the extent the Department, in its sole and absolute discretion, determines additional special conditions are necessary or that existing special conditions are no longer

required, it may update **Exhibit C** from time to time without the need for a formal amendment of this Agreement.

F. Project funds shall not be used for purposes other than those authorized by the Department in accordance with the Project Description.

G. Project funds cannot be used to reimburse the Grantee for indirect Project costs unless specifically allowed by law.

III. NOTICES

The following provisions shall apply whenever written notices, including written decisions, are to be given or received related to this Agreement.

A. The Grantee designates the person(s) listed below, or their successor, as their official representative(s) concerning all matters related to this Agreement:

Grantee: City of Santa Fe
Name: Alan Webber
Title: Mayor
Address: PO Box 909 Santa Fe, NM 87504
Email: amwebber@santafenm.gov
Telephone: (505) 955-6590

B. The Grantee designates the person(s) listed below, or their successor, as their Fiscal Officer or Fiscal Agent concerning all matters related to this Agreement:

Grantee: City of Santa Fe
Name: Emily Oster
Title: Finance Director
Address: PO Box 909 Santa Fe, NM 87504
Email: ekoster@santafenm.gov
Telephone: (505) 955-6885

C. The Department designates the persons listed below, or their successors, as the Points of Contact for matters related to this Agreement.

Environment Department
Name: Roy Hubbard
Program Administrator
NMENV-cpbsap@state.nm.us or roy.hubbard@env.nm.gov
Telephone: 505-670-3615

Environment Department
Name: Andrea Telmo
Project Manager
Email: andrea.telmo@env.nm.gov
Telephone: 505-618-0484

Environment Department

Sara Rhoton
Technical Section Manager
Sara.rhoton@env.nm.gov
Telephone: 505-469-2687

The Parties agree that all notices, including written decisions, related to this Agreement shall be sent to the persons named above by email or regular mail. For mailings, notices shall be deemed to have been given and received upon the date of the receiving party's actual receipt or five (5) calendar days after mailing, whichever shall first occur. In the case of email transmissions, the notice shall be deemed to have been given and received on the date reflected on the delivery receipt of the email.

IV. TERM & DEADLINE TO EXPEND FUNDS

A. The term of this Agreement shall begin on the Effective Date and terminate on the 30th day of June during the calendar year of the Reversion Date unless Terminated Before Reversion Date ("**Early Termination**") pursuant to Article V herein (collectively "**Term**").

B. The Project's funds must be expended on or before the Reversion Date and, if applicable, the Early Termination Date of this Agreement.

   a. For purposes of this Agreement, it is not sufficient for the Grantee to encumber the Project funds on its books on or before the Reversion Date or Early Termination Date.
   b. For purposes of this Agreement, an expenditure of funds has occurred on the date the particular quantity of goods is delivered to and received by the Grantee, title to the goods is transferred to the Grantee, and/or as of the date particular services are rendered to and accepted by the Grantee.
   c. For purposes of this Agreement, an encumbrance of funds pursuant to a contract or purchase order with a third party does not qualify as an expenditure.

V. EARLY TERMINATION

A. General Provision. The Department may terminate this Agreement before the Reversion Date based on the Completion of the Project, Complete Expenditure of the Adjusted Appropriation, and/or Violation of this Agreement. Early Termination hereunder includes:

   a. Termination due to completion of the Project before the Reversion Date;
   b. Termination due to complete expenditure of the Adjusted Appropriation Amount before the Reversion Date;
   c. Termination for violation of the terms of this Agreement; or
   d. Termination for suspected mishandling of public funds, including but not limited to fraud, waste, abuse, and conflicts of interest.

B. Non-appropriation. This Agreement is expressly contingent upon the New Mexico State Legislature making sufficient appropriations and authorizations for the Project Description.

   a. If the Legislature does not appropriate the Appropriation Amount, this Agreement shall terminate upon the Department giving the Grantee written notice of such termination. Such termination shall be effective as of the effective date of the law making the non-appropriation.
      i. The Department's decision as to whether sufficient appropriations or authorizations are available shall be final. Grantee hereby waives any rights to assert an impairment of

contract claim against the State of New Mexico in the event of Early Termination of this Agreement.

b. As used herein, "non-appropriate" or "non-appropriation" includes the following actions by the New Mexico Legislature:
    i. Deauthorization, reauthorization, or revocation of a prior authorization.

C. Grant Disbursements in the Event of Early Termination. In the event of Early Termination, the Department's sole and absolute obligation to reimburse the Grantee is expressly conditioned upon the limitations set forth in Article II above.

D. Notice. Either Party may terminate this Agreement prior to the Reversion Date by providing the other Party with a minimum of fifteen (15) days advance written notice of the Early Termination. Grantee hereby waives any rights to assert an impairment of contract claim against the State of New Mexico in the event of Early Termination of this Agreement by the Department.

VI. SUSPENSION OF NEW OR FURTHER OBLIGATIONS

A. Department, in its sole and absolute discretion, may provide written notice to Grantee to suspend entering into further obligations. Upon the receipt of such written notice by the Grantee:

a. Grantee shall immediately suspend entering into new or further written obligations with third parties;
b. Department will suspend the issuance of any new or further Notice of Obligation under this Agreement; and
c. Department may direct the Grantee to implement a corrective action plan in accordance with Article VI (D) herein.

B. In the event of Suspension of this Agreement, the Department's sole and absolute obligation to reimburse the Grantee is expressly conditioned upon the limitations set forth in Article II herein.

C. A suspension of new or further obligations under this Agreement shall remain in effect unless or until the date the Grantee receives written notice given by the Department informing the Grantee that the Suspension has been lifted or that the Agreement has been Early Terminated in accordance with Article V herein. If the Suspension is lifted, the Department will consider further requests for a Notice of Obligation.

D. Corrective Action Plan in the Event of Suspension. Where the Department, in its sole and absolute discretion, directs Grantee to suspend entering into new or further written obligations with third parties pursuant to Article VI(A), the Department may, but is not obligated to, require the Grantee to develop and implement a written corrective action plan to remedy the grounds for the Suspension.

a. Such a corrective action plan must be approved by the Department and be signed by the Grantee.
b. Failure to sign a corrective action plan or meet the terms and deadlines set forth in the signed corrective action plan is hereby deemed a violation of the terms of this Agreement for purposes of Early Termination, Article V(A)(c).
c. A corrective action plan shall be in addition to, and not in lieu of, any other equitable or legal remedy authorized hereunder or at law, including but not limited to Early Termination.

VII. AMENDMENTS

Unless expressly stated otherwise herein, this Agreement shall not be altered, changed, or amended except by an instrument in writing duly executed by both parties hereto with the same formalities as this agreement.

VIII. REPORTING

A. Database Reporting

a. Grantee shall provide the Department with quarterly reports of Project activity, entering the required Project information directly into a database required by the Department.
b. Additionally, Grantee shall certify on each Request for Payment form, attached hereto as **Exhibit A** and incorporated herein, that all information provided in the database is true and accurate, updates to the database have been maintained, and all Project activity complies with applicable law and the terms of this Agreement.
c. Grantee hereby acknowledges that failure to perform and/or certify updates to the database will jeopardize the reimbursement of funds. The Department shall give Grantee a minimum of fourteen (14) days' advance written notice of any changes to the information the Grantee is required to report.
d. At the Department's discretion, all reports required hereunder may be directed to and facilitated through an electronic database.
e. Quarterly reports shall be due on the last day of the month, that is, 30 days prior to the end of the quarter following the execution of this Agreement by the Department and ending during the quarter of the submission of the final request for reimbursement for the Project, or the following quarter.

B. Requests for Additional Information/Project Inspection

During the term of this Agreement and during the period of time during which the Grantee must maintain records pursuant to Article VIII, the Department may:

i. request such additional information regarding the Project as it deems necessary; and
ii. conduct, at reasonable times and upon reasonable notice, onsite inspections of the Project.

Grantee shall respond to such requests for additional information within a reasonable period of time, as established by the Department.

B. Requests for Additional Information/Project Inspection

a. During the term of this Agreement and the Record Retention Period, the Department may:
    i. Request additional information regarding the Project as it deems necessary and
    ii. Conduct on-site inspections of the Project at reasonable times and upon reasonable notice.
b. Grantee shall respond to such requests for additional information within the time established by the Department.

IX. REQUEST FOR PAYMENT PROCEDURES

A. Grantee shall request payment by submitting the form attached hereto as **Exhibit A.** Payment requests are subject to the following procedures:

a. Each Request for Payment must be in accordance with the Project Budget and contain proof of payment by the Grantee or liabilities incurred by the Grantee.
    i. Proof of payment must demonstrate the validity of an expenditure or liabilities incurred by Grantee.

ii. However, Grantee may be reimbursed for unpaid liabilities only if the Department, in its sole and absolute discretion, agrees to do so and in accordance with any special conditions imposed by the Department.
iii. The Grantee shall make payment to those contractors or vendors within five (5) business days from the date of receiving reimbursement from the Department or in a shorter period than the Department may prescribe in writing.
iv. The Department reserves the right to make such payments directly to the contractors or vendors as a special condition under this Agreement.
v. The Grantee is required to certify to the Department proof of payment to the third-party contractor or vendor within five (5) business days from the date the Department reimburses the Grantee.

B. Until the Project is fully planned, designed, and all necessary procurements identified in the Project Budget are completed, Grantee's reimbursements will be limited to the planning, design, and procurement costs outlined in the Project Budget. Once the planning, designing, and procuring stages are complete, the Grantee must obligate at least ten percent (10%) of the Adjusted Appropriation Amount within one (1) year and must have utilized at least eighty-five percent (85%) of the Adjusted Appropriation Amount six (6) months before the reversion date.

C. Deadlines. Grantee shall submit requests for Payments to the Department on the earlier of:

a. Immediately as Grantee receives them, but at a maximum of thirty (30) days from when Grantee incurred the expenditure or liability; or
b. Twenty (20) days from the date of Early Termination or Reversion Date for expenditures or liabilities incurred before the Early Termination date or Reversion Date.

D. Grantee's failure to abide by the requirements set forth in Article II and Article IX herein may result in the denial of its Request for Payment. Department reserves the right to reject a payment request for the Project unless and until it is satisfied that the expenditures or liabilities are for permissible purposes within the meaning of the Project Description, identified within the Project Budget, and that the Grantee is otherwise in compliance with this Agreement.

a. Department's authority to reject any Request for Payment is in addition to, and not in lieu of, any other legal or equitable remedy available to the Department under this Agreement, at law, or in equity.

X. PROJECT CONDITIONS AND RESTRICTIONS

A. The following general conditions and restrictions shall apply to the Project:

a. The Project's funds must be spent in accordance with all applicable state laws, regulations, policies, and guidelines, including, but not limited to, the State Procurement Code.
b. The Project's expenditures and liabilities must be accounted for in accordance with the State's Model Accounting Practices, as amended from time to time.
c. The Project must be implemented in accordance with the New Mexico Public Works Minimum Wage Act, Section 13-4-10 through 13-4-17 NMSA 1978, as applicable.
d. The Project must provide a public benefit above and beyond any incidental benefit to private entities in accordance with applicable law, including, but not limited to, Article IX, Section 14 of the Constitution of the State of New Mexico.

e. Without prior written approval from the Department and State Board of Finance, for the useful life of any asset purchased under this Agreement, Grantee shall not convert any property acquired, built, renovated, repaired, designed, or developed with Project funds to uses other than those specified in the Project Description.
    i. In addition to other remedies available at law or in equity, any disposal or conversion of property acquired, built, renovated, repaired, designed, or developed with Project funds without the Department's and the Board of Finance's express written approval will trigger the Department's right to reimbursement from Grantee of the Appropriated Amount, transfer proceeds from any disposition of property to the State, or otherwise provide consideration to the State for the Appropriated Amounts.
f. Grantee shall comply with all applicable federal and state laws, rules, and regulations pertaining to civil rights and equal employment opportunity.
    i. In accordance with all such laws, rules, and regulations, the Grantee agrees to assure that no person shall, on the grounds of race, color, national origin, sex, sexual preference, age, or handicap, be excluded from participation in the Project, use of the Project, employment with Grantee, or otherwise be denied benefits/subject to discrimination for any activity performed under this Agreement.
g. Where the Department, in its sole and absolute discretion, determines Grantee has failed to comply with the above conditions and restriction, Grantee agrees to take appropriate steps to correct any deficiencies immediately. The Grantee's failure to implement such appropriate steps within a reasonable time, but no longer than thirty (30) days after notice from the Department, constitutes a breach of this Agreement and grounds for Early Termination.

XI. REPRESENTATIONS AND WARRANTIES

A. Reliance by Department.
    a. Grantee expressly acknowledges that the Department relies on the representations and warranties made by Grantee in this Agreement. Grantee acknowledges that such representations and warranties are a material inducement for the Department to enter into this Agreement and provide the Appropriated Amount.
    b. Grantee shall ensure all representations and warranties provided herein are true, accurate, and complete as of the date of the Effective Date and shall remain so throughout the Term of this Agreement. Grantee is responsible for promptly notifying the Department in writing of any changes or inaccuracies in the representations and warranties contained herein.

B. Grantee hereby represents and warrants the following:

    a. Grantee has taken all necessary steps to attain the legal authority to receive and expend the Project's funds.
    b. Grantee has duly authorized this Agreement, and the person executing it has authority to do so. Once executed by Grantee, this Agreement shall constitute a binding obligation of Grantee, enforceable according to its terms.
    c. Grantee's obligations hereunder do not conflict with any law, ordinance, or resolution applicable to Grantee, Grantee's charter (if applicable), or any judgment or decree to which Grantee is subject.
    d. Grantee has independently confirmed that the Project Description, including, but not limited to, the Appropriated Amount and Reversion Date, is consistent with the underlying appropriation in law.
    e. Grantee's governing body has duly adopted or passed as an official act a resolution, motion, or similar action authorizing the person identified as the official representative of the Grantee to sign and submit Requests for Payment on behalf of Grantee.

f. Grantee will abide by New Mexico laws regarding conflicts of interest, governmental conduct, and whistleblower protection.
    i. Grantee agrees explicitly none of its officers or employees or its designees or agents, no member of the governing body, and no other public official of Grantee who exercises any function or responsibility with respect to this Agreement, shall have any interest, direct or indirect, in any contract or subcontract, or the proceeds thereof, for the Project.
    ii. Further, Grantee will require all of its contractors to incorporate the language set forth in this paragraph prohibiting conflicts of interest in all subcontracts.
g. No funds have been paid or will be paid, by or on behalf of the Grantee, to any person for influencing or attempting to influence an officer or employee of the State, any agency, or body in connection with the awarding of any Third Party Obligation.
    i. Grantee will require certifying language prohibiting lobbying to be included in the award documents for all subawards, including subcontracts, loans, and cooperative agreements.

C. Consequences of False or Misleading Representations. If any representation or warranty made by Grantee is found to be false or misleading, the Department shall have the right to exercise any or all of the following remedies:

a. **Termination of Agreement:** Department may terminate this Agreement immediately upon written notice to the Grantee.
b. **Repayment of Grant Funds:** Grantee shall repay all Appropriated Amounts disbursed under this Agreement, upon demand by the Department.
c. **Other Remedies:** Department may pursue any other remedies available at law or in equity.

D. Survival of Representations and Warranties. The representations and warranties made by the Grantee shall survive the Early Termination or expiration of this Agreement.

XII. PROJECT RECORDS

A. Grantee shall be strictly accountable for receipts and disbursements relating to the Project's funds. The Grantee shall follow generally accepted accounting principles and the State's Model Accounting Practices and, if feasible, maintain a separate bank account or fund with a separate organizational code to ensure separate budgeting and accounting of the funds.

B. For six (6) years following the Project's completion ("**Record Retention Period**"), Grantee shall maintain all Project-related records, including, but not limited to, all financial records, requests for proposals, invitations to bid, selection and award criteria, contracts and subcontracts, advertisements, minutes of pertinent meetings, as well as records sufficient to fully account for the amount and disposition of the Appropriated Amount from all sources budgeted for the Project, the purpose for which such funds were used, and such other records as the Department may prescribe.

C. Grantee shall make all Project records available to the Department, the Department's Independent Public Accountant, and the New Mexico State Auditor upon request. With respect to the funds that are the subject of this Agreement, if the State Auditor or the Department finds any funds were improperly expended, Grantee shall be required to reimburse the State all amounts found to be improperly expended.

XIII. IMPROPERLY REIMBURSED FUNDS

If the Department determines part or all of the Appropriation Amount was improperly reimbursed to Grantee, including but not limited to funds reimbursed to Grantee based upon fraud, mismanagement, misrepresentation,

misuse, violation of law by the Grantee, after ten (10) days' notice to Grantee and the opportunity to return such funds to the Department, the Department may offset any funds due to Grantee from the State, until the Appropriation Amount is fully repaid.

XIV. LIABILITY

Neither Party shall be responsible for liability incurred as a result of the other Party's acts or omissions in connection with this Agreement. Any liability incurred in connection with this Agreement is subject to immunities and limitations of the New Mexico Tort Claims Act.

XV. SCOPE OF AGREEMENT

This Agreement constitutes the entire and exclusive agreement between the Parties concerning the subject matter hereof. The Agreement supersedes all prior or contemporaneous agreements, understandings, discussions, communications, and representations, written or verbal.

XVI. REQUIRED NON-APPROPRIATIONS CLAUSE

A. Grantee acknowledges and agrees to include a "non-appropriations" clause in all contracts between it and other parties that are (i) funded in whole or part by funds made available under this Agreement and (ii) entered into after the effective date of this Agreement that states:

   a. "The terms of this Agreement are contingent upon sufficient appropriations and authorization being made by the Legislature of the State of New Mexico ("**Legislature**") for the performance of this Agreement.
   b. If the Legislature does not make sufficient appropriations and authorization, [Grantee's name] may immediately terminate this Agreement by giving Contractor written notice of such termination.
   c. [Grantee's name]'s decision as to whether sufficient appropriations are available shall be final and accepted by the Contractor. Contractor hereby waives any rights to assert an impairment of contract claim against the [Grantee's name] or the State of New Mexico in the event of immediate or Early Termination of this Agreement by the [Grantee's name] or the State Department of Finance and Administration."

XVII. REQUIRED TERMINATION CLAUSE

A. Grantee acknowledges and agrees to include the following termination clause in all contracts that are (i) funded in whole or part by funds made available under this Agreement and (ii) entered into after the effective date of this Agreement:

   a. "This contract is funded in whole or in part by funds made available by the State of New Mexico ("**State**"). Should the State terminate its Agreement with [Grantee's name], [Grantee's name] may terminate this contract immediately by providing Contractor written notice of such termination.
   b. In the event of termination pursuant to this paragraph, [Grantee's name] only liability to Contractor shall be for goods and services delivered and accepted prior to the termination date."

XVIII. COMPLIANCE WITH UNIFORM FUNDING CRITERIA

A. Throughout the term of this Agreement, Grantee shall:

   a. Submit all reports of annual audits and agreed-upon procedures required by § 12-6-3(A)-(B), NMSA 1978 by the due dates established in § 2.2.2 NMAC, reports of which must be a public

record pursuant to § 12-6-5(A), NMSA 1978 within forty-five (45) days of delivery to the State Auditor;
b. Have a duly adopted budget for the current fiscal year approved by its budgetary oversight agency (if any);
c. Timely submit all required financial reports to its budgetary oversight agency (if any); and
d. Use accounting methods and procedures consistent with Generally Accepted Accounting Principles and the State's Model Accounting Principals to expend the Appropriated Amount in accordance with applicable law and account for and safeguard Project funds and assets acquired with Project funds.

B. In the event Grantee fails to comply with the requirements of subparagraph A of this Article XVIII, Department may take one or more of the following actions:

a. Suspend new or further obligations pursuant to Article VI(A) of this Agreement;
b. Require the Grantee to develop and implement a written corrective action plan pursuant to Article VI(D) of this Agreement to remedy the non-compliance;
c. Impose special conditions to address the non-compliance by giving Grantee notice of such special conditions in accordance with Article III of this Agreement;
    i. The Parties agree that any special conditions imposed to address non-compliance shall be incorporated into this Agreement, through **Exhibit C**, upon notice to Grantee, without need for formal amendment of this Agreement;
    ii. Special conditions shall be binding and effective on the date that notice is deemed to have been given pursuant to Article III or
d. Terminate this Agreement pursuant to Article V(A) of this Agreement.

XIX. SEVERANCE TAX AND GENERAL OBLIGATION BONDS

A. Grantee acknowledges and agrees that the underlying appropriation for the Project may originate from the issuance of tax-exempt severance tax bonds or general obligation bonds by the State. Proceeds from such bonds are administered by the New Mexico State Board of Finance ("**SBOF**"), an entity separate and distinct from the Department.

a. Grantee acknowledges and agrees:
    i. It is Grantee's responsibility to determine through SBOF what (if any) conditions are currently imposed on the Project;
    ii. Department's failure to inform Grantee of an SBOF-imposed condition does not affect the validity or enforceability of the condition;
    iii. The SBOF may in the future impose further or different conditions upon the Project;
    iv. All SBOF conditions are attached to the Project and Appropriation Amount without the need for formal amendment of this Agreement;
    v. All applicable SBOF conditions must be satisfied before the SBOF will release to the Department funds subject to the condition(s) and
    vi. The Department's obligation to reimburse Grantee from the Project is expressly contingent upon the satisfaction of the then-current SBOF conditions.

B. Grantee acknowledges and agrees SBOF may, at its sole and absolute discretion, require reimbursement or remove eligibility for bond proceeds for the Project if the Project doesn't proceed sufficiently.

a. Grantee must comply with the requirement to encumber five percent (5%) of Project funds within six months of bond issuance as certified by Grantee in the Bond Questionnaire and Certification documents submitted to the SBOF.

b. Failure to comply may result in the reassignment of the bond proceeds. Upon reassignment of bond proceeds, this Agreement will be suspended until the entity has demonstrated readiness as determined by the SBOF and the Department.

C. Grantee acknowledges and agrees that this Agreement is subject to the SBOF's Bond Project Disbursements rule, § 2.61.6, NMAC, as may be amended from time to time or re-codified.

XX. GENERAL PROVISIONS

A. Assignment: Grantee's rights and obligations under this Agreement are personal and may not be transferred or assigned without the prior written consent of the State. Any attempt at assignment or transfer without such consent shall be void. Any assignment or transfer of Grantee's rights and obligations approved by the State shall be subject to the provisions of this Agreement.

B. Subcontractors: Grantee shall not enter any subgrant or subcontract in connection with its obligations under this Agreement without the prior written approval of the State. Upon request, Grantee shall submit to the Department a copy of each such subgrant or subcontract.

C. Binding Effect: Except as otherwise provided, all provisions of this Agreement, including the benefits and burdens, shall extend to and be binding upon the Parties' respective successors and assigns.

D. Authority: Each Party represents and warrants to the other that the execution and delivery of this Agreement and the performance of such Party's obligations have been duly authorized.

E. Captions and References: The captions and headings in this Agreement are for the convenience of reference only and shall not be used to interpret, define, or limit its provisions. All references in this Agreement to sections (whether spelled out or using the § symbol), subsections, exhibits, or other attachments are references to sections, subsections, exhibits, or other attachments contained herein or incorporated as a part hereof, unless otherwise noted.

F. Counterparts: This Agreement may be executed in multiple, identical, original counterparts, each of which shall be deemed to be an original, but all of which, taken together, shall constitute the same agreement.

G. Digital Signatures: If any signatory signs this agreement using a digital signature in accordance with the State Policies regarding the use of digital signatures, then any agreement or consent to use digital signatures within the electronic system through which that signatory signed shall be incorporated into this Agreement by reference.

H. Modification: Except as otherwise provided in this Agreement, any modification to this Agreement shall only be effective if agreed to in a formal amendment, properly executed and approved in accordance with applicable New Mexico law and State fiscal policies and rules. Modifications permitted under this Agreement, other than Agreement amendments, shall conform to the policies issued by the State.

I. Statutes, Regulations, Fiscal Rules, and Other Authority: Any reference in this Agreement to a statute, regulation, policy, or other authority shall be interpreted to refer to such authority then current, as may have been changed or amended after the Effective Date of this Agreement.

J. External Terms and Conditions: Notwithstanding anything to the contrary herein, the State shall not be subject to any provision included in any terms, conditions, or agreements appearing on Grantee's or a subcontractor's website or any provision incorporated into any click-through or online agreements related to the Work unless that provision is specifically referenced in this Agreement.

K. Severability: The invalidity or unenforceability of any provision of this Agreement shall not affect the validity or enforceability of any other provision of this Agreement, which shall remain in full force and

effect, provided that the Parties can continue to perform their obligations under this Agreement in accordance with its intent.

L. Survival of Certain Agreement Terms: Any provision of this Agreement that imposes an obligation on a Party after the termination or expiration of this Agreement shall survive the termination or expiration of this Agreement and shall be enforceable by the other Party.

M. Third Party Beneficiaries: Except for the Parties' respective successors and assigns described in this Agreement, it does not and is not intended to confer any rights or remedies upon any person or entity other than the Parties. Enforcement of this Agreement and all rights and obligations hereunder are reserved solely to the Parties. Any services or benefits that third parties receive as a result of this Agreement are incidental to this Agreement and do not create any rights for such third parties.

N. Waiver: A Party's failure or delay in exercising any right, power, or privilege under this Agreement, whether explicit or by lack of enforcement, shall not operate as a waiver, nor shall any single or partial exercise of any right, power, or privilege preclude any other or further exercise of such right, power, or privilege.

O. Standard and Manner of Performance: Grantee shall perform its obligations under this Agreement in accordance with the highest standards of care, skill, and diligence in Grantee's industry, trade, or profession.

P. Licenses, Permits, and Other Authorizations: Grantee shall secure, prior to the Effective Date, and maintain at all times during the term of this Agreement, at its sole expense, all licenses, certifications, permits, and other authorizations required to perform its obligations under this Agreement and shall ensure that all employees, agents, and subcontractors secure and maintain at all times during the term of their employment, agency or subcontractor, all license, certifications, permits and other authorizations required to perform their obligations in relation to this Agreement.

Q. Publicity: Any Publicity regarding the subject matter of this Agreement may not be released without prior written approval from the Department. For purposes of this agreement, "**Publicity**" means notices, informational pamphlets, press releases, email responses, research, reports, signs, and similar public notices prepared by or for the Grantee or jointly with others.

   a. Grantee shall obtain written approval prior to issuing any press release or making any public announcement regarding this agreement. Grantee agrees to obtain approval of the Department in advance with respect to all Public Relations, all communications with media, or all communications with any other member of the public with respect to this agreement, except to acknowledge that an agreement does exist.
   b. For purposes of this agreement, "Public Relations" includes community relations and means those activities dedicated to maintaining the Department's image or maintaining or promoting understanding and favorable relations with the community or public at large or any segment of the public.
   c. Violations of either Article XX (Q)(a) or (b) shall constitute a material Breach of Agreement.

R. Data Sharing: The State intends to secure and collate specific data generated by Grantee under this Agreement to use in support of the State's organizational, policy-making, and management of public resource functions. State, in accordance with **Exhibit E**, attached hereto and incorporated herein by reference, reserves the right to require Grantee and/or its subcontractors to provide specific data relevant to the above-listed functions. Data provided by Grantee may be incorporated into existing or future

developed State integrated analysis tools or databases, including but not limited to geographic information system (GIS) networks and databases accessible by the public. Dissemination of data collected may include historical data and projections based on such historical data.

a. To the extent any data transferred as part of this Agreement is legally determined to be the property of Subrecipient or its subcontractors, Subrecipient and/or its subcontractors grants State a nonexclusive, fully paid-up right and license to reproduce, use, distribute, do derivative works based on, and archive data transferred as part of this Agreement.

S. Venue and Choice of Law: This Agreement shall be governed by and construed in accordance with the laws of the State of New Mexico, without regard to any conflict of law provisions. Any legal suit, action, or proceeding arising out of or related to this Agreement shall be instituted exclusively in the district courts located in Santa Fe, New Mexico. The Parties hereby irrevocably submit to the exclusive jurisdiction and venue of such courts in any such suit, action, or proceeding. The Parties waive any objection to the laying of the venue of any such suit, action, or proceeding in the district courts of Santa Fe, New Mexico, and irrevocably waive and agree not to plead or claim in any such court that any such suit, action, or proceeding brought in any such court has been brought in an inconvenient forum.

[SIGNATURE PAGE AND EXHIBITS FOLLOW]
[THIS SPACE LEFT BLANK INTENTIONALLY]

IN WITNESS WHEREOF, the parties have duly executed this Agreement as of the Department's date of execution.

APPROVED BY GRANTEE:

_____
Entity Name

Official with Authority to Bind Grantee:

_____
Signature

_____ _____
(Print Name) (Title)

_____
Date

ATTEST:

_____
Signature

_____ _____
(Print Name) (Title)

_____
Date

[ADDITIONAL SIGNATURES ON FOLLOWING PAGE]

Fiscal Officer or Chief Financial Officer: (OPTIONAL)

BRIAN MOYA

Signature

BRIAN MOYA | Interim City Manager

(Print Name) | (Title)

Jan 12, 2026

Date

Legal Counsel:

Kevin L. Nault

Kevin L. Nault (Nov 25, 2025 00:25:17 MST)

Signature

Kevin L. Nault | Assistant City Attorney

(Print Name) | (Title)

Nov 25, 2025

Date

APPROVED BY DEPARTMENT:

New Mexico Environment Department

Dennis Romero, P.E., Bureau Chief, NMED Construction Programs Bureau

Signed pursuant to the June 23, 2025, Secretary of Environment Delegation Order

EXHIBIT A

Request for Payment Form and Certification

Rev. July 2025

NEW MEXICO ENVIRONMENT DEPARTMENT

CONSTRUCTION PROGRAMS BUREAU

NMED DISBURSEMENT REQUEST

SPECIAL APPROPRIATIONS PROGRAM (SAP)

A. NAME OF ENTITY

B. PROJECT NUMBER

C. DISBURSEMENT REQUEST NUMBER

D. GRANT AMOUNT

	PROJECT BUDGET		PREVIOUS EXPENDITURES		CURRENT EXPENDITURES		CUMULATIVE		FUNDS REMAINING	
	NMED PROGRAM	OTHER FUNDS	NMED PROGRAM	OTHER FUNDS	NMED PROGRAM	OTHER FUNDS	NMED PROGRAM	OTHER FUNDS	NMED PROGRAM	OTHER FUNDS
Engineer Fees										
Other Professional										
Service Fees										
Inspection Fees										
Property Acquisition										
Construction Cost										
Planning Cost										
Equipment										
Other Costs (specify)										
Contingencies										
TOTAL										

Article IX.A. (iii). By checking this box you are stating that payment has NOT been paid to the vendors associated with this request. Upon receipt of payment from NMED, certification of payment will be sent within 10 days from the date of receiving reimbursement.

Article IX. A. (ii). By checking this box you are certifying that the vendors associated with this request have been paid.

Certification: I hereby certify that all conditions and requirements for Payments outlined in the Agreement have been met, including but not limited to:
a. Submission and approval of a Project Budget as per Article IV, Section A of the Agreement.
b. Compliance with the Project Budget and expenditure of funds in accordance with the State Procurement Code and the State's Model Accounting Practices.
c. Submission of supporting documentation as required by the Agreement.
d. Maintenance of all necessary records and documentation as stipulated in the Agreement.

Certification: I attest that the information provided is correct; expenditures are properly documented and valid or actual receipts, and that the activity fully complies with Article IX, Sec. 14 of the New Mexico Constitution, known as the "anti-donation" clause.

Certification: I hereby certify that all representations and warranties made in the Agreement remain true, accurate, and complete as of the date of this request, and will continue to be so throughout the term of the Agreement. I acknowledge that these representations and warranties are a material inducement for the Department to approve this pay request.

Reporting Certification: I hereby certify to the best of my knowledge and belief, that the database reporting is up to date; to include the accuracy of the expenditures and grant balance, project status, project phase, achievements and milestones, and in compliance with Article VIII of the Capital Outlay Grant Agreement.

Signature of Official Representative:	Typed or Printed Name:	Phone:	Date:
X			

NOTICE OF OBLIGATION TO REIMBURSE GRANTEE
EXHIBIT B

Notice of Obligation to Reimburse Grantee # _____

DATE: _____

TO: Department Representative: _____, Grant Manager

FROM: Grantee Entity: _____

Grantee Official Representative: _____

SUBJECT: Notice of Obligation to Reimburse Grantee

Grant Number: _____

Grant Termination Date: _____

As the designated representative of the Department for Grant Agreement number _____ entered into between Grantee and the Department, I certify that the Grantee has submitted to the Department the following third party obligation executed, in writing, by the third party's authorized representative:

Vendor or Contractor: _____

Third Party Obligation Amount: _____

Vendor or Contractor: _____

Third Party Obligation Amount: _____

I certify that the State is issuing this Notice of Obligation to Reimburse Grantee for permissible purposes within the scope of the project description, subject to all the terms and conditions of the above referenced Grant Agreement.

Grant Amount (Minus AIPP if applicable): _____

The Amount of this Notice of Obligation: _____

The Total Amount of all Previously Issued Notices of Obligation: _____

The Total Amount of all Notices of Obligation to Date: $ 0.00

Note: Contract amounts may exceed the total grant amount, but the invoices paid by the grant will not exceed the grant amount.

Department Rep. Approver: _____

Title: Grant Manager

Signature: _____

Date: _____

1 Administrative and/or Indirect Cost – generally, the legislation authorizing the issuance of bonds prohibits the use of its proceeds for indirect expenses (e.g. penalty fees or damages other than pay for work performed, attorney fees, and administrative fees). Such use of bond proceeds shall not be allowed unless specifically authorized by statute.

Revised 7/2025

EXHIBIT E

Data Sharing Provisions

Data Sharing Provisions for New Mexico Capital Outlay Agreements

I. Introduction:

This Data Sharing Provisions Exhibit ("Exhibit") is incorporated into the New Mexico Capital Outlay Agreements ("Agreements") between the State of New Mexico ("State") and [Insert Partner Name] ("Partner"). This Exhibit outlines the terms and conditions under which data will be shared between the Parties to ensure compliance with New Mexico state laws and regulations, focusing on data privacy, security, and compliance.

II. Definitions:

a. Authorized User: An employee, agent, assign, representative, independent contractor, or other person or entity authorized by Partner or State to access, use, or disclose information through this exhibit.

b. Confidential Information: All data or information shared in confidence, with the expectation that it will not be disclosed in an identifiable form. This includes data that is exempt from public disclosure under the New Mexico Inspection of Public Records Act (§ 14-2-1 et seq. NMSA 1978) or other relevant laws.

c. Data Storage: Electronic media that hold recorded information.

d. Data Transmission: The process of moving information over a network from its source to one or more destinations.

e. Direct Identifier: Records or data containing personal identifiers such as names, addresses, and social security numbers.

f. Disclosure: Permission to access, release, transfer, or otherwise communicate confidential information by any means to any third party, except as authorized by the Party that controls the record.

g. Encryption involves using algorithms to encode data, rendering it unreadable without a specific key. It may be necessary during data transmission and/or storage.

h. Information: Any data, figures, statistics, or other facts provided or learned about someone or something, including Confidential Information, that may be legally transmitted under this Exhibit.

i. Limited Dataset: A data file that omits Direct Identifiers.

j. Protected Personally Identifiable Information: Sensitive personal details such as social security numbers and financial account numbers, with specific exclusions as outlined in the Agreements.

III. Purpose:

The purpose of this exhibit is to promote transparency, facilitate information sharing between the parties, support better policy and decision-making, and enhance public services through collaborative data analysis from various sources.

IV. Use of Information:

a. Use of Information obtained or created under this exhibit shall be strictly limited to the purposes stated herein and in the agreements. The parties agree not to sell Information to third parties or use it for commercial, solicitation, or political purposes.

b. Each Party shall serve as the custodian of the Information and comply with all conditions for its use, including security measures to prevent unauthorized access.

c. The Parties shall follow all relevant federal and state laws and regulations governing the use of such Information.

V. Safeguarding Information:

a. Confidentiality: Access to Confidential Information shall be limited to the minimum necessary to accomplish the purposes of this Exhibit. Authorized Users must adhere to the confidentiality requirements.

b. Security: Security practices shall comply with the requirements of the New Mexico Department of Information Technology Act and related regulations. The Parties agree to notify each other within three business days of any suspected or actual security breach.

c. Information Storage and Transmission: Data Storage and Transmission shall take place on an encrypted server with appropriate security controls.

VI. Re-Disclosure of Information:

The Parties agree not to disclose Information except as required by law or with prior written approval of the other Party. If there is a public records request, the Party receiving it shall notify the other Party within three business days.

VII. Ownership of Information:

Legal title to Information shall remain with the provider. The Partner grants the State a royalty-free, non-exclusive, non-transferable license to use the Information in furtherance of the purposes outlined in this Exhibit.

Capital Appropriations Certification Document

Article IX. A. (ii) and (iii)

(City of Santa Fe SAP 25-J2459-GF)

Payment Request No_____

I certify that payment to all vendors on the above referenced payment request were paid no more than ten (10) days after receiving reimbursement from NMED.

Official Representative, Signed Name, Printed Name, Date

ATTACHMENT A

NEW MEXICO ENVIRONMENT DEPARTMENT
CONSTRUCTION PROGRAMS BUREAU

PROJECT BUDGET

GRANTEE: City of Santa Fe

PROJECT NO: SAP 25-J2459-GF

Please provide a comprehensive procurement plan and expenditure plan, detailing a Project timeline with milestones, required procurements, and identifying expected expenditures per milestone, referred to collectively as the "Project Budget." While it can be difficult to estimate costs and timelines, setting a plan for these can help keep realistic expectations and goals to keep a project moving forward to achieve the project scope and objectives. Contact your NMED-CPB Project Manager with questions.

1) **Expenditure Plan.** Indicate what expenses funding will be used.

Detailed Expenditure Plan		
USES OF FUNDS	**NMED PROGRAM**	**OTHER FUNDS**
Engineer Fees		
Other Professional		
Service Fees		
Inspection Fees		
Property Acquisition		
Construction Cost		
Planning Cost		
Equipment		
Other Costs (specify)		
Contingencies		
TOTAL	$ -	$ -

2) **Procurement Plan.** Describe how engineering or professional services, construction contractors, equipment, or other goods or services will be procured.

Chief Procurement Officer

All Public Bodies are required by 13-1-95.2 NMSA 1978 to have a Chief Procurement Officer to conduct all procurement activities.

Who is your Chief Procurement Officer (CPO)? _____

Describe how you will secure CPO services, if you currently do not have a CPO. _____

_____

Professional Services

Have engineering or professional services already been procured and contracted? _____

If not, describe how you will procure engineering or professional services_____

Reminders:

- COSTS ABOVE $60,000, require solicitation of services via a Request for Proposal (RFP).
- COSTS BELOW $60,000 must adhere to 13-1-125 NMSA 1978 and procurements cannot be artificially divided into smaller units to circumvent legal requirements, such as formal solicitation.
- MULTI-TERM CONTRACTS can be renewed for up to four years 13-1-150 NMSA 1978. Monitor the remaining time on your contracts and plan for renewal in advance.

Construction

Contractors must be hired using a public bidding process for any project over $60,000 (13-1-125 NMSA 1978) and procurements cannot be artificially divided into smaller units to circumvent legal requirements, such as formal solicitation.

Equipment Purchase

Equipment purchase must follow proper procurement code. Please see Chapter 13 Public Purchase and Property NMSA 1978.

3) Project Timeline. Setting a timeline can help keep a project on track to meet required expenditure deadlines. *(An example schedule is provided below.)*

Project Timeline:

OVERALL – MILESTONES		*EXPECTED EXPENDITURE PER MILESTONE*
ESTIMATED START DATE		
5% FUNDS OBLIGATED*		
ESTIMATED END DATE		
DETAILED – PHASES		
TOTAL		$

***Disclaimer:** You have accepted grant funds on the condition that 5% of these funds are to be obligated in a Notice of Obligation within 6 months of bond issuance in accordance with XIX.B.(STB's only) and at least 10% within one (1) year in accordance with IX.B (all projects).

You can obligate funds by entering into a contract with an engineer or contractor. State Procurement Code must be followed for the purchase of all goods and services.

Your NMED-CPB project manager will be happy to help you navigate these requirements, so that your grant money can be spent, and your project successfully completed.

Example Timeline:

OVERALL – MILESTONES		*EXPECTED EXPENDITURE PER MILESTONE*
ESTIMATED START DATE	Month 0	
5% FUNDS OBLIGATED*	+ 6 months from start date = Month 6	$100,000
ESTIMATED END DATE	Use detailed schedule below. 2.5- 3 years	
DETAILED – PHASES		
HIRE AN ENGINEER	4 months	
PLANNING DOCUMENT	6 months	$25,000
DESIGN, PERMIT	9 months	$60,000
ADVERTISE FOR BID, AWARD PROJECT	6 months (allow for rebid)	
CONSTRUCTION AND ENGINEERING CONSTRUCTION PHASE SERVICES (START TO FINISH)	Varies widely. 6 months to a year, or more.	$750,000 and $15,000
CLOSEOUT CONSTRUCTION/ FUNDS	1 month at end of construction schedule.	
TOTAL		$850,000

4) **Additional Information.** Please use this space below to provide any additional details about your project you would like to share to show your project plan and readiness.

Grantee Signatory Authority

Print Name

ATTACHMENT B
TECHNICAL REQUIREMENTS
NEW MEXICO ENVIRONMENT DEPARTMENT
CAPITAL OUTLAY

ARTICLE 1 REVIEW

Upon execution of the grant agreement, the Grantee will follow the procedures listed below unless waived in writing by the New Mexico Environment Department (NMED) (payment may be withheld if any of these procedures are not followed by the Grantee).

A. The Grantee must submit copies to NMED of all unexecuted contracts or quotes the Grantee intends to enter in that are related to the project for the creation of a notice of obligation. Only approved eligible expenditures incurred after the effective date of the Grant Agreement shall be reimbursed or paid from these funds.

B. If grant funds are used for construction, a site certificate must be submitted prior to project bid advertisement that certifies all necessary easements, rights-of-way, and/or property upon or through which the project is being constructed have been obtained. The Site Certificate must be signed by an attorney, engineer, surveyor, or title abstractor.

C. If grant funds are used for meter installation, the Grantee must follow the NMED Guidelines for Meter Upgrade Projects. Meters must be installed before payment can be made. Request a copy of the Guidelines from your NMED Project Manager.

D. If grant funds are used for construction, the Grantee will submit notice of the award and a copy of the executed construction contract documents.

E. The Grantee will provide a full-time construction inspector during construction of the project unless NMED determines that part time inspection is adequate for the project. This must be requested and approved by NMED prior to the start of construction.

F. All daily construction inspection reports shall be made available to the NMED upon request.

G. Notwithstanding the inspections performed by the Grantee and its engineer, NMED will have the right to examine all installations comprising the project, including materials delivered and stored on-site for use on the project. Such examinations will not be considered an inspection for compliance with contract plans but will be a general NMED review as described in Article 2 below.

ARTICLE 2 NMED OVERSIGHT

NMED oversight is only for purposes of compliance with applicable state grant requirements, procedures, statutes, and regulations. NMED approval will not be interpreted as a warranty or guarantee of any kind. Responsibility for the design of the project will lie solely with the engineer of record. All defects and their correction will be the responsibility of the Grantee and its contractors and engineers or consultants. Any questions raised by NMED during its inspections and reviews shall be resolved exclusively by the Grantee. The Grantee and its contractors and engineers or consultants will remain responsible for the completion and success of the project. No action by NMED shall relieve the owner, engineer, or contractor of legal responsibilities for the overall integrity of the project, adequacy of the design, safety, or compliance with all applicable regulations.

ARTICLE 3 CLOSEOUT

A. The project will not be considered complete until the work as defined in this agreement has been fully performed, and finally and unconditionally accepted by the Grantee and the engineer of record.

B. If the grant funds are used for purchase of equipment, final payment will be made after receipt of the equipment and equipment title, if applicable. Appraisal reports are required for the purchase of used equipment.

C. If the grant funds are used for construction, final payment will be made after the following items, unless waived by NMED, have been provided to NMED, and have been reviewed and approved by NMED:

i. A certificate of substantial completion including punch list items.

ii. A final certified construction pay request prepared by the Grantee's project engineer and approved by the Grantee.

iii. A written consent of the surety, if any, to final payment.

iv. Complete and legally effective releases or waivers (satisfactory to the Grantee) of all liens arising out of the contract documents and the labor services performed and the materials and equipment furnished there under. In lieu thereof and as approved by the Grantee, contractor(s) may furnish receipts or releases in full; an affidavit of contractor that the releases and receipts include labor, services, materials, and equipment for which a lien could be filed and that all payrolls, material and equipment bills, and other indebtedness connected with the work for which the Grantee or its property might in any way be responsible, have been paid or otherwise satisfied.

v. Certification letter by the Grantee and contractor that the Labor Standards Contract Provisions have been met.

vi. Certification letter of project acceptance by the Grantee and the Grantee's project engineer stating that work has been satisfactorily completed and the construction contractor has fulfilled all of the obligations required under the contract documents with the Grantee, or if payment and materials performance bonds are "called", an acceptance close-out settlement to the Grantee and contractors will be submitted to NMED.

vii. Certification letter from the Grantee confirming receipt and acceptance of the record drawings and operation and maintenance manuals.

A RESOLUTION AUTHORIZING PROJECT SAP 25-J2459-GF **AS DESCRIBED IN ATTACHMENT A, AND** THE ASSIGNMENT OF AUTHORIZED OFFICER(S) AND AGENT(S)

Resolution Number

Whereas, the **Board of Directors / Council / Commission** of **Community / Utility** of **County Name** County of the State of New Mexico shall enter into a Grant Agreement with the State of New Mexico Environment Department, and

Whereas, the Agreement is identified as **Project Number SAP** SAP 25-J2459-GF

NOW THEREFORE, BE IT RESOLVED by the named applicant that:

(Name), **Mayor/ Chairperson / Director / Officer**, or successor is authorized to sign the Grant Agreement for this project, and

(Authorized Office Name), **(Authorized Officer Title)**, (may have more than one) or successor is the OFFICAL REPRESENTATIVE(S) who is authorized to sign all other documents necessary to fulfill the Grant Agreement and the requirements (Project Description, Disbursements and to act as the project contact, and

(Designated Agent or Employee Name), **(Title)**, or successor is the DFA Database contact who is designated to update the database quarterly per Article VIII. A. of the Intergovernmental Grant Agreement.

(Designated Agen or Employee Name, (Title), (may have more than one) or successors is the CONTACT who is designated to receive Notice of Obligations (NOO'S).

PASSED, APPROVED, AND ADOPTED: _____.

Name, Mayor / Chairperson / Director / Officer, Title, Community / Utility

_____ _____

(Signature) **Date**

(SEAL)

ATTEST:

_____

(Municipal Clerk)

Name of Grantee: _City of Santa Fe_____ Project Number: SAP 25-J2459-GF

Current Authorized Signatures (submit with Signature Resolution, update when necessary)

Authorized to Sign Agreement			
Name		Name	
Title		Title	
Signature		Signature	
Address		Address	
Email		Email	
Phone		Phone	
Official Representatives authorized to sign Disbursement Requests and all other documents.			
Name		Name	
Title		Title	
Signature		Signature	
Address		Address	
Email		Email	
Phone		Phone	
Alternate Official Representative, to sign Disbursement Requests and all other documents and act as the Point of Contact.			
Name		Name	
Title		Title	
Signature		Signature	
Address		Address	
Email		Email	
Phone		Phone	
Designated Agent or Employee that will make DFA database updates			
Name		Name	
Title		Title	
Signature		Signature	
Address		Address	
Email		Email	
Phone		Phone	
Notice of Obligations			
Name		Name	
Title		Title	
Signature	No Signature Required	Signature	No Signature Required
Address		Address	
Email		Email	
Phone		Phone	

City of Santa Fe New Mexico

Finance Department

Project Ledger Request Form

Date of Request: 11/19/2025-UPDATED 11/21/25

Project Title: Paseo Real Wastewater Treatment Facility

Project Type: ☑ CIP ☑ Grant ☐ Internal Tracking

Project ID: CIP2455001

Grant ID: S2635

Approved By: ERIKA LUJAN (Nov 24, 2025 08:27:45 MST)

CT (Finance Use Only)

Department: Public Utilities Project Manager: Stan Holland Ext: 4637

Project Date Range: 11/19/25 to 6/30/2029 ☐ Create Fixed Asset

---

☐ Multi-Funding (complete all funding sources, should equal 100%)

Funding Source: NMED SAP 25-J2459-GF % of Funding: 100%

MUNIS ORG: 5000375 MUNIS OBJ: 490190 Awarded Amount: $100,000

Funding Source: _____ % of Funding: _____

MUNIS ORG: _____ MUNIS OBJ: _____ Awarded Amount: _____

Expense String Phase:

A project must have at least one phase identified, this can be used as an additional level of tracking, for example, CIP - Design, Construction, etc. For Grants can be used as reimbursable types, such as transportation, salaries.

(You can create more than one phase and you can default MUNIS ORGs and OBJs, optional)

Phase: WIP Design MUNIS ORG: 5000375 MUNIS OBJ: 572960

Grants Only (list all grants if applicable):

Grantor Name: New Mexico Environment Department 25J2459 Awarded Amount: 100,000

AR Charge Code: 5000375.490190 ☐ Grant funds multiple projects (Complete a form for each project)

Grantor Id: 700004 Federal CFDA (if applicable): N/A

Grantor Name: _____ Awarded Amount: _____

AR Charge Code: _____ ☐ Grant funds multiple projects (Complete a form for each project)

Grantor Id: _____ Federal CFDA (if applicable): _____

(If grants please provide all grant award documents with form) ☐ Attached Grant Documentation

Log # *{Finance use only}*:	
Journal # *{Finance use only}*:	

City of Santa Fe, New Mexico
BUDGET AMENDMENT RESOLUTION (BAR)

DEPARTMENT / DIVISION NAME	DATE
Public Utilities/Wastewater Division	11/19/2025

ITEM DESCRIPTION	ORG	OBJECT	PROJECT	INCREASE	DECREASE
EXPENDITURES				*{enter as positive #}*	*{enter as negative #}*
Planning - Paseo Real Waterwater Treatment Facility	5000375	572960	CIP2455001	99,000	
REVENUES				*{enter as negative #}*	*{enter as positive #}*
NMED SAP 25-J2459-GF - Paseo Real Wastewater Treatment Facility	5000375	490190	CIP2455001	(99,000)	
				$ -	$ -

JUSTIFICATION: *(use additional page if needed)*
--Attach supporting documentation/memo

NMED Grant Award SAP 25-J2459-GF for Paseo Real Wastewater Treatment Facility in the total amount of $99,000

Reversion date 6/30/2029

{Complete section below if BAR results in a net change to ANY Fund}

Fund(s) Affected	Fund Balance Increase/(Decrease)
TOTAL:	0

Carol Swenson 11/19/2025
Prepared By *{print name}* Date

Carol Swenson
Business Operations Manager Signature Date

Department Director Signature Date

{Use this form for Finance Committee/ City Council agenda items ONLY}

CITY COUNCIL APPROVAL

City Council Approval Date

Agenda Item #:

Andy Hopkins
Budget Officer Date

Finance Director *{≤ $5,000}* Date

BRIAN MOYA Jan 12, 2026
City Manager *{≤ $60,000}* Date

GB Packet Paseo Real SAP 25-J2459 WWT

Final Audit Report 2025-12-03

Created:	2025-12-02
By:	Troy Bernal (tdbernal@santafenm.gov)
Status:	Signed
Transaction ID:	CBJCHBCAABAAOi2wIiV7IszASIPohGfXQaoD4fqfe7w_

"GB Packet Paseo Real SAP 25-J2459 WWT" History

Document created by Troy Bernal (tdbernal@santafenm.gov)
2025-12-02 - 7:19:13 PM GMT- IP address: 63.232.20.2

Document emailed to YVONNE SWENSON (ycswenson@santafenm.gov) for signature
2025-12-02 - 7:24:52 PM GMT

Email viewed by YVONNE SWENSON (ycswenson@santafenm.gov)
2025-12-02 - 8:35:46 PM GMT- IP address: 63.232.20.2

Document e-signed by YVONNE SWENSON (ycswenson@santafenm.gov)
Signature Date: 2025-12-02 - 8:36:22 PM GMT - Time Source: server- IP address: 63.232.20.2

Document emailed to tslot@santafenm.gov for signature
2025-12-02 - 8:36:24 PM GMT

Email viewed by tslot@santafenm.gov
2025-12-03 - 0:26:02 AM GMT- IP address: 104.47.64.254

Signer tslot@santafenm.gov entered name at signing as Talal Saint-Lôt
2025-12-03 - 0:26:26 AM GMT- IP address: 168.93.61.242

Document e-signed by Talal Saint-Lôt (tslot@santafenm.gov)
Signature Date: 2025-12-03 - 0:26:28 AM GMT - Time Source: server- IP address: 168.93.61.242

Document emailed to Jesse Roach (jdroach@santafenm.gov) for signature
2025-12-03 - 0:26:30 AM GMT

Email viewed by Jesse Roach (jdroach@santafenm.gov)
2025-12-03 - 4:31:10 PM GMT- IP address: 104.47.65.254

Document e-signed by Jesse Roach (jdroach@santafenm.gov)
Signature Date: 2025-12-03 - 4:37:28 PM GMT - Time Source: server- IP address: 63.232.20.2

Powered by Adobe Acrobat Sign

Document emailed to ajhopkins@santafenm.gov ajhopkins@santafenm.gov (ajhopkins@santafenm.gov) for signature

2025-12-03 - 4:37:30 PM GMT

Email viewed by ajhopkins@santafenm.gov ajhopkins@santafenm.gov (ajhopkins@santafenm.gov)

2025-12-03 - 4:42:40 PM GMT- IP address: 104.47.65.254

Document e-signed by ajhopkins@santafenm.gov ajhopkins@santafenm.gov (ajhopkins@santafenm.gov)

Signature Date: 2025-12-03 - 4:43:19 PM GMT - Time Source: server- IP address: 63.232.20.2

Agreement completed.

2025-12-03 - 4:43:19 PM GMT

CITY OF SANTA FE

Date: December 18, 2025

To: Governing Body

From: Gabrielle Chavez, Transit Director of Administration GC

Via: Sam Burnett, Interim Public Works Department Director Sam Burnett

Subject: Amendment No. 1 to a Memorandum of Agreement with NMDOT

ACTION:
Request for Approval of Amendment No. 1 to a Memorandum of Agreement with the New Mexico Department of Transportation (NMDOT) for Public Transportation Operating Assistance in the Total Amount of $20,000 with a Reversion Date of March 31, 2027. (Gabrielle Chavez, Transit Director of Administration: gnchavez@santafenm.gov)

Request for Approval of a Budget Amendment Resolution (BAR) in the Total Amount of $40,000 with $20,000 from the Memorandum of Agreement Amendment No. 1 and $20,000 Matching Funds from the ¼% Gross Receipts Tax Revenue (GRT) for Transit to FY25 Transit Grant Revenue and Professional Contracts.

BACKGROUND AND SUMMARY:
The city was awarded additional FTA operating funds, identified as FY25 Section 5310 Enhanced Mobility of Seniors and Individuals with Disabilities Funding by the NMDOT Transit and Rail Division. The purpose of the additional funds for operating on-demand service, and salaries and fringe benefits for the City of Santa Fe's Transit operations supervisors, drivers, mechanics, dispatch and operations support. There is a 50 percent Local match requirement of funds. which will be provided by the City of Santa Fe through the ¼% gross receipts tax dedicated to Transit.

FUNDING SOURCE: US DOT FTA Section 5310 (NMDOT-2024-008 and NMDOT 2019-001) FY 2025 Award and Transit Fund Balance
Munis Project Ledger ID: PWD2554039
Munis Fund Name/Number: Transit/540
Munis Org Name/Number: Transit Operations/5400491
Munis Revenue Obj Name/Number: NM DOT/490150
Munis Expenditure Obj Name/Number: Professional Contracts/510310

ATTACHMENTS:
Memo
MOA Amendment with NMDOT
Project Ledger Request
BAR

Docusign Envelope ID: F89B259F-C2EC-43F5-9AC3-695DDDD1D42E

CONTRACT NO: M01986/1
VENDOR NO: 54360

FISCAL YEAR 2025 (FY25)

FIRST AMENDMENT TO MEMORANDUM OF AGREEMENT

BETWEEN

THE NEW MEXICO DEPARTMENT OF TRANSPORTATION

AND

CITY OF SANTA FE

This First Amendment is to the Memorandum of Agreement between the **STATE OF NEW MEXICO**, acting through its **DEPARTMENT OF TRANSPORTATION** (Department) and the **CITY OF SANTA FE** (Subrecipient). This first amendment is effective as of the date of the last party to sign it on the signature page below.

Recitals

Whereas, the Department and the Subrecipient entered into a Memorandum of Agreement designated as Contract No. **M01986,** on **July 3, 2025**;

Whereas, Section 50 allows the parties to alter the Agreement by written consent of both parties hereto;

Whereas, the subrecipient has been awarded $20,000.00 in additional federal funds for operating assistance;

Now, therefore, pursuant to NMSA 1978; Section 67-3-69, the parties agree as follows:

A. Replace Section 2. Cost of Program of the original Agreement with the following:

2. Cost of Program.

The Department shall provide partial funding to the Subrecipient to cover expenses of the Program as described in the approved Operations Profile in an amount described below:

Docusign Envelope ID: F89B259F-C2EC-43F5-9AC3-695DDDD1D42E

Subaward FY 25

City of Santa Fe	Total	Federal	Local
Capital to Subrecipient (80/20)) Section 5310 Equipment	$104,202.30	$ 83,361.84	$ 20,840.46
Capital to Subrecipient (80/20)) Section 5310 Vehicles	$563,870.00	$ 451,096.00	$ 112,774.00
Operating Assistance (50/50) Section 5310	$ 40,000.00	$ 20,000.00	**$ 20,000.00**
Total Capital	**$708,072.30**	**$ 554,457.84**	**$ 153,614.46**

Vehicle acquisition funds that designate payment as capital to vendor that are not obligated by contract by May 31, 2025, may revert to the Department.

Vehicle acquisition funds that designate payment as capital to subrecipient that are not obligated by contract by September 30, 2026, may revert to the Department.

Capital equipment acquisition funds that are not obligated by contract by September 30, 2027, may revert to the Department.

Capital rehab/renovation and construction project funds that are not obligated by contract by September 30, 2028, may revert to the Department.

This program is funded with grants provided by the FTA Section 5305 Statewide Transportation Planning Formula Program, Assistance Listing number 20.505; FTA Section 5307 Urbanized Area Formula Program, Assistance Listing number 20.507; FTA Section 5310 Enhanced Mobility of Seniors and Individuals with Disabilities Program, Assistance Listing number 20.513; FTA Section 5311 Formula Grants for Rural Areas, Assistance Listing number 20.509; and FTA Section 5339 Bus and Bus Facilities Formula and Discretionary Program, Assistance Listing number 20.526. (**Attachment A**.) The Department's share of Program expenses shall be obtained from the federal government. State funds will not be earmarked or disbursed to fund the Program. The Department shall not be responsible for any other costs incurred by the Subrecipient. The Subrecipient shall take all actions necessary to fund its share of the Program.

B. Revise Attachment A-1 and A-2 to the original agreement as attached to this amendment.

C. Replace Section 6. Term of the original Agreement with the following:

6. Term.

Upon the signature of all parties, this Agreement becomes effective with a starting date of October 1, 2024.

Costs incurred under this agreement for Administration and Operating expenses from October 1, 2024, to September 30, 2025, are eligible for reimbursement.

Vehicle acquisition funds that designate payment as capital to vendor that are obligated by contract by May 31, 2025, are eligible for reimbursement.

Docusign Envelope ID: F89B259F-C2EC-43F5-9AC3-695DDDD1D42E

In witness whereof, each party is signing this Agreement on the date stated below that party's signature. This Agreement becomes effective on the date the last party signed the Agreement.

New Mexico Department of Transportation

NMDOT Cabinet Secretary or Designate

Date

CITY OF SANTA FE

Alan Webber, Mayor

Name/Title (please print)

Date

Approved as to Form and Legal Sufficiency by the Department's Office of General Counsel.

Signed by:
Samuel Roybal
57B9FC4FE09B464...

NMDOT Assistant General Counsel

10/20/25

Date

CITY OF SANTA FE ATTORNEY'S OFFICE:

Kevin L. Nault
Kevin L. Nault (Nov 12, 2025 10:03:59 MST)

City of Santa Fe Assistant Attorney

Nov 12, 2025

Date

CITY OF SANTA FE ATTEST:

City of Santa Fe City Clerk

Date

Docusign Envelope ID: F89B259F-C2EC-43F5-9AC3-695DDDD1D42E

Vehicle acquisition funds that designate payment as capital to subrecipient that are obligated by contract by September 30, 2026, are eligible for reimbursement.

Capital equipment acquisition funds obligated by contract by September 30, 2027, are eligible for reimbursement.

Capital rehab/renovation and construction project funds obligated by contract by September 30, 2028, are eligible for reimbursement.

All other obligations set forth in the original Agreement shall remain in full force and effect unless expressly amended or modified by this **First Amendment**.

Docusign Envelope ID: F89B259F-C2EC-43F5-9AC3-695DDDD1D42E

ATTACHMENT A

§200.331 Requirements for pass-through entities.

All pass-through entities must:

Ensure that every subaward is clearly identified to the subrecipient as a subaward and includes the following information at the time of the subaward and if any of these data elements change, include the changes in subsequent subaward modification. When some of this information is not available, the pass-through entity must provide the best information available to describe the Federal award and subaward.

Docusign Envelope ID: F89B259F-C2EC-43F5-9AC3-695DDDD1D42E

ATTACHMENT A-1 Revised

§200.331 Requirements for pass-through entities.

All pass-through entities must:

Ensure that every subaward is clearly identified to the subrecipient as a subaward and includes the following information at the time of the subaward and if any of these data elements change, include the changes in subsequent subaward modification. When some of this information is not available, the pass-through entity must provide the best information available to describe the Federal award and subaward. Required information includes:

Federal Award Identification.

(i) Subrecipient name (which must match the name associated with its unique entity identifier);	**City of Santa Fe**
(ii) Subrecipient's unique entity ID;	**QLN2YKMMJ8X6**
(iii) Federal Award Identification Number (FAIN);	**NM-2024-008**
(iv) Federal Award Date (see §200.39 Federal award date) of award to the recipient by the Federal agency;	**4/28/2022**
(v) Subaward Period of Performance Start and End Date;	**10-01-2024 thru 03-31-2027**
(vi) Amount of Federal Funds Obligated by this action by the pass-through entity to the subrecipient;	**Capital $471,096.00**
(vii) Total Amount of Federal Funds Obligated to the subrecipient by the pass-through entity including the current obligation;	**Capital $471,096.00**
(viii) Total Amount of the Federal Award committed to the subrecipient by the pass-through entity;	**Capital $471,096.00**
(ix) Federal award project description, as required to be responsive to the Federal Funding Accountability and Transparency Act (FFATA);	**FY22 5310 Enhanced Mobility of Seniors and Individuals with Disabilities for FY25 Program Funding Award**
(x) Name of Federal awarding agency, pass-through entity, and contact information for awarding official of the Pass-through entity;	**Federal Transit Administration, New Mexico Department of Transportation** **David Harris - 505 -827-5420, DavidC.Harris@dot.nm.gov** **P.O. Box 1149 Santa Fe, NM 87501-1149**
(xi) CFDA Number and Name; the pass-through entity must identify the dollar amount made available under each Federal award and the CFDA number at time of disbursement;	**20.513**
(xii) Identification of whether the award is R&D; and	**No R&D**
(xiii) Indirect cost rate for the Federal award (including if the de minimis rate is charged per §200.414 Indirect (F&A) costs).	**N/A**

Docusign Envelope ID: F89B259F-C2EC-43F5-9AC3-695DDDD1D42E

ATTACHMENT A-2 Revised

§200.331 Requirements for pass-through entities.

All pass-through entities must:

Ensure that every subaward is clearly identified to the subrecipient as a subaward and includes the following information at the time of the subaward and if any of these data elements change, include the changes in subsequent subaward modification. When some of this information is not available, the pass-through entity must provide the best information available to describe the Federal award and subaward. Required information includes:

Federal Award Identification.

(i) Subrecipient name (which must match the name associated with its unique entity identifier);	**City of Santa Fe**
(ii) Subrecipient's unique entity ID;	**QLN2YKMMJ8X6**
(iii) Federal Award Identification Number (FAIN);	**NM-2019-001**
(iv) Federal Award Date (see §200.39 Federal award date) of award to the recipient by the Federal agency;	**7/16/2018**
(v) Subaward Period of Performance Start and End Date;	**10-01-2024 thru 03-31-2027**
(vi) Amount of Federal Funds Obligated by this action by the pass-through entity to the subrecipient;	**Capital $83,361.84**
(vii) Total Amount of Federal Funds Obligated to the subrecipient by the pass-through entity including the current obligation;	**Capital $83,361.84**
(viii) Total Amount of the Federal Award committed to the subrecipient by the pass-through entity;	**Capital $83,361.84**
(ix) Federal award project description, as required to be responsive to the Federal Funding Accountability and Transparency Act (FFATA);	**FY18 5310 Enhanced Mobility of Seniors and Individuals with Disabilities for FY25 Program Funding Award**
(x) Name of Federal awarding agency, pass-through entity, and contact information for awarding official of the Pass-through entity;	**Federal Transit Administration, New Mexico Department of Transportation** **David Harris - 505 -827-5420, DavidC.Harris@dot.nm.gov** **P.O. Box 1149 Santa Fe, NM 87501-1149**
(xi) CFDA Number and Name; the pass-through entity must identify the dollar amount made available under each Federal award and the CFDA number at time of disbursement;	**20.513**
(xii) Identification of whether the award is R&D; and	**No R&D**
(xiii) Indirect cost rate for the Federal award (including if the de minimis rate is charged per §200.414 Indirect (F&A) costs).	**N/A**

City of Santa Fe New Mexico

Finance Department

Project Ledger Request Form

Date of Request: 11/20/2025 Revision

Project Title: Section 5310 Operating Assistance

Project Type: ☐ CIP ☑ Grant ☑ Internal Tracking

Project ID: PWD2554039

Grant ID: S2567/S2537A1

Approved By: ERIKA LUJAN (Nov 21, 2025 08:28:14 MST)

CT (Finance Use Only)

Department: PW-Transit Project Manager: Gabrielle Chavez Ext: 2055

Project Date Range: 10/1/2024 to 3/31/2027 ☐ Create Fixed Asset

---

☑ Multi-Funding (complete all funding sources, should equal 100%)

Funding Source: FTA NM-2024-008 P/T NMDOT % of Funding: 50

MUNIS ORG: 5400491 MUNIS OBJ: 490150 Awarded Amount: $20,000

Funding Source: LOCAL MATCH % of Funding: 50

MUNIS ORG: 5400491 MUNIS OBJ: Awarded Amount: $20000.00

Expense String Phase:

A project must have at least one phase identified, this can be used as an additional level of tracking, for example, CIP - Design, Construction, etc. For Grants can be used as reimbursable types, such as transportation, salaries.

(You can create more than one phase and you can default MUNIS ORGs and OBJs, optional)

Phase: Various Transit Operating MUNIS ORG: 5400491 MUNIS OBJ: ~~500110~~ 510310

Grants Only (list all grants if applicable): 11/21/25 PROJECT TOTAL: 820846.30

Grantor Name: NMDOT MOA 1986-1 FHWA P/T NM-2024-008 Awarded Amount: $20,000

AR Charge Code: 5400491.490150 ☐ Grant funds multiple projects (Complete a form for each project)

Grantor Id: 700000 Federal CFDA (if applicable): 20.513

Grantor Name: Awarded Amount:

AR Charge Code: ☐ Grant funds multiple projects (Complete a form for each project)

Grantor Id: Federal CFDA (if applicable):

(If grants please provide all grant award documents with form) ☑ Attached Grant Documentation

City of Santa Fe New Mexico

Finance Department

Project Ledger Request Form

Date of Request: 10/7/24-REVISED 5/15/25 PAGE 2 OF 2

Project Title: SEC5310 PARATRANSIT VANS VIA NMDOT

Project Type: ☐ CIP ☑ Grant ☑ Internal Tracking

Project ID: PWD2554039

Grant ID: S2537/S2567

Approved By: ERIKA LUJAN (May 20, 2025 13:57 MDT)

CT (Finance Use Only)

Department: PW-TRANSIT Project Manager: GABRIELLE CHAVEZ Ext: 2055

Project Date Range: 10/15/24 to 3/31/26 ☑ Create Fixed Asset

☑ Multi-Funding (complete all funding sources, should equal 100%)

Funding Source: FTA-2024-008 P/T NMDOT % of Funding: 80/20 LOCAL MATCH: 112774.00

MUNIS ORG: 5400499 MUNIS OBJ: 490150 Awarded Amount: 451096.00

Funding Source: NM2019-001 % of Funding: 80/20 LOCAL MATCH : 20840.46

MUNIS ORG: 5400499 MUNIS OBJ: 490150 Awarded Amount: 83361.84

Expense String Phase:

A project must have at least one phase identified, this can be used as an additional level of tracking, for example, CIP - Design, Construction, etc. For Grants can be used as reimbursable types, such as transportation, salaries.

(You can create more than one phase and you can default MUNIS ORGs and OBJs, optional)

Phase: VEHICLES,DATA PRC INV EXPT MUNIS ORG: 5400499 MUNIS OBJ: 570950,570800

Grants Only (list all grants if applicable): PROJECT TOTAL: 668072.30

Grantor Name: NMDOT P/THRU 2024-008 Awarded Amount: 451096.00

AR Charge Code: 5400499.490150 ☐ Grant funds multiple projects (Complete a form for each project)

Grantor Id: 700000 Federal CFDA (if applicable): 20.513

Grantor Name: NMDOT P/THRU 2019-001 Awarded Amount: 83361.84

AR Charge Code: 5400499.490150 ☐ Grant funds multiple projects (Complete a form for each project)

Grantor Id: 700000 Federal CFDA (if applicable): 20.513

(If grants please provide all grant award documents with form) ☑ Attached Grant Documentation

Log # *{Finance use only}* :	
Journal # *{Finance use only}* :	

City of Santa Fe, New Mexico
BUDGET AMENDMENT RESOLUTION (BAR)

DEPARTMENT / DIVISION NAME	DATE
Public Works Department/Transit	11/20/2025

ITEM DESCRIPTION	ORG	OBJECT	PROJECT	INCREASE	DECREASE
EXPENDITURES				*{enter as positive #}*	*{enter as negative #}*
Professional Contracts	5400491	510310	PWD2554039	40,000	
REVENUES				*{enter as negative #}*	*{enter as positive #}*
USDOT-NMDOT NM-2024-008 Section 5310 Operating Assistance	5400491	490150		(20,000)	
				$ 20,000	$ -

JUSTIFICATION: *(use additional page if needed)*
--Attach supporting documentation/memo

First Amendment to NMDOT NM-2024-008 to award an additional $20,000 to Transit Division for Operating Assistance with a local match of $20,000 from the ¼% GRT Fund for Transit for a total of $40,000. (Reversion 3/31/2027)

{Complete section below if BAR results in a net change to ANY Fund}

Fund(s) Affected	Fund Balance Increase/(Decrease)
TOTAL:	**0**

{Use this form for Finance Committee/ City Council agenda items ONLY}

CITY COUNCIL APPROVAL

City Council Approval Dat

Agenda Item #:

Carol Swenson 11/20/2025
Prepared By *{print name}* Date

Gabrielle Chavez (D[illegible]8, 2025 16:25:53 MST)
Division Director Signature *{optional}* Date

Department Director Signature Date

Andy Hopkins
Budget Officer Date

Finance Director *{≤ $5,000}* Date

Mark Scott (Dec 19, 2025 11:32:05 PST)
City Manager *{≤ $60,000}* Date

CITY OF SANTA FE

Date: January 7, 2026

To: Governing Body
Finance Committee
Quality of Life Committee

Via: Thomas Grundler, Interim Chief of Police THOMAS GRUNDLER (Jan 7, 2026 14:47:53 MST)

From: **Patrick Trujillo, Captain** Patrick Trujillo

Subject: **ENDWI Grant Agreement/BAR**

Vendor Name: **New Mexico Department of Transportation**

Vendor Number: **7177**

ITEM AND ISSUE:
Request for approval of a Grant Agreement with the New Mexico Department of Transportation to Fund the End Driving While Impaired (ENDWI) Project, Buckle Up (BKLUP)/Click it or Ticket (CIOT) Project, Distracted Driving (DD) Project, and Selective Traffic Enforcement Program (STEP)/Summer Enforcement Period Project in the Total Amount of $87,349 through September 30, 2026. (Patrick Trujillo, Police Captain: pjtrujillo@santafenm.gov)

1. Request for Approval of a Budget Adjustment Resolution in the Total Amount of $87,349 from the NM Department of Transportation Fund – State Grants to the Police Overtime Fund.

Action Requested: **Approval of Agreement and BAR**

BACKGROUND AND SUMMARY:
The attached project award to the City of Santa Fe Police Department is from the New Mexico Department of Transportation and does not require matching funds from the City of Santa Fe. The project funds reimburse the City of Santa Fe Police Department for eligible expenses required to conduct projects aimed at reducing traffic-related injuries and deaths. End Driving While Impaired (ENDWI) Project # 06-AL-64-090 for $43,312 will allow officers to conduct sobriety checkpoints and DWI directed enforcement patrols in high crash locations identified in data compiled by local, state, or federal government agencies and included in the City's Operational Plan. Buckle Up (BKLUP)/Click it or Ticket (CIOT) Project # 06-OP-05b-090 for $9,198 is to conduct occupant protection directed enforcement patrols in high crash locations. Selective Traffic Enforcement Program (STEP) Project # 06-PT-02-090 for $30,303 is to conduct directed enforcement patrols in high crash locations identified in data compiled by local, state, or federal government agencies and the City's Operational Plan. Distracted Driving Project # 06-DD-05e-090 for $4,536 provides funding for high visibility enforcement campaigns to reduce distracted driving

PROCUREMENT METHOD: N/A
Chief Procurement Officer Approval: N/A **Date:**

Comment/Exceptions: _____
Supporting Information:
CONTRACT NUMBER: N/A

$$$$$ SOURCE/REVENUE: ☐**Expense |** ☒**Revenue**
Reimbursement of overtime.

Budget Officer Approval: Andy Hopkins **Date:** Jan 8, 2026
Comment/Exceptions: _____

Grant ☒**Yes |** ☐ **No**
Grant #: S2633 (Year1), S2629 (Year2), S2629(Year2), S2630 (Year2)
Grant Manager/Accounting Officer Approval: Matthew Bonifer Matthew Bonifer (Jan 7, 2026 15:01:22 MST) **Date:** Jan 7, 2026
Comment/Exceptions: _____

Project ☒**Yes |** ☐ **No**
Project Ledger #: POL2622303, POL2422306, POL2422307, POL2422308

CAPITAL ASSET (will this procurement result in a tangible item that costs more than $5,000
☐**Yes |** ☒ **No**
Asset # (if known): N/A

Repair or Replacement of Existing Equipment:
☐**Yes |** ☒ **No ~If yes ->** ☐**Repair |** ☐ **Replacement**
Please explain: N/A

Capital Project:
(New and improvement projects that are going to cost $10,000 or more)
☐ **Yes |** ☒ **No**
Anticipated length of project: N/A
Asset Manager Approval: N/A **Date:** _____
Comment/Exceptions: _____

Was this service deemed construction: ☐ **Yes |** ☒ **No**
Department Approvals:
IT Components: ☐ **Yes |** ☒ **No**
Vehicles: ☐ **Yes |** ☒ **No**
Facilities, Furniture, Fixtures, Equipment: ☐ **Yes |** ☒ **No**
Approval: N/A **Title:** _____ **Date:** _____
Approval: _____ **Title:** _____ **Date:** _____
Comment & Exceptions: _____

Department Contract Administrator Contact Info: Anna Marie Bowen, 505-955-5122

ATTACHMENTS:
Agreement
Project Ledger Forms
Budget Amendment Resolution (BAR)

Log # *{Finance use only}*:	
Journal # *{Finance use only}*:	

City of Santa Fe, New Mexico
BUDGET AMENDMENT RESOLUTION (BAR)

DEPARTMENT / DIVISION NAME	DATE
Police/Administration	1/7/2026

ITEM DESCRIPTION	ORG	OBJECT	PROJECT	INCREASE	DECREASE
EXPENDITURES				*{enter as positive #}*	*{enter as negative #}*
Overtime	2230315	501400	POL2422306	43,312	
Overtime	2230315	501400	POL2422307	9,198	
Overtime	2230315	501400	POL2422308	30,303	
Overtime	2230315	501400	POL2622303	4,536	
REVENUES				*{enter as negative #}*	*{enter as positive #}*
NM Dept of Transportation	2230315	490150	POL2422306	(43,312)	
	2230315	490150	POL2422307	(9,198)	
	2230315	490150	POL2422308	(30,303)	
	2230315	490150	POL2622303	(4,536)	
				$ -	$ -

JUSTIFICATION: *(use additional page if needed)*
--Attach supporting documentation/memo

To record NM Department of Transportation traffic projects; ENDWI $43,312; BKLUP/CIOT $9,198; and STEP $30,303,

Distracted Driving (DD) $4,536. For a total of $87,349.

{Complete section below if BAR results in a net change to ANY Fund}	
Fund(s) Affected	Fund Balance Increase/(Decrease)
TOTAL:	0

AnnaMarie Bowen 1/7/2026
Prepared By *{print name}* Date

Division Director Signature *(optional)* Date

1-7-26
Department Director Signature Date

{Use this form for Finance Committee/ City Council agenda items ONLY}

CITY COUNCIL APPROVAL

City Council Approval Date

Agenda Item #:

Andy Hopkins Jan 8, 2026
Budget Officer Date

Finance Director *{≤ $5,000}* Date

City Manager *{≤ $60,000}* Date

City of Santa Fe New Mexico

Finance Department

Project Ledger Request Form

Date of Request: 10/31/2025

Project Title: Traffic Enforcement Program (DD) Prj# 06-DD-05e-090

Project Type: ☐ CIP ☑ Grant ☑ Internal Tracking

Project ID: POL2622303
Grant ID: S2633-(YEAR 1)
Approved By: BSG 11.07.25/ Erika lujan
(Finance Use Only)

Department: SFPD Project Manager: AnnaMarie Bowen Ext: 5122

Project Date Range: Upon signature to 09/30/2026 ☐ Create Fixed Asset

---

☐ Multi-Funding (complete all funding sources, should equal 100%)

Funding Source: NMDOT Grant Agree/State Rd Fund % of Funding: 100

MUNIS ORG: 2230315 MUNIS OBJ: 490150 Awarded Amount: $4,536.00

Funding Source: _____ % of Funding: _____

MUNIS ORG: _____ MUNIS OBJ: _____ Awarded Amount: _____

Expense String Phase:

A project must have at least one phase identified, this can be used as an additional level of tracking, for example, CIP - Design, Construction, etc. For Grants can be used as reimbursable types, such as transportation, salaries.

(You can create more than one phase and you can default MUNIS ORGs and OBJs, optional)

Phase: Police OT MUNIS ORG: 2230315 MUNIS OBJ: 501400

Grants Only (list all grants if applicable):

Grantor Name: NMDOT Grant Agreement - State Road Fund Awarded Amount: $4,536.00

AR Charge Code: 2230315.490150 ☑ Grant funds multiple projects (Complete a form for each project)

Grantor Id: 06-DD-05e-090 (Distracted Driving) Federal CFDA (if applicable): 20.616

Grantor Name: _____ Awarded Amount: _____

AR Charge Code: _____ ☐ Grant funds multiple projects (Complete a form for each project)

Grantor Id: _____ Federal CFDA (if applicable): _____

(If grants please provide all grant award documents with form) ☑ Attached Grant Documentation

City of Santa Fe New Mexico

Finance Department

Project Ledger Request Form

Date of Request: 10/31/2025

Project Title: Traffic Enforcement Program (ENDWI) Prj# 06-AL-64-090

Project Type: ☐ CIP ☑ Grant ☑ Internal Tracking

Project ID: POL2422306
Grant ID: S2629-(YEAR 2)
Approved By: BSG 11.07.25/ Erika Lujan
(Finance Use Only)

Department: SFPD Project Manager: AnnaMarie Bowen Ext: 5122

Project Date Range: Upon signature to 09/30/2026 ☐ Create Fixed Asset

---

☐ Multi-Funding (complete all funding sources, should equal 100%)

Funding Source: NMDOT Grant Agree/State Rd Fund % of Funding: 100

MUNIS ORG: 2230315 MUNIS OBJ: 490150 Awarded Amount: $43,312.00

Funding Source: _____ % of Funding: _____

MUNIS ORG: _____ MUNIS OBJ: _____ Awarded Amount: _____

Expense String Phase:

A project must have at least one phase identified, this can be used as an additional level of tracking, for example, CIP - Design, Construction, etc. For Grants can be used as reimbursable types, such as transportation, salaries.

(You can create more than one phase and you can default MUNIS ORGs and OBJs, optional)

Phase: Police OT MUNIS ORG: 2230315 MUNIS OBJ: 501400

Grants Only (list all grants if applicable):

Grantor Name: NMDOT Grant Agreement - State Road Fund Awarded Amount: $43,312.00

AR Charge Code: 2230315.490150 ☑ Grant funds multiple projects (Complete a form for each project)

Grantor Id: 06-AL-64-090 (ENDWI) Federal CFDA (if applicable): 20.608

Grantor Name: _____ Awarded Amount: _____

AR Charge Code: _____ ☐ Grant funds multiple projects (Complete a form for each project)

Grantor Id: _____ Federal CFDA (if applicable): _____

(If grants please provide all grant award documents with form) ☑ Attached Grant Documentation

City of Santa Fe New Mexico

Finance Department

Project Ledger Request Form

Date of Request: 10/31/2025

Project Title: Traffic Enforcement Program (BKLUP) Prj# 06-OP-05b-090

Project Type: ☐ CIP ☑ Grant ☑ Internal Tracking

Project ID: POL2422307
Grant ID: S2632-(YEAR2)
Approved By: BSG 11.13.25/ Erika Lujan
(Finance Use Only)

Department: SFPD Project Manager: AnnaMarie Bowen Ext: 5122

Project Date Range: Upon signature to 09/30/2026 ☐ Create Fixed Asset

---

☐ Multi-Funding (complete all funding sources, should equal 100%)

Funding Source: NMDOT Grant Agree/State Rd Fund % of Funding: 100

MUNIS ORG: 2230315 MUNIS OBJ: 490150 Awarded Amount: $9,198.00

Funding Source: _____ % of Funding: _____

MUNIS ORG: _____ MUNIS OBJ: _____ Awarded Amount: _____

Expense String Phase:

A project must have at least one phase identified, this can be used as an additional level of tracking, for example, CIP - Design, Construction, etc. For Grants can be used as reimbursable types, such as transportation, salaries.

(You can create more than one phase and you can default MUNIS ORGs and OBJs, optional)

Phase: Police OT MUNIS ORG: 2230315 MUNIS OBJ: 501400

Grants Only (list all grants if applicable):

Grantor Name: NMDOT Grant Agreement - State Road Fund Awarded Amount: $9,198.00

AR Charge Code: 2230315.490150 ☑ Grant funds multiple projects (Complete a form for each project)

Grantor Id: 06-OP-05b-090 (BKLUP) Federal CFDA (if applicable): 20.691

Grantor Name: _____ Awarded Amount: _____

AR Charge Code: _____ ☐ Grant funds multiple projects (Complete a form for each project)

Grantor Id: _____ Federal CFDA (if applicable): _____

(If grants please provide all grant award documents with form) ☑ Attached Grant Documentation

City of Santa Fe New Mexico

Finance Department

Project Ledger Request Form

Date of Request: 10/31/2025

Project Title: Traffic Enforcement Program (STEP) Prj# 06-PT-02-090

Project Type: ☐ CIP ☑ Grant ☑ Internal Tracking

Project ID: POL2422308
Grant ID: S2630-(YEAR 2)
Approved By: BSG 11.07.25/ Erika Lujan
(Finance Use Only)

Department: SFPD Project Manager: AnnaMarie Bowen Ext: 5122

Project Date Range: Upon signature to 09/30/2026 ☐ Create Fixed Asset

---

☐ Multi-Funding (complete all funding sources, should equal 100%)

Funding Source: NMDOT Grant Agree/State Rd Fund % of Funding: 100

MUNIS ORG: 2230315 MUNIS OBJ: 490150 Awarded Amount: $30,303.00

Funding Source: _____ % of Funding: _____

MUNIS ORG: _____ MUNIS OBJ: _____ Awarded Amount: _____

Expense String Phase:

A project must have at least one phase identified, this can be used as an additional level of tracking, for example, CIP - Design, Construction, etc. For Grants can be used as reimbursable types, such as transportation, salaries.

(You can create more than one phase and you can default MUNIS ORGs and OBJs, optional)

Phase: Police OT MUNIS ORG: 2230315 MUNIS OBJ: 501400

Grants Only (list all grants if applicable):

Grantor Name: NMDOT Grant Agreement - State Road Fund Awarded Amount: $30,303.00

AR Charge Code: 2230315.490150 ☑ Grant funds multiple projects (Complete a form for each project)

Grantor Id: 06-PT-02-090 (STEP) Federal CFDA (if applicable): 20.600

Grantor Name: _____ Awarded Amount: _____

AR Charge Code: _____ ☐ Grant funds multiple projects (Complete a form for each project)

Grantor Id: _____ Federal CFDA (if applicable): _____

(If grants please provide all grant award documents with form) ☑ Attached Grant Documentation

Docusign Envelope ID: 09670F0C-3B95-45CC-AB7D-BE541D0C437D

New Mexico DEPARTMENT OF TRANSPORTATION
MOBILITY FOR EVERYONE

MEMORANDUM

Date: September 29, 2025

To: Ricky Serna, Cabinet Secretary

Through: Shannon Glendenning, Director, Traffic Safety Division — DocuSigned by: Shannon Glendenning DE0D3FFF3B06491...

Through: Amber Sanchez, Staff Manager — Signed by: Amber Sanchez 96053378AB0A49E...

From: John Varags, Program Manager

Subject: Letter of Justification for Grant Agreement between the New Mexico Department of Transportation Traffic Safety Division and City of Santa Fe.

1. TSD Program Manager John Vargas Phone # 505-231-6784 will oversee the project(s).

2. The Consolidated Agreement provides funding to Santa Fe Police Department to conduct the following project(s) and activities as shown below.
   - ENDWI – $43,312.00(Fed 164)
     The ENDWI program funds overtime enforcement for Driving While Impaired (DWI) checkpoint and DWI directed patrol program. Funds are used to maintain the program, as funding allows, and to expand the program in areas of the State with high rates of DWI.
   - BKLUP -$9,198.00 (Feb 405b)
     The BKLUP program funds overtime for law enforcement agencies to conduct safety belt and child restraint/ booster seat use activities to increase in occupant protection use in New Mexico.
   - STEP – $30,303.00 (Fed 402)
     Provides funding for sustained enforcement program to target specific traffic problems such as speed, DWI, road rage, distracted and reckless driving, fatigue/ drowsy driving, occupant protection, and crashes involving pedestrians. Participating agencies include local law enforcement.
   - Distracted Driving – $4,536.00 (Fed 405e)
     Provides funding for high visibility enforcement campaigns to reduce distracted driving.
3. The agreement will be effective from date of last signature to 9/30/2026.

4. Scopes of work, including deliverables, are provided in the applicable exhibits attached to the agreement below.

5. The agreement is Exempt from the procurement as it is with another government agency, (per NMSA 1978 Section 13-1-98, et seq.)

Michelle Lujan Grisham
Governor

Ricky Serna
Cabinet Secretary

Commissioners

John McElroy
Commissioner
District 1

Gary Tonjes
Commissioner
District 2

Hilma E. Chynoweth
Commissioner. Vice Chairman
District 3

Walter G. Adams
Commissioner, Chairman
District 4

Thomas C. Taylor
Commissioner
District 5

Charles Lundstrom
Commissioner, Secretary
District 6

Docusign Envelope ID: 09670F0C-3B95-45CC-AB7D-BE541D0C437D

New Mexico DEPARTMENT OF TRANSPORTATION
MOBILITY FOR EVERYONE

October 3, 2025

Santa Fe police Department
Sergeant John Garcia
2515 Camino Entrada
Santa Fe, NM 87505

RE: Project Agreement

Dear Coordinator:

Enclosed is the project agreement for the federal fiscal year 2026. This letter contains information required to meet Federal Funding Accountability and Transparency Act (FFATA) and 2 CFR Part 200 requirements. Please provide a copy of this letter to the person responsible for meeting those requirements at your City, County, Town or Tribal agency. The following table contains the information necessary to meet these requirements.

Project Number	Funding Source	CFDA #	FAIN	Award Date	Amount
06-AL-64-090	IIJA 164 Transfer Funds	20.608	69A3752530000164ONMA	10/1/2025	$43,312.00
06-OP-05b-090	IIJA 405b OP Hign/Low	20.691	69A3752530000405BNMH	10/1/2025	$9,198.00
06-PT-02-090	IIJA NHTSA 402	20.600	69A7352530000402ONM0	10/1/2025	$ 30,303.00
06-DD-05e-090	IIJA 405e Distracted Driving Laws 24-26	20.616	69A3752530000405ENML	10/1/2025	$4,536.00

2 CFR Subpart F 200.500-521
(a) Audit required. A non-Federal entity that expends $1,000,000 or more during the non-Federal entity's fiscal year in Federal awards must have a single or program-specific audit conducted for that year in accordance with the provisions of this part.

(b) Single audit. A non-Federal entity that expends $1,000,000 or more during the non-Federal entity's fiscal year in Federal awards must have a single audit conducted in accordance with §200.514 Scope of audit except when it elects to have a program-specific audit conducted in accordance with paragraph (c) of this section.

(c) *Program-specific audit election.* When an auditee expends Federal awards under only one Federal program (excluding R&D) and the Federal program's statutes, regulations, or the terms and conditions of the Federal award do not require a financial statement audit of the auditee, the auditee may elect to have a program-specific audit conducted in accordance with §200.507 Program-specific audits. A program-specific audit may not be elected for R&D unless all of the Federal awards expended were received from the same Federal agency, or the same Federal agency and the same pass-through entity, and that Federal agency, or pass-through entity in the case of a subrecipient, approves in advance a program-specific audit.

Michelle Lujan Grisham
Governor

Ricky Serna
Cabinet Secretary

Commissioners

John McElroy
Commissioner
District 1

Gary Tonjes
Commissioner
District 2

Hilma E. Chynoweth
Commissioner, Vice Chairman
District 3

Walter G. Adams
Commissioner, Chairman
District 4

Thomas C. Taylor
Commissioner
District 5

Charles Lundstrom
Commissioner, Secretary
District 6

Docusign Envelope ID: 09670F0C-3B95-45CC-AB7D-BE541D0C437D

New Mexico DEPARTMENT OF TRANSPORTATION
MOBILITY FOR EVERYONE

(d) Exemption when Federal awards expended are less than $1,000,000. A non-Federal entity that expends less than $1,000,000 during the non-Federal entity's fiscal year in Federal awards is exempt from Federal audit requirements for that year, except as noted in §200.503.

Records must be available for review or audit by appropriate officials of the Federal agency, pass-through entity, and Government Accountability Office (GAO).

If expenditure are less than $1,000,000 during your agency's fiscal year 2025, please submit a statement to the Traffic Safety Division at the address listed on this letterhead. The Statement should read, "We did not meet the $1,000,000 expenditure threshold and therefore we are not required to have a single audit performed for FY 25."

Your agency must submit copies of audits and review reports associated with this grant agreement to the Department for informational purposes if requested regardless of whether the criteria for audit or review are met.

Operational Plan
Your agency is required to develop an operational plan to include a jurisdiction-specific performance goal, problem statement, problem identification, and basic crash data upon which the project is based. Performance goals should be specific, measurable, action-oriented, realistic, and time-bound.

Performance Indicators
The Department has implemented performance indicators on Department funded law enforcement projects. The performance indicators are as follows:
ENDWI Large (Population above 100,000)- 1 DWI in 28 hours
BKLUP 1 seat belt or child restraint citation for every 2 hours of enforcement worked.
STEP 2 citations or warnings for every hour of enforcement worked.

At no time does the New Mexico Department of Transportation require an individual officer to issue a specific number of citations during an enforcement period.

We look forward to working with you to prevent injuries and fatalities on New Mexico's roads. Thank you for your cooperation.

Sincerely,

DocuSigned by:
Shannon Glendenning
DE0D3FEF2B05491...

Shannon Glendenning, Director
Traffic Safety Division

Enclosure

Docusign Envelope ID: 09670F0C-3B95-45CC-AB7D-BE541D0C437D

CONTRACT NUMBER:_____
UNIQUE ENTITY IDENTIFIER: QLN2YKMMJ8X6
SUPPLIER: 0000054306

GRANT AGREEMENT

This Grant Agreement (**Agreement**) is between the New Mexico Department of Transportation (**Department**) and City of SantaFe (**Grantee**), collectively referred to as the "parties." This Agreement is effective as of the date of the last party to sign it on the signature page below. The Department and the Grantee agree as follows:

1. **Award.** The Department hereby awards the Grantee funding for the following projects:

   a. End Driving While Impaired (**ENDWI**), Project No. 06-AL-64-090, $43,312.00.
   b. Buckle Up (**BKLUP**)/Click It or Ticket (**CIOT**), Project No. 06-OP-04b-090, $9,198.00.
   c. Selective Traffic Enforcement Program (**STEP**), Project No. 06-PT-02-090, $30,303.00
   d. Distracted Driving (**DD**), Project No 06-DD-05e-090, $4,536.00.

   e. Total Funding awarded per this Agreement $87,349.00.

2. **Scope of Work.** The Grantee shall perform the professional services stated in the following exhibit(s): **Exhibit A** - ENDWI; **Exhibit B** - BKLUP/CIOT; **Exhibit C** – STEP, **Exhibit D** – Distracted Driving.

3. **Payment.** To be reimbursed for eligible expenses, the Grantee must submit timely and properly prepared reimbursement requests as provided in the Department's Electronic Grant Management System and the Traffic Safety Division Policies and Procedures Manual as directed by the Department. The Grantee acknowledges that the Department will not pay for any expenses incurred prior to the issuance of a Notice to Proceed (NTP) by the Department authorizing work, after termination of the Agreement, after Grantee receives a stop work notice from the Department, or in excess of the amount of the award noted in Section 1. The Grantee must submit its final reimbursement request no later than forty-five (45) calendar days after termination of this Agreement, unless otherwise approved by the Department.

4. **Records and Audit.** The Grantee shall strictly account for all receipts and disbursements related to this Agreement. The Grantee shall record costs incurred, services rendered, and payment received and shall maintain these financial records during the term of this Agreement and for three (3) years from the date of submission of the final reimbursement request pursuant to 2 CFR Section 200.334 and 1.21.2 NMAC. On request, the Grantee shall provide the financial records to the Department and the state auditor and shall allow the Department and the state auditor to inspect or audit these financial records during business hours at the Grantee's principal office during the term of this Agreement and for three (3) years from the date of submission of the final reimbursement request. If the financial records provided by the Grantee are insufficient to support an audit by customary accounting practices, the Grantee shall reimburse the Department for any expense incurred related to the insufficient documentation within thirty (30) calendar days of written notice from the Department. If an audit or inspection reveals that funds were used for expenses not directly related to the project or were used inappropriately, or that

payments were excessive or otherwise erroneous, the Grantee shall reimburse the Department for those funds or payments within thirty (30) calendar days of written notice

5. **Officials Not to Benefit.** The parties intend that no member of the New Mexico legislature or the United States Congress, or any public official, public employee or tribal council member, in that person's individual capacity, will benefit from this Agreement.

6. **Termination.** The Department may terminate this Agreement for any reason, by giving the Grantee thirty (30) calendar days written notice. On receipt of a "Notice of Cancellation," the Grantee shall suspend work unless otherwise directed by the Department in writing. The Grantee may only terminate this Agreement based on the Department's uncured, material breach of the Agreement and by giving the Department thirty (30) calendar days written notice. The parties acknowledge that termination will not nullify obligations incurred prior to termination and any obligations intended to survive termination of the Agreement, including but not limited to Section 4 and Section 11.

7. **Appropriations.** The Grantee acknowledges that:

   a. this Agreement is contingent upon sufficient appropriations and authorizations being made by the Congress of the United States or the New Mexico state legislature;
   b. if sufficient appropriations and authorizations are not made, this Agreement will terminate upon written notice by the Department to the Grantee; and
   c. the Department will not authorize the expenditure of funds by the Grantee until appropriate funds are encumbered, and the Department's determination as to whether approval has been granted will be final.

8. **Compliance with Law.** The Grantee, its employees, agents and contractors, shall comply with the following:

   a. Title VI and Title VII of the Civil Rights Act of 1964, the Age Discrimination in Employment Act of 1967, the Americans with Disabilities Act of 1990, the ADA Amendments Act of 2008, the Environmental Justice Act of 1994, the Civil Rights Restoration Act of 1987, and 49 C.F.R. Section 21;
   b. all applicable federal and state laws, rules, regulations, and executive orders pertaining to equal employment opportunity, including the Human Rights Act, NMSA 1978, Sections 28-1-1 through 28-1-15, and in accordance with such, the Grantee states that no person, on the grounds of race, religion, national origin, sex, sexual orientation, gender identity, spousal affiliation, serious medical condition, age, disability, or other protected class will be excluded from employment with or participation in, denied the benefits of, or otherwise subjected to, discrimination in any activity performed under this Agreement; if the Grantee is found to be in violation of any of these requirements, the Grantee shall take prompt and appropriate steps to correct such violation, subject to Section 6 above;
   c. state laws applicable to workers compensation benefits for the Grantee's employees, including the Workers' Compensation Act, NMSA 1978, Sections 52-1-1 through 52-1-70, and related rules;
   d. 2 C.F.R. 200, Subpart F - Audit Requirements, Sections 200.500 - 200.521; and
   e. those sections in Appendix A to Part 1300 labeled "applies to subrecipients as well as

states."

9. **Notices.** For a notice under this Agreement to be valid, it must be in writing; be delivered by hand, registered or certified mail postage prepaid, or email; and be addressed as follows:

to the Department at:
New Mexico Dept. of Transportation
Attn: Traffic Safety Division
P.O. Box 1149
Santa Fe, NM 87504-1149

to the Grantee at:
Santa Fe, City of
Attn: Sergeant John Garcia
2515 Camino Entrada
Santa Fe, NM 87505

10. **Severability.** The terms of this Agreement are lawful; performance of all duties and obligations shall conform with and do not contravene any state, local, or federal statute, regulation, rule, or ordinance. The parties intend that if any provision of this Agreement is held to be unenforceable, the rest of the Agreement will remain in effect as written.

11. **Liability.** Neither party shall be responsible for liability incurred as a result of the other party's acts or omissions in connection with this Agreement. Any liability incurred in connection with the Agreement is subject to the immunities and limitations of the New Mexico Tort Claims Act, NMSA 1978, Sections 41-4-1, *et seq.*, as amended, and any other applicable law. This section is intended only to define the liabilities between the parties and it is not intended to modify in any way, the parties' liabilities as governed by law.

12. **Project Responsibility.** The Grantee acknowledges that it bears sole responsibility for performing the services referred to in Section 2.

13. **Term.** This Agreement takes effect as of the date the last party to sign it on the signature page below. The grantee may not start work until directed to by the Department. The Agreement terminates on September 30, 2026, unless earlier terminated as provided in Section 6 or Section 7.

14. **Applicable Law.** The laws of the state of New Mexico, without giving effect to its choice of law provisions, govern all adversarial proceedings arising out of this Agreement.

15. **Jurisdiction and Venue.** The Grantee acknowledges the jurisdiction of the courts of the state of New Mexico for any adversarial proceeding arising out of this Agreement, and that venue for any such proceeding will be in the First Judicial District Court for the county of Santa Fe, New Mexico.

16. **No Third-party Beneficiary.** This Agreement does not confer any rights or remedies on anyone other than the parties.

17. **Scope of Agreement and Merger.** This Agreement incorporates all the agreements, covenants, and understanding between the parties concerning the subject matter of this Agreement. No prior agreements or understandings, verbal or otherwise, of the parties or their agents will be valid unless included in this Agreement.

18. **Disadvantaged Business Enterprise.** The following provision applies to a USDOT-assisted federally funded agreement only. The recipient shall not discriminate on the basis of race, color, national origin, sex, or other protected class in the award and performance of any USDOT-assisted contract or in the administration of its DBE program or the requirements of 49 CFR Part 26. The recipient shall take all necessary and reasonable steps under 49 CFR Part 26 to ensure nondiscrimination in the award and administration of USDOT-assisted contracts. The recipient's DBE program, as required by 49 CFR Part 26 and as approved by USDOT, is incorporated by reference in this Agreement. Implementation of this program is a legal obligation and failure to carry out its terms shall be treated as a violation of this Agreement. Upon notification to the recipient of its failure to carry out its approved program, the USDOT may impose sanctions as provided for under Part 26 and may, in appropriate cases, refer the matter for enforcement under 18 U.S.C. 1001 and/or the Program Fraud Civil Remedies Act of 1986 (31 U.S.C. 3801 *et seq.*).

19. **Amendment.** No amendment of this Agreement will be effective unless it is in writing and signed by the parties.

The remainder of this page is intentionally left blank.

Each party is signing this Agreement on the date stated opposite that party's signature. This Agreement is effective as of the date of the last party to sign it on the signature page below.

NEW MEXICO DEPARTMENT OF TRANSPORTATION

By: _____ Date: _____
Cabinet Secretary or Designee

CITY OF SANTA FE

By: _____ Date: _____

Title: _____

Approved as to form and legal sufficiency.

By: Signed by: Samuel Roybal 57B9FC4FE09B484... Date: 10/06/25
Assistant General Counsel
Department of Transportation

Approved as to form and legal sufficiency.

By: Christoher W. Ryan Christoher W. Ryan (Nov 7, 2025 10:25:[illegible] MST) Date: Nov 7, 2025
Counsel for City Of Santa Fe

ATTEST:

By: _____ Date: _____
City Clerk

Approved for Finances

By: _____ Date: _____
Finance Director

Exhibit A: Scope of Work, Training, Reimbursement and Reporting

END DRIVING WHILE IMPAIRED (ENDWI) Project Number: 06-AL-64-090

1. **Scope of Work.** The Grantee shall conduct sobriety checkpoints (SCs) and DWI directed enforcement patrols (DDEPs) in high crash locations, identified in data compiled by local, state, or federal government agencies, included in the Grantee's Operational Plan, and as negotiated between the Department and the Grantee. The Department encourages the Grantee to accompany SCs and DDEPs with public information, media, and educational activities. SCs must be scheduled to be staffed by at least five (5) officers as required by *City of Las Cruces v. Bentancourt, 1987-NMCA-039,* and must last a minimum of four (4) hours. The number of officers staffing an SC must meet the amount required by *Bentancourt* but not exceed the number detailed in the Grantee's Operational Plan. If the SC is not staffed with the minimum number of officers or was not conducted for the minimum number of hours, the Grantee must submit a justification with the invoice for these services. The Department may deny the invoice for SCs based on the justification. DDEPs must deploy officers in high crash locations consistent with the enforcement plan. If the DDEPs were conducted in areas not consistent with the enforcement plan, the Grantee must submit a justification with the invoice for these services. The Department may deny the invoice for DDEPs based on the justification. The Grantee is encouraged to schedule SCs and DDEPs throughout the grant period with a focus on participating during the Superblitz Period, 3 Mini Superblitz Periods, and National DWI Mobilizations as identified below.

2. **Definitions.** For purposes of this exhibit, the following definitions apply:

"Agency Coordinator" means the person assigned by the Grantee to assume direct responsibility for administering all phases of the Agreement.

"Directed Enforcement Patrols" means activities that enforce traffic laws in areas consistent with the agency's operational plan.

"Operational Plan" means a plan based on the most current crash data that identifies the problem to be addressed, goals to be achieved, and the performance measures to be employed. The Grantee may update its operational plan as needed to align with current trends.

Winter Superblitz Period -- November 15, 2025 to January 1, 2026.

St. Patrick's Day Mini Superblitz Period -- March 8 to March 17, 2026.

Spring Superblitz Period- "Put the phone away or pay" --April 6 to April 13, 2026

Cinco de Mayo May Mini Superblitz Period -- May 1 to May 7, 2026.

National Occupant Protection Mobilization Click It or Ticket period --May 11 to May 31, 2026.

Fourth of July Mini Superblitz Period -- July 1 to July 8, 2026.

National DWI Mobilization Period -- August 12 to September 7, 2026.

Summer enforcement period -- June 17, 2026 through September 19, 2026.

Winter Superblitz Period -- November 14, 2026 to January 1, 2027.

3. **Training and Qualifications.** The Agency Coordinator must attend the Department's Law Enforcement Coordinators symposium and other Department training as required. The Grantee shall notify the Department of any changes to its Agency Coordinator as soon as possible. The Grantee's participating officers must have law enforcement certifications in all areas necessary to conduct the services noted in Section 1 of this exhibit. The Grantee shall keep documentation of training and provide the Department with a list of certified officers on request.

4. **Reimbursement.** The Department will pay the Grantee for the actual cost paid to personnel that worked the SCs, andDDEPs. Claims for payment must specify officers' actual hourly rate of overtime pay based on the Grantee's overtime policy; the Department will not pay any amount in excess of that rate or for any amount that is not above and beyond the officers normal duties. At minimum, the Grantee should submit monthly claims no later than the 10th of each month during this Agreement period. The final claim shall be submitted no later than October 31, 2026. If the final claim is submitted after October 31, 2026, the claim must be accompanied by a justification letter. The Department may deny the claim.

   Each claim must be on a form approved by the Department. The Department will pay the Grantee for the following:

   a. claims submitted by the 10th of each month; claims submitted after the 10th of each month will not be paid unless the Department directs the Grantee to submit on an alternate schedule;
   b. pay, including overtime, for officers conducting traffic safety DWI enforcement in areas consistent with the enforcement plan;
   c. pay, including overtime, for officers attendance at administrative license revocation hearings and court hearings directly related to DWI arrests made while participating in the ENDWI program;
   d. overtime costs for officers or authorized personnel to support activities directly related to the SCs and/or DDEPs conducted during the claim month. Authorized personnel may include dispatcher(s), transport personnel, and others as authorized by checkpoint supervisor or command staff. The Grantee can only claim up to ten percent (10%) of the total monthly claim amount;
   e. in-state travel and related expenses for officers to attend DWI related training approved by the Department in advance to be reimbursed in accordance with 2.42.2 NMAC; and
   f. the employer's portion of related FICA taxes for each reimbursed hour if payment of such is included as a provision in the agency's written policy, personnel rule, municipal or county resolution, union, or association contract, or other document submitted to and accepted by the Department.

5. **Reporting.** *The Grantee must submit activity reports by the 10th of each month using the activity report form provided unless otherwise directed by the Department.* Activity reports must include the type of activity and types of citations issued. The Grantee must report all citations to the Motor Vehicle Division of the New Mexico Taxation and Revenue Department and to the

appropriate court in accordance with New Mexico law. The Grantee must submit timely crash reports to the Department in accordance with NMSA 1978, Section 66-7-207. If the Grantee does not submit crash reports in accordance with NMSA 1978, Section 66-7-207, the Department may hold reimbursement claims until this provision is met.

6. **Funding.** The Department expects the funding source to be IIJA 164 Transfer Funds and the Catalog of Federal Domestic Assistance (CFDA) number to be 20.608. However, both funding source and CFDA number are subject to change at the Department's discretion. The Grantee may transfer funds between budget categories only with prior written approval from the Department. The project's itemized budget is as follows:

Personal Services	$43,312.00
Contractual Services	$0.00
Commodities	$0.00
Indirect	$0.00
Other	$0.00
TOTAL	$43,312.00

7. **Goals.** Projected annual and five-year average alcohol-impaired fatality data indicate increasing numbers and rates of these fatalities from 2021 through 2026. The State's comprehensive set of proven countermeasure strategies and projects including ENDWI enforcement and media, law enforcement and prosecution support, supervised probation, drug courts, and court monitoring will assist the State in achieving reductions in these preventable fatalities. The State has set a 2025 annual target of 140 alcohol-impaired fatalities and a 2026 annual target of 130 alcohol-impaired fatalities.

Docusign Envelope ID: 09670F0C-3B95-45CC-AB7D-BE541D0C437D

Exhibit B: Scope of Work, Training, Reimbursement and Reporting

BUCKLE UP (BKLUP) and CLICK IT OR TICKET (CIOT) Project Number: 06-OP-05b-090

1. **Scope of Work.** The Grantee shall conduct occupant protection directed enforcement patrols (ODEPs) in high crash locations identified in data compiled by local, state or federal government agencies and contained in the Grantee's Operational Plan. The Department encourages the Grantee to accompany the ODEPs with public information, media and educational activities. ODEPs must deploy officers in high crash locations consistent with the enforcement plan for occupant protection issues. If the ODEPs were conducted in areas not consistent with the enforcement plan, the Grantee must submit a justification with the invoice for these services. The Department may deny the invoice for ODEPs based on the justification. The Grantee is encouraged to schedule ODEPs throughout the grant period with a focus on participating during the high-visibility enforcement activities identified below.

2. **Definitions.** For purposes of this exhibit, the following definitions apply:

   "Agency Coordinator" means the person assigned by the Grantee to assume direct responsibility for administering all phases of the Agreement.

   "Directed Enforcement Patrols" means activities that enforce traffic laws in areas consistent with the agency's operational plan.

   "Operational Plan" means a plan based on the most current crash data that identifies the problem to be addressed, goals to be achieved, and the performance measures to be employed. The Grantee may update its operational plan as needed to align with current trends.

   Winter Superblitz Period -- November 15, 2025 to January 1, 2026.

   St. Patrick's Day Mini Superblitz Period -- March 8 to March 17, 2026.

   Spring Superblitz Period- "Put the phone away or pay" --April 6 to April 13, 2026

   Cinco de Mayo May Mini Superblitz Period -- May 1 to May 7, 2026.

   National Occupant Protection Mobilization Click It or Ticket period --May 11 to May 31, 2026.

   Fourth of July Mini Superblitz Period -- July 1 to July 8, 2026.

   National DWI Mobilization Period -- August 12 to September 7, 2026.

   Summer enforcement period -- June 17, 2026 through September 19, 2026.

   Winter Superblitz Period -- November 14, 2026 to January 1, 2027.

3. **Training and Qualifications.** The Agency Coordinator must attend the Department's Law Enforcement Coordinators symposium and other Department training as required. The Grantee shall notify the Department of any changes to its Agency Coordinator as soon as possible. The Grantee's participating officers must have law enforcement certifications in all areas necessary to

conduct the services noted in Section 1 of this exhibit. The Grantee shall keep documentation of training and provide the Department with a list of certified officers on request.

4. **Reimbursement.** The Department will pay the Grantee for the actual cost paid to personnel that worked ODEPs. Claims for payment must specify officers' actual hourly rate of overtime pay based on the Grantee's overtime policy; the Department will not pay any amount in excess of that rate or for any amount that is not above and beyond the officers normal duties. At minimum, the Grantee should submit monthly claims no later than the 10th of each month during this Agreement period. The final claim shall be submitted no later than October 31, 2026 on a form approved by the Department. If the final claim is submitted after October 31, 2026, the claim must be accompanied by a justification letter. The Department may deny the claim.

   The Department will pay the Grantee for the following:

   a. claims submitted by the 10th of each month; claims submitted after the 10th of each month will not be paid unless the Department directs the Grantee to submit on an alternate schedule; b. pay, including overtime, for officers conducting traffic safety occupant protection focused enforcement in areas consistent with the enforcement plan;
   c. attendance at, and excess per diem for, operation safe kids training and the four-day NHTSA standardized child passenger safety training;
   d. assistance at child safety seat clinics or car seat fitting stations; and
   e. the employer's portion of related FICA taxes for each reimbursed hour if payment of such is included as a provision in the agency's written policy, personnel rule, municipal or county resolution, union, or association contract, or other document submitted to and accepted by the Department.

5. **Reporting.** *The Grantee must submit activity reports by the 10th of each month using the activity report form provided unless otherwise directed by the Department.* Activity reports must include the type of activity and types of citations issued. The Grantee must report all citations to the Motor Vehicle Division of the New Mexico Taxation and Revenue Department and to the appropriate court in accordance with New Mexico law. The Grantee must submit timely crash reports to the Department in accordance with NMSA 1978, Section 66-7-207. If the Grantee does not submit crash reports in accordance with NMSA 1978, Section 66-7-207, the Department may hold reimbursement claims until this provision is met.

6. **Funding.** The Department expects the funding source to be IIJA 405b Transfer Funds and the Catalog of Federal Domestic Assistance (CFDA) number to be 20.616. However, both funding source and CFDA number are subject to change at the Department's discretion. The Grantee may transfer funds between budget categories only with prior written approval from the Department. The project's itemized budget is as follows:

Personal Services	$9,198.00
Contractual Services	$0.00
Commodities	$0.00
Indirect	$0.00
Other	$0.00

Docusign Envelope ID: 09670F0C-3B95-45CC-AB7D-BE541D0C437D

TOTAL	$9,198.00

7. Goals.

a. Projected annual and five-year average unrestrained vehicle occupant fatality data indicate increasing numbers and rates of these fatalities from 2021 through 2026. Given the State's comprehensive set of proven countermeasure strategies and associated projects, including enforcement of primary seat belt and child restraint use laws, high-visibility media, and child safety seat distribution system, the State has set a 2025 five-year average target of 122.6 unrestrained vehicle occupant fatalities, and a 2026 five-year average target of 122.5.

b. The State anticipates being able to increase its seat belt use to at least 90 percent over the next three years, and although projections indicate a decline in these numbers through 2026, the State has determined to set targets of 90 percent in 2024, 2025 and 2026.

Docusign Envelope ID: 09670F0C-3B95-45CC-AB7D-BE541D0C437D

Exhibit C: Scope of Work, Training, Reimbursement and Reporting

SELECTIVE TRAFFIC ENFORCEMENT PROGRAM (STEP) and
SUMMER ENFORCEMENT PERIOD Project Number: 06-PT-02-090

1. **Scope of Work.** The Grantee shall conduct directed enforcement patrols (DEPs) in high crash locations identified in data compiled by local, state or federal government agencies and contained in the Grantee's Operational Plan. The Department encourages the Grantee to accompany the DEPs with public information, media and educational activities. DEPs must deploy officers in high crash locations consistent with the Operational Plan. If the DEPs were conducted in areas not consistent with the Operational Plan, the Grantee must submit a justification with the invoice for these services. The Department may deny the invoice for DEPs based on the justification. *The Grantee is encouraged to schedule DEPS through the grant period with a focus on participating during the Summer enforcement period which runs August 12, 2026 through September 7, 2026.*

2. **Definitions.** For purposes of this exhibit, the following definitions apply:

   "Agency Coordinator" means the person assigned by the Grantee to assume direct responsibility for administering all phases of the Agreement.

   "Directed Enforcement Patrols" means activities that enforce traffic laws in areas consistent with the agency's operational plan.

   "Operational Plan" means a plan based on the most current crash data that identifies the problem to be addressed, goals to be achieved, and the performance measures to be employed. The Grantee may update its operational plan as needed to align with current trends.

3. **Training and Qualifications.** The Agency Coordinator must attend the Department's Law Enforcement Coordinators symposium and other Department training as required. The Grantee shall notify the Department of any changes to its Agency Coordinator as soon as possible. The Grantee's participating officers must have law enforcement certifications in all areas necessary to conduct the services noted in Section 1 of this exhibit. The Grantee shall keep documentation of training and provide the Department with a list of certified officers on request.

4. **Reimbursement.** The Department will pay the Grantee for the actual cost paid to personnel that worked DEPs. Claims for payment must specify officers' actual hourly rate of overtime pay based on the Grantee's overtime policy; the Department will not pay any amount in excess of that rate or for any amount that is not above and beyond the officers normal duties. At minimum, the Grantee should submit monthly claims no later than the 10th of each month during this Agreement period. The final claim shall be submitted no later than October 31, 2026 on a form approved by the Department. If the final claim is submitted after October 31, 2026, the claim must be accompanied by a justification letter. The Department may deny the claim.

   The Department will reimburse the Grantee for the following:

a. claims submitted by the 10th of each month; claims submitted after the tenth of each month will not be paid unless the Department directs the Grantee to submit on an alternate schedule;
b. Pay, including overtime pay, for officers conducting the traffic safety enforcement described in paragraph 1 of this **Exhibit C;**
c. training for officers as approved by the Department. Pay for travel and traffic safety related training; and
d. the employer's portion of related FICA taxes for each reimbursed hour if payment of such is included as a provision in the agency's written policy, personnel rule, municipal or county resolution, union, or association contract, or other document submitted to and accepted by the Department.

5. **Reporting.** *The Grantee must submit activity reports by the 10th of each month using the activity report form provided unless otherwise directed by the Department.* Activity reports must include the type of activity and types of citations issued. The Grantee must report all citations to the Motor Vehicle Division of the New Mexico Taxation and Revenue Department and to the appropriate court in accordance with New Mexico law. The Grantee must submit timely crash reports to the Department in accordance with NMSA 1978, Section 66-7-207. If the Grantee does not submit crash reports in accordance with NMSA 1978, Section 66-7-207, the Department may hold reimbursement claims until this provision is met.

6. **Funding – STEP.** The Department expects the funding source to be IIJA NHTSA 402 and the Catalog of Federal Domestic Assistance (CFDA) number to be 20.600. However, both funding source and CFDA number are subject to change at the Department's discretion. The Grantee may transfer funds between budget categories only with prior written approval from the Department. The project's itemized budget is as follows:

Personal Services	$30,303.00
Contractual Services	$0.00
Commodities	$0.00
Indirect	$0.00
Other	$0.00
TOTAL	$30,303.00

7. **Goals.**

a. Annual and five-year average speeding-related fatality data indicate increasing numbers and rates of such fatalities from 2021 through 2026. The State's Police Traffic Services program is focused on all dangerous driving behaviors, including speeding. The proven countermeasure of high-visibility enforcement will support the State's efforts to reduce these fatalities by prioritizing identified high-risk community streets and roadways, and by providing support and training to law enforcement officers. The State has set a 20245annual target of 160 speeding-related fatalities, and a 2026 annual target of 150 speeding-related fatalities.
b. Annual and five-year average alcohol-impaired fatality data indicate increasing numbers and rates of these fatalities from 2021 through 2026. The State's comprehensive set of proven countermeasure strategies and projects including ENDWI enforcement and

media, law enforcement and prosecution support, supervised probation, drug courts and court monitoring will assist the State in achieving reductions in these preventable fatalities. The State has set a 2025 annual target of 140 alcohol impaired fatalities, and a 2026 annual target of 130 alcohol-impaired fatalities.

c. Annual and five-year average unrestrained vehicle occupant fatality data indicate increasing numbers and rates of these fatalities from 2021 through 2026. Given the State's comprehensive set of proven countermeasure strategies and associated projects, including enforcement of primary seat belt and child restraint use laws, high-visibility media, and child safety seat distribution system, the State has set a 2025 five-year average target of 122.6 unrestrained vehicle, and a 2026 target of 122.5 fatalities.

d. The State anticipates being able to increase its seat belt use to at least 90 percent over the next three years, and although projections indicate a decline in these numbers through 2026, the State has set targets of 90 percent seat belt use in 2024, 2025 and 2026.

e. Five-year average fatalities indicate increasing fatalities from 415.6 in 2021 to 470.4 in 2024; however the State has set a 2025 five-year target of 415.4 fatalities, with reductions in 2026.

f. The methodology used to project five-year average suspected serious injuries indicate decreasing levels between 2021 to 2024, with levels more in the 2021 range in 2025 and 2026; however the State has set a 2025 five-year target of 1,010.0 serious injuries, with reductions through 2026.

g. Five-year average motorcyclist data indicate between 50 and 52 motorcyclist fatalities between 2021 and 2024, with slightly higher projections for 2025 and 2026. The State's Motorcycle Safety Program projects focused on Motorcyclist Rider Training, includes highlighting dangerous driving behaviors, such as impaired driving and non-helmet driving or riding. NMDOT also supports motorcycle safety awareness, communications and outreach to both motorcyclists and other vehicle drivers. The State has set a 2025 five-year average target of 49.5 motorcyclist fatalities, with reductions each year through 2026.

h. Projected annual data for under-21 drivers in fatal crashes indicate a reduction in these crashes from a high of 66 in 2021 to 50 (per 2022 preliminary data); however projected data indicate higher numbers of these crashes from 2023 through 2026. The State-funded Driver Education and Driver Safety Program aims to provide quality and comprehensive driver safety education throughout the State to novice drivers with the goal of reducing preventable fatalities. The State has set a 2025 annual target of 55 under -21 drivers in fatal crashes, with reductions each year through 2026.

i. 2021 pedestrian fatalities were at their highest level in over a decade at 102 in 2021, rising from 79 in 2020. 2022 preliminary data indicate a slight decrease to 94, but projections for 2024-2026 are indicating higher numbers of these fatalities. The State has set a 2025 annual target of 90 pedestrian fatalities, with reductions each year through 2026.

j. 2021 five-year bicyclist fatalities were at their highest level in the last five years. Although the five-year average is expected to go up slightly in 2022, projections indicate a downward trend and given this, the State has set a 2025 five-year average target of 5.5 bicyclist fatalities, with reductions each year through 2026.

Exhibit D
Distracted Driving

Exhibit D: Scope of Work, Training, Reimbursement and Reporting

Distrated Driving Project Number: 06-DD-05e-090

1. **Scope of Work.** The Grantee shall conduct distracted driving directed enforcement patrols (DDDEPs) in high crash locations identified in data compiled by local, state or federal government agencies and contained in the Grantee's Operational Plan. The Department encourages the Grantee to accompany the DDDEPs with public information, media and educational activities. DEPs must deploy officers in high crash locations consistent with the enforcement plan for distracted driving issues. If the DEPs were conducted in areas not consistent with the enforcement plan, the Grantee must submit a justification with the invoice for these services. The Department may deny the invoice for DEPs based on the justification. The Grantee is encouraged to schedule DEPs throughout the grant period with a focus on participating during the **"Spring Superblitz Period- Put the Phone Away or Pay"** for distracted driving.

2. **Definitions.** For purposes of this exhibit, the following definitions apply:

   "Agency Coordinator" means the person assigned by the Grantee to assume direct responsibility for administering all phases of the Agreement.

   "Directed Enforcement Patrols" means activities that enforce traffic laws in areas consistent with the agency's operational plan.

   "Operational Plan" means a plan based on the most current crash data that identifies the problem to be addressed, goals to be achieved, and the performance measures to be employed. The Grantee may update its operational plan as needed to align with current trends.

   "Spring Superblitz Period- Put the Phone Away or Pay" means April 6 to April 13, 2026.

3. **Training and Qualifications.** The Agency Coordinator must attend the Department's Law Enforcement Coordinators symposium and other Department training as required. The Grantee shall notify the Department of any changes to its Agency Coordinator as soon as possible. The Grantee's participating officers must have law enforcement certifications in all areas necessary to conduct the services noted in Section 1 of this exhibit. The Grantee shall keep documentation of training and provide the Department with a list of certified officers on request.

4. **Reimbursement.** The Department will pay the Grantee for the actual cost paid to personnel that

worked the ,DEPs. Claims for payment must specify officers' actual hourly rate of overtime pay based on the Grantee's overtime policy; the Department will not pay any amount in excess of that rate or for any amount that is not above and beyond the officers normal duties. At minimum, the Grantee should submit monthly claims no later than the 10th of each month during this Agreement period. The final claim shall be submitted no later than October 31, 2026. If the final claim is submitted after October 31, 2026, the claim must be accompanied by a justification letter. The Department may deny the claim.

Each claim must be on a form approved by the Department. The Department will pay the Grantee for the following:

a. claims submitted by the 10th of each month; claims submitted after the 10th of each month will not be paid unless the Department directs the Grantee to submit on an alternate schedule;;
b. pay, including overtime, for officers conducting traffic safety DWI enforcement in areas consistent with the enforcement plan;
c. overtime costs for officers or authorized personnel to support activities directly related to the DEPs conducted during the claim month. Authorized personnel may include dispatcher(s), transport personnel, and others as authorized by checkpoint supervisor or command staff. The Grantee can only claim up to ten percent (10%) of the total monthly claim amount;
d. in-state travel and related expenses for officers to attend DWI related training approved by the Department in advance to be reimbursed in accordance with 2.42.2 NMAC; and
e. the employer's portion of related FICA taxes for each reimbursed hour if payment of such is included as a provision in the agency's written policy, personnel rule, municipal or county resolution, union, or association contract, or other document submitted to and accepted by the Department.

5. **Reporting.** *The Grantee must submit activity reports by the 10th of each month using the activity report form provided unless otherwise directed by the Department.* Activity reports must include the type of activity and types of citations issued. The Grantee must report all citations to the Motor Vehicle Division of the New Mexico Taxation and Revenue Department and to the appropriate court in accordance with New Mexico law. The Grantee must submit timely crash reports to the Department in accordance with NMSA 1978, Section 66-7-207. If the Grantee does not submit crash reports in accordance with NMSA 1978, Section 66-7-207, the Department may hold reimbursement claims until this provision is met.

6. **Funding.** The Department expects the funding source to be IIJA Distracted Driving Funds and the Catalog of Federal Domestic Assistance (CFDA) number to be 20.616. However, both funding source and CFDA number are subject to change at the Department's discretion. The Grantee may transfer funds between budget categories only with prior written approval from the Department. The project's itemized budget is as follows:

Personal Services	$4,536.00
Contractual Services	$0.00

Commodities	$0.00
Indirect	$0.00
Other	$0.00
TOTAL	$4,536.00

7. **Goals.** Projected annual data indicate the increasing numners and rates of these fatalities through 2026. The State's Police Traffic Services projects of state-wide high-visibiliy distracted driving and speed enforcement will reach approximately 96% of the State's population, coupled with education and media activities with the anticipated outcome of reducing these fatalities. The State has set a 2026 annual target of 170 fatalities in distracted driving crashes.

Docusign Envelope ID: 09670F0C-3B95-45CC-AB7D-BE541D0C437D

Appendix A to Part 1300—Certifications and Assurances for Highway Safety Grants

[Each fiscal year, the Governor's Representative for Highway Safety must sign these Certifications and Assurances affirming that the State complies with all requirements, including applicable Federal statutes and regulations, that are in effect during the grant period.
Requirements that also apply to subrecipients are noted under the applicable caption.]

State: New Mexico Fiscal Year: 2026

By submitting an application for Federal grant funds under 23 U.S.C. Chapter 4 or Section 1906, Public Law 109-59, as amended by Section 25024, Public Law 117-58, the State Highway Safety Office acknowledges and agrees to the following conditions and requirements. In my capacity as the Governor's Representative for Highway Safety, I hereby provide the following Certifications and Assurances:

GENERAL REQUIREMENTS

The State will comply with applicable statutes and regulations, including but not limited to:

- 23 U.S.C. Chapter 4—Highway Safety Act of 1966, as amended;
- Sec. 1906, Public Law 109-59, as amended by Sec. 25024, Public Law 117-58;
- 23 CFR part 1300—Uniform Procedures for State Highway Safety Grant Programs;
- 2 CFR part 200—Uniform Administrative Requirements, Cost Principles, and Audit
- Requirements for Federal Awards;
- 2 CFR part 1201—Department of Transportation, Uniform Administrative Requirements, Cost Principles, and Audit Requirements for Federal Awards.

INTERGOVERNMENTAL REVIEW OF FEDERAL PROGRAMS

The State has submitted appropriate documentation for review to the single point of contact designated by the Governor to review Federal programs, as required by Executive Order 12372 (Intergovernmental Review of Federal Programs).

FEDERAL FUNDING ACCOUNTABILITY AND TRANSPARENCY ACT (FFATA)

The State will comply with FFATA guidance, *OMB Guidance on FFATA Subaward and Executive Compensation Reporting*, August 27, 2010, (https://www.fsrs.gov/documents/OMB_Guidance_on_FFATA_Subaward_and_Executive_Compensation_Reporting_08272010.pdf) by

reporting to FSRS.gov for each sub-grant awarded:

- Name of the entity receiving the award;
- Amount of the award;

- Information on the award including transaction type, funding agency, the North American Industry Classification System code or Catalog of Federal Domestic Assistance number (where applicable), program source;
- Location of the entity receiving the award and the primary location of performance under the award, including the city, State, congressional district, and country; and an award title descriptive of the purpose of each funding action;
    - Unique entity identifier (generated by **SAM.gov**);
- The names and total compensation of the five most highly compensated officers of the entity if:

  (i) the entity in the preceding fiscal year received—

  (I) 80 percent or more of its annual gross revenues in Federal awards;

  (II) $25,000,000 or more in annual gross revenues from Federal awards; and

  (ii) the public does not have access to information about the compensation of the senior executives of the entity through periodic reports filed under section 13(a) or 15(d) of the Securities Exchange Act of 1934 (15 U.S.C. 78m(a), 78o(d)) or section 6104 of the Internal Revenue Code of 1986;
- Other relevant information specified by OMB guidance.

NONDISCRIMINATION

(applies to subrecipients as well as States)

The State highway safety agency [and its subrecipients] will comply with all Federal statutes and implementing regulations relating to nondiscrimination ("Federal Nondiscrimination Authorities"). These include but are not limited to:

- *Title VI of the Civil Rights Act of 1964* (42 U.S.C. 2000d *et seq.*, 78 stat. 252), (prohibits discrimination on the basis of race, color, national origin);
- *49 CFR part 21* (entitled *Non-discrimination in Federally-Assisted Programs of the Department of Transportation—Effectuation of Title VI of the Civil Rights Act of 1964*);
- *28 CFR 50.3* (U.S. Department of Justice Guidelines for Enforcement of Title VI of the Civil Rights Act of 1964);
- *The Uniform Relocation Assistance and Real Property Acquisition Policies Act of 1970,* (42 U.S.C. 4601), (prohibits unfair treatment of persons displaced or whose property has been acquired because of Federal or Federal-aid programs and projects);
- *Federal-Aid Highway Act of 1973, (23 U.S.C. 324 et seq.), and Title IX of the Education Amendments of 1972,* as amended (20 U.S.C. 1681-1683 and 1685-1686) (prohibit discrimination on the basis of sex);
- *Section 504 of the Rehabilitation Act of 1973,* (29 U.S.C. 794 *et seq.*), as amended, (prohibits discrimination on the basis of disability) and 49 CFR part 27;

- *The Age Discrimination Act of 1975,* as amended, (42 U.S.C. 6101 *et seq.*), (prohibits discrimination on the basis of age);
- *The Civil Rights Restoration Act of 1987,* (Pub. L. 100-209), (broadens scope, coverage, and applicability of Title VI of the Civil Rights Act of 1964, The Age Discrimination Act of 1975 and Section 504 of the Rehabilitation Act of 1973, by expanding the definition of the terms "programs or activities" to include all of the programs or activities of the

Federal aid recipients, subrecipients and contractors, whether such programs or activities are Federally-funded or not);

- *Titles II and III of the Americans with Disabilities Act* (42 U.S.C. 12131-12189) (prohibits discrimination on the basis of disability in the operation of public entities, public and private transportation systems, places of public accommodation, and certain testing) and 49 CFR parts 37 and 38

The preceding statutory and regulatory cites hereinafter are referred to as the "Acts" and "Regulations," respectively.

GENERAL ASSURANCES

In accordance with the Acts, the Regulations, and other pertinent directives, circulars, policy, memoranda, and/or guidance, the Recipient hereby gives assurance that it will promptly take any measures necessary to ensure that:

"No person in the United States shall, on the grounds of race, color, or national origin, be excluded from participation in, be denied the benefits of, or be otherwise subjected to discrimination under any program or activity, for which the Recipient receives Federal financial assistance from DOT, including NHTSA."

The Civil Rights Restoration Act of 1987 clarified the original intent of Congress, with respect to Title VI of the Civil Rights Act of 1964 and other non-discrimination requirements (the Age Discrimination Act of 1975, and Section 504 of the Rehabilitation Act of 1973), by restoring the broad, institutional-wide scope and coverage of these nondiscrimination statutes and requirements to include all programs and activities of the Recipient, so long as any portion of the program is Federally assisted.

Docusign Envelope ID: 09670F0C-3B95-45CC-AB7D-BE541D0C437D

SPECIFIC ASSURANCES

More specifically, and without limiting the above general Assurance, the Recipient agrees with and gives the following Assurances with respect to its Federally assisted Highway Safety Grant Program:

1. The Recipient agrees that each "activity," "facility," or "program," as defined in § 21.23(b) and (e) of 49 CFR part 21 will be (with regard to an "activity") facilitated, or will be (with regard to a "facility") operated, or will be (with regard to a "program") conducted in compliance with all requirements imposed by, or pursuant to the Acts and the Regulations.
2. The Recipient will insert the following notification in all solicitations for bids, Requests For Proposals for work, or material subject to the Acts and the Regulations made in connection with all Highway Safety Grant Programs and, in adapted form, in all proposals for negotiated agreements regardless of funding source:
   "The [name of Recipient], in accordance with the provisions of Title VI of the Civil Rights Act of 1964 (78 Stat. 252, 42 U.S.C 2000d to 2000d-4) and the Regulations, hereby notifies all bidders that it will affirmatively ensure that in any contract entered into pursuant to this advertisement, disadvantaged business enterprises will be afforded full and fair opportunity to submit bids in response to this invitation and will not be discriminated against on the grounds of race, color, or national origin in consideration for an award."
3. The Recipient will insert the clauses of appendix A and E of this Assurance (also referred to as DOT Order 1050.2A) [1] in every contract or agreement subject to the Acts and the Regulations.
4. The Recipient will insert the clauses of appendix B of DOT Order 1050.2A, as a covenant running with the land, in any deed from the United States effecting or recording a transfer of real property, structures, use, or improvements thereon or interest therein to a Recipient.
5. That where the Recipient receives Federal financial assistance to construct a facility, or part of a facility, the Assurance will extend to the entire facility and facilities operated in connection therewith.
6. That where the Recipient receives Federal financial assistance in the form of, or for the acquisition of, real property or an interest in real property, the Assurance will extend to rights to space on, over, or under such property.
7. That the Recipient will include the clauses set forth in appendix C and appendix D of this DOT Order 1050.2A, as a covenant running with the land, in any future deeds, leases, licenses, permits, or similar instruments entered into by the Recipient with other parties:
   a. for the subsequent transfer of real property acquired or improved under the applicable activity, project, or program; and
   b. for the construction or use of, or access to, space on, over, or under real property acquired or improved under the applicable activity, project, or program.
8. That this Assurance obligates the Recipient for the period during which Federal financial assistance is extended to the program, except where the Federal financial assistance is to provide, or is in the form of, personal property, or real property, or interest therein, or

structures or improvements thereon, in which case the Assurance obligates the Recipient, or any transferee for the longer of the following periods:

a. the period during which the property is used for a purpose for which the Federal financial assistance is extended, or for another purpose involving the provision of similar services or benefits; or
b. the period during which the Recipient retains ownership or possession of the property.

9. The Recipient will provide for such methods of administration for the program as are found by the Secretary of Transportation or the official to whom he/she delegates specific authority to give reasonable guarantee that it, other recipients, sub-recipients, sub-grantees, contractors, subcontractors, consultants, transferees, successors in interest, and other participants of Federal financial assistance under such program will comply with all requirements imposed or pursuant to the Acts, the Regulations, and this Assurance.
10. The Recipient agrees that the United States has a right to seek judicial enforcement with regard to any matter arising under the Acts, the Regulations, and this Assurance.

By signing this ASSURANCE, the State highway safety agency also agrees to comply (and require any sub-recipients, sub-grantees, contractors, successors, transferees, and/or assignees to comply) with all applicable provisions governing NHTSA's access to records, accounts, documents, information, facilities, and staff. You also recognize that you must comply with any program or compliance reviews, and/or complaint investigations conducted by NHTSA. You must keep records, reports, and submit the material for review upon request to NHTSA, or its designee in a timely, complete, and accurate way. Additionally, you must comply with all other reporting, data collection, and evaluation requirements, as prescribed by law or detailed in program guidance.

The State highway safety agency gives this ASSURANCE in consideration of and for obtaining any Federal grants, loans, contracts, agreements, property, and/or discounts, or other Federal-aid and Federal financial assistance extended after the date hereof to the recipients by the U.S. Department of Transportation under the Highway Safety Grant Program. This ASSURANCE is binding on the State highway safety agency, other recipients, sub-recipients, sub-grantees, contractors, subcontractors and their subcontractors', transferees, successors in interest, and any other participants in the Highway Safety Grant Program. The person(s) signing below is/are authorized to sign this ASSURANCE on behalf of the Recipient.

THE DRUG-FREE WORKPLACE ACT OF 1988 (41 U.S.C. 8103)

The State will provide a drug-free workplace by:

a. Publishing a statement notifying employees that the unlawful manufacture, distribution, dispensing, possession or use of a controlled substance is prohibited in the grantee's workplace, and specifying the actions that will be taken against employees for violation of such prohibition;
b. Establishing a drug-free awareness program to inform employees about:
    1. The dangers of drug abuse in the workplace;
    2. The grantee's policy of maintaining a drug-free workplace;

3. Any available drug counseling, rehabilitation, and employee assistance programs;
4. The penalties that may be imposed upon employees for drug violations occurring in the workplace;
5. Making it a requirement that each employee engaged in the performance of the grant be given a copy of the statement required by paragraph (a);

c. Notifying the employee in the statement required by paragraph (a) that, as a condition of employment under the grant, the employee will—
   1. Abide by the terms of the statement;
   2. Notify the employer of any criminal drug statute conviction for a violation occurring in the workplace no later than five days after such conviction;

d. Notifying the agency within ten days after receiving notice under subparagraph (c)(2) from an employee or otherwise receiving actual notice of such conviction;

e. Taking one of the following actions, within 30 days of receiving notice under subparagraph (c)(2), with respect to any employee who is so convicted—
   1. Taking appropriate personnel action against such an employee, up to and including termination;
   2. Requiring such employee to participate satisfactorily in a drug abuse assistance or rehabilitation program approved for such purposes by a Federal, State, or local health, law enforcement, or other appropriate agency;

f. Making a good faith effort to continue to maintain a drug-free workplace through implementation of all of the paragraphs above.

POLITICAL ACTIVITY (HATCH ACT)

(applies to subrecipients as well as States)

The State will comply with provisions of the Hatch Act (5 U.S.C. 1501-1508), which limits the political activities of employees whose principal employment activities are funded in whole or in part with Federal funds.

CERTIFICATION REGARDING FEDERAL LOBBYING

(applies to subrecipients as well as States)

CERTIFICATION FOR CONTRACTS, GRANTS, LOANS, AND COOPERATIVE AGREEMENTS

The undersigned certifies, to the best of his or her knowledge and belief, that:

1. No Federal appropriated funds have been paid or will be paid, by or on behalf of the undersigned, to any person for influencing or attempting to influence an officer or employee of any agency, a Member of Congress, an officer or employee of Congress, or an employee of a Member of Congress in connection with the awarding of any Federal contract, the making of any Federal grant, the making of any Federal loan, the entering into of any cooperative agreement, and the extension, continuation, renewal, amendment, or modification of any Federal contract, grant, loan, or cooperative agreement;
2. If any funds other than Federal appropriated funds have been paid or will be paid to any person for influencing or attempting to influence an officer or employee of any agency, a

Member of Congress, an officer or employee of Congress, or an employee of a Member of Congress in connection with this Federal contract, grant, loan, or cooperative agreement, the undersigned shall complete and submit Standard Form-LLL, "Disclosure Form to Report Lobbying," in accordance with its instructions;

3. The undersigned shall require that the language of this certification be included in the award documents for all sub-awards at all tiers (including subcontracts, subgrants, and contracts under grant, loans, and cooperative agreements) and that all subrecipients shall certify and disclose accordingly.

This certification is a material representation of fact upon which reliance was placed when this transaction was made or entered into. Submission of this certification is a prerequisite for making or entering into this transaction imposed by section 1352, title 31, U.S. Code. Any person who fails to file the required certification shall be subject to a civil penalty of not less than $10,000 and not more than $100,000 for each such failure.

RESTRICTION ON STATE LOBBYING

(applies to subrecipients as well as States)

None of the funds under this program will be used for any activity specifically designed to urge or influence a State or local legislator to favor or oppose the adoption of any specific legislative proposal pending before any State or local legislative body. Such activities include both direct and indirect (*e.g.*, "grassroots") lobbying activities, with one exception. This does not preclude a State official whose salary is supported with NHTSA funds from engaging in direct communications with State or local legislative officials, in accordance with customary State practice, even if such communications urge legislative officials to favor or oppose the adoption of a specific pending legislative proposal.

CERTIFICATION REGARDING DEBARMENT AND SUSPENSION

(applies to subrecipients as well as States)

INSTRUCTIONS FOR PRIMARY TIER PARTICIPANT CERTIFICATION (STATES)

1. By signing and submitting this proposal, the prospective primary tier participant is providing the certification set out below and agrees to comply with the requirements of 2 CFR parts 180 and 1200.
2. The inability of a person to provide the certification required below will not necessarily result in denial of participation in this covered transaction. The prospective primary tier participant shall submit an explanation of why it cannot provide the certification set out below. The certification or explanation will be considered in connection with the department or agency's determination whether to enter into this transaction. However, failure of the prospective primary tier participant to furnish a certification or an explanation shall disqualify such person from participation in this transaction.
3. The certification in this clause is a material representation of fact upon which reliance was placed when the department or agency determined to enter into this transaction. If it is later determined that the prospective primary tier participant knowingly rendered an

erroneous certification, in addition to other remedies available to the Federal Government, the department or agency may terminate this transaction for cause or default or may pursue suspension or debarment.

4. The prospective primary tier participant shall provide immediate written notice to the department or agency to which this proposal is submitted if at any time the prospective primary tier participant learns its certification was erroneous when submitted or has become erroneous by reason of changed circumstances.
5. The terms **covered transaction, civil judgment, debarment, suspension, ineligible, participant, person, principal, and voluntarily excluded,** as used in this clause, are defined in 2 CFR parts 180 and 1200. You may contact the department or agency to which this proposal is being submitted for assistance in obtaining a copy of those regulations.
6. The prospective primary tier participant agrees by submitting this proposal that, should the proposed covered transaction be entered into, it shall not knowingly enter into any lower tier covered transaction with a person who is proposed for debarment under 48 CFR part 9, subpart 9.4, debarred, suspended, declared ineligible, or voluntarily excluded from participation in this covered transaction, unless authorized by the department or agency entering into this transaction.
7. The prospective primary tier participant further agrees by submitting this proposal that it will include the clause titled "Instructions for Lower Tier Participant Certification" including the "Certification Regarding Debarment, Suspension, Ineligibility and Voluntary Exclusion—Lower Tier Covered Transaction," provided by the department or agency entering into this covered transaction, without modification, in all lower tier covered transactions and in all solicitations for lower tier covered transactions and will require lower tier participants to comply with 2 CFR parts 180 and 1200.
8. A participant in a covered transaction may rely upon a certification of a prospective participant in a lower tier covered transaction that it is not proposed for debarment under 48 CFR part 9, subpart 9.4, debarred, suspended, ineligible, or voluntarily excluded from the covered transaction, unless it knows that the certification is erroneous. A participant is responsible for ensuring that its principals are not suspended, debarred, or otherwise ineligible to participate in covered transactions. To verify the eligibility of its principals, as well as the eligibility of any prospective lower tier participants, each participant may, but is not required to, check the System for Award Management Exclusions website (*https://www.sam.gov/*).
9. Nothing contained in the foregoing shall be construed to require establishment of a system of records in order to render in good faith the certification required by this clause. The knowledge and information of a participant is not required to exceed that which is normally possessed by a prudent person in the ordinary course of business dealings.
10. Except for transactions authorized under paragraph 6 of these instructions, if a participant in a covered transaction knowingly enters into a lower tier covered transaction with a person who is proposed for debarment under 48 CFR part 9, subpart 9.4, suspended, debarred, ineligible, or voluntarily excluded from participation in this transaction, in addition to other remedies available to the Federal Government, the department or agency may terminate the transaction for cause or default.

CERTIFICATION REGARDING DEBARMENT, SUSPENSION, AND OTHER RESPONSIBILITY MATTERS—PRIMARY TIER COVERED TRANSACTIONS

1. The prospective primary tier participant certifies to the best of its knowledge and belief, that it and its principals:
    a. Are not presently debarred, suspended, proposed for debarment, declared ineligible, or voluntarily excluded from participating in covered transactions by any Federal department or agency;
    b. Have not within a three-year period preceding this proposal been convicted of or had a civil judgment rendered against them for commission of fraud or a criminal offense in connection with obtaining, attempting to obtain, or performing a public (Federal, State, or local) transaction or contract under a public transaction; violation of Federal or State antitrust statutes or commission of embezzlement, theft, forgery, bribery, falsification or destruction of records, making false statements, or receiving stolen property;
    c. Are not presently indicted for or otherwise criminally or civilly charged by a governmental entity (Federal, State, or local) with commission of any of the offenses enumerated in paragraph (1)(b) of this certification; and
    d. Have not within a three-year period preceding this application/proposal had one or more public transactions (Federal, State, or local) terminated for cause or default.
2. Where the prospective primary tier participant is unable to certify to any of the Statements in this certification, such prospective participant shall attach an explanation to this proposal.

INSTRUCTIONS FOR LOWER TIER PARTICIPANT CERTIFICATION

1. By signing and submitting this proposal, the prospective lower tier participant is providing the certification set out below and agrees to comply with the requirements of 2 CFR parts 180 and 1200.
2. The certification in this clause is a material representation of fact upon which reliance was placed when this transaction was entered into. If it is later determined that the prospective lower tier participant knowingly rendered an erroneous certification, in addition to other remedies available to the Federal Government, the department or agency with which this transaction originated may pursue available remedies, including suspension or debarment.
3. The prospective lower tier participant shall provide immediate written notice to the person to which this proposal is submitted if at any time the prospective lower tier participant learns that its certification was erroneous when submitted or has become erroneous by reason of changed circumstances.
4. The terms **covered transaction, civil judgment, debarment, suspension, ineligible, participant, person, principal, and voluntarily excluded,** as used in this clause, are defined in 2 CFR parts 180 and 1200. You may contact the person to whom this proposal is submitted for assistance in obtaining a copy of those regulations.

5. The prospective lower tier participant agrees by submitting this proposal that, should the proposed covered transaction be entered into, it shall not knowingly enter into any lower tier covered transaction with a person who is proposed for debarment under 48 CFR part 9, subpart 9.4, debarred, suspended, declared ineligible, or voluntarily excluded from participation in this covered transaction, unless authorized by the department or agency with which this transaction originated.
6. The prospective lower tier participant further agrees by submitting this proposal that it will include the clause titled "Instructions for Lower Tier Participant Certification" including the "Certification Regarding Debarment, Suspension, Ineligibility and Voluntary Exclusion—Lower Tier Covered Transaction," without modification, in all lower tier covered transactions and in all solicitations for lower tier covered transactions and will require lower tier participants to comply with 2 CFR parts 180 and 1200.
7. A participant in a covered transaction may rely upon a certification of a prospective participant in a lower tier covered transaction that it is not proposed for debarment under 48 CFR part 9, subpart 9.4, debarred, suspended, ineligible, or voluntarily excluded from the covered transaction, unless it knows that the certification is erroneous. A participant is responsible for ensuring that its principals are not suspended, debarred, or otherwise ineligible to participate in covered transactions. To verify the eligibility of its principals, as well as the eligibility of any prospective lower tier participants, each participant may, but is not required to, check the System for Award Management Exclusions website (*https://www.sam.gov/*).
8. Nothing contained in the foregoing shall be construed to require establishment of a system of records in order to render in good faith the certification required by this clause. The knowledge and information of a participant is not required to exceed that which is normally possessed by a prudent person in the ordinary course of business dealings.
9. Except for transactions authorized under paragraph 5 of these instructions, if a participant in a covered transaction knowingly enters into a lower tier covered transaction with a person who is proposed for debarment under 48 CFR part 9, subpart 9.4, suspended, debarred, ineligible, or voluntarily excluded from participation in this transaction, in addition to other remedies available to the Federal Government, the department or agency with which this transaction originated may pursue available remedies, including suspension or debarment.

CERTIFICATION REGARDING DEBARMENT, SUSPENSION, INELIGIBILITY AND VOLUNTARY EXCLUSION—LOWER TIER COVERED TRANSACTIONS

1. The prospective lower tier participant certifies, by submission of this proposal, that neither it nor its principals is presently debarred, suspended, proposed for debarment, declared ineligible, or voluntarily excluded from participating in covered transactions by any Federal department or agency.
2. Where the prospective lower tier participant is unable to certify to any of the statements in this certification, such prospective participant shall attach an explanation to this proposal.

BUY AMERICA
(applies to subrecipients as well as States)

The State and each subrecipient will comply with the Buy America requirement (23 U.S.C. 313) when purchasing items using Federal funds. Buy America requires a State, or subrecipient, to purchase with Federal funds only steel, iron and manufactured products produced in the United States, unless the Secretary of Transportation determines that such domestically produced items would be inconsistent with the public interest, that such materials are not reasonably available and of a satisfactory quality, or that inclusion of domestic materials will increase the cost of the overall project contract by more than 25 percent. In order to use Federal funds to purchase foreign produced items, the State must submit a waiver request that provides an adequate basis and justification for approval by the Secretary of Transportation.

CERTIFICATION ON CONFLICT OF INTEREST
(applies to subrecipients as well as States)

GENERAL REQUIREMENTS

No employee, officer, or agent of a State or its subrecipient who is authorized in an official capacity to negotiate, make, accept, or approve, or to take part in negotiating, making, accepting, or approving any subaward, including contracts or subcontracts, in connection with this grant shall have, directly or indirectly, any financial or personal interest in any such subaward. Such a financial or personal interest would arise when the employee, officer, or agent, any member of his or her immediate family, his or her partner, or an organization which employs or is about to employ any of the parties indicated herein, has a financial or personal interest in or a tangible personal benefit from an entity considered for a subaward. Based on this policy:

1. The recipient shall maintain a written code or standards of conduct that provide for disciplinary actions to be applied for violations of such standards by officers, employees, or agents.
    a. The code or standards shall provide that the recipient's officers, employees, or agents may neither solicit nor accept gratuities, favors, or anything of monetary value from present or potential subawardees, including contractors or parties to subcontracts.
    b. The code or standards shall establish penalties, sanctions, or other disciplinary actions for violations, as permitted by State or local law or regulations.
2. The recipient shall maintain responsibility to enforce the requirements of the written code or standards of conduct.

DISCLOSURE REQUIREMENTS

No State or its subrecipient, including its officers, employees, or agents, shall perform or continue to perform under a grant or cooperative agreement, whose objectivity may be impaired because of any related past, present, or currently planned interest, financial or otherwise, in

organizations regulated by NHTSA or in organizations whose interests may be substantially affected by NHTSA activities. Based on this policy:

1. The recipient shall disclose any conflict of interest identified as soon as reasonably possible, making an immediate and full disclosure in writing to NHTSA. The disclosure shall include a description of the action which the recipient has taken or proposes to take to avoid or mitigate such conflict.
2. NHTSA will review the disclosure and may require additional relevant information from the recipient. If a conflict of interest is found to exist, NHTSA may (a) terminate the award, or (b) determine that it is otherwise in the best interest of NHTSA to continue the award and include appropriate provisions to mitigate or avoid such conflict.
3. Conflicts of interest that require disclosure include all past, present, or currently planned organizational, financial, contractual, or other interest(s) with an organization regulated by NHTSA or with an organization whose interests may be substantially affected by NHTSA activities, and which are related to this award. The interest(s) that require disclosure include those of any recipient, affiliate, proposed consultant, proposed subcontractor, and key personnel of any of the above. Past interest shall be limited to within one year of the date of award. Key personnel shall include any person owning more than a 20 percent interest in a recipient, and the officers, employees or agents of a recipient who are responsible for making a decision or taking an action under an award where the decision or action can have an economic or other impact on the interests of a regulated or affected organization.

PROHIBITION ON USING GRANT FUNDS TO CHECK FOR HELMET USAGE

(applies to subrecipients as well as States)

The State and each subrecipient will not use 23 U.S.C. Chapter 4 grant funds for programs to check helmet usage or to create checkpoints that specifically target motorcyclists.

POLICY ON SEAT BELT USE

In accordance with Executive Order 13043, Increasing Seat Belt Use in the United States, dated April 16, 1997, the Grantee is encouraged to adopt and enforce on-the-job seat belt use policies and programs for its employees when operating company-owned, rented, or personally-owned vehicles. The National Highway Traffic Safety Administration (NHTSA) is responsible for providing leadership and guidance in support of this Presidential initiative. For information and resources on traffic safety programs and policies for employers, please contact the Network of Employers for Traffic Safety (NETS), a public-private partnership dedicated to improving the traffic safety practices of employers and employees. You can download information on seat belt programs, costs of motor vehicle crashes to employers, and other traffic safety initiatives at *www.trafficsafety.org*. The NHTSA website (*www.nhtsa.gov*) also provides information on statistics, campaigns, and program evaluations and references.

POLICY ON BANNING TEXT MESSAGING WHILE DRIVING

In accordance with Executive Order 13513, Federal Leadership On Reducing Text Messaging While Driving, and DOT Order 3902.10, Text Messaging While Driving, States are encouraged to adopt and enforce workplace safety policies to decrease crashes caused by distracted driving, including policies to ban text messaging while driving company-owned or rented vehicles, Government-owned, leased or rented vehicles, or privately-owned vehicles when on official Government business or when performing any work on or behalf of the Government. States are also encouraged to conduct workplace safety initiatives in a manner commensurate with the size of the business, such as establishment of new rules and programs or re-evaluation of existing programs to prohibit text messaging while driving, and education, awareness, and other outreach to employees about the safety risks associated with texting while driving.

SECTION 402 REQUIREMENTS

1. To the best of my personal knowledge, the information submitted in the annual grant application in support of the State's application for a grant under 23 U.S.C. 402 is accurate and complete.
2. The Governor is the responsible official for the administration of the State highway safety program, by appointing a Governor's Representative for Highway Safety who shall be responsible for a State highway safety agency that has adequate powers and is suitably equipped and organized (as evidenced by appropriate oversight procedures governing such areas as procurement, financial administration, and the use, management, and disposition of equipment) to carry out the program. (23 U.S.C. 402(b)(1)(A))
3. At least 40 percent of all Federal funds apportioned to this State under 23 U.S.C. 402 for this fiscal year will be expended by or on behalf of political subdivisions of the State in carrying out local highway safety programs (23 U.S.C. 402(b)(1)(C)) or 95 percent by and on behalf of Indian tribes (23 U.S.C. 402(h)(2)), unless this requirement is waived in writing. (This provision is not applicable to the District of Columbia, Puerto Rico, the U.S. Virgin Islands, Guam, American Samoa, and the Commonwealth of the Northern Mariana Islands.)
4. The State's highway safety program provides adequate and reasonable access for the safe and convenient movement of physically handicapped persons, including those in wheelchairs, across curbs constructed or replaced on or after July 1, 1976, at all pedestrian crosswalks. (23 U.S.C. 402(b)(1)(D))
5. As part of a comprehensive program, the State will support a data-based traffic safety enforcement program that fosters effective community collaboration to increase public safety, and data collection and analysis to ensure transparency, identify disparities in traffic enforcement, and inform traffic enforcement policies, procedures, and activities. (23 U.S.C. 402(b)(1)(E))
6. The State will implement activities in support of national highway safety goals to reduce motor vehicle related fatalities that also reflect the primary data-related crash factors within the State, as identified by the State highway safety planning process, including:

Docusign Envelope ID: 09670F0C-3B95-45CC-AB7D-BE541D0C437D

- Participation in the National high-visibility law enforcement mobilizations as identified annually in the NHTSA Communications Calendar, including not less than 3 mobilization campaigns in each fiscal year to—
    - Reduce alcohol-impaired or drug-impaired operation of motor vehicles; and
    - Increase use of seat belts by occupants of motor vehicles;
- Sustained enforcement of statutes addressing impaired driving, occupant protection, and driving in excess of posted speed limits;
- An annual statewide seat belt use survey in accordance with 23 CFR part 1340 for the measurement of State seat belt use rates, except for the Secretary of Interior on behalf of Indian tribes;
- Development of statewide data systems to provide timely and effective data analysis to support allocation of highway safety resources;
- Coordination of triennial Highway Safety Plan, data collection, and information systems with the State strategic highway safety plan, as defined in 23 U.S.C.
- 148(a); and
- Participation in the Fatality Analysis Reporting System (FARS), except for American Samoa, Guam, the Commonwealth of the Northern Mariana Islands, or the United States Virgin Islands

7. The State will actively encourage all relevant law enforcement agencies in the State to follow the guidelines established for vehicular pursuits issued by the International Association of Chiefs of Police that are currently in effect. (23 U.S.C. 402(j))
8. The State will not expend Section 402 funds to carry out a program to purchase, operate, or maintain an automated traffic enforcement system, except in a work zone or school zone. (23 U.S.C. 402(c)(4))

I understand that my statements in support of the State's application for Federal grant funds are statements upon which the Federal Government will rely in determining qualification for grant funds, and that knowing misstatements may be subject to civil or criminal penalties under 18 U.S.C. 1001. I sign these Certifications and Assurances based on personal knowledge, and after appropriate inquiry.

Click here to validate form fields and permit signature

DocuSigned by:
Ricky Serna
5B10E8A62506425

07/31/25

Signature Governor's Representative for Highway Safety — Date

Ricky Serna, Cabinet Secretary New Mexico Dept. of Transpor

Printed name of Governor's Representative for Highway Safety

SKM_C551i25103117580

Final Audit Report

2025-11-07

Created:	2025-11-07
By:	MATTHEW HARDING (mrharding@santafenm.gov)
Status:	Signed
Transaction ID:	CBJCHBCAABAAxpM-IIiIL4CeWSC2oydPbnxxQ2nhEAzM

"SKM_C551i25103117580" History

Document created by MATTHEW HARDING (mrharding@santafenm.gov)
2025-11-07 - 4:53:54 PM GMT- IP address: 63.232.20.2

Document emailed to cwryan@santafenm.gov for signature
2025-11-07 - 4:55:04 PM GMT

Email viewed by cwryan@santafenm.gov
2025-11-07 - 5:24:16 PM GMT- IP address: 104.47.64.254

Signer cwryan@santafenm.gov entered name at signing as Christoher W. Ryan
2025-11-07 - 5:25:08 PM GMT- IP address: 63.232.20.2

Document e-signed by Christoher W. Ryan (cwryan@santafenm.gov)
Signature Date: 2025-11-07 - 5:25:10 PM GMT - Time Source: server- IP address: 63.232.20.2

Agreement completed.
2025-11-07 - 5:25:10 PM GMT

Powered by Adobe Acrobat Sign

ENDWI FY26

Final Audit Report 2026-01-08

Created:	2026-01-07
By:	TARA RICO (trrico@santafenm.gov)
Status:	Signed
Transaction ID:	CBJCHBCAABAAN4MwQdDfyL5QC5KnETJGlktzRv9ZP-7V

"ENDWI FY26" History

Document created by TARA RICO (trrico@santafenm.gov)
2026-01-07 - 9:31:26 PM GMT- IP address: 63.232.20.2

Document emailed to Patrick Trujillo (pjtrujillo@santafenm.gov) for signature
2026-01-07 - 9:33:39 PM GMT

Email viewed by Patrick Trujillo (pjtrujillo@santafenm.gov)
2026-01-07 - 9:34:47 PM GMT- IP address: 104.47.65.254

Document e-signed by Patrick Trujillo (pjtrujillo@santafenm.gov)
Signature Date: 2026-01-07 - 9:36:58 PM GMT - Time Source: server- IP address: 63.232.20.2

Document emailed to tjgrundler@santafenm.gov for signature
2026-01-07 - 9:37:00 PM GMT

Email viewed by tjgrundler@santafenm.gov
2026-01-07 - 9:46:25 PM GMT- IP address: 104.47.64.254

Signer tjgrundler@santafenm.gov entered name at signing as THOMAS GRUNDLER
2026-01-07 - 9:47:51 PM GMT- IP address: 63.232.20.2

Document e-signed by THOMAS GRUNDLER (tjgrundler@santafenm.gov)
Signature Date: 2026-01-07 - 9:47:53 PM GMT - Time Source: server- IP address: 63.232.20.2

Document emailed to mtbonifer@santafenm.gov for signature
2026-01-07 - 9:47:54 PM GMT

Email viewed by mtbonifer@santafenm.gov
2026-01-07 - 9:52:53 PM GMT- IP address: 104.47.65.254

Signer mtbonifer@santafenm.gov entered name at signing as Matthew Bonifer
2026-01-07 - 10:01:20 PM GMT- IP address: 63.232.20.2

Powered by Adobe Acrobat Sign

Document e-signed by Matthew Bonifer (mtbonifer@santafenm.gov)

Signature Date: 2026-01-07 - 10:01:22 PM GMT - Time Source: server- IP address: 63.232.20.2

Document emailed to ajhopkins@santafenm.gov ajhopkins@santafenm.gov (ajhopkins@santafenm.gov) for signature

2026-01-07 - 10:01:23 PM GMT

Email viewed by ajhopkins@santafenm.gov ajhopkins@santafenm.gov (ajhopkins@santafenm.gov)

2026-01-08 - 5:44:51 PM GMT- IP address: 104.47.65.254

Document e-signed by ajhopkins@santafenm.gov ajhopkins@santafenm.gov (ajhopkins@santafenm.gov)

Signature Date: 2026-01-08 - 5:45:38 PM GMT - Time Source: server- IP address: 63.232.20.2

Agreement completed.

2026-01-08 - 5:45:38 PM GMT

Powered by Adobe Acrobat Sign

CITY OF SANTA FE

Date: January 12, 2026

To: Governing Body, Finance Committee, and Quality of Life Committee

To: Grants

From: Manuel Sanchez, Senior Services Division Director/Interim Community Services Department Director Manuel Sanchez Manuel Sanchez (Jan 12, 2026 15:19:29 MST)

Subject: New Mexico Capital Outlay Grant Agreement A22-G5353 (MEG)

Vendor Name: NM Aging and Long-Term Services Department (ALTSD)

Munis Vendor Number: 6170

ITEM AND ISSUE:

Community Health & Safety Department/Senior Services Division respectfully requests your review and approval of a NM Capital Outlay Grant Agreement Capital Appropriation Project A22-G5353 in the total amount of $235,630.00 not to exceed for the purchase and installation of meals equipment and other equipment for the Mary Esther Gonzales senior center for a term of June 30, 2026 with New Mexico Aging and Long-Term Services Department.

BACKGROUND AND SUMMARY:

The Senior Services Division is requesting the approval of the State of New Mexico ALTSD FY26 New Mexico Capital Outlay Agreement Capital Appropriation Project A22-5353 to purchase and install meals equipment and other equipment for the Mary Esther Gonzales senior center. The attached Agreement reflects the Fiscal Year 2026 awarded appropriations of $235,630.00. Furthermore, this grant is funded at 100% State dollars which will subsidize the City's general fund account for its intended purpose.

PRIOR APPROVALS AND SUPPORTING INFORMATION:

FUNDING SOURCE:

Fund Name/Number: CIP Community Development / 345

Munis Org Name/Number: NM Agency on Aging / 490240
Seniors/Comm Dev CIP / 3459981

Munis Object Name/Number: Equipment & Machinery Non-Exempt / 570500

Budget Officer / Designee: _____ **Date:** _____

Budget Officer Comment/Exceptions: _____

PROCUREMENT METHOD:

The procurement method used was Choose an item.

Chief Procurement Officer (CPO)/Designee: _____ **Date:**_____

CPO Comment/Exceptions: _____

ASSOCIATED APPROVALS:

IT Components included? ☐ **Yes |** ☒ **No**

Approval: _____ **Title:** _____ **Date:** _____

Comment/Exceptions: _____

Treasury/Point of Sale Components included? ☐ **Yes |** ☒ **No**

Approval: _____ **Title:** _____ **Date:** _____

Comment/Exceptions: _____

Vehicles included? ☐ **Yes |** ☒ **No**

Approval: _____ **Title:** _____ **Date:** _____

Comment/Exceptions: _____

Construction to City Facilities, Furniture, and/or Fixtures included? ☐ **Yes |** ☒ **No**

Approval: _____ **Title:** _____ **Date:** _____

Comment/Exceptions: _____

Is this an externally funded purchase? ☒ **Yes |** ☐ **No**

If yes, what is the issuing agency: NM Agency on Aging

Approval: **Title:** _____ **Date:** _____

Comment/Exceptions: _____

Is this a Capital Asset or Project? ☒ **Yes |** ☐ **No**

Project Ledger Number: SSD2634501

Approval: Erika Lujan **Title:** _____ **Date:** _____

Comment/Exceptions: _____

ATTACHMENTS:
Grant Agreement A22-G5353 (MEG)

Project Ledger Request Form

BAR

NEW MEXICO CAPITAL OUTLAY GRANT AGREEMENT
CAPITAL APPROPRIATION PROJECT

THIS AGREEMENT is made and entered into by and between the State of New Mexico, AGING AND LONG-TERM SERVICES DEPARTMENT, 2550 Cerrillos Road, Santa Fe, NM 87505, ("**Department**") and City of Santa Fe, ("**Grantee**") (individually "**Party**" and collectively "**Parties**"). This Agreement shall be effective as of the date the Department executes it ("**Effective Date**").

WITNESSETH

WHEREAS, in the Laws of 2022, Chapter 55, Section 10, Subsection A, Paragraph 54, the Legislature made an appropriation to the Department, funds from which the Department is making available to the Grantee pursuant to this Agreement; and

WHEREAS, the Department is granting to Grantee, and the Grantee is accepting the grant of funds from this appropriation, in accordance with the terms and conditions of this Agreement;

NOW, THEREFORE, in consideration of the mutual covenants and obligations contained herein, the parties hereby mutually agree as follows:

AGREEMENT

I. PROJECT DESCRIPTION, GRANT AMOUNT, AND REVERSION

A. A22-G5353 ("**Project**") June 30, 2026 ("**Reversion Date**"). Laws of 2022, Chapter 55, Section 10, Subsection A, Paragraph 54, two hundred thirty-five thousand six hundred thirty dollars $235,630, to purchase and install meals equipment and other equipment for the Mary Esther Gonzales senior center in Santa Fe in Santa Fe county.

B. Grantee's total reimbursements shall not exceed two hundred thirty-five thousand six hundred thirty dollars $235,630 ("**Appropriation Amount**") minus the allocation for Art in Public Places ("**AIPP amount**"), if applicable, zero dollars, $0 which equals two hundred thirty-five thousand six hundred thirty dollars, $235,630 ("**Adjusted Appropriation Amount**").

C. In the event of a conflict among the Appropriation Amount, the Reversion Date, as defined herein and/or the purpose of the Project, as set forth in this Agreement, and the corresponding appropriation language in the laws cited above in this Article I, the language of the laws cited herein shall control.

The information contained in Article I is referred to collectively as the "**Project Description**."

II. DISBURSEMENT LIMITATION

A. Upon the Effective Date, the Grantee shall submit to the Department a comprehensive procurement plan and expenditure plan, detailing a Project timeline with milestones, required procurements, and identifying expected expenditures per milestone (collectively, "**Project Budget**"). The Department shall review and approve the Project Budget by issuing a Notice of Department's Obligation ("**Notice of Obligation**"), in accordance with the Project Description, a sample of which is attached hereto as **Exhibit A** and incorporated herein by reference. After receipt of a Notice of Obligation, the Grantee may be reimbursed for allowable costs up to the Adjusted Appropriation Amount. This Agreement and any reimbursements up to the Adjusted Appropriation Amount are expressly conditioned upon the following:

a. Irrespective of any Notice of Obligation, Grantee's expenditures shall be made in accordance with the Project Budget, on or before the Reversion Date and/or, if applicable, any Early Termination Date; and
b. The total amount received by Grantee shall not exceed the lesser of:
   i. the Adjusted Appropriation Amount identified in Article I (B) herein; or
   ii. the total of all amounts stated in the Notice(s) of Obligation evidencing the Department has received and accepted Grantee's Third-Party Obligation(s); and
c. Grantee's expenditures are made and accounted for pursuant to the State Procurement Code, State's Model Accounting Practices, and execution of binding written obligations or purchase orders with third-party contractors or vendors for the provision of services, including professional services, or the purchase of tangible personal property and real property for the Project ("**Third-Party Obligations**"); and
d. Grantee's submittal of timely Requests for Payment and supporting documentation in accordance with the procedures set forth in this Agreement; and
e. In the event capital assets acquired with Project funds are to be sold, leased, or licensed to or operated by a private entity, the sale, lease, license, or operating agreement:
   i. must be approved by the applicable oversight entity (if any) in accordance with §§ 13-6-2, 13-6-2.1, and 13-6-3; or
   ii. If no oversight entity is required to approve the transaction, the Department of Finance and Administration's Infrastructure Planning Development Division (IPDD) must approve it as complying with the law.

B. Prior to the sale, lease, license, or operating agreement being approved pursuant to Articles II(A)(e) (i) or (ii) herein, the Department may, in its sole and absolute discretion, unless inconsistent with State Board of Finance imposed conditions, reimburse Grantee for necessary expenditures incurred to develop the Project sufficiently to make the sale, lease, license, or operating agreement commercially feasible, limited to planning and design expenditures; and

C. Grantee's submission of documentation of all Third-Party Obligations and amendments thereto (including terminations) to the Department and the Department's issuance of a Notice of Obligation for a particular amount in accordance with the terms of this Agreement shall be governed by the following:

a. Grantee is authorized to budget the particular amount set forth in the Notice of Obligation, execute the Third-Party Obligation, and request the Third-Party to begin work after issuance of a Notice of Obligation by the Department.
b. Grantee acknowledges and agrees that any Third-Party Obligations agreed to prior to receiving a Notice of Obligation are its sole responsibility.
c. Grantee shall submit to the Department one copy of all Third-Party Obligations and amendments thereto (including terminations) as soon as possible after execution by the Third-Party but prior to execution by the Grantee.
d. Department may, in its sole and absolute discretion, issue a Notice of Obligation for the particular amount of a Third-Party Obligation that only obligates the Department to reimburse Grantee's expenditures made on or before the Reversion Date or an Early Termination Date. The current Notice of Obligation form is incorporated herein and attached hereto as Exhibit 2.

D. Grantee shall provide all necessary qualified personnel, materials, and facilities to implement the Project. The Grantee shall finance its share (if any) of the costs of the Project, including all Project overruns.

E. Prior to entering into this Agreement, the Department conducted a risk assessment on the Grantee and a project readiness review for the Project. In accordance with State Model Accounting Practices, FIN

9.2, if the Department determines that the expenditure of Project funds by the Grantee requires special conditions, those conditions are identified and listed in **Exhibit D**, which is attached and incorporated by reference. The Parties agree that, to the extent the Department, in its sole and absolute discretion, determines additional special conditions are necessary or that existing special conditions are no longer required, it may update **Exhibit D** from time to time without the need for a formal amendment of this Agreement.

F. Project funds shall not be used for purposes other than those authorized by the Department in accordance with the Project Description.

G. Project funds cannot be used to reimburse the Grantee for indirect Project costs unless specifically allowed by law.

III. NOTICES

The following provisions shall apply whenever written notices, including written decisions, are to be given or received related to this Agreement.

A. The Grantee designates the person(s) listed below, or their successor, as their official representative(s) concerning all matters related to this Agreement:

a. Grantee: City of Santa Fe
   i. Name: Manuel Sanchez
   ii. Title: Senior Services Director
   iii. Address: PO Box 909, Santa Fe, NM 87504-0909
   iv. Email: mnsanchez@santafenm.gov
   v. Telephone: 505.955.4710

B. The Grantee designates the person(s) listed below, or their successor, as their Fiscal Officer or Fiscal Agent concerning all matters related to this Agreement:

a. Grantee: City of Santa Fe
   i. Name: Brittany Gurule
   ii. Title: Accounting Financial Analyst
   iii. Address: PO Box 909, Santa Fe, NM 87504-0909
   iv. Email: bsgurule@santafenm.gov
   v. Telephone: 505.955.6130

C. The Department designates the persons listed below, or their successors, as the Points of Contact for matters related to this Agreement.

a. Department:
   i. Name: Tasha Martinez | Julia Richard
   ii. Title: Bureau Chief | Project Coordinator
   iii. Address: 2550 Cerrillos Road, Santa Fe, NM 87505
   iv. Email: tasha.martinez@altsd.nm.gov | julia.richard@altsd.nm.gov
   v. Telephone: 505.316.8900 | 505.629.7751

The Parties agree that all notices, including written decisions, related to this Agreement shall be sent to the persons named above by email or regular mail. For mailings, notices shall be deemed to have been given and received upon the date of the receiving party's actual receipt or five (5) calendar days after

mailing, whichever shall first occur. In the case of email transmissions, the notice shall be deemed to have been given and received on the date reflected on the delivery receipt of the email.

IV. TERM & DEADLINE TO EXPEND FUNDS

A. The term of this Agreement shall begin on the Effective Date and terminate on the 30th day of June during the calendar year of the Reversion Date unless Terminated Before Reversion Date ("**Early Termination**") pursuant to Article V herein (collectively "**Term**").

B. The Project's funds must be expended on or before the Reversion Date and, if applicable, the Early Termination Date of this Agreement.

a. For purposes of this Agreement, it is not sufficient for the Grantee to encumber the Project funds on its books on or before the Reversion Date or Early Termination Date.
b. For purposes of this Agreement, an expenditure of funds has occurred on the date the particular quantity of goods is delivered to and received by the Grantee, title to the goods is transferred to the Grantee, and/or as of the date particular services are rendered to and accepted by the Grantee.
c. For purposes of this Agreement, an encumbrance of funds pursuant to a contract or purchase order with a third-party does not qualify as an expenditure.

V. EARLY TERMINATION

A. General Provision. The Department may terminate this Agreement before the Reversion Date based on the Completion of the Project, Complete Expenditure of the Adjusted Appropriation, and/or Violation of this Agreement. Early Termination hereunder includes:

a. Termination due to completion of the Project before the Reversion Date;
b. Termination due to complete expenditure of the Adjusted Appropriation Amount before the Reversion Date;
c. Termination for violation of the terms of this Agreement; or
d. Termination for suspected mishandling of public funds, including but not limited to fraud, waste, abuse, and conflicts of interest.

B. Non-appropriation. This Agreement is expressly contingent upon the New Mexico State Legislature making sufficient appropriations and authorizations for the Project Description.

a. If the Legislature does not appropriate the Appropriation Amount, this Agreement shall terminate upon the Department giving the Grantee written notice of such termination. Such termination shall be effective as of the effective date of the law making the non-appropriation.
i. The Department's decision as to whether sufficient appropriations or authorizations are available shall be final. Grantee hereby waives any rights to assert an impairment of contract claim against the State of New Mexico in the event of Early Termination of this Agreement.
b. As used herein, "non-appropriate" or "non-appropriation" includes the following actions by the New Mexico Legislature:
i. Deauthorization, reauthorization, or revocation of a prior authorization.

C. Grant Disbursements in the Event of Early Termination. In the event of Early Termination, the Department's sole and absolute obligation to reimburse the Grantee is expressly conditioned upon the limitations set forth in Article II above.

D. Notice. Either Party may terminate this Agreement prior to the Reversion Date by providing the other Party with a minimum of fifteen (15) days advance written notice of the Early Termination. Grantee hereby waives any rights to assert an impairment of contract claim against the State of New Mexico in the event of Early Termination of this Agreement by the Department.

VI. SUSPENSION OF NEW OR FURTHER OBLIGATIONS

A. Department, in its sole and absolute discretion, may provide written notice to Grantee to suspend entering into further obligations. Upon the receipt of such written notice by the Grantee:

a. Grantee shall immediately suspend entering into new or further written obligations with third parties;
b. Department will suspend the issuance of any new or further Notice of Obligation under this Agreement; and
c. Department may direct the Grantee to implement a corrective action plan in accordance with Article VI (D) herein.

B. In the event of Suspension of this Agreement, the Department's sole and absolute obligation to reimburse the Grantee is expressly conditioned upon the limitations set forth in Article II herein.

C. A suspension of new or further obligations under this Agreement shall remain in effect unless or until the date the Grantee receives written notice given by the Department informing the Grantee that the Suspension has been lifted or that the Agreement has been Early Terminated in accordance with Article V herein. If the Suspension is lifted, the Department will consider further requests for a Notice of Obligation.

D. Corrective Action Plan in the Event of Suspension. Where the Department, in its sole and absolute discretion, directs Grantee to suspend entering into new or further written obligations with third parties pursuant to Article VI(A), the Department may, but is not obligated to, require the Grantee to develop and implement a written corrective action plan to remedy the grounds for the Suspension.

a. Such a corrective action plan must be approved by the Department and be signed by the Grantee.
b. Failure to sign a corrective action plan or meet the terms and deadlines set forth in the signed corrective action plan is hereby deemed a violation of the terms of this Agreement for purposes of Early Termination, Article V(A)(c).
c. A corrective action plan shall be in addition to, and not in lieu of, any other equitable or legal remedy authorized hereunder or at law, including but not limited to Early Termination.

VII. AMENDMENTS

Unless expressly stated otherwise herein, this Agreement shall not be altered, changed, or amended except by an instrument in writing duly executed by both parties hereto with the same formalities as this agreement.

VIII. REPORTING

A. Database Reporting

a. Grantee shall provide the Department with quarterly reports of Project activity, entering the required Project information directly into a database required by the Department.

b. Additionally, Grantee shall certify on each Request for Payment form, attached hereto as **Exhibit B** and incorporated herein, that all information provided in the database is true and accurate, updates to the database have been maintained, and all Project activity complies with applicable law and the terms of this Agreement

c. Grantee hereby acknowledges that failure to perform and/or certify updates to the database will jeopardize the reimbursement of funds. The Department shall give Grantee a minimum of fourteen (14) days' advance written notice of any changes to the information the Grantee is required to report.

d. At the Department's discretion, all reports required hereunder may be directed to and facilitated through an electronic database.

e. Quarterly reports shall be due on the last day of the month, that is, 30 days prior to the end of the quarter following the execution of this Agreement by the Department and ending during the quarter of the submission of the final request for reimbursement for the Project, or the following quarter. Quarterly reports shall be in the form required by **Exhibit C**, attached hereto and incorporated herein by reference.

B. Requests for Additional Information/Project Inspection

a. During the term of this Agreement and the Record Retention Period, the Department may:
   i. Request additional information regarding the Project as it deems necessary and
   ii. Conduct on-site inspections of the Project at reasonable times and upon reasonable notice.

b. Grantee shall respond to such requests for additional information within the time established by the Department.

IX. REQUEST FOR PAYMENT PROCEDURES

A. Grantee shall request payment by submitting the form attached hereto as **Exhibit B**. Payment requests are subject to the following procedures:

a. Each Request for Payment must be in accordance with the Project Budget and contain proof of payment by the Grantee or liabilities incurred by the Grantee.
   i. Proof of payment must demonstrate the validity of an expenditure or liabilities incurred by Grantee.
   ii. However, Grantee may be reimbursed for unpaid liabilities only if the Department, in its sole and absolute discretion, agrees to do so and in accordance with any special conditions imposed by the Department.

b. Obligated but unpaid invoices received by Grantee from third-party contractors or vendors may be reimbursed if the invoices comply with the provisions of this Agreement.
   i. The Grantee shall make payment to those contractors or vendors within five (5) business days from the date of receiving reimbursement from the Department or in a shorter period than the Department may prescribe in writing.
   ii. The Department reserves the right to make such payments directly to the contractors or vendors as a special condition under this Agreement.
   iii. The Grantee is required to certify to the Department proof of payment to the third-party contractor or vendor within five (5) business days from the date the Department reimburses the Grantee.

B. Until the Project is fully planned, designed, and all necessary procurements identified in the Project Budget are completed, Grantee's reimbursements will be limited to the planning, design, and procurement costs outlined in the Project Budget. Once the planning, designing, and procuring stages are complete, the Grantee must obligate at least ten percent (10%) of the Adjusted Appropriation Amount within one (1) year

and must have utilized at least eighty-five percent (85%) of the Adjusted Appropriation Amount six (6) months before the reversion date.

C. Deadlines. Grantee shall submit requests for Payments to the Department on the earlier of:

a. Immediately as Grantee receives them, but at a maximum of thirty (30) days from when Grantee incurred the expenditure or liability; or
b. The date of Early Termination or Reversion Date for expenditures or liabilities incurred before the Early Termination date or Reversion Date.

D. Grantee's failure to abide by the requirements set forth in Article II and Article IX herein may result in the denial of its Request for Payment. Department reserves the right to reject a payment request for the Project unless and until it is satisfied that the expenditures or liabilities are for permissible purposes within the meaning of the Project Description, identified within the Project Budget, and that the Grantee is otherwise in compliance with this Agreement.

a. Department's authority to reject any Request for Payment is in addition to, and not in lieu of, any other legal or equitable remedy available to the Department under this Agreement, at law, or in equity.

X. PROJECT CONDITIONS AND RESTRICTIONS

A. The following general conditions and restrictions shall apply to the Project:

a. The Project's funds must be spent in accordance with all applicable state laws, regulations, policies, and guidelines, including, but not limited to, the State Procurement Code.
b. The Project's expenditures and liabilities must be accounted for in accordance with the State's Model Accounting Practices, as amended from time to time.
c. The Project must be implemented in accordance with the New Mexico Public Works Minimum Wage Act, Section 13-4-10 through 13-4-17 NMSA 1978, as applicable.
d. The Project must provide a public benefit above and beyond any incidental benefit to private entities in accordance with applicable law, including, but not limited to, Article IX, Section 14 of the Constitution of the State of New Mexico.
e. Without prior written approval from the Department and State Board of Finance, for the useful life of any asset purchased under this Agreement, Grantee shall not convert any property acquired, built, renovated, repaired, designed, or developed with Project funds to uses other than those specified in the Project Description.
f. In addition to other remedies available at law or in equity, any disposal or conversion of property acquired, built, renovated, repaired, designed, or developed with Project funds without the Department's and the Board of Finance's express written approval will trigger the Département's right to reimbursement from Grantee of the Appropriated Amount, transfer proceeds from any disposition of property to the State, or otherwise provide consideration to the State for the Appropriated Amounts.
g. Grantee shall comply with all applicable federal and state laws, rules, and regulations pertaining to civil rights and equal employment opportunity.
h. In accordance with all such laws, rules, and regulations, the Grantee agrees to assure that no person shall, on the grounds of race, color, national origin, sex, sexual preference, age, or handicap, be excluded from participation in the Project, use of the Project, employment with Grantee, or

otherwise be denied benefits/subject to discrimination for any activity performed under this Agreement.

i. Where the Department, in its sole and absolute discretion, determines Grantee has failed to comply with the above conditions and restrictions, Grantee agrees to take appropriate steps to correct any deficiencies immediately. The Grantee's failure to implement such appropriate steps within a reasonable time, but no longer than thirty (30) days after notice from the Department, constitutes a breach of this Agreement and grounds for Early Termination.

XI. REPRESENTATIONS AND WARRANTIES

A. Reliance by Department.

a. Grantee expressly acknowledges that the Department relies on the representations and warranties made by Grantee in this Agreement. Grantee acknowledges that such representations and warranties are a material inducement for the Department to enter into this Agreement and provide the Appropriated Amount.

b. Grantee shall ensure all representations and warranties provided herein are true, accurate, and complete as of the date of the Effective Date and shall remain so throughout the Term of this Agreement. Grantee is responsible for promptly notifying the Department in writing of any changes or inaccuracies in the representations and warranties contained herein.

B. Grantee hereby represents and warrants the following:

a. Grantee has taken all necessary steps to attain the legal authority to receive and expend the Project's funds.

b. Grantee has duly authorized this Agreement, and the person executing it has authority to do so. Once executed by Grantee, this Agreement shall constitute a binding obligation of Grantee, enforceable according to its terms.

c. Grantee's obligations hereunder do not conflict with any law, ordinance, or resolution applicable to Grantee, Grantee's charter (if applicable), or any judgment or decree to which Grantee is subject.

d. Grantee has independently confirmed that the Project Description, including, but not limited to, the Appropriated Amount and Reversion Date, is consistent with the underlying appropriation in law.

e. Grantee's governing body has duly adopted or passed as an official act a resolution, motion, or similar action authorizing the person identified as the official representative of the Grantee to sign and submit Requests for Payment on behalf of Grantee.

f. Grantee will abide by New Mexico laws regarding conflicts of interest, governmental conduct, and whistleblower protection.

   i. Grantee agrees explicitly none of its officers or employees or its designees or agents, no member of the governing body, and no other public official of Grantee who exercises any function or responsibility with respect to this Agreement, shall have any interest, direct or indirect, in any contract or subcontract, or the proceeds thereof, for the Project.

   ii. Further, Grantee will require all of its contractors to incorporate the language set forth in this paragraph prohibiting conflicts of interest in all subcontracts.

g. No funds have been paid or will be paid, by or on behalf of the Grantee, to any person for influencing or attempting to influence an officer or employee of the State, any agency, or body in connection with the awarding of any Third-Party Obligation.

i. Grantee will require certifying language prohibiting lobbying to be included in the award documents for all subawards, including subcontracts, loans, and cooperative agreements.

C. Consequences of False or Misleading Representations. If any representation or warranty made by Grantee is found to be false or misleading, the Department shall have the right to exercise any or all of the following remedies:

a. **Termination of Agreement:** Department may terminate this Agreement immediately upon written notice to the Grantee.
b. **Repayment of Grant Funds:** Grantee shall repay all Appropriated Amounts disbursed under this Agreement, upon demand by the Department.
c. **Other Remedies:** Department may pursue any other remedies available at law or in equity.

D. Survival of Representations and Warranties. The representations and warranties made by the Grantee shall survive the Early Termination or expiration of this Agreement.

XII. PROJECT RECORDS

A. Grantee shall be strictly accountable for receipts and disbursements relating to the Project's funds. The Grantee shall follow generally accepted accounting principles and the State's Model Accounting Practices and, if feasible, maintain a separate bank account or fund with a separate organizational code to ensure separate budgeting and accounting of the funds.

B. For six (6) years following the Project's completion ("**Record Retention Period**"), Grantee shall maintain all Project-related records, including, but not limited to, all financial records, requests for proposals, invitations to bid, selection and award criteria, contracts and subcontracts, advertisements, minutes of pertinent meetings, as well as records sufficient to fully account for the amount and disposition of the Appropriated Amount from all sources budgeted for the Project, the purpose for which such funds were used, and such other records as the Department may prescribe.

C. Grantee shall make all Project records available to the Department, the Department's Independent Public Accountant, and the New Mexico State Auditor upon request. With respect to the funds that are the subject of this Agreement, if the State Auditor or the Department finds any funds were improperly expended, Grantee shall be required to reimburse the State all amounts found to be improperly expended.

XIII. IMPROPERLY REIMBURSED FUNDS

If the Department determines part or all of the Appropriation Amount was improperly reimbursed to Grantee, including but not limited to funds reimbursed to Grantee based upon fraud, mismanagement, misrepresentation, misuse, violation of law by the Grantee, after ten (10) days' notice to Grantee and the opportunity to return such funds to the Department, the Department may offset any funds due to Grantee from the State, until the Appropriation Amount is fully repaid.

XIV. LIABILITY

Neither Party shall be responsible for liability incurred as a result of the other Party's acts or omissions in connection with this Agreement. Any liability incurred in connection with this Agreement is subject to immunities and limitations of the New Mexico Tort Claims Act.

XV. SCOPE OF AGREEMENT

This Agreement constitutes the entire and exclusive agreement between the Parties concerning the subject matter hereof. The Agreement supersedes all prior or contemporaneous agreements, understandings, discussions, communications, and representations, written or verbal.

XVI. REQUIRED NON-APPROPRIATIONS CLAUSE

A. Grantee acknowledges and agrees to include a "non-appropriations" clause in all contracts between it and other parties that are (i) funded in whole or part by funds made available under this Agreement and (ii) entered into after the effective date of this Agreement that states:

a. "The terms of this Agreement are contingent upon sufficient appropriations and authorization being made by the Legislature of the State of New Mexico ("**Legislature**") for the performance of this Agreement.
b. If the Legislature does not make sufficient appropriations and authorization, City of Santa Fe may immediately terminate this Agreement by giving Contractor written notice of such termination.
c. City of Santa Fe's decision as to whether sufficient appropriations are available shall be final and accepted by the Contractor. Contractor hereby waives any rights to assert an impairment of contract claim against the City of Santa Fe or the State of New Mexico in the event of immediate or Early Termination of this Agreement by the City of Santa Fe or the State Department of Finance and Administration."

XVII. REQUIRED TERMINATION CLAUSE

A. Grantee acknowledges and agrees to include the following termination clause in all contracts that are (i) funded in whole or part by funds made available under this Agreement and (ii) entered into after the effective date of this Agreement:

a. "This contract is funded in whole or in part by funds made available by the State of New Mexico ("**State**"). Should the State terminate its Agreement with City of Santa Fe, City of Santa Fe may terminate this contract immediately by providing Contractor written notice of such termination.
b. In the event of termination pursuant to this paragraph, City of Santa Fe's only liability to Contractor shall be for goods and services delivered and accepted prior to the termination date."

XVIII. COMPLIANCE WITH UNIFORM FUNDING CRITERIA

A. Throughout the term of this Agreement, Grantee shall:

a. Submit all reports of annual audits and agreed-upon procedures required by § 12-6-3(A)-(B), NMSA 1978 by the due dates established in § 2.2.2 NMAC, reports of which must be a public record pursuant to § 12-6-5(A), NMSA 1978 within forty-five (45) days of delivery to the State Auditor;
b. Have a duly adopted budget for the current fiscal year approved by its budgetary oversight agency (if any);
c. Timely submit all required financial reports to its budgetary oversight agency (if any); and
d. Use accounting methods and procedures consistent with Generally Accepted Accounting Principles and the State's Model Accounting Principals to expend the Appropriated Amount in accordance with applicable law and account for and safeguard Project funds and assets acquired with Project funds.

B. In the event Grantee fails to comply with the requirements of subparagraph A of this Article XVIII, Department may take one or more of the following actions:

a. Suspend new or further obligations pursuant to Article VI(A) of this Agreement;
b. Require the Grantee to develop and implement a written corrective action plan pursuant to Article VI(D) of this Agreement to remedy the non-compliance;
c. Impose special conditions to address the non-compliance by giving Grantee notice of such special conditions in accordance with Article III of this Agreement;
   i. The Parties agree that any special conditions imposed to address non-compliance shall be incorporated into this Agreement, through **Exhibit D**, upon notice to Grantee, without need for formal amendment of this Agreement;
   ii. Special conditions shall be binding and effective on the date that notice is deemed to have been given pursuant to Article III or
d. Terminate this Agreement pursuant to Article V(A) of this Agreement.

XIX. SEVERANCE TAX AND GENERAL OBLIGATION BONDS

A. Grantee acknowledges and agrees that the underlying appropriation for the Project may originate from the issuance of tax-exempt severance tax bonds or general obligation bonds by the State. Proceeds from such bonds are administered by the New Mexico State Board of Finance ("**SBOF**"), an entity separate and distinct from the Department.

a. Grantee acknowledges and agrees:
   i. It is Grantee's responsibility to determine through SBOF what (if any) conditions are currently imposed on the Project;
   ii. Department's failure to inform Grantee of an SBOF-imposed condition does not affect the validity or enforceability of the condition;
   iii. The SBOF may in the future impose further or different conditions upon the Project;
   iv. All SBOF conditions are attached to the Project and Appropriation Amount without the need for formal amendment of this Agreement;
   v. All applicable SBOF conditions must be satisfied before the SBOF will release to the Department funds subject to the condition(s) and
   vi. The Department's obligation to reimburse Grantee from the Project is expressly contingent upon the satisfaction of the then-current SBOF conditions.

B. Grantee acknowledges and agrees SBOF may, at its sole and absolute discretion, require reimbursement or remove eligibility for bond proceeds for the Project if the Project doesn't proceed sufficiently.

a. Grantee must comply with the requirement to encumber five percent (5%) of Project funds within six months of bond issuance as certified by Grantee in the Bond Questionnaire and Certification documents submitted to the SBOF.
b. Failure to comply may result in the reassignment of the bond proceeds. Upon reassignment of bond proceeds, this Agreement will be suspended until the entity has demonstrated readiness as determined by the SBOF and the Department.

C. Grantee acknowledges and agrees that this Agreement is subject to the SBOF's Bond Project Disbursements rule, § 2.61.6, NMAC, as may be amended from time to time or re-codified.

XX. GENERAL PROVISIONS

A. Assignment: Grantee's rights and obligations under this Agreement are personal and may not be transferred or assigned without the prior written consent of the State. Any attempt at assignment or transfer

without such consent shall be void. Any assignment or transfer of Grantee's rights and obligations approved by the State shall be subject to the provisions of this Agreement.

B. Subcontractors: Grantee shall not enter any subgrant or subcontract in connection with its obligations under this Agreement without the prior written approval of the State. Upon request, Grantee shall submit to the Department a copy of each such subgrant or subcontract.

C. Binding Effect: Except as otherwise provided, all provisions of this Agreement, including the benefits and burdens, shall extend to and be binding upon the Parties' respective successors and assigns.

D. Authority: Each Party represents and warrants to the other that the execution and delivery of this Agreement and the performance of such Party's obligations have been duly authorized.

E. Captions and References: The captions and headings in this Agreement are for the convenience of reference only and shall not be used to interpret, define, or limit its provisions. All references in this Agreement to sections (whether spelled out or using the § symbol), subsections, exhibits, or other attachments are references to sections, subsections, exhibits, or other attachments contained herein or incorporated as a part hereof, unless otherwise noted.

F. Counterparts: This Agreement may be executed in multiple, identical, original counterparts, each of which shall be deemed to be an original, but all of which, taken together, shall constitute the same agreement.

G. Digital Signatures: If any signatory signs this agreement using a digital signature in accordance with the State Policies regarding the use of digital signatures, then any agreement or consent to use digital signatures within the electronic system through which that signatory signed shall be incorporated into this Agreement by reference.

H. Modification: Except as otherwise provided in this Agreement, any modification to this Agreement shall only be effective if agreed to in a formal amendment, properly executed and approved in accordance with applicable New Mexico law and State fiscal policies and rules. Modifications permitted under this Agreement, other than Agreement amendments, shall conform to the policies issued by the State.

I. Statutes, Regulations, Fiscal Rules, and Other Authority: Any reference in this Agreement to a statute, regulation, policy, or other authority shall be interpreted to refer to such authority then current, as may have been changed or amended after the Effective Date of this Agreement.

J. External Terms and Conditions: Notwithstanding anything to the contrary herein, the State shall not be subject to any provision included in any terms, conditions, or agreements appearing on Grantee's or a subcontractor's website or any provision incorporated into any click-through or online agreements related to the Work unless that provision is specifically referenced in this Agreement.

K. Severability: The invalidity or unenforceability of any provision of this Agreement shall not affect the validity or enforceability of any other provision of this Agreement, which shall remain in full force and effect, provided that the Parties can continue to perform their obligations under this Agreement in accordance with its intent.

L. Survival of Certain Agreement Terms: Any provision of this Agreement that imposes an obligation on a Party after the termination or expiration of this Agreement shall survive the termination or expiration of this Agreement and shall be enforceable by the other Party.

M. Third-Party Beneficiaries: Except for the Parties' respective successors and assigns described in this Agreement, it does not and is not intended to confer any rights or remedies upon any person or entity other than the Parties. Enforcement of this Agreement and all rights and obligations hereunder are reserved solely to the Parties. Any services or benefits that third parties receive as a result of this Agreement are incidental to this Agreement and do not create any rights for such third parties.

N. Waiver: A Party's failure or delay in exercising any right, power, or privilege under this Agreement, whether explicit or by lack of enforcement, shall not operate as a waiver, nor shall any single or partial exercise of any right, power, or privilege preclude any other or further exercise of such right, power, or privilege.

O. Standard and Manner of Performance: Grantee shall perform its obligations under this Agreement in accordance with the highest standards of care, skill, and diligence in Grantee's industry, trade, or profession.

P. Licenses, Permits, and Other Authorizations: Grantee shall secure, prior to the Effective Date, and maintain at all times during the term of this Agreement, at its sole expense, all licenses, certifications, permits, and other authorizations required to perform its obligations under this Agreement and shall ensure that all employees, agents, and subcontractors secure and maintain at all times during the term of their employment, agency or subcontractor, all license, certifications, permits and other authorizations required to perform their obligations in relation to this Agreement.

Q. Publicity: Any Publicity regarding the subject matter of this Agreement may not be released without prior written approval from the Department. For purposes of this agreement, "**Publicity**" means notices, informational pamphlets, press releases, email responses, research, reports, signs, and similar public notices prepared by or for the Grantee or jointly with others.

a. Grantee shall obtain written approval prior to issuing any press release or making any public announcement regarding this agreement. Grantee agrees to obtain approval of the Department in advance with respect to all Public Relations, all communications with media, or all communications with any other member of the public with respect to this agreement, except to acknowledge that an agreement does exist.
b. For purposes of this agreement, "Public Relations" includes community relations and means those activities dedicated to maintaining the Department's image or maintaining or promoting understanding and favorable relations with the community or public at large or any segment of the public.
c. Violations of either Article XX (Q)(a) or (b) shall constitute a material Breach of Agreement.

R. Data Sharing: The State intends to secure and collate specific data generated by Grantee under this Agreement to use in support of the State's organizational, policy-making, and management of public resource functions. State, in accordance with **Exhibit E**, attached hereto and incorporated herein by reference, reserves the right to require Grantee and/or its subcontractors to provide specific data relevant to the above-listed functions. Data provided by Grantee may be incorporated into existing or future developed State integrated analysis tools or databases, including but not limited to geographic information system (GIS) networks and databases accessible by the public. Dissemination of data collected may include historical data and projections based on such historical data.

a. To the extent any data transferred as part of this Agreement is legally determined to be the property of Subrecipient or its subcontractors, Subrecipient and/or its subcontractors grants State a

nonexclusive, fully paid-up right and license to reproduce, use, distribute, do derivative works based on, and archive data transferred as part of this Agreement.

S. Venue and Choice of Law: This Agreement shall be governed by and construed in accordance with the laws of the State of New Mexico, without regard to any conflict of law provisions. Any legal suit, action, or proceeding arising out of or related to this Agreement shall be instituted exclusively in the district courts located in Santa Fe, New Mexico. The Parties hereby irrevocably submit to the exclusive jurisdiction and venue of such courts in any such suit, action, or proceeding. The Parties waive any objection to the laying of the venue of any such suit, action, or proceeding in the district courts of Santa Fe, New Mexico, and irrevocably waive and agree not to plead or claim in any such court that any such suit, action, or proceeding brought in any such court has been brought in an inconvenient forum.

[SIGNATURE PAGE AND EXHIBITS FOLLOW]
[THIS SPACE LEFT BLANK INTENTIONALLY]

IN WITNESS WHEREOF, the parties have duly executed this Agreement as of the Department's date of execution.

APPROVED BY AGING AND LONG-TERM DIVISION (ALTSD):

SPONSOR: or Designee
By:_____
Title:_____ Date:_____

Office of Secretary: or Designee
By:_____
Title:_____ Date:_____

Chief Financial Officer: or Designee
By:_____
Title:_____ Date:_____

Chief Procurement Officer: or Designee
By:_____
Title:_____ Date:_____

AS TO LEGAL FORM AND SUFFICIENCY (ALTSD)

General Counsel's Office: or Designee
By:_____
Title:_____ Date:_____

APPROVED BY GRANTEE:

GRANTEE: By:_____

Name Title:_____ Date:_____

GRANTEE: By:_____

Name Title:_____ Date:_____

GRANTEE: By: Sarah Piltch
Sarah Piltch (Jan 9, 2026 16:40:27 MST)

Name Sarah Piltch Title: Assistant City Attorney Date: Jan 9, 2026

GRANTEE: By:_____

Legal Counsel Title:_____ Date:_____

EXHIBIT A
Notice of Department's Obligation Form

NOTICE OF OBLIGATION TO REIMBURSE GRANTEE

Notice of Obligation to Reimburse Grantee [# _____]

DATE: _____

TO: Department Representative: **AGING & LONG-TERM SERVICES DEPARTMENT**

FROM: Grantee: _____ Grantee Official Representative:_____

Grantee Address:_____

Name of Senior Center:_____

SUBJECT: Notice of Obligation to Reimburse Grantee

Grant Number:_____

Grant Termination Date:_____

As the designated representative of the Department for Grant Agreement number_____entered into between the Grantee and the Department, I certify that the Grantee has submitted to the Department the following third-party obligation executed, in writing, by the third party's authorized representative:

Vendor or Contractor:_____

Third Party Obligation Amount: _____

Vendor or Contractor:_____

Third Party Obligation Amount: _____

Vendor or Contractor:_____

Third Party Obligation Amount: _____

I certify that the State is issuing this Notice of Obligation to Reimburse Grantee for permissible purposes within The scope of the project description, subject to all the terms and conditions of the above-referenced Grant Agreement.

Grant Amount (Minus AIPP if applicable): $_____

The Amount of this Notice of Obligation: $_____

The Total Amount of all Previously Issued Notices of Obligation: $_____

The Total Amount of all Notices of Obligation to Date: $_____

Note: Contract amounts may exceed the total grant amount, but the invoices paid by the grant will not exceed the grant amount.

Department Rep. Approver:_____Title:_____

Signature:_____Date:_____

Please ensure that all estimates and/or quotes are included with the Notice of Obligation (NOO).

Administrative and/or Indirect Cost – generally, the legislation authorizing the issuance of bonds prohibits the use of its proceeds for indirect expenses (e.g. penalty fees or damages other than pay for work performed, attorney fees, and administrative fees). Such use of bond proceeds shall not be allowed unless specifically authorized by statute.

NOO Revised: 10-14-2025 PLEASE SUBMIT TO: capital.outlay@altsd.nm.gov

EXHIBIT B
Request for Payment Form and Certification

STATE OF NEW MEXICO
CAPITAL GRANT PROJECT
Request for Payment Form
Exhibit 1

I. Grantee Information

(Make sure information is complete & accurate)

A. Grantee: _____

B. Senior Center (Name): _____

C. Street Address: _____
(Complete Mailing, including Suite, if applicable)

_____
City State Zip

D. Phone No: _____

E. Grant No: _____

F. Grant Expiration Date: _____

II. Payment Computation

A. Payment Request No. _____

B. Grant Amount: _____

C. AIPP Amount *(If Applicable)*: _____

D. Funds Requested to Date: _____

E.

Date of Invoice	Vendor Name	Amount of Invoice	Amount Applicable to this Grant
Amount Requested this Payment:			

F. Reversion Amount *(If Applicable)*: _____

G. Grant Balance: _____

H. ☐ GF ☐ GOB ☐ STB *(attach wire if first draw)*

I. ☐ Final Request for Payment *(if Applicable)*

III. Fiscal Year : _____
(The State of NM Fiscal Year is July 1, 20XX through June 30, 20XX of the following year)

IV. ☐ **Reporting Certification:** I hereby certify to the best of my knowledge and belief, that database reporting is up to date; to include the accuracy of expenditures and grant balance, project status, project phase, achievements and milestones; and in compliance with Article VIII of the Capital Outlay Grant Agreement.

V. ☐ **Compliance Certification:** Under penalty of law, I hereby certify to the best of my knowledge and belief, the above information is correct; expenditures are properly documented, and are valid expenditures or actual receipts; and that the grant activity is in full compliance with Article IX, Sec. 14 of the New Mexico Constitution known as the "anti donation" clause.

_____
Grantee Fiscal Officer
or Fiscal Agent *(if applicable)*

_____
Printed Name

Date: _____

_____
Grantee Representative

_____
Printed Name

Date: _____

(State Agency Use Only)

Vendor: _____ **Fund No.:** _____ **Loc No.:** _____

I certify that the State Agency financial and vendor file information agree with the above submitted information.

_____ _____
ALTSD Capital Outlay Bureau Chief **Date**

_____ _____
ALTSD Capital Outlay Fiscal Coordinator **Date**

PLEASE SUBMIT TO: capital.outlay@altsd.nm.gov

GRANTEE REQUEST FOR PAYMENT (RFP) CHECKLIST

RFPs **MUST** be submitted as soon as grantee payment has cleared.

____ RFP # _____ (Verify that you are submitting the correct RFP #)

____ A-Code _____ (Verify that you are requesting payment for the correct grant #)

____ Verify $ amount on the RFP corresponds with the total amount of all invoices and proof of payment (i.e., canceled check, credit card receipt)?

____ Did you include the grant expiration date, and is it a valid date?

____ Has CPMS been updated within the current quarter of RFP submittal?

1st Quarter	July 1 – September 30
2nd Quarter	October 1 – December 31
3rd Quarter	January 1 – March 31
4th Quarter	April 1 – June 30

____ Verify that "Amount of invoice" and "Amount applicable to this Grant" are correct. (For example, if an invoice is for $100.00 but only $50.00 applies to the grant, ensure this is correctly captured on the RFP).

Example:

Date of Invoice	Vendor Name	Amount of Invoice	Amount Applicable to this Grant
6/10/2025	ABC construction	$100.00	$50.00
E	X A M P	L E	
Amount Requested this Payment:			$50.00

Are the following required documents included?

RFPs for equipment, construction, and vehicles

___ Invoice (All PRs)

___ Proof of payment (canceled check/ACH payment) (All PRs)

___ Grantee PO (All PRs)

___ Approved NOO

Additional supporting documents for Vehicles (all the above and the following):

___ Certificate of Origin (all the above and PRs for Vehicles)

___ Odometer Disclosure

___ Buyers' Agreement

Please ensure VINs on all supporting documents match.

NOTE: Be advised that 85% of grant funds must be spent 6 months prior to the reversion date.

This is for your use only DO NOT submit with RFP

EXHIBIT C
Quarterly Reports Form and Certification

OPTIONAL EXHIBIT D
SPECIAL CONDITIONS

The capital outlay oversight requires grantees' accounting methods and procedures, including their internal control framework, to be scrutinized, so as to safeguard State capital outlay appropriations and assets acquired with such appropriations.

This Capital Outlay Special Grant Condition(s) **Exhibit D** is necessary pursuant to Executive Order 2013-006 (2.A.2.a-c, if applicable), due to the Grantees' material weaknesses, significant deficiencies, or findings that raised concerns as to the ability to expend grant funds in accordance with applicable law in the organization's FY 2022 audit. The Special Conditions identified below apply to the authorized agent, North Central New Mexico Economic Development District (NCNMEDD).

Procurement - All purchases or contracts the Grantee enters that shall use funding from the Department capital appropriations grant must be approved by the Department prior to the initiation of implementing purchasing documents. The Grantee shall receive such prior approval via official correspondence from the Department, which may be through letter or email. The Grantee shall submit the following to the Department in pursuit of prior approval: purchasing policies and procedures, CFO certification, documentation of management and program approval, policies and procedures governing purchasing and contracting, a copy of the current procurement and contracting policies, and documentation regarding informing staff responsible for purchasing and contracting on such policies and procedures.

Budget - Provide documentation of approval of your current budget from DFA Local Government or other authoritative agency. Provide policies and procedures on who is responsible for and how annual budgets (expenditures and revenue) are established, monitored and adjusted. Provide a corrective action plan on how budget issues identified in your audit will be/have been addressed. Also include documentation on how staff responsible for budgeting is informed on budget policies and procedures.

Capital Assets - Provide a complete list of inventory including inventory control numbers and current location. Provide policies and procedures on capital assets and inventory and specify how the proposed purchased items will be included, tagged, and tracked in capital asset inventory. Also include documentation on how staff responsible for capital assets is informed on capital asset policies and procedures.

Travel and Per Diem - Provide policies and procedures on travel and per diem. Also include how staff who travel and those responsible for travel reimbursement are informed on travel and per diem policies and procedures.

Timely Audits – Provide policies and procedures on annual audits. Provide documentation on how and who is responsible for insuring that annual audits are completed timely. Also include documentation on how staff responsible for the annual audit is informed on audit policies and procedures.

Cash Management – policies and procedures on cash management of federal funds. Provide procedures used to draw and disburse federal funds. Provide procedures to reconcile draw amounts, deposits and disbursements; and to prepare federal cash reporting documents to ensure compliance with federal regulations.

The Grantee was required to, and has provided sufficient documentation regarding "funds may not be released until ALTSD, and its legal counsel has reviewed audits and the approved agreement identifying a fiscal agent", as referenced in the Grantee's 2022 and 2023 Audit files. Therefore, the criteria to enter into this agreement have been met.

EXHIBIT E
Data Sharing Provisions

A22-G5353 Mary Esther Gonzales Senior Center - City of Santa Fe - Draft COGA (1)

Final Audit Report 2026-01-09

Created:	2026-01-09
By:	MATTHEW HARDING (mrharding@santafenm.gov)
Status:	Signed
Transaction ID:	CBJCHBCAABAAL5FOvkZBIsFZxijI8yjIOwQ_T0A4ynEN

"A22-G5353 Mary Esther Gonzales Senior Center - City of Santa Fe - Draft COGA (1)" History

Document created by MATTHEW HARDING (mrharding@santafenm.gov)
2026-01-09 - 10:54:48 PM GMT- IP address: 63.232.20.2

Document emailed to scpiltch@santafenm.gov for signature
2026-01-09 - 10:55:37 PM GMT

Email viewed by scpiltch@santafenm.gov
2026-01-09 - 11:39:24 PM GMT- IP address: 174.28.46.116

Signer scpiltch@santafenm.gov entered name at signing as Sarah Piltch
2026-01-09 - 11:40:25 PM GMT- IP address: 174.28.46.116

Document e-signed by Sarah Piltch (scpiltch@santafenm.gov)
Signature Date: 2026-01-09 - 11:40:27 PM GMT - Time Source: server- IP address: 174.28.46.116

Agreement completed.
2026-01-09 - 11:40:27 PM GMT

Powered by Adobe Acrobat Sign

City of Santa Fe New Mexico

Finance Department

Project Ledger Request Form

Date of Request: 12/19/2025

Project Title: NM ALTSD Capital Appropriation A22-G5353

Project Type: ☐ CIP ☑ Grant ☐ Internal Tracking

Project ID: SSD2634501

Grant ID: S2640

Approved By: BG 12.30.25 Erika Lujan 1/2/26

(Finance Use Only)

Department: Community Services/Seniors Project Manager: Manuel Sanchez Ext: 4710

Project Date Range: Effective Date to 06/30/2026 ☑ Create Fixed Asset

---

☐ Multi-Funding (complete all funding sources, should equal 100%)

Funding Source: New Mexico Agency on Aging % of Funding: 100%

MUNIS ORG: 3459981 MUNIS OBJ: 490240 Awarded Amount: $235,630.00

Funding Source: _____ % of Funding: _____

MUNIS ORG: _____ MUNIS OBJ: _____ Awarded Amount: _____

Expense String Phase:

A project must have at least one phase identified, this can be used as an additional level of tracking, for example, CIP - Design, Construction, etc. For Grants can be used as reimbursable types, such as transportation, salaries.

(You can create more than one phase and you can default MUNIS ORGs and OBJs, optional)

Phase: 1 MUNIS ORG: 3459981 MUNIS OBJ: 570500

Grants Only (list all grants if applicable):

Grantor Name: NM State Aging & Long-Term Services Department (NMAOA) Awarded Amount: $235,630.00

AR Charge Code: 3459981.490240 ☐ Grant funds multiple projects (Complete a form for each project)

Grantor Id: A22-G5353 Federal CFDA (if applicable): _____

Grantor Name: _____ Awarded Amount: _____

AR Charge Code: _____ ☐ Grant funds multiple projects (Complete a form for each project)

Grantor Id: _____ Federal CFDA (if applicable): _____

(If grants please provide all grant award documents with form) ☑ Attached Grant Documentation

Log # *{Finance use only}*:	
Journal # *{Finance use only}*:	

City of Santa Fe, New Mexico
BUDGET AMENDMENT RESOLUTION (BAR)

DEPARTMENT / DIVISION NAME	DATE
Community Services/Senior Services	1/13/2025

ITEM DESCRIPTION	ORG	OBJECT	PROJECT	INCREASE	DECREASE
EXPENDITURES				*{enter as positive #}*	*{enter as negative #}*
Equipment & Machinery Non-Exempt	3459981	570500	SSD2634501	235,630.00	
REVENUES				*{enter as negative #}*	*{enter as positive #}*
NM Agency on Aging	3459981	490240	SSD2634501	(235,630)	
				0	0

JUSTIFICATION: *(use additional page if needed)*
--Attach supporting documentation/memo

State of New Mexico Aging and Long Term Servies Capital Outlay Grant Agreement Capital Appropriation Project A22-G5353

{Complete section below if BAR results in a net change to ANY Fund}	
Fund(s) Affected	Fund Balance Increase/(Decrease)
TOTAL:	**0**

Theresa Trujillo — Prepared By *{print name}* — 1/13/2025 Date

Manuel Sanchez — Manuel Sanchez (Jan 14, 2026 11:59:21 MST) — Jan 14, 2026 — Division Director Signature *{optional}* — Date

Manuel Sanchez — Manuel Sanchez (Jan 14, 2026 11:59:21 MST) — Jan 14, 2026 — Department Director Signature — Date

{Use this form for Finance Committee/ City Council agenda items ONLY}

CITY COUNCIL APPROVAL

City Council Approval Date

Agenda Item #:

Andy Hopkins — Budget Officer — Date

Andrea Phillips, Interim Finance Director/Deputy Ch — Finance Director *{≤ $5,000}* — Date

City Manager *{≤ $60,000}* — Date

Signature: ERIKA LUJAN
ERIKA LUJAN (Jan 15, 2026 09:27:00 MST)

Email: evlujan@santafenm.gov

Signature: Andy Hopkins

Email: ajhopkins@santafenm.gov

Signature:
ANDREA PHILLIPS (Jan 15, 2026 13:25:56 MST)

Email: akphillips@santafenm.gov

CITY OF SANTA FE

Date: January 12, 2026

To: Governing Body, Finance Committee, and Quality of Life Committee

To: Grants

From: Manuel Sanchez, Senior Services Division Director/Interim Community Services Department Director Manuel Sanchez Manuel Sanchez (Jan 12, 2026 15:22:10 MST)

Subject: New Mexico Capital Outlay Grant Agreement A22-G5354 (Pasa Tiempo)

Vendor Name: NM Aging and Long-Term Services Department (ALTSD)

Munis Vendor Number: 6170

ITEM AND ISSUE:

Community Health & Safety Department/Senior Services Division respectfully requests your review and approval of a NM Capital Outlay Grant Agreement Capital Appropriation Project A22-5354 in the total amount of $65,805.00 not to exceed for the purchase and installation of meals equipment and other equipment for the Mary Esther Gonzales senior center for a term of June 30, 2026 with New Mexico Aging and Long-Term Services Department.

BACKGROUND AND SUMMARY:

The Senior Services Division is requesting the approval of the State of New Mexico ALTSD FY26 New Mexico Capital Outlay Agreement Capital Appropriation Project A22-G5354 to purchase and install meals equipment and other equipment for the Pasa Tiempo senior center. The attached Agreement reflects the Fiscal Year 2026 awarded appropriations of $65,805.00. Furthermore, this grant is funded at 100% State dollars which will subsidize the City's general fund account for its intended purpose.

PRIOR APPROVALS AND SUPPORTING INFORMATION:

FUNDING SOURCE:

Fund Name/Number: CIP Community Development / 345

Munis Org Name/Number: NM Agency on Aging / 490240
Seniors/Comm Dev CIP / 3459981

Munis Object Name/Number: Equipment & Machinery Non-Exempt / 570500

Budget Officer / Designee: _____ **Date:** _____

Budget Officer Comment/Exceptions: _____

PROCUREMENT METHOD:

The procurement method used was Choose an item.

Chief Procurement Officer (CPO)/Designee: _____ **Date:** _____

CPO Comment/Exceptions: _____

ASSOCIATED APPROVALS:

IT Components included? ☐ **Yes** | ☒ **No**

Approval: _____ **Title:** _____ **Date:** _____

Comment/Exceptions: _____

Treasury/Point of Sale Components included? ☐ **Yes** | ☒ **No**

Approval: _____ **Title:** _____ **Date:** _____

Comment/Exceptions: _____

Vehicles included? ☐ **Yes** | ☒ **No**

Approval: _____ **Title:** _____ **Date:** _____

Comment/Exceptions: _____

Construction to City Facilities, Furniture, and/or Fixtures included? ☐ **Yes** | ☒ **No**

Approval: _____ **Title:** _____ **Date:** _____

Comment/Exceptions: _____

Is this an externally funded purchase? ☒ **Yes** | ☐ **No**

If yes, what is the issuing agency: NM Agency on Aging

Approval: **Title:** _____ **Date:** _____

Comment/Exceptions: _____

Is this a Capital Asset or Project? ☒ **Yes** | ☐ **No**

Project Ledger Number: SSD2634502

Approval: Erika Lujan **Title:** _____ **Date:** _____

Comment/Exceptions: _____

ATTACHMENTS:

Grant Agreement A22-G5354 (Pasa Tiempo)

Project Ledger Request Form

BAR

NEW MEXICO CAPITAL OUTLAY GRANT AGREEMENT
CAPITAL APPROPRIATION PROJECT

THIS AGREEMENT is made and entered into by and between the State of New Mexico, AGING AND LONG-TERM SERVICES DEPARTMENT, 2550 Cerrillos Road, Santa Fe, NM 87505, ("**Department**") and City of Santa Fe, ("**Grantee**") (individually "**Party**" and collectively "**Parties**"). This Agreement shall be effective as of the date the Department executes it ("**Effective Date**").

WITNESSETH

WHEREAS, in the Laws of 2022, Chapter 55, Section 10, Subsection A, Paragraph 55, the Legislature made an appropriation to the Department, funds from which the Department is making available to the Grantee pursuant to this Agreement; and

WHEREAS, the Department is granting to Grantee, and the Grantee is accepting the grant of funds from this appropriation, in accordance with the terms and conditions of this Agreement;

NOW, THEREFORE, in consideration of the mutual covenants and obligations contained herein, the parties hereby mutually agree as follows:

AGREEMENT

I. PROJECT DESCRIPTION, GRANT AMOUNT, AND REVERSION

A. A22-G5354 ("**Project**") June 30,2026 ("**Reversion Date**"). Laws of 2022, Chapter 55, Section 10, Subsection A, Paragraph 55, sixty-five thousand eight hundred five dollars $65,805, to purchase and install meals equipment and other equipment for the Pasatiempo senior center in Santa Fe in Santa Fe county.

B. Grantee's total reimbursements shall not exceed sixty-five thousand eight hundred five dollars $65,805 ("**Appropriation Amount**") minus the allocation for Art in Public Places ("**AIPP amount**"), if applicable, zero dollars, $0 which equals sixty-five thousand eight hundred five dollars, $65,805 ("**Adjusted Appropriation Amount**").

C. In the event of a conflict among the Appropriation Amount, the Reversion Date, as defined herein and/or the purpose of the Project, as set forth in this Agreement, and the corresponding appropriation language in the laws cited above in this Article I, the language of the laws cited herein shall control.

The information contained in Article I is referred to collectively as the "**Project Description.**"

II. DISBURSEMENT LIMITATION

A. Upon the Effective Date, the Grantee shall submit to the Department a comprehensive procurement plan and expenditure plan, detailing a Project timeline with milestones, required procurements, and identifying expected expenditures per milestone (collectively, "**Project Budget**"). The Department shall review and approve the Project Budget by issuing a Notice of Department's Obligation ("**Notice of Obligation**"), in accordance with the Project Description, a sample of which is attached hereto as **Exhibit A** and incorporated herein by reference. After receipt of a Notice of Obligation, the Grantee may be reimbursed for allowable costs up to the Adjusted Appropriation Amount. This Agreement and any reimbursements up to the Adjusted Appropriation Amount are expressly conditioned upon the following:

a. Irrespective of any Notice of Obligation, Grantee's expenditures shall be made in accordance with the Project Budget, on or before the Reversion Date and/or, if applicable, any Early Termination Date; and
b. The total amount received by Grantee shall not exceed the lesser of:
   i. the Adjusted Appropriation Amount identified in Article I (B) herein; or
   ii. the total of all amounts stated in the Notice(s) of Obligation evidencing the Department has received and accepted Grantee's Third-Party Obligation(s); and
c. Grantee's expenditures are made and accounted for pursuant to the State Procurement Code, State's Model Accounting Practices, and execution of binding written obligations or purchase orders with third-party contractors or vendors for the provision of services, including professional services, or the purchase of tangible personal property and real property for the Project ("**Third-Party Obligations**"); and
d. Grantee's submittal of timely Requests for Payment and supporting documentation in accordance with the procedures set forth in this Agreement; and
e. In the event capital assets acquired with Project funds are to be sold, leased, or licensed to or operated by a private entity, the sale, lease, license, or operating agreement:
   i. must be approved by the applicable oversight entity (if any) in accordance with §§ 13-6-2, 13-6-2.1, and 13-6-3; or
   ii. If no oversight entity is required to approve the transaction, the Department of Finance and Administration's Infrastructure Planning Development Division (IPDD) must approve it as complying with the law.

B. Prior to the sale, lease, license, or operating agreement being approved pursuant to Articles II(A)(e) (i) or (ii) herein, the Department may, in its sole and absolute discretion, unless inconsistent with State Board of Finance imposed conditions, reimburse Grantee for necessary expenditures incurred to develop the Project sufficiently to make the sale, lease, license, or operating agreement commercially feasible, limited to planning and design expenditures; and

C. Grantee's submission of documentation of all Third-Party Obligations and amendments thereto (including terminations) to the Department and the Department's issuance of a Notice of Obligation for a particular amount in accordance with the terms of this Agreement shall be governed by the following:

a. Grantee is authorized to budget the particular amount set forth in the Notice of Obligation, execute the Third-Party Obligation, and request the Third-Party to begin work after issuance of a Notice of Obligation by the Department.
b. Grantee acknowledges and agrees that any Third-Party Obligations agreed to prior to receiving a Notice of Obligation are its sole responsibility.
c. Grantee shall submit to the Department one copy of all Third-Party Obligations and amendments thereto (including terminations) as soon as possible after execution by the Third-Party but prior to execution by the Grantee.
d. Department may, in its sole and absolute discretion, issue a Notice of Obligation for the particular amount of a Third-Party Obligation that only obligates the Department to reimburse Grantee's expenditures made on or before the Reversion Date or an Early Termination Date. The current Notice of Obligation form is incorporated herein and attached hereto as Exhibit 2.

D. Grantee shall provide all necessary qualified personnel, materials, and facilities to implement the Project. The Grantee shall finance its share (if any) of the costs of the Project, including all Project overruns.

E. Prior to entering into this Agreement, the Department conducted a risk assessment on the Grantee and a project readiness review for the Project. In accordance with State Model Accounting Practices, FIN

9.2, if the Department determines that the expenditure of Project funds by the Grantee requires special conditions, those conditions are identified and listed in **Exhibit D**, which is attached and incorporated by reference. The Parties agree that, to the extent the Department, in its sole and absolute discretion, determines additional special conditions are necessary or that existing special conditions are no longer required, it may update **Exhibit D** from time to time without the need for a formal amendment of this Agreement.

F. Project funds shall not be used for purposes other than those authorized by the Department in accordance with the Project Description.

G. Project funds cannot be used to reimburse the Grantee for indirect Project costs unless specifically allowed by law.

III. NOTICES

The following provisions shall apply whenever written notices, including written decisions, are to be given or received related to this Agreement.

A. The Grantee designates the person(s) listed below, or their successor, as their official representative(s) concerning all matters related to this Agreement:

a. Grantee: City of Santa Fe
   i. Name: Manuel Sanchez
   ii. Title: Senior Services Director
   iii. Address: 1121 Alto St, Santa Fe, NM 87501
   iv. Email: mnsanchez@santafenm.gov
   v. Telephone: 505.955.4710

B. The Grantee designates the person(s) listed below, or their successor, as their Fiscal Officer or Fiscal Agent concerning all matters related to this Agreement:

a. Grantee: City of Santa Fe
   i. Name: Brittany Gurule
   ii. Title: Accounting Financial Analyst
   iii. Address: PO Box 909, Santa Fe, NM 87504-0909
   iv. Email: bsgurule@santafenm.gov
   v. Telephone: 505.955.6130

C. The Department designates the persons listed below, or their successors, as the Points of Contact for matters related to this Agreement.

a. Department:
   i. Name: Tasha Martinez | Julia Richard
   ii. Title: Bureau Chief | Project Coordinator
   iii. Address: 2550 Cerrillos Road, Santa Fe, NM 87505
   iv. Email: tasha.martinez@altsd.nm.gov | julia.richard@altsd.nm.gov
   v. Telephone: 505.316.8900 | 505.629.7751

The Parties agree that all notices, including written decisions, related to this Agreement shall be sent to the persons named above by email or regular mail. For mailings, notices shall be deemed to have been given and received upon the date of the receiving party's actual receipt or five (5) calendar days after

mailing, whichever shall first occur. In the case of email transmissions, the notice shall be deemed to have been given and received on the date reflected on the delivery receipt of the email.

IV. TERM & DEADLINE TO EXPEND FUNDS

A. The term of this Agreement shall begin on the Effective Date and terminate on the 30th day of June during the calendar year of the Reversion Date unless Terminated Before Reversion Date ("**Early Termination**") pursuant to Article V herein (collectively "**Term**").

B. The Project's funds must be expended on or before the Reversion Date and, if applicable, the Early Termination Date of this Agreement.

a. For purposes of this Agreement, it is not sufficient for the Grantee to encumber the Project funds on its books on or before the Reversion Date or Early Termination Date.
b. For purposes of this Agreement, an expenditure of funds has occurred on the date the particular quantity of goods is delivered to and received by the Grantee, title to the goods is transferred to the Grantee, and/or as of the date particular services are rendered to and accepted by the Grantee.
c. For purposes of this Agreement, an encumbrance of funds pursuant to a contract or purchase order with a third-party does not qualify as an expenditure.

V. EARLY TERMINATION

A. General Provision. The Department may terminate this Agreement before the Reversion Date based on the Completion of the Project, Complete Expenditure of the Adjusted Appropriation, and/or Violation of this Agreement. Early Termination hereunder includes:

a. Termination due to completion of the Project before the Reversion Date;
b. Termination due to complete expenditure of the Adjusted Appropriation Amount before the Reversion Date;
c. Termination for violation of the terms of this Agreement; or
d. Termination for suspected mishandling of public funds, including but not limited to fraud, waste, abuse, and conflicts of interest.

B. Non-appropriation. This Agreement is expressly contingent upon the New Mexico State Legislature making sufficient appropriations and authorizations for the Project Description.

a. If the Legislature does not appropriate the Appropriation Amount, this Agreement shall terminate upon the Department giving the Grantee written notice of such termination. Such termination shall be effective as of the effective date of the law making the non-appropriation.
    i.The Department's decision as to whether sufficient appropriations or authorizations are available shall be final. Grantee hereby waives any rights to assert an impairment of contract claim against the State of New Mexico in the event of Early Termination of this Agreement.
b. As used herein, "non-appropriate" or "non-appropriation" includes the following actions by the New Mexico Legislature:
    i.Deauthorization, reauthorization, or revocation of a prior authorization.

C. Grant Disbursements in the Event of Early Termination. In the event of Early Termination, the Department's sole and absolute obligation to reimburse the Grantee is expressly conditioned upon the limitations set forth in Article II above.

D. Notice. Either Party may terminate this Agreement prior to the Reversion Date by providing the other Party with a minimum of fifteen (15) days advance written notice of the Early Termination. Grantee hereby waives any rights to assert an impairment of contract claim against the State of New Mexico in the event of Early Termination of this Agreement by the Department.

VI. SUSPENSION OF NEW OR FURTHER OBLIGATIONS

A. Department, in its sole and absolute discretion, may provide written notice to Grantee to suspend entering into further obligations. Upon the receipt of such written notice by the Grantee:

a. Grantee shall immediately suspend entering into new or further written obligations with third parties;
b. Department will suspend the issuance of any new or further Notice of Obligation under this Agreement; and
c. Department may direct the Grantee to implement a corrective action plan in accordance with Article VI (D) herein.

B. In the event of Suspension of this Agreement, the Department's sole and absolute obligation to reimburse the Grantee is expressly conditioned upon the limitations set forth in Article II herein.

C. A suspension of new or further obligations under this Agreement shall remain in effect unless or until the date the Grantee receives written notice given by the Department informing the Grantee that the Suspension has been lifted or that the Agreement has been Early Terminated in accordance with Article V herein. If the Suspension is lifted, the Department will consider further requests for a Notice of Obligation.

D. Corrective Action Plan in the Event of Suspension. Where the Department, in its sole and absolute discretion, directs Grantee to suspend entering into new or further written obligations with third parties pursuant to Article VI(A), the Department may, but is not obligated to, require the Grantee to develop and implement a written corrective action plan to remedy the grounds for the Suspension.

a. Such a corrective action plan must be approved by the Department and be signed by the Grantee.
b. Failure to sign a corrective action plan or meet the terms and deadlines set forth in the signed corrective action plan is hereby deemed a violation of the terms of this Agreement for purposes of Early Termination, Article V(A)(c).
c. A corrective action plan shall be in addition to, and not in lieu of, any other equitable or legal remedy authorized hereunder or at law, including but not limited to Early Termination.

VII. AMENDMENTS

Unless expressly stated otherwise herein, this Agreement shall not be altered, changed, or amended except by an instrument in writing duly executed by both parties hereto with the same formalities as this agreement.

VIII. REPORTING

A. Database Reporting

a. Grantee shall provide the Department with quarterly reports of Project activity, entering the required Project information directly into a database required by the Department.

b. Additionally, Grantee shall certify on each Request for Payment form, attached hereto as **Exhibit B** and incorporated herein, that all information provided in the database is true and accurate, updates to the database have been maintained, and all Project activity complies with applicable law and the terms of this Agreement

c. Grantee hereby acknowledges that failure to perform and/or certify updates to the database will jeopardize the reimbursement of funds. The Department shall give Grantee a minimum of fourteen (14) days' advance written notice of any changes to the information the Grantee is required to report.

d. At the Department's discretion, all reports required hereunder may be directed to and facilitated through an electronic database.

e. Quarterly reports shall be due on the last day of the month, that is, 30 days prior to the end of the quarter following the execution of this Agreement by the Department and ending during the quarter of the submission of the final request for reimbursement for the Project, or the following quarter. Quarterly reports shall be in the form required by **Exhibit C**, attached hereto and incorporated herein by reference.

B. Requests for Additional Information/Project Inspection

a. During the term of this Agreement and the Record Retention Period, the Department may:
   i. Request additional information regarding the Project as it deems necessary and
   ii. Conduct on-site inspections of the Project at reasonable times and upon reasonable notice.

b. Grantee shall respond to such requests for additional information within the time established by the Department.

IX. REQUEST FOR PAYMENT PROCEDURES

A. Grantee shall request payment by submitting the form attached hereto as **Exhibit B**. Payment requests are subject to the following procedures:

a. Each Request for Payment must be in accordance with the Project Budget and contain proof of payment by the Grantee or liabilities incurred by the Grantee.
   i. Proof of payment must demonstrate the validity of an expenditure or liabilities incurred by Grantee.
   ii. However, Grantee may be reimbursed for unpaid liabilities only if the Department, in its sole and absolute discretion, agrees to do so and in accordance with any special conditions imposed by the Department.

b. Obligated but unpaid invoices received by Grantee from third-party contractors or vendors may be reimbursed if the invoices comply with the provisions of this Agreement.
   i. The Grantee shall make payment to those contractors or vendors within five (5) business days from the date of receiving reimbursement from the Department or in a shorter period than the Department may prescribe in writing.
   ii. The Department reserves the right to make such payments directly to the contractors or vendors as a special condition under this Agreement.
   iii. The Grantee is required to certify to the Department proof of payment to the third-party contractor or vendor within five (5) business days from the date the Department reimburses the Grantee.

B. Until the Project is fully planned, designed, and all necessary procurements identified in the Project Budget are completed, Grantee's reimbursements will be limited to the planning, design, and procurement costs outlined in the Project Budget. Once the planning, designing, and procuring stages are complete, the Grantee must obligate at least ten percent (10%) of the Adjusted Appropriation Amount within one (1) year

and must have utilized at least eighty-five percent (85%) of the Adjusted Appropriation Amount six (6) months before the reversion date.

C. Deadlines. Grantee shall submit requests for Payments to the Department on the earlier of:

a. Immediately as Grantee receives them, but at a maximum of thirty (30) days from when Grantee incurred the expenditure or liability; or
b. The date of Early Termination or Reversion Date for expenditures or liabilities incurred before the Early Termination date or Reversion Date.

D. Grantee's failure to abide by the requirements set forth in Article II and Article IX herein may result in the denial of its Request for Payment. Department reserves the right to reject a payment request for the Project unless and until it is satisfied that the expenditures or liabilities are for permissible purposes within the meaning of the Project Description, identified within the Project Budget, and that the Grantee is otherwise in compliance with this Agreement.

a. Department's authority to reject any Request for Payment is in addition to, and not in lieu of, any other legal or equitable remedy available to the Department under this Agreement, at law, or in equity.

X. PROJECT CONDITIONS AND RESTRICTIONS

A. The following general conditions and restrictions shall apply to the Project:

a. The Project's funds must be spent in accordance with all applicable state laws, regulations, policies, and guidelines, including, but not limited to, the State Procurement Code.
b. The Project's expenditures and liabilities must be accounted for in accordance with the State's Model Accounting Practices, as amended from time to time.
c. The Project must be implemented in accordance with the New Mexico Public Works Minimum Wage Act, Section 13-4-10 through 13-4-17 NMSA 1978, as applicable.
d. The Project must provide a public benefit above and beyond any incidental benefit to private entities in accordance with applicable law, including, but not limited to, Article IX, Section 14 of the Constitution of the State of New Mexico.
e. Without prior written approval from the Department and State Board of Finance, for the useful life of any asset purchased under this Agreement, Grantee shall not convert any property acquired, built, renovated, repaired, designed, or developed with Project funds to uses other than those specified in the Project Description.
f. In addition to other remedies available at law or in equity, any disposal or conversion of property acquired, built, renovated, repaired, designed, or developed with Project funds without the Department's and the Board of Finance's express written approval will trigger the Département's right to reimbursement from Grantee of the Appropriated Amount, transfer proceeds from any disposition of property to the State, or otherwise provide consideration to the State for the Appropriated Amounts.
g. Grantee shall comply with all applicable federal and state laws, rules, and regulations pertaining to civil rights and equal employment opportunity.
h. In accordance with all such laws, rules, and regulations, the Grantee agrees to assure that no person shall, on the grounds of race, color, national origin, sex, sexual preference, age, or handicap, be excluded from participation in the Project, use of the Project, employment with Grantee, or

otherwise be denied benefits/subject to discrimination for any activity performed under this Agreement.

i. Where the Department, in its sole and absolute discretion, determines Grantee has failed to comply with the above conditions and restrictions, Grantee agrees to take appropriate steps to correct any deficiencies immediately. The Grantee's failure to implement such appropriate steps within a reasonable time, but no longer than thirty (30) days after notice from the Department, constitutes a breach of this Agreement and grounds for Early Termination.

XI. REPRESENTATIONS AND WARRANTIES

A. Reliance by Department.

a. Grantee expressly acknowledges that the Department relies on the representations and warranties made by Grantee in this Agreement. Grantee acknowledges that such representations and warranties are a material inducement for the Department to enter into this Agreement and provide the Appropriated Amount.

b. Grantee shall ensure all representations and warranties provided herein are true, accurate, and complete as of the date of the Effective Date and shall remain so throughout the Term of this Agreement. Grantee is responsible for promptly notifying the Department in writing of any changes or inaccuracies in the representations and warranties contained herein.

B. Grantee hereby represents and warrants the following:

a. Grantee has taken all necessary steps to attain the legal authority to receive and expend the Project's funds.

b. Grantee has duly authorized this Agreement, and the person executing it has authority to do so. Once executed by Grantee, this Agreement shall constitute a binding obligation of Grantee, enforceable according to its terms.

c. Grantee's obligations hereunder do not conflict with any law, ordinance, or resolution applicable to Grantee, Grantee's charter (if applicable), or any judgment or decree to which Grantee is subject.

d. Grantee has independently confirmed that the Project Description, including, but not limited to, the Appropriated Amount and Reversion Date, is consistent with the underlying appropriation in law.

e. Grantee's governing body has duly adopted or passed as an official act a resolution, motion, or similar action authorizing the person identified as the official representative of the Grantee to sign and submit Requests for Payment on behalf of Grantee.

f. Grantee will abide by New Mexico laws regarding conflicts of interest, governmental conduct, and whistleblower protection.

i. Grantee agrees explicitly none of its officers or employees or its designees or agents, no member of the governing body, and no other public official of Grantee who exercises any function or responsibility with respect to this Agreement, shall have any interest, direct or indirect, in any contract or subcontract, or the proceeds thereof, for the Project.

ii. Further, Grantee will require all of its contractors to incorporate the language set forth in this paragraph prohibiting conflicts of interest in all subcontracts.

g. No funds have been paid or will be paid, by or on behalf of the Grantee, to any person for influencing or attempting to influence an officer or employee of the State, any agency, or body in connection with the awarding of any Third-Party Obligation.

i. Grantee will require certifying language prohibiting lobbying to be included in the award documents for all subawards, including subcontracts, loans, and cooperative agreements.

C. Consequences of False or Misleading Representations. If any representation or warranty made by Grantee is found to be false or misleading, the Department shall have the right to exercise any or all of the following remedies:

a. **Termination of Agreement:** Department may terminate this Agreement immediately upon written notice to the Grantee.
b. **Repayment of Grant Funds:** Grantee shall repay all Appropriated Amounts disbursed under this Agreement, upon demand by the Department.
c. **Other Remedies:** Department may pursue any other remedies available at law or in equity.

D. Survival of Representations and Warranties. The representations and warranties made by the Grantee shall survive the Early Termination or expiration of this Agreement.

XII. PROJECT RECORDS

A. Grantee shall be strictly accountable for receipts and disbursements relating to the Project's funds. The Grantee shall follow generally accepted accounting principles and the State's Model Accounting Practices and, if feasible, maintain a separate bank account or fund with a separate organizational code to ensure separate budgeting and accounting of the funds.

B. For six (6) years following the Project's completion ("**Record Retention Period**"), Grantee shall maintain all Project-related records, including, but not limited to, all financial records, requests for proposals, invitations to bid, selection and award criteria, contracts and subcontracts, advertisements, minutes of pertinent meetings, as well as records sufficient to fully account for the amount and disposition of the Appropriated Amount from all sources budgeted for the Project, the purpose for which such funds were used, and such other records as the Department may prescribe.

C. Grantee shall make all Project records available to the Department, the Department's Independent Public Accountant, and the New Mexico State Auditor upon request. With respect to the funds that are the subject of this Agreement, if the State Auditor or the Department finds any funds were improperly expended, Grantee shall be required to reimburse the State all amounts found to be improperly expended.

XIII. IMPROPERLY REIMBURSED FUNDS

If the Department determines part or all of the Appropriation Amount was improperly reimbursed to Grantee, including but not limited to funds reimbursed to Grantee based upon fraud, mismanagement, misrepresentation, misuse, violation of law by the Grantee, after ten (10) days' notice to Grantee and the opportunity to return such funds to the Department, the Department may offset any funds due to Grantee from the State, until the Appropriation Amount is fully repaid.

XIV. LIABILITY

Neither Party shall be responsible for liability incurred as a result of the other Party's acts or omissions in connection with this Agreement. Any liability incurred in connection with this Agreement is subject to immunities and limitations of the New Mexico Tort Claims Act.

XV. SCOPE OF AGREEMENT

This Agreement constitutes the entire and exclusive agreement between the Parties concerning the subject matter hereof. The Agreement supersedes all prior or contemporaneous agreements, understandings, discussions, communications, and representations, written or verbal.

XVI. REQUIRED NON-APPROPRIATIONS CLAUSE

A. Grantee acknowledges and agrees to include a "non-appropriations" clause in all contracts between it and other parties that are (i) funded in whole or part by funds made available under this Agreement and (ii) entered into after the effective date of this Agreement that states:

a. "The terms of this Agreement are contingent upon sufficient appropriations and authorization being made by the Legislature of the State of New Mexico ("**Legislature**") for the performance of this Agreement.
b. If the Legislature does not make sufficient appropriations and authorization, City of Santa Fe may immediately terminate this Agreement by giving Contractor written notice of such termination.
c. City of Santa Fe's decision as to whether sufficient appropriations are available shall be final and accepted by the Contractor. Contractor hereby waives any rights to assert an impairment of contract claim against the City of Santa Fe or the State of New Mexico in the event of immediate or Early Termination of this Agreement by the City of Santa Fe or the State Department of Finance and Administration."

XVII. REQUIRED TERMINATION CLAUSE

A. Grantee acknowledges and agrees to include the following termination clause in all contracts that are (i) funded in whole or part by funds made available under this Agreement and (ii) entered into after the effective date of this Agreement:

a. "This contract is funded in whole or in part by funds made available by the State of New Mexico ("**State**"). Should the State terminate its Agreement with City of Santa Fe, City of Santa Fe may terminate this contract immediately by providing Contractor written notice of such termination.
b. In the event of termination pursuant to this paragraph, City of Santa Fe's only liability to Contractor shall be for goods and services delivered and accepted prior to the termination date."

XVIII. COMPLIANCE WITH UNIFORM FUNDING CRITERIA

A. Throughout the term of this Agreement, Grantee shall:

a. Submit all reports of annual audits and agreed-upon procedures required by § 12-6-3(A)-(B), NMSA 1978 by the due dates established in § 2.2.2 NMAC, reports of which must be a public record pursuant to § 12-6-5(A), NMSA 1978 within forty-five (45) days of delivery to the State Auditor;
b. Have a duly adopted budget for the current fiscal year approved by its budgetary oversight agency (if any);
c. Timely submit all required financial reports to its budgetary oversight agency (if any); and
d. Use accounting methods and procedures consistent with Generally Accepted Accounting Principles and the State's Model Accounting Principals to expend the Appropriated Amount in accordance with applicable law and account for and safeguard Project funds and assets acquired with Project funds.

B. In the event Grantee fails to comply with the requirements of subparagraph A of this Article XVIII, Department may take one or more of the following actions:

a. Suspend new or further obligations pursuant to Article VI(A) of this Agreement;
b. Require the Grantee to develop and implement a written corrective action plan pursuant to Article VI(D) of this Agreement to remedy the non-compliance;
c. Impose special conditions to address the non-compliance by giving Grantee notice of such special conditions in accordance with Article III of this Agreement;
   i. The Parties agree that any special conditions imposed to address non-compliance shall be incorporated into this Agreement, through **Exhibit D**, upon notice to Grantee, without need for formal amendment of this Agreement;
   ii. Special conditions shall be binding and effective on the date that notice is deemed to have been given pursuant to Article III or
d. Terminate this Agreement pursuant to Article V(A) of this Agreement.

XIX. SEVERANCE TAX AND GENERAL OBLIGATION BONDS

A. Grantee acknowledges and agrees that the underlying appropriation for the Project may originate from the issuance of tax-exempt severance tax bonds or general obligation bonds by the State. Proceeds from such bonds are administered by the New Mexico State Board of Finance ("**SBOF**"), an entity separate and distinct from the Department.

a. Grantee acknowledges and agrees:
   i. It is Grantee's responsibility to determine through SBOF what (if any) conditions are currently imposed on the Project;
   ii. Department's failure to inform Grantee of an SBOF-imposed condition does not affect the validity or enforceability of the condition;
   iii. The SBOF may in the future impose further or different conditions upon the Project;
   iv. All SBOF conditions are attached to the Project and Appropriation Amount without the need for formal amendment of this Agreement;
   v. All applicable SBOF conditions must be satisfied before the SBOF will release to the Department funds subject to the condition(s) and
   vi. The Department's obligation to reimburse Grantee from the Project is expressly contingent upon the satisfaction of the then-current SBOF conditions.

B. Grantee acknowledges and agrees SBOF may, at its sole and absolute discretion, require reimbursement or remove eligibility for bond proceeds for the Project if the Project doesn't proceed sufficiently.

a. Grantee must comply with the requirement to encumber five percent (5%) of Project funds within six months of bond issuance as certified by Grantee in the Bond Questionnaire and Certification documents submitted to the SBOF.
b. Failure to comply may result in the reassignment of the bond proceeds. Upon reassignment of bond proceeds, this Agreement will be suspended until the entity has demonstrated readiness as determined by the SBOF and the Department.

C. Grantee acknowledges and agrees that this Agreement is subject to the SBOF's Bond Project Disbursements rule, § 2.61.6, NMAC, as may be amended from time to time or re-codified.

XX. GENERAL PROVISIONS

A. Assignment: Grantee's rights and obligations under this Agreement are personal and may not be transferred or assigned without the prior written consent of the State. Any attempt at assignment or transfer

without such consent shall be void. Any assignment or transfer of Grantee's rights and obligations approved by the State shall be subject to the provisions of this Agreement.

B. Subcontractors: Grantee shall not enter any subgrant or subcontract in connection with its obligations under this Agreement without the prior written approval of the State. Upon request, Grantee shall submit to the Department a copy of each such subgrant or subcontract.

C. Binding Effect: Except as otherwise provided, all provisions of this Agreement, including the benefits and burdens, shall extend to and be binding upon the Parties' respective successors and assigns.

D. Authority: Each Party represents and warrants to the other that the execution and delivery of this Agreement and the performance of such Party's obligations have been duly authorized.

E. Captions and References: The captions and headings in this Agreement are for the convenience of reference only and shall not be used to interpret, define, or limit its provisions. All references in this Agreement to sections (whether spelled out or using the § symbol), subsections, exhibits, or other attachments are references to sections, subsections, exhibits, or other attachments contained herein or incorporated as a part hereof, unless otherwise noted.

F. Counterparts: This Agreement may be executed in multiple, identical, original counterparts, each of which shall be deemed to be an original, but all of which, taken together, shall constitute the same agreement.

G. Digital Signatures: If any signatory signs this agreement using a digital signature in accordance with the State Policies regarding the use of digital signatures, then any agreement or consent to use digital signatures within the electronic system through which that signatory signed shall be incorporated into this Agreement by reference.

H. Modification: Except as otherwise provided in this Agreement, any modification to this Agreement shall only be effective if agreed to in a formal amendment, properly executed and approved in accordance with applicable New Mexico law and State fiscal policies and rules. Modifications permitted under this Agreement, other than Agreement amendments, shall conform to the policies issued by the State.

I. Statutes, Regulations, Fiscal Rules, and Other Authority: Any reference in this Agreement to a statute, regulation, policy, or other authority shall be interpreted to refer to such authority then current, as may have been changed or amended after the Effective Date of this Agreement.

J. External Terms and Conditions: Notwithstanding anything to the contrary herein, the State shall not be subject to any provision included in any terms, conditions, or agreements appearing on Grantee's or a subcontractor's website or any provision incorporated into any click-through or online agreements related to the Work unless that provision is specifically referenced in this Agreement.

K. Severability: The invalidity or unenforceability of any provision of this Agreement shall not affect the validity or enforceability of any other provision of this Agreement, which shall remain in full force and effect, provided that the Parties can continue to perform their obligations under this Agreement in accordance with its intent.

L. Survival of Certain Agreement Terms: Any provision of this Agreement that imposes an obligation on a Party after the termination or expiration of this Agreement shall survive the termination or expiration of this Agreement and shall be enforceable by the other Party.

M. Third-Party Beneficiaries: Except for the Parties' respective successors and assigns described in this Agreement, it does not and is not intended to confer any rights or remedies upon any person or entity other than the Parties. Enforcement of this Agreement and all rights and obligations hereunder are reserved solely to the Parties. Any services or benefits that third parties receive as a result of this Agreement are incidental to this Agreement and do not create any rights for such third parties.

N. Waiver: A Party's failure or delay in exercising any right, power, or privilege under this Agreement, whether explicit or by lack of enforcement, shall not operate as a waiver, nor shall any single or partial exercise of any right, power, or privilege preclude any other or further exercise of such right, power, or privilege.

O. Standard and Manner of Performance: Grantee shall perform its obligations under this Agreement in accordance with the highest standards of care, skill, and diligence in Grantee's industry, trade, or profession.

P. Licenses, Permits, and Other Authorizations: Grantee shall secure, prior to the Effective Date, and maintain at all times during the term of this Agreement, at its sole expense, all licenses, certifications, permits, and other authorizations required to perform its obligations under this Agreement and shall ensure that all employees, agents, and subcontractors secure and maintain at all times during the term of their employment, agency or subcontractor, all license, certifications, permits and other authorizations required to perform their obligations in relation to this Agreement.

Q. Publicity: Any Publicity regarding the subject matter of this Agreement may not be released without prior written approval from the Department. For purposes of this agreement, "**Publicity**" means notices, informational pamphlets, press releases, email responses, research, reports, signs, and similar public notices prepared by or for the Grantee or jointly with others.

a. Grantee shall obtain written approval prior to issuing any press release or making any public announcement regarding this agreement. Grantee agrees to obtain approval of the Department in advance with respect to all Public Relations, all communications with media, or all communications with any other member of the public with respect to this agreement, except to acknowledge that an agreement does exist.
b. For purposes of this agreement, "Public Relations" includes community relations and means those activities dedicated to maintaining the Department's image or maintaining or promoting understanding and favorable relations with the community or public at large or any segment of the public.
c. Violations of either Article XX (Q)(a) or (b) shall constitute a material Breach of Agreement.

R. Data Sharing: The State intends to secure and collate specific data generated by Grantee under this Agreement to use in support of the State's organizational, policy-making, and management of public resource functions. State, in accordance with **Exhibit E**, attached hereto and incorporated herein by reference, reserves the right to require Grantee and/or its subcontractors to provide specific data relevant to the above-listed functions. Data provided by Grantee may be incorporated into existing or future developed State integrated analysis tools or databases, including but not limited to geographic information system (GIS) networks and databases accessible by the public. Dissemination of data collected may include historical data and projections based on such historical data.

a. To the extent any data transferred as part of this Agreement is legally determined to be the property of Subrecipient or its subcontractors, Subrecipient and/or its subcontractors grants State a

nonexclusive, fully paid-up right and license to reproduce, use, distribute, do derivative works based on, and archive data transferred as part of this Agreement.

S. Venue and Choice of Law: This Agreement shall be governed by and construed in accordance with the laws of the State of New Mexico, without regard to any conflict of law provisions. Any legal suit, action, or proceeding arising out of or related to this Agreement shall be instituted exclusively in the district courts located in Santa Fe, New Mexico. The Parties hereby irrevocably submit to the exclusive jurisdiction and venue of such courts in any such suit, action, or proceeding. The Parties waive any objection to the laying of the venue of any such suit, action, or proceeding in the district courts of Santa Fe, New Mexico, and irrevocably waive and agree not to plead or claim in any such court that any such suit, action, or proceeding brought in any such court has been brought in an inconvenient forum.

[SIGNATURE PAGE AND EXHIBITS FOLLOW]
[THIS SPACE LEFT BLANK INTENTIONALLY]

IN WITNESS WHEREOF, the parties have duly executed this Agreement as of the Department's date of execution.

APPROVED BY AGING AND LONG-TERM DIVISION (ALTSD):

SPONSOR: or Designee
By:_____
Title:_____ Date:_____

Office of Secretary: or Designee
By:_____
Title:_____ Date:_____

Chief Financial Officer: or Designee
By:_____
Title:_____ Date:_____

Chief Procurement Officer: or Designee
By:_____
Title:_____ Date:_____

AS TO LEGAL FORM AND SUFFICIENCY (ALTSD)

General Counsel's Office: or Designee
By:_____
Title:_____ Date:_____

APPROVED BY GRANTEE:

GRANTEE:	By:_____	
Name	Title:_____	Date:_____
GRANTEE:	By:_____	
Name	Title:_____	Date:_____
GRANTEE:	By: Sarah Piltch (Jan 9, 2026 16:41:22 MST)	
Name Sarah Piltch	Title: Assistant City Attorney	Date: Jan 9, 2026
GRANTEE:	By:_____	
Legal Counsel	Title:_____	Date:_____

EXHIBIT A
Notice of Department's Obligation Form

NOTICE OF OBLIGATION TO REIMBURSE GRANTEE

Notice of Obligation to Reimburse Grantee [# _____]

DATE: _____

TO: Department Representative: **AGING & LONG-TERM SERVICES DEPARTMENT**

FROM: Grantee: _____ Grantee Official Representative:_____

Grantee Address:_____

Name of Senior Center:_____

SUBJECT: Notice of Obligation to Reimburse Grantee

Grant Number:_____

Grant Termination Date:_____

As the designated representative of the Department for Grant Agreement number_____entered into between the Grantee and the Department, I certify that the Grantee has submitted to the Department the following third-party obligation executed, in writing, by the third party's authorized representative:

Vendor or Contractor:_____

Third Party Obligation Amount: _____

Vendor or Contractor:_____

Third Party Obligation Amount: _____

Vendor or Contractor:_____

Third Party Obligation Amount: _____

I certify that the State is issuing this Notice of Obligation to Reimburse Grantee for permissible purposes within The scope of the project description, subject to all the terms and conditions of the above-referenced Grant Agreement.

Grant Amount (Minus AIPP if applicable): $_____

The Amount of this Notice of Obligation: $_____

The Total Amount of all Previously Issued Notices of Obligation: $_____

The Total Amount of all Notices of Obligation to Date: $_____

Note: Contract amounts may exceed the total grant amount, but the invoices paid by the grant will not exceed the grant amount.

Department Rep. Approver:_____Title:_____

Signature:_____Date:_____

Please ensure that all estimates and/or quotes are included with the Notice of Obligation (NOO).

Administrative and/or Indirect Cost – generally, the legislation authorizing the issuance of bonds prohibits the use of its proceeds for indirect expenses (e.g. penalty fees or damages other than pay for work performed, attorney fees, and administrative fees). Such use of bond proceeds shall not be allowed unless specifically authorized by statute.

EXHIBIT B
Request for Payment Form and Certification

STATE OF NEW MEXICO
CAPITAL GRANT PROJECT
Request for Payment Form
Exhibit 1

I. Grantee Information

(Make sure information is complete & accurate)

A. Grantee: _____

B. Senior Center (Name): _____

C. Street Address: _____
(Complete Mailing, including Suite, if applicable)

_____
City State Zip

D. Phone No: _____

E. Grant No: _____

F. Grant Expiration Date: _____

II. Payment Computation

A. Payment Request No. _____

B. Grant Amount: _____

C. AIPP Amount *(If Applicable)*: _____

D. Funds Requested to Date: _____

E.

Date of Invoice	Vendor Name	Amount of Invoice	Amount Applicable to this Grant
Amount Requested this Payment:			

F. Reversion Amount (I*f Applicable*): _____

G. Grant Balance: _____

H. ☐ GF ☐ GOB ☐STB (*attach wire if first draw*)

I. ☐ Final Request for Payment (*if Applicable*)

III. Fiscal Year : _____
(The State of NM Fiscal Year is July 1, 20XX through June 30, 20XX of the following year)

IV. ☐ **Reporting Certification:** I hereby certify to the best of my knowledge and belief, that database reporting is up to date; to include the accuracy of expenditures and grant balance, project status, project phase, achievements and milestones; and in compliance with Article VIII of the Capital Outlay Grant Agreement.

V. ☐ **Compliance Certification:** Under penalty of law, I hereby certify to the best of my knowledge and belief, the above information is correct; expenditures are properly documented, and are valid expenditures or actual receipts; and that the grant activity is in full compliance with Article IX, Sec. 14 of the New Mexico Constitution known as the "anti donation" clause.

_____ _____

Grantee Fiscal Officer
or **Fiscal Agent** (*if applicable*)

Grantee Representative

_____ _____

Printed Name

Printed Name

Date: _____

Date: _____

(State Agency Use Only)

Vendor: _____ **Fund No.:** _____ **Loc No.:** _____

I certify that the State Agency financial and vendor file information agree with the above submitted information.

_____ _____ _____ _____

ALTSD Capital Outlay Bureau Chief Date ALTSD Capital Outlay Fiscal Coordinator Date

PLEASE SUBMIT TO: capital.outlay@altsd.nm.gov

Revised 4-20-18

GRANTEE REQUEST FOR PAYMENT (RFP) CHECKLIST

RFPs **MUST** be submitted as soon as grantee payment has cleared.

____ RFP # _____ (Verify that you are submitting the correct RFP #)

____ A-Code _____ (Verify that you are requesting payment for the correct grant #)

____ Verify $ amount on the RFP corresponds with the total amount of all invoices and proof of payment (i.e., canceled check, credit card receipt)?

____ Did you include the grant expiration date, and is it a valid date?

____ Has CPMS been updated within the current quarter of RFP submittal?

1st Quarter	July 1 – September 30
2nd Quarter	October 1 – December 31
3rd Quarter	January 1 – March 31
4th Quarter	April 1 – June 30

____ Verify that "Amount of invoice" and "Amount applicable to this Grant" are correct. (For example, if an invoice is for $100.00 but only $50.00 applies to the grant, ensure this is correctly captured on the RFP).

Example:

Date of Invoice	Vendor Name	Amount of Invoice	Amount Applicable to this Grant
6/10/2025	ABC construction	$100.00	$50.00
E	X A M P	L E	
Amount Requested this Payment:			$50.00

Are the following required documents included?

RFPs for equipment, construction, and vehicles

___ Invoice (All PRs)

___ Proof of payment (canceled check/ACH payment) (All PRs)

___ Grantee PO (All PRs)

___ Approved NOO

Additional supporting documents for Vehicles (all the above and the following):

___ Certificate of Origin (all the above and PRs for Vehicles)

___ Odometer Disclosure

___ Buyers' Agreement

Please ensure VINs on all supporting documents match.

NOTE: Be advised that 85% of grant funds must be spent 6 months prior to the reversion date.

This is for your use only DO NOT submit with RFP

EXHIBIT C
Quarterly Reports Form and Certification

OPTIONAL EXHIBIT D
SPECIAL CONDITIONS

The capital outlay oversight requires grantees' accounting methods and procedures, including their internal control framework, to be scrutinized, so as to safeguard State capital outlay appropriations and assets acquired with such appropriations.

This Capital Outlay Special Grant Condition(s) **Exhibit D** is necessary pursuant to Executive Order 2013-006 (2.A.2.a-c, if applicable), due to the Grantees' material weaknesses, significant deficiencies, or findings that raised concerns as to the ability to expend grant funds in accordance with applicable law in the organization's FY2022 audit. The Special Conditions identified below apply to the authorized agent, North Central New Mexico Economic Development District (NCNMEDD).

Procurement - All purchases or contracts the Grantee enters that shall use funding from the Department capital appropriations grant must be approved by the Department prior to the initiation of implementing purchasing documents. The Grantee shall receive such prior approval via official correspondence from the Department, which may be through letter or email. The Grantee shall submit the following to the Department in pursuit of prior approval: purchasing policies and procedures, CFO certification, documentation of management and program approval, policies and procedures governing purchasing and contracting, a copy of the current procurement and contracting policies, and documentation regarding informing staff responsible for purchasing and contracting on such policies and procedures.

Budget - Provide documentation of approval of your current budget from DFA Local Government or other authoritative agency. Provide policies and procedures on who is responsible for and how annual budgets (expenditures and revenue) are established, monitored and adjusted. Provide a corrective action plan on how budget issues identified in your audit will be/have been addressed. Also include documentation on how staff responsible for budgeting is informed on budget policies and procedures.

Capital Assets - Provide a complete list of inventory including inventory control numbers and current location. Provide policies and procedures on capital assets and inventory and specify how the proposed purchased items will be included, tagged, and tracked in capital asset inventory. Also include documentation on how staff responsible for capital assets is informed on capital asset policies and procedures.

Travel and Per Diem - Provide policies and procedures on travel and per diem. Also include how staff who travel and those responsible for travel reimbursement are informed on travel and per diem policies and procedures.

Timely Audits – Provide policies and procedures on annual audits. Provide documentation on how and who is responsible for insuring that annual audits are completed timely. Also include documentation on how staff responsible for the annual audit is informed on audit policies and procedures.

Cash Management – policies and procedures on cash management of federal funds. Provide procedures used to draw and disburse federal funds. Provide procedures to reconcile draw amounts, deposits and disbursements; and to prepare federal cash reporting documents to ensure compliance with federal regulations.

The Grantee was required to, and has provided sufficient documentation regarding "funds may not be released until ALTSD, and its legal counsel has reviewed audits and the approved agreement identifying a fiscal agent", as referenced in the Grantee's 2022 and 2023 Audit file. Therefore, the criteria to enter into this agreement have been met.

EXHIBIT E
Data Sharing Provisions

City of Santa Fe New Mexico

Finance Department

Project Ledger Request Form

Date of Request: 12/19/2025

Project Title: NM ALTSD Capital Appropriation A22-G5354

Project Type: ☐ CIP ☑ Grant ☐ Internal Tracking

Project ID: ~~COM2634502~~ SSD2634502 CMT

Grant ID: S2643

Approved By: BSG 12.30.25 Erika Lujan 1/2/26

(Finance Use Only)

Department: Community Services/Seniors Project Manager: Manuel Sanchez Ext: 4710

Project Date Range: Effective Date to 06/30/2026 ☑ Create Fixed Asset

---

☐ Multi-Funding (complete all funding sources, should equal 100%)

Funding Source: New Mexico Agency on Aging % of Funding: 100%

MUNIS ORG: 3459981 MUNIS OBJ: 490240 Awarded Amount: $65,805.00

Funding Source: _____ % of Funding: _____

MUNIS ORG: _____ MUNIS OBJ: _____ Awarded Amount: _____

Expense String Phase:

A project must have at least one phase identified, this can be used as an additional level of tracking, for example, CIP - Design, Construction, etc. For Grants can be used as reimbursable types, such as transportation, salaries.

(You can create more than one phase and you can default MUNIS ORGs and OBJs, optional)

Phase: 1 MUNIS ORG: 3459981 MUNIS OBJ: 570500

Grants Only (list all grants if applicable):

Grantor Name: NM State Aging & Long-Term Services Department (NMAOA) Awarded Amount: $65,805.00

AR Charge Code: 3459981.490240 ☐ Grant funds multiple projects (Complete a form for each project)

Grantor Id: A22-G5354 Federal CFDA (if applicable): _____

Grantor Name: _____ Awarded Amount: _____

AR Charge Code: _____ ☐ Grant funds multiple projects (Complete a form for each project)

Grantor Id: _____ Federal CFDA (if applicable): _____

(If grants please provide all grant award documents with form) ☑ Attached Grant Documentation

Log # *(Finance use only)*:	
Journal # *(Finance use only)*:	

City of Santa Fe, New Mexico
BUDGET AMENDMENT RESOLUTION (BAR)

DEPARTMENT / DIVISION NAME	DATE
Community Services/Senior Services	1/13/2025

ITEM DESCRIPTION	ORG	OBJECT	PROJECT	INCREASE	DECREASE
EXPENDITURES				*(enter as positive #)*	*(enter as negative #)*
Equipment & Machinery Non-Exempt	3459981	570500	SSD2634502	65,805.00	
REVENUES				*(enter as negative #)*	*(enter as positive #)*
NM Agency on Aging	3459981	490240	SSD2634502	(65,805)	
				0	0

JUSTIFICATION: *(use additional page if needed)*
--Attach supporting documentation/memo

State of New Mexico Aging and Long Term Servies Capital Outlay Grant Agreement Capital Appropriation Project A22-G5354

(Complete section below if BAR results in a net change to ANY Fund)	
Fund(s) Affected	Fund Balance Increase/(Decrease)
TOTAL:	0

Theresa Trujillo — Prepared By *(print name)* — 1/13/2025 Date

Manuel Sanchez — Division Director Signature *(optional)* — Jan 14, 2026 Date

Manuel Sanchez — Department Director Signature — Jan 14, 2026 Date

(Use this form for Finance Committee/ City Council agenda items ONLY)

CITY COUNCIL APPROVAL

City Council Approval Date

Agenda Item #

Andy Hopkins — Budget Officer — Date

Andrea Phillips, Interim Finance Director/Deputy Ch

Finance Director *(≤ $5,000)* — Date

City Manager *(≤ $60,000)* — Date

Signature: Andy Hopkins

Email: ajhopkins@santafenm.gov

Signature: ANDREA PHILLIPS (Jan 15, 2026 13:19:40 MST)

Email: akphillips@santafenm.gov

CITY OF SANTA FE

The Purchasing Memo

Date: January 14, 2026

To: Governing Body, Finance Committee, and Quality of Life Committee

Via: Thomas Grundler, Interim Chief of Police THOMAS GRUNDLER (Jan 14, 2026 16:41:09 MST)

From: Ben Valdez, Deputy Chief of Police B. Valdez, DC (Jan 14, 2026 13:58:26 MST)

Subject: Extension of Animal Shelter Contract/ Professional Services Agreement Amendment #3

Vendor Name: Santa Fe Animal Shelter and Humane Society

Munis Vendor Number: 1521

ITEM AND ISSUE:

The Police Department respectfully requests your review and approval of Amendment #3 to Contract #3250332 with Santa Fe Animal Shelter for animal boarding and care services. Amendment #3 increases the amount of compensation by $136,800 not to exceed, for a total contract amount of $567,089 and extends the term by an additional three months.

CONTRACT NUMBER:

The FY25 Munis contract number is 3250332.

BACKGROUND AND SUMMARY:

The original contract, City Clerk's #25-0011, was executed on January 14, 2025, as an emergency agreement. During the contract term, a Request for Proposals (RFP) was issued and remains under evaluation. Amendment #1, executed on August 8, 2025, increased the contract compensation by $150,000 and extended the term by six months, establishing a new expiration date of February 5, 2026. At this time, negotiations between the City of Santa Fe and the Animal Shelter are still ongoing, and a final agreement has not yet been reached. Amendment #2, executed on December 16, 2025, increased the compensation by $152,289. This additional time will allow us to complete the rfp process, finalize a contract and present to Governing Body for approval.

PRIOR APPROVALS AND SUPPORTING INFORMATION:

FUNDING SOURCE:

Fund Name/Number: Law Enforcement/223

Munis Org Name/Number: Police Administration/2230310

Munis Object Name/Number: Service Contracts/510310

Budget Officer / Designee:_____ **Date:**_____

Budget Officer Comment/Exceptions: _____

PROCUREMENT METHOD:

The procurement method used was NMSA 1978, Section 13-1-127, Emergency

Emergency #50-M0087-24-EM158

Chief Procurement Officer (CPO)/Designee: _____ **Date:** _____

CPO Comment/Exceptions: _____

ASSOCIATED APPROVALS:

IT Components included? ☐ **Yes |** ☒ **No**

Approval: _____ **Title:** _____ **Date:** _____

Comment/Exceptions: _____

Treasury/Point of Sale Components included? ☐ **Yes |** ☒ **No**

Approval: _____ **Title:** _____ **Date:** _____

Comment/Exceptions: _____

Vehicles included? ☐ **Yes |** ☒ **No**

Approval: _____ **Title:** _____ **Date:** _____

Comment/Exceptions: _____

Construction to City Facilities, Furniture, and/or Fixtures included? ☐ **Yes |** ☒ **No**

Approval: _____ **Title:** _____ **Date:** _____

Comment/Exceptions: _____

Is this an externally funded purchase? ☐ **Yes |** ☒ **No**

If yes, what is the issuing agency: _____

Approval: _____ **Title:** _____ **Date:** _____

Comment/Exceptions: _____

Is this a Capital Asset or Project? ☐ **Yes |** ☒ **No**

Project Ledger Number: _____

Approval: _____ **Title:** _____ **Date:** _____

Comment/Exceptions: _____

ATTACHMENTS:

Procurement document: Emergency Determination
Original contract packet (with previous contract amendment #1 and #2)
Contract Amendment #3

Item #: _____
Munis Contract #: __3250332____
Original Contract Item #: ___25-0011____
SWPA/GSA/Coop/RFP/ITB #: Emergency #50-M0087-24-EM158_

CITY OF SANTA FE, POLICE DEPARTMENT]
AMENDMENT No. 3 TO
Contract # 3250332

Santa Fe Animal Shelter Services Contract

This AMENDMENT No. 3 (the "Amendment") amends the CITY OF SANTA FE CONTRACT, dated January 14, 2025 (the "Contract"), between the City of Santa Fe (the "City") and Santa Fe Animal Shelter and Humane Society, Inc. (the "Contractor"). The date of this Amendment shall be the date when it is executed by the City and the Contractor whichever occurs last.

RECITALS:

A. Under the terms of the Contract, Contractor has agreed to provide the City professional services, in accordance with the terms and conditions hereinafter set out, and the Contractor understanding and consenting to the foregoing is willing to render such professional services as outlined in the Contract.

B. Pursuant to Article 14 of the Contract, and for good and valuable consideration, the receipt and sufficiency of which are acknowledged by the parties, the City and the Contractor agree as follows:

1. COMPENSATION.

Article 3, paragraph A of the Contract is amended to increase the amount of compensation by a total of $136,800 so that Article 3, paragraph A reads in its entirety as follows:

> A. The City shall pay to the Contractor in full payment for services satisfactorily performed based on the per hour/per treatment costs listed in Attachment A. Such compensation shall not exceed five hundred sixty-seven thousand eighty-nine dollars ($567,089), including gross receipts tax. **The total amount payable to the Contractor under this Contract, including gross receipts, tax and expenses, shall not exceed ($567,089).**

2. TERM:

Article 4 of the Contract is hereby deleted in its entirety and substitute the following Article 4 in its place:

THIS CONTRACT SHALL NOT BECOME EFFECTIVE UNTIL APPROVED BY THE CITY. This Contract shall terminate 3 months from the date of signature unless terminated pursuant to paragraph 5 (Termination) and paragraph 6 (Appropriations).

3. CONTRACT IN FULL FORCE.

Except as specifically provided in this Amendment, the Contract remains and shall remain in full force and effect, in accordance with its terms.

[REMAINDER OF PAGE INTENTIONALLY LEFT BLANK]

[SIGNATURE PAGE TO FOLLOW]

IN WITNESS WHEREOF, the parties have executed this Amendment No. 3 to the Contract as of the dates set forth below.

CITY OF SANTA FE:

_____
MICHAEL GARCIA, MAYOR

DATE:_____

CONTRACTOR:

Jackie Roach
JACKIE ROACH

CEO
TITLE

DATE: Jan 15, 2026
NMBTIN: _____

ATTEST:

_____
CITY CLERK

CITY ATTORNEY'S OFFICE:

Christopher W. Ryan
Christopher W. Ryan (Jan 15, 2026 15:16:34 MST)
CHRIS RYAN, SENIOR ASSISTANT CITY ATTORNEY

APPROVED FOR FINANCES:

_____
FINANCE DIRECTOR

CITY OF SANTA FE

The Purchasing Memo

Date: October 21, 2025

To: Governing Body, Finance Committee, and Quality of Life Committee

Via: Paul Joye, Chief of Police Paul Joye (Oct 21, 2025 14:04:25 MDT)

From: Ben Valdez, Deputy Chief of Police B. Valdez, DC (Oct 21, 2025 13:51:39 MDT)

Subject: Extension of Animal Shelter Contract/ Professional Services Agreement

Vendor Name: Santa Fe Animal Shelter and Humane Society

Munis Vendor Number: 1521

ITEM AND ISSUE:

The Police Department respectfully requests your review and approval of Amendment #2 to Contract #3250332 with Santa Fe Animal Shelter for animal boarding and care services. Amendment #2 increases the amount of compensation by $152,289 not to exceed, for a total contract amount of $430,289.

CONTRACT NUMBER:

The FY25 Munis contract number is 3250332.

BACKGROUND AND SUMMARY:

The original contract, City Clerk's #25-0011, was executed on January 14, 2025, as an emergency agreement. During the contract term, a Request for Proposals (RFP) was issued and remains under evaluation. Amendment #1, executed on August 8, 2025, increased the contract compensation by $150,000 and extended the term by six months, establishing a new expiration date of February 5, 2026. At this time, negotiations between the City of Santa Fe and the Animal Shelter are still ongoing, and a final agreement has not yet been reached.

PRIOR APPROVALS AND SUPPORTING INFORMATION:

FUNDING SOURCE:

Fund Name/Number: Law Enforcement/223

Munis Org Name/Number: Police Administration/2230310

Munis Object Name/Number: Service Contracts/510310

Budget Officer / Designee: Andy Hopkins **Date:** 11/07/2025

Budget Officer Comment/Exceptions: _____

PROCUREMENT METHOD:

The procurement method used was NMSA 1978, Section 13-1-127, Emergency

Emergency #50-M0087-24-EM158

Chief Procurement Officer (CPO)/Designee: _____ **Date:** 11/09/2025

CPO Comment/Exceptions: _____

ASSOCIATED APPROVALS:

IT Components included? ☐ **Yes |** ☒ **No**

Approval: _____ **Title:** _____ **Date:** _____

Comment/Exceptions: _____

Treasury/Point of Sale Components included? ☐ **Yes |** ☒ **No**

Approval: _____ **Title:** _____ **Date:** _____

Comment/Exceptions: _____

Vehicles included? ☐ **Yes |** ☒ **No**

Approval: _____ **Title:** _____ **Date:** _____

Comment/Exceptions: _____

Construction to City Facilities, Furniture, and/or Fixtures included? ☐ **Yes |** ☒ **No**

Approval: _____ **Title:** _____ **Date:** _____

Comment/Exceptions: _____

Is this an externally funded purchase? ☐ **Yes |** ☒ **No**

If yes, what is the issuing agency: _____

Approval: _____ **Title:** _____ **Date:** _____

Comment/Exceptions: _____

Is this a Capital Asset or Project? ☐ **Yes |** ☒ **No**

Project Ledger Number: _____

Approval: _____ **Title:** _____ **Date:** _____

Comment/Exceptions: _____

ATTACHMENTS:

Procurement document: Emergency Determination
Original contract packet (with previous contract amendment #1)
Contract Amendment #2

Item #: 25-0564
Munis Contract #: 3250332
Original Contract Item #: 25-0011
SWPA/GSA/Coop/RFP/ITB #: Emergency #50-M0087-24-EM158

CITY OF SANTA FE, POLICE DEPARTMENT]
AMENDMENT No. 2 TO
Contract # 3250332

Santa Fe Animal Shelter Services Contract

This AMENDMENT No. 2 (the "Amendment") amends the CITY OF SANTA FE CONTRACT, dated January 21, 2025 (the "Contract"), between the City of Santa Fe (the "City") and Santa Fe Animal Shelter and Humane Society, Inc. (the "Contractor"). The date of this Amendment shall be the date when it is executed by the City and the Contractor whichever occurs last.

RECITALS:

A. Under the terms of the Contract, Contractor has agreed to provide the City professional services, in accordance with the terms and conditions hereinafter set out, and the Contractor understanding and consenting to the foregoing is willing to render such professional services as outlined in the Contract.

B. Pursuant to Article 14 of the Contract, and for good and valuable consideration, the receipt and sufficiency of which are acknowledged by the parties, the City and the Contractor agree as follows:

1. COMPENSATION.

Article 3, paragraph A of the Contract is amended to increase the amount of compensation by a total of $152,289 so that Article 3, paragraph A reads in its entirety as follows:

> A. The City shall pay to the Contractor in full payment for services satisfactorily performed based on the per hour/per treatment costs listed in Attachment A. Such compensation shall not exceed four hundred thirty thousand two hundred eighty-nine dollars ($430,289), including gross receipts tax paid at the rate of 8.1875%. **The total amount payable to the Contractor under this Contract, including gross receipts, tax and expenses, shall not exceed ($430,289).**

2. CONTRACT IN FULL FORCE.

Except as specifically provided in this Amendment, the Contract remains and shall remain in full force and effect, in accordance with its terms.

IN WITNESS WHEREOF, the parties have executed this Amendment No. 2 to the Contract as of the dates set forth below.

CITY OF SANTA FE:

Alan Webber (Dec 16, 2025 17:07:32 MST)

ALAN WEBBER, MAYOR

DATE: Dec 16, 2025

CONTRACTOR:

Jackie Roach

JACKIE ROACH, CEO

DATE: Nov 6, 2025

NMBTIN: _____

ATTEST:

ANDREA SALAZAR (Dec 16, 2025 17:09:17 MST)

CITY CLERK

GB MTG 12/10/20252

CITY ATTORNEY'S OFFICE:

Christopher Ryan

Christopher Ryan (Nov 6, 2025 15:14:40 MST)

SENIOR ASSISTANT CITY ATTORNEY

APPROVED FOR FINANCES:

Emily K. Oster

FINANCE DIRECTOR

CITY OF SANTA FE

The Purchasing Memo

Date: July 8, 2025

To: Governing Body and Finance Committee

Via: Paul Joye, Chief of Police

From: Ben Valdez, Deputy Chief of Police

Subject: Extension of Animal Shelter Contract/ Professional Services Agreement

Vendor Name: Santa Fe Animal Shelter and Humane Society

Munis Vendor Number: 1521

ITEM AND ISSUE:

The Police Department respectfully requests your review and approval of Amendment #1 to Contract #3250332 with Santa Fe Animal Shelter for animal boarding and care services. Amendment #1 increases the amount of compensation and extends the term by $150,000 not to exceed for a total compensation of $278,000 for a term of an additional six months.

CONTRACT NUMBER:

The FY25 Munis contract number is 3250332.

BACKGROUND AND SUMMARY:

The original contract, City Clerk's #25-0011, was executed on January 14, 2025. During the term of this emergency agreement, a Request for Proposals (RFP) was issued and is currently still under review. At this time, a new agreement between the City of Santa Fe and the Animal Shelter has not yet been finalized. As the current contract is set to expire on July 14, 2025, we are requesting an extension to ensure the continuity of services without interruption.

PRIOR APPROVALS AND SUPPORTING INFORMATION:

FUNDING SOURCE:

Fund Name/Number: Law Enforcement/223

Munis Org Name/Number: Police Administration/2230310

Munis Object Name/Number: Service Contracts/510310

Budget Officer / Designee: Andy Hopkins **Date:** 07/09/2025

Budget Officer Comment/Exceptions: _____

PROCUREMENT METHOD:

The procurement method used was NMSA 1978, Section 13-1-127, Emergency

Emergency #50-M0087-24-EM158

Chief Procurement Officer (CPO)/Designee: _____ **Date:** 07/14/2025

CPO Comment/Exceptions: Please include the new emergency posting - 6 Months

ASSOCIATED APPROVALS:

IT Components included? ☐ **Yes** | ☒ **No**

Approval: _____ **Title:** _____ **Date:** _____

Comment/Exceptions: _____

Treasury/Point of Sale Components included? ☐ **Yes** | ☒ **No**

Approval: _____ **Title:** _____ **Date:** _____

Comment/Exceptions: _____

Vehicles included? ☐ **Yes** | ☒ **No**

Approval: _____ **Title:** _____ **Date:** _____

Comment/Exceptions: _____

Construction to City Facilities, Furniture, and/or Fixtures included? ☐ **Yes** | ☒ **No**

Approval: _____ **Title:** _____ **Date:** _____

Comment/Exceptions: _____

Is this an externally funded purchase? ☐ **Yes** | ☒ **No**

If yes, what is the issuing agency: _____

Approval: _____ **Title:** _____ **Date:** _____

Comment/Exceptions: _____

Is this a Capital Asset or Project? ☐ **Yes** | ☒ **No**

Project Ledger Number: _____

Approval: _____ **Title:** _____ **Date:** _____

Comment/Exceptions: _____

ATTACHMENTS:

Procurement document: Emergency Determination
Original contract packet (with previous contract amendments)
Contract Amendment

City of Santa Fe
Emergency Determination Form

The emergency procurement method may only be used as described in NMSA 1978, Section 13-1-127 and in the City's Procurement Manual XII.

The Department that makes an emergency procurement to plan or prepare for the response to a serious threat to public health, welfare, safety or property caused by a flood, fire, epidemic, riot, act of terrorism, equipment failure or similar event shall account for the money spent in making the procurement and report on that accounting to the City's Finance Department Director within ninety days after the end of the contract or fiscal year in which the procurement was made, whichever comes first.

I. City Contact Info:

Department: **Police, City of Santa Fe**
Department Director: **Paul Joye, Police Chief**
Department Contact: **Tara King**
Department Telephone Number: **(505) 955-5004**
City of SF Chief Procurement Officer: **Travis Dutton-Leyda, CPO**
Telephone Number: **(505) 629-8351**

II. Contractors' Information:

1. **Loving Care Cremation**
   - **Services**: Pet cremation services, including individual and communal cremation options.
   - **Contact Information**:
     - **Phone**: (505) 466-6034
     - **Address**: 8A Old Las Vegas Hwy, Santa Fe, NM 87505

2. **Mosaic Animal Emergency & Specialty**
   - **Services**: Emergency veterinary care, specialty services, and advanced diagnostics.
   - **Contact Information**:
     - **Phone**: (505) 216-0606
     - **Address**: 20 Bisbee Ct, Santa Fe, NM 87508

3. **Roadrunner Veterinary Emergency & Specialty Hospital**
   - **Services**: Emergency and specialty veterinary care; surgery and diagnostic services.
     - **Phone:** (505) 345-2322
     - **Address:** 5 Camino Karsten, Algodones, NM 87001

4. **Santa Fe Animal Shelter & Humane Society**
    - **Services**: Animal sheltering, adoption, veterinary services, and public outreach.
    - **Contact Information**:
        - **Address**: 100 Caja del Rio Road, Santa Fe, NM 87507
        - **Phone**: (505) 983-4309

5. **Top Dog Pet Resort**
    - **Services**: Pet daycare, grooming, boarding, and specialty services.
    - **Contact Information**:
        - **Address**: 100 Sun Ave, Santa Fe, NM 87505
        - **Phone**: (505) 982-6080

III. **Term of prospective contract: <u>Up to 3 months</u>**

IV. **Amount of prospective contract: <u>Two hundred thousand dollars ($200,000.00)</u>**

V. **Location of Services: <u>Throughout the City of Santa Fe</u>**

VI. **Please thoroughly list the services (scope of work), construction or items of tangible personal property of the contract:**

Scope of Work for Animal Services Contract

The contracted provider will perform the following services to support the City of Santa Fe in meeting its urgent animal welfare, public health, and compliance needs. The contractor must ensure adherence to all applicable city ordinances, particularly SFCC 1987 Chapter V, Animal Control Ordinances, and provide consistent, humane, and timely care for animals under the city's jurisdiction. **The contractor shall comply with all provisions of law and regulations as set forth in Chapter V of SFCC 1987, pursuant to Section 5-11.1.B of the Animal Control Ordinance.**

1. Shelter Operations and Animal Care

- **Facility Management**: Operate a safe, sanitary, and fully staffed animal shelter as a housing facility to care for and shelter stray, abandoned, or seized animals.
- **Intake and Animal Control**: Accept animals brought by the City's Animal Services Officers, including stray, injured, or surrendered animals. Provide adequate housing, food, and care.
- **Quarantine and Rabies Control**: Confine and manage animals involved in bite incidents or suspected rabies cases. Report and deliver deceased animals as required for rabies testing.
- **Feral Cat Management**: Assess feral cats and, if healthy, provide sterilization before releasing them back to their original location or finding suitable alternative placements.
- **Holding Period Compliance**: Retain animals during the legally mandated holding period, transferring ownership to the shelter upon the hold's expiration unless other arrangements are specified by law.

2. Veterinary Care

- **Routine and Emergency Medical Services**: Provide veterinary evaluations, vaccinations, routine treatments, and emergency medical care as necessary to ensure animal welfare.

- **Veterinary Oversight**: Ensure that all medical care decisions, including euthanasia, are made by a licensed veterinarian. Euthanize animals only when medically necessary and notify the City of such actions.

3. Licensing and Public Health Compliance

- **Licensing**: Oversee pet licensing processes in alignment with city regulations. Collect and retain licensing fees, maintaining records and providing the City with access as needed.
- **Public Health Reporting**: Coordinate with health authorities, including the New Mexico Department of Public Health, on communicable diseases or incidents affecting public safety.

4. Storage and Disposal of Remains

- **Storage of Deceased Animals**: Maintain appropriate facilities (e.g., freezers) for storing the remains of deceased animals received from Animal Services Officers.
- **Cremation Services**: Provide timely and humane disposal of animal remains through cremation, ensuring environmental and public health compliance.

5. Administrative and Reporting Responsibilities

- **Detailed Documentation and Reporting**: Maintain records for each animal, including intake, care, medical treatment, and final disposition. Submit monthly status reports to the City, summarizing shelter activities and public health-related incidents.
- **Collaboration with City Representatives**: Work with city representatives to manage intake processes when city staff are unavailable and handle the release of impounded animals to owners outside regular operating hours.

VII. **Provide an explanation for the justification of the procurement including a description of the emergency condition(s) requiring use of emergency procurement and the practicable competition utilized in compliance with NMSA 1978, Section 13-1-127.**

The emergency procurement for animal services in Santa Fe is justified due to the immediate need for continued animal shelter operations, veterinary care, and compliance with public health regulations. The city's ability to care for stray, injured, and abandoned animals is essential for public safety and animal welfare. Without an established vendor, Santa Fe faces risks, including:

1. Public Health Risks: Managing rabid or diseased animals is critical to prevent the spread of diseases like rabies. The inability to quarantine, vaccinate, or euthanize animals as necessary could pose a health risk to the community.

2. Legal and Regulatory Compliance: The city is mandated to uphold Chapter V of the Santa Fe City Code, which outlines strict requirements for shelter operations, animal handling, and licensing. Failure to comply could lead to legal repercussions and public safety risks.

3. Immediate Animal Welfare Concerns: Without shelter and veterinary care, the city cannot meet basic animal welfare needs. This would likely lead to overcrowding in temporary holding facilities, inability to provide adequate care, and compromised humane treatment for animals.

4. Practicable Competition: In compliance with NMSA 1978, Section 13-1-127, an expedited yet

practicable competitive process was utilized. Potential service providers within a reasonable distance of Santa Fe were considered, ensuring that the selected vendor meets city requirements and can initiate services without delay.

This emergency procurement process enables the city to fulfill essential animal services swiftly and within compliance, ensuring safety, welfare, and public health for the residents of Santa Fe.

VIII. **Please describe what measures are being taken to minimize the duration and effect of this emergency procurement (for example: is the emergency only in place until a competitive process can be completed, etc.).**

Measures to Minimize Duration and Impact of Emergency Procurement

This emergency procurement is structured as a temporary solution to address the city's immediate need for animal services. To ensure it is in place only as long as necessary, the following measures are being taken:

1. Transition Plan to Competitive Procurement: The emergency contract will remain active only until a standard competitive procurement process can be completed. The city is actively in the process of a formal Request for Proposals (RFP) to secure long-term service providers through a competitive, transparent process.

2. Short-Term Contract with Defined Limits: The emergency procurement has clear limits in scope and duration to minimize dependency. The city has restricted services to the most critical functions, such as shelter operations, veterinary care, and public health compliance, essential for public safety and animal welfare.

3. Monitoring and Evaluation: The city will monitor the contractor's performance under the emergency contract, using this data to refine service requirements and improve the competitive bidding process. Monthly status reports from the contractor will ensure oversight and facilitate a smoother transition to long-term providers.

These measures are intended to minimize both the impact and duration of the emergency contract, ensuring that the city's animal services can return to a competitively bid, stable solution as soon as possible.

IX. **Describe what measures the Department will take in the future to prevent/mitigate use of emergency procurement under similar circumstances.**

To prevent or mitigate the need for emergency procurements in similar situations, the Department will take the following proactive steps:

1. Immediate RFP Process: The Department is currently in the process of a Request for Proposals (RFP) to secure long-term, competitively bid contracts for essential animal services. This proactive approach will reduce reliance on short-term emergency measures.

2. Advanced Contract Planning: In the future, the Department will implement advanced planning for contract renewals and potential vendor changes. This will include monitoring contract timelines and setting internal reminders to initiate competitive bidding well before contract expiration dates.

3. Contingency Partnerships: The Department will work to establish contingency agreements with additional animal service providers to ensure a rapid response in the event of vendor loss or service disruption. By having alternative providers identified, the Department can reduce delays and maintain service continuity.

4. Regular Market Assessments: Conducting periodic market assessments will help identify qualified vendors within the region, ensuring that the city has a pool of providers ready to respond to an RFP, if needed. This process will also aid in securing providers who meet the city's specific needs, reducing the likelihood of service disruptions.

By taking these steps, the Department aims to enhance preparedness and reduce reliance on emergency procurement, securing uninterrupted, compliant, and humane animal services for the City of Santa Fe.

Certified by:



07/03/2025

City Chief Procurement Officer, Travis Dutton-Leyda **Date**

City Approval by:

Paul Joye (Jul 3, 2025 15:54 MDT)

07/03/2025

Department Director, Paul Joye, Police Chief **Date**

Marcos Martinez
Marcos Martinez (Jul 3, 2025 17:00 MDT)

on behalf of

07/03/2025

City Attorney, Erin McSherry **Date**

Mark Scott (Jul 7, 2025 15:48 MDT)

07/07/2025

City Manager, Mark Scott **Date**

Emily K. Oster

07/03/2025

Finance Director, Emily Oster **Date**

Note: All emergencies must be posted to the SPD website:
https://www.generalservices.state.nm.us/statepurchasing/submit-emergency.aspx
and the City of Santa Fe's website:
https://santafenm.gov/finance-2/purchasing-1/solicitations

Item #: 25-0357
Munis Contract #: 3250332
Original Contract Item #: 25-0011
SWPA/GSA/Coop/RFP/ITB #: Emergency #50-M0087-24-EM158

CITY OF SANTA FE, POLICE DEPARTMENT]
AMENDMENT No. 1 TO
Contract # 3250332

Santa Fe Animal Shelter Services Contract

This AMENDMENT No. 1 (the "Amendment") amends the CITY OF SANTA FE CONTRACT, dated January 14, 2025 (the "Contract"), between the City of Santa Fe (the "City") and Santa Fe Animal Shelter and Humane Society, Inc. (the "Contractor"). The date of this Amendment shall be the date when it is executed by the City and the Contractor whichever occurs last.

RECITALS:

A. Under the terms of the Contract, Contractor has agreed to provide the City professional services, in accordance with the terms and conditions hereinafter set out, and the Contractor understanding and consenting to the foregoing is willing to render such professional services as outlined in the Contract.

B. Pursuant to Article 14 of the Contract, and for good and valuable consideration, the receipt and sufficiency of which are acknowledged by the parties, the City and the Contractor agree as follows:

1. COMPENSATION.

Article 3, paragraph A of the Contract is amended to increase the amount of compensation by a total of $150,000 so that Article 3, paragraph A reads in its entirety as follows:

> A. The City shall pay to the Contractor in full payment for services satisfactorily performed based on the per hour/per treatment costs listed in Attachment A. Such compensation shall not exceed two hundred seventy-eight thousand dollars ($278,000), including gross receipts tax ("NMGRT"). NMGRT will be paid at the rate of 8.1875%. **The total amount payable to the Contractor under this Contract, including gross receipts, tax and expenses, shall not exceed ($278,000).**

2. TERM:

Article 4 of the Contract is hereby deleted in its entirety and substitute the following Article 4 in its place:

THIS CONTRACT SHALL NOT BECOME EFFECTIVE UNTIL APPROVED BY THE CITY. This Contract shall terminate 6 months from the date of signature unless terminated pursuant to paragraph 5 (Termination) and paragraph 6 (Appropriations).

3. CONTRACT IN FULL FORCE.

Except as specifically provided in this Amendment, the Contract remains and shall remain in full force and effect, in accordance with its terms.

IN WITNESS WHEREOF, the parties have executed this Amendment No. 1 to the Contract as of the dates set forth below.

CITY OF SANTA FE:

Alan Webber (Aug 5, 2025 12:36:25 MDT)

ALAN WEBBER, MAYOR

DATE: Aug 5, 2025

CONTRACTOR:
Santa Fe Animal Shelter and Humane Society, Inc.

Jackie Roach

JACKIE ROACH, Chief Executive Officer

TITLE

DATE: 07/03/2025

NMBTIN: _____

ATTEST:

ANDREA SALAZAR (Aug 5, 2025 12:58:35 MDT)

CITY CLERK
GB MTG 07/30/2025

CITY ATTORNEY'S OFFICE:

Christoher W. Ryan

Christoher W. Ryan (Jul 3, 2025 10:24 MDT)

SENIOR ASSISTANT CITY ATTORNEY

APPROVED FOR FINANCES:

Emily K. Oster

FINANCE DIRECTOR

CITY OF SANTA FE

Date: January 3, 2025

To: Governing Body
Finance Committee
Quality of Life Committee

Via: Randy Randall, Interim City Manager Randy Randall (Jan 14, 2025 08:10 MST)
Paul Joye, Chief of Police Paul J. Joye (Jan 3, 2025 17:43 MST)

From: **Ben Valdez, Deputy Chief of Police** B. Valdez, DC (Jan 3, 2025 17:29 MST)

Subject: **Professional Services Agreement**

Vendor Name: **Santa Fe Animal Shelter and Humane Society**

Vendor Number: **1521**

ITEM AND ISSUE:
Request for Approval of the Emergency Professional Services Agreement between the Santa Fe Animal Shelter and Humane Society, Inc. and City of Santa Fe, for a six month agreement not to exceed a total of $128,000.00. (Ben Valdez, Deputy Chief of Police, bpvaldez@santafenm.gov)

Action Requested: Approval of a Professional Services Agreement for $128,000.

BACKGROUND AND SUMMARY:
The City of Santa Fe does not maintain their own animal shelter facility and has historically utilized the Santa Fe Animal Shelter and Humane Society to a facility for the humane housing of domestic animals, including veterinarian care for strays, and disposal services by way of cremation. Once animals complete the mandatory stray hold period, the Santa Fe Animal Shelter and Humane Society takes responsibility of the animals and facilitates adoptions.

The Emergency Professional Services Agreement for animal services in Santa Fe is justified due to the immediate need for continued animal shelter operations, veterinary care, and compliance with public health regulations. The city's ability to care for stray, injured, and abandoned animals is essential for public safety and animal welfare. Without an established vendor, Santa Fe faces numerous risks.

While this Emergency Agreement is in place, staff is concurrently completing the Request for Proposals (RFP) process to achieve a long term, multi-year agreement to for the operation of an animal shelter facility through a contractor. Having this agreement allows shelter operations to continue until the RFP process is complete.

PROCUREMENT METHOD:
NMSA 1978, Section 13-1-127 # 50-M0087-24-EM158 (determination form attached)

Chief Procurement Officer Approval: _____ **Date:** Jan 9, 2025
Comment/Exceptions: _____

Supporting Information:

CONTRACT NUMBER:
FY25 Munis Contract # is 3250332

$$$$$ SOURCE/REVENUE: ☒Expense | ☐Revenue
The funding source is:
Fund Name/Number: Law Enforcement/223
Munis Org Name/Number: Police Administration/2230310
Munis Object Name/Number: Service Contracts/510310

Budget Officer Approval: Andy Hopkins **Date:** Jan 6, 2025
Comment/Exceptions: _____

Grant ☐Yes | ☒ No
Grant #: N/A
Grant Manager/Accounting Officer Approval: N/A **Date:** _____
Comment/Exceptions: _____

Project ☐Yes | ☒ No
Project Ledger #: _____

CAPITAL ASSET (will this procurement result in a tangible item that costs more than $5,000
☐Yes | ☒ No
Asset # (if known): _____

Repair or Replacement of Existing Equipment:
☐Yes | ☒ No
Capital Project:
(New and improvement projects that are going to cost $10,000 or more)
☐ Yes | ☒ No
Department Approvals:
IT Components: ☐ **Yes | ☒ No**
Vehicles: ☐ **Yes | ☒ No**
Facilities, Furniture, Fixtures, Equipment: ☐ **Yes | ☒ No**
Approval: N/A **Title:** _____ **Date:** _____
Approval: _____ **Title:** _____ **Date:** _____
Comment & Exceptions: _____

Department Contract Administrator Contact Info: AnnaMarie Bowen x5122

ATTACHMENTS:
Emergency Determination Form
Professional Services Agreement
COI

Item #: **25-0011**
Munis Contract #: 3250332
Emergency #: 50-M0087-24-EM158

CITY OF SANTA FE

PROFESSIONAL SERVICES CONTRACT

THIS CONTRACT is made and entered into by and between the City of Santa Fe, New Mexico, hereinafter referred to as the "City," and **Santa Fe Animal Shelter and Humane Society, Inc.**, hereinafter referred to as the "Contractor," and is effective as of the date set forth below upon which it is executed by the Parties.

RECITALS

WHEREAS, the Chief Procurement Officer of the City has made the determination that this Contract is in accordance with the provisions of the New Mexico Procurement Code (NMSA 1978, 13-1-28 et seq.) pursuant to NMSA 1978, Sections 13-1-127 and 13-1-128, and;

WHEREAS, the Contractor is one of such requisite and qualifications and is willing to engage with the City for professional services, in accordance with the terms and conditions hereinafter set out, and the Contractor understanding and consenting to the foregoing is willing to render such professional services as outlined in the Contract; and

The City and the Contractor hereby agree as follows:

1. Scope of Work

A. The City Shall:

1) Contact owners of animals collected by the City, as required by Section 5-7.1 SFCC 1987.
2) Mark all City Animal Services vehicles with a "City of Santa Fe" designation so as to identify and differentiate them from Contractor's vehicles. Only utilize personal protective equipment and supplies provided by the City of Santa Fe.
3) Complete in writing, information on the impound cards including the time and exact location at which the animal was impounded. At time of intake, it will be noted if the animal has been cited or will be issued an active citation such as "dangerous dog" or "vicious dog."
4) Regarding animal bite cases, supply upon intake, complete and sign a Bite Case Quarantine form, along with the regular impound card. If the owner of the animal is known and present at the time of impound, the form will be completed and signed by the owner. If the owner is known and is not present at the time of impound, the City will complete the form with the information, but without the signature.
5) The City assumes responsibility for expenses for any animal brought in by the City that requires services outside of the Contractor's regular business hours, scope of capability, or level of overnight care. Cases brought in after 4:30 PM may require transport and overnight care at a veterinary emergency facility, upon discretion of the Animal Services Officer with the City being responsible for expenses incurred. The City accepts the Contractor's business hours may be changed at the Contractor's discretion. Contractor will inform the City in writing at least ten (I 0) days before any such changes are implemented. In the event of delayed opening or early closing due to inclement weather, a manmade or natural disaster the Contractor shall

immediately inform the Animal Services Supervisor of the delayed opening or early closure.

6) During regular operating hours when summoned by the Contractor through the Santa Fe Police Dispatch Center, Animal Services Officers shall report to the Contractor's Facility to complete an impound or release of animals.
7) Deliver to the Contractor the remains of deceased animals for cremation disposal by the Contractor and pay the rate established cremation rate in l.B.15. The Animal Services Officer shall completely and legibly record each deceased animal on the City Carcass Log when placing an animal in the freezer.
8) The City reserves the right to utilize other vendors for veterinary care as needed.
9) The City reserves the right to utilize its own internal services when deemed appropriate.

B. The Contractor shall provide the following services for the City as requested by the city:

1) Comply with all provisions of law and regulations as set forth in Chapter "V" of SFCC 1987, pursuant to Section 5-11.1.B of the Animal Control Ordinance.
2) Operate and maintain an animal shelter as an animal housing facility for the benefit of the citizens of the City. Carry out all duties relating to rabid and biting animals, including, in the case of live animals, confining the animal and determining the immunization status, and in the case of dead animals, preparing and delivering such an animal to the New Mexico Department of Public Health or other approved facility in order that the department may arrange for laboratory determination of whether or not such animal is infected with rabies. All bite cases shall be reported to the City and the animal confined under supervision of the City.
3) Accept an average of ***one hundred ten*** (***110***) stray dogs, cats and other approved domestic small animals per month that are brought to the animal shelter by the City's Animal Services, provided these animals do not exhibit any symptoms of rabies or other dangerous disease. If the number of stray animals exceeds ***one hundred ten*** (***110)*** in a given month, the City will be billed separately at the Contractor's daily impound rate currently forty dollars ($40.00) per day, per animal.
4) All healthy feral cats (as determined by the Contractor) will be sterilized and returned to the location where they were found, delivered to another managed cat colony or considered for adoption.
5) Animals other than dogs and cats may be accepted by the animal shelter at the Contractor's exclusive discretion. Before other animals are accepted by the Contractor, the City must obtain explicit approval from the Contractor in each case. If the Contractor declines to accept these animals, the City will find housing for these animals other than the Contractor.
6) Hold all animals brought to the animal shelter by the City, which remain unclaimed, in accordance with the provisions as set forth in Section 5-7.1 SFCC 1987, unless for humane reasons, the Contractor's veterinarian determines that euthanasia is appropriate prior to that time. ***The date of impound counts as day one for City Impounded animals when calculating hold periods. After the expiration of the legal holding time, all animals become the property of the Contractor.***

7) Holds on animals beyond the legal stray holding time, including but not limited to animals held in the course of investigations, will be billed separately at the Contractor's daily impound rate, currently forty dollars ($40.00) per day, per animal. The Contractor reserves the right to refuse extended stays for animals whose quality of life is compromised or who cannot humanely be cared for in the Contractor's facility as determined by the Contractor.
8) The City may assign the Contractor to be responsible for licensing animals in the City of Santa Fe pursuant to Section 5-5.6 SFCC 1987 until the City makes the determination to assume sole responsibility for licensing animals in the City. Until such determination, the Contractor is responsible for licensing and the Contractor will incur all costs deemed necessary by the Contractor for such licensing and the City will allow Contractor to collect and retain all licensing fees and revenue. In addition, the Contractor shall provide all data related to licensing and fees to the City. Notice to the Contractor to be responsible for licensing or to provide notice to that the City will be solely responsible for licensing will be provided in writing. The City of Santa Fe retains the express right to determine the licensing fee.
9) Provide monthly status reports, as well as individual animal records to the City.
10) Collect and retain all animal boarding fees and costs.
11) Contractor will not be required to board beyond the stray hold period animals for impoundment from an Animal Services Officer, which the Animal Service Officer indicates are to be held as evidence in a pending legal proceeding such as a hoarding case or other criminal case. Contractor may accept such animals beyond the stray holding period on a case-by-case basis based on boarding availability.
12) When a representative of the City is not available during regular operating hours, the Contractor will complete the detailed intake documentation and accept a stray domestic animal found within the Santa Fe City limits by a person who is not the owner of the animal. Upon acceptance of the stray, the Contractor shall immediately contact the Santa Fe Police Dispatch Center and request the Animal Services Officer report to the Contractor's facility to complete the impound card and complete the impound process for the stray. The Contractor's acceptance and shelter of the stray will be confirmed by the Animal Services Officer and the stray will be counted toward the animals the Contractor is compensated for monthly in this contract.
13) If an owner of an impounded animal being held at the Contractor's facility under this contract wishes to retrieve their pet when a representative of the City is unavailable during regular operating hours, the Contractor shall immediately contact the Santa Fe Police Dispatch Center and request the Animal Services Officer report to the facility to complete the release of the animal.
14) Provide medical care under the direction and authority of the Contractor's licensed veterinarian. Decisions regarding all medical care, including the treatment of animals, rest with the Contractor's licensed veterinarian. Animals will not be euthanized within the animal holding period unless medically necessary. Decisions regarding medically necessary euthanasia of suffering animals impounded by the Animal Services Officer and being held at the Contractor's facility rest with the Contractor's licensed veterinarian. The Contractor shall notify the Animal Services Supervisor no later than the next business day of euthanasia or sedation of any animal administered prior to the completion of the hold period.
15) Be responsible for the storage and disposal by cremation of remains received from an Animal Services Officer (ASO) that are deceased upon arrival to the contractor's facility as per Article

1, paragraph A7. The agreed upon rate for disposal of remains by way of cremation is a flat rate of $100 per animal The Contractor shall provide and maintain a freezer on the premises for the appropriate storage of remains of deceased animals during the Stray Hold and remains identification period.

2. Standard of Performance; Licenses

A. The Contractor does hereby accept its designation as a professional service, rendering services related to Animal Services for the City, as set forth in this Contract. The Contractor represents that Contractor possesses the personnel, experience, and knowledge necessary to perform the services described under this Contract.

B. The Contractor agrees to obtain and maintain throughout the term of this Contract, all applicable professional and business licenses required by law, for itself, its employees, agents, representatives, and subcontractors.

3. Compensation

A. The City shall pay to the Contractor in full payment for services satisfactorily performed based on the per hour/per treatment costs listed in Attachment A. such compensation shall not exceed one hundred twenty eight thousand dollars ($128,000), including gross receipts tax. **The total amount payable to the Contractor under this Contract, including gross receipts tax and expenses, shall not exceed ($128,000.00).**

B. Payment. The total compensation under this Contract shall not exceed $128,000.00 including New Mexico gross receipts tax. **PLEASE NOTE NO PROPERTY TAX WILL BE PAID TO THE CONTRACTOR BY THE City. This amount is a maximum and not a guarantee that the work assigned to be performed by Contractor under this Contract shall equal the amount stated herein. The Parties do not intend for the Contractor to continue to provide Services without compensation when the total compensation amount is reached. Contractor is responsible for notifying the City when the Services provided under this Contract reach the total compensation amount. In no event will the Contractor be paid for Services provided in excess of the total compensation amount without this Contract being amended in writing prior to services, in excess of the total compensation amount being provided.**

C. Payment shall be made upon Acceptance of each Deliverable and upon the receipt and Acceptance of a detailed, certified Payment Invoice. Payment will be made to the Contractor's designated mailing address. In accordance with Section 13-1-158 NMSA 1978, payment shall be tendered to the Contractor within thirty (30) days of the date of written certification of Acceptance. All Payment Invoices MUST BE received by the City no later than fifteen (15) days after the termination of this Contract. Payment Invoices received after such date WILL NOT BE PAID.

D. **Notice of Extended Payment Provision For Grant Funded Contracts**. This contract allows the owner to make payment within 45 days after submission of an undisputed request for payment.

4. Term

THIS CONTRACT SHALL NOT BECOME EFFECTIVE UNTIL APPROVED BY THE CITY. This Contract shall terminate 6 months from date of signature unless terminated pursuant to paragraph 5 (Termination) and paragraph 6 (Appropriations).

5. Termination

A. Grounds. The City may terminate this Contract for convenience or cause. For contracts within their authority, the City Manager or their designee is authorized to provide the notice of termination, otherwise such notice of termination shall be provided by the Mayor or their designee as authorized by the Governing Body. The Contractor may only terminate this Contract based upon the City's uncured, material breach of this Contract.

B. Notice; City Opportunity to Cure.

1) The City shall give Contractor written notice of termination at least thirty (30) days prior to the intended date of termination.

2) Contractor shall give City written notice of termination at least thirty (30) days prior to the intended date of termination, which notice shall (i) identify all the City's material breaches of this Contract upon which the termination is based and (ii) state what the City must do to cure such material breaches. Contractor's notice of termination shall only be effective (i) if the City does not cure all material breaches within the thirty (30) day notice period or (ii) in the case of material breaches that cannot be cured within thirty (30) days, the City does not, within the thirty (30) day notice period, notify the Contractor of its intent to cure and begin with due diligence to cure the material breach.

3) Notwithstanding the foregoing, this Contract may be terminated immediately upon written notice to the Contractor (i) if the Contractor becomes unable to perform the services contracted for, as determined by the City; (ii) if, during the term of this Contract, the Contractor is suspended or debarred by the City; or (iii) the Contract is terminated pursuant to Paragraph 6, "Appropriations", of this Contract.

C. Liability. Except as otherwise expressly allowed or provided under this Contract, the City's sole liability upon termination shall be to pay for acceptable work performed prior to the Contractor's receipt or issuance of a notice of termination; provided, however, that a notice of termination shall not nullify or otherwise affect either party's liability for pre-termination defaults under or breaches of this Contract. The Contractor shall submit an invoice for such work within thirty (30) days of receiving or sending the notice of termination. *THIS PROVISION IS NOT EXCLUSIVE AND DOES NOT WAIVE THE CITY'S OTHER LEGAL RIGHTS AND REMEDIES CAUSED BY THE CONTRACTOR'S DEFAULT/BREACH OF THIS CONTRACT.*

6. Appropriations

The terms of this Contract are contingent upon sufficient appropriations and authorization being made by the Governing Body for the performance of this Contract. If sufficient appropriations and authorization are not made by the Governing Body, this Contract shall terminate immediately upon written notice being given by the City to the Contractor. The City's decision as to whether sufficient appropriations are available shall be accepted by the Contractor and shall be final. If the City proposes an amendment to the Contract to unilaterally reduce funding, the Contractor shall have the option to terminate the Contract or to agree to the reduced funding, within thirty (30) days of receipt of the proposed amendment.

7. Status of Contractor

The Contractor and its agents and employees are independent contractors performing professional services for the City and are not employees of the City. The Contractor and its agents and employees shall not accrue leave, retirement, insurance, bonding, use of City vehicles, or any other benefits afforded to employees of the

City as a result of this Contract. The Contractor acknowledges that all sums received hereunder are reportable by the Contractor for tax purposes, including without limitation, self-employment and business income tax. The Contractor agrees not to purport to bind the City unless the Contractor has express written authority to do so, and then only within the strict limits of that authority.

8. Assignment

The Contractor shall not assign or transfer any interest in this Contract or assign any claims for money due or to become due under this Contract without the prior written approval of the City.

9. Subcontracting

The Contractor shall not subcontract any portion of the services to be performed under this Contract without the prior written approval of the City. No such subcontract shall relieve the primary Contractor from its obligations and liabilities under this Contract, nor shall any subcontract obligate direct payment from the City.

10. Release

Final payment of the amounts due under this Contract shall operate as a release of the City, its officers and employees from all liabilities, claims and obligations whatsoever arising from or under this Contract.

11. Confidentiality

Any confidential information provided to or developed by the Contractor in the performance of this Contract shall be kept confidential and shall not be made available to any individual or organization by the Contractor without the prior written approval of the City.

12. Product of Service -- Copyright

All materials developed or acquired by the Contractor under this Contract shall become the property of the City and shall be delivered to the City no later than the termination date of this Contract. Nothing developed or produced, in whole or in part, by the Contractor under this Contract shall be the subject of an application for copyright or other claim of ownership by or on behalf of the Contractor.

13. Conflict of Interest; Governmental Conduct Act

A. The Contractor represents and warrants that it presently has no interest and, during the term of this Contract, shall not acquire any interest, direct or indirect, which would conflict in any manner or degree with the performance or services required under the Contract.

B. The Contractor further represents and warrants that it has complied with, and, during the term of this Contract, will continue to comply with, and that this Contract complies with all applicable provisions of the Governmental Conduct Act, Chapter 10, Article 16 NMSA 1978.

C. Contractor's representations and warranties in Paragraphs A and B of this Article are material representations of fact upon which the City relied when this Contract was entered into by the parties. Contractor shall provide immediate written notice to the City if, at any time during the term of this Contract, Contractor learns that Contractor's representations and warranties in Paragraphs A and B of this Article were erroneous on the effective date of this Contract or have become erroneous by reason of new or changed circumstances. If it is later determined that Contractor's representations and warranties in Paragraphs A and B of this Article were erroneous on the effective date of this Contract or have become erroneous by reason of new or changed circumstances, in addition to other remedies available to the City

and notwithstanding anything in the Contract to the contrary, the City may immediately terminate the Contract.

D. All terms defined in the Governmental Conduct Act have the same meaning in this section.

14. Amendment

A. This Contract shall not be altered, changed, or amended except by instrument in writing executed by the parties hereto and all other required signatories.

B. If the City proposes an amendment to the Contract to unilaterally reduce funding due to budget or other considerations, the Contractor shall, within thirty (30) days of receipt of the proposed Amendment, have the option to terminate the Contract, pursuant to the termination provisions as set forth in Article 4 herein, or to agree to the reduced funding.

15. Entire Agreement.

This Contract, together with any other documents incorporated herein by reference and all related Exhibits and Schedules constitutes the sole and entire contract of the Parties with respect to the subject matter of this Contract, and supersedes all prior and contemporaneous understandings, agreements, representations, and warranties, both written and oral, with respect to the subject matter. In the event of any inconsistency between the statements in the body of this Contract, and the related Exhibits and Schedules, the statements in the body of this Contract shall control.

16. Merger

This Contract incorporates all the Agreements, covenants and understandings between the parties hereto concerning the subject matter hereof, and all such covenants, agreements, and understandings have been merged into this written contract.

This contract is a result of emergency procurement 50-M0087-24-.

No prior Agreement or understanding, oral or otherwise, of the parties or their agents shall be valid or enforceable unless embodied in this Contract.

17. Penalties for violation of law

NMSA 1978, sections 13-1-28 through 13-1-199, imposes civil and criminal penalties for its violation. In addition, the New Mexico criminal statutes impose felony penalties for illegal bribes, gratuities, and kickbacks.

18. Equal Opportunity Compliance

The Contractor agrees to abide by all federal and state laws and rules and regulations, and Santa Fe City Code, pertaining to equal employment opportunity. In accordance with all such laws of the State of New Mexico, the Contractor assures that no person in the United States shall, on the grounds of race, religion, color, national origin, ancestry, sex, age, physical or mental handicap, or serious medical condition, spousal affiliation, sexual orientation or gender identity, be excluded from employment with or participation in, be denied the benefits of, or be otherwise subjected to discrimination under any program or activity performed under this Contract. If Contractor is found not to be in compliance with these requirements during the life of this Contract, Contractor agrees to take appropriate steps to correct these deficiencies.

19. Applicable Law

The laws of the State of New Mexico shall govern this Contract, without giving effect to its choice of law provisions. Venue shall be proper only in a New Mexico court of competent jurisdiction in accordance with

NMSA 1978, section 38-3-2. By execution of this Contract, Contractor acknowledges and agrees to the jurisdiction of the courts of the State of New Mexico over any and all lawsuits arising under or out of any term of this Contract.

20. Workers Compensation

The Contractor agrees to comply with state laws and rules applicable to workers compensation benefits for its employees. If the Contractor fails to comply with the Workers Compensation Act and applicable rules when required to do so, this Contract may be terminated by the City.

21. Professional Liability Insurance

Contractor shall maintain professional liability insurance throughout the term of this Contract providing a minimum coverage in the amount required under the New Mexico Tort Claims Act. The Contractor shall furnish the City with proof of insurance of Contractor's compliance with the provisions of this section as a condition prior to performing services under this Contract.

22. Other Insurance

If the services contemplated under this Contract will be performed on or in City facilities or property, Contractor shall maintain in force during the entire term of this Contract, the following insurance coverage(s), naming the City as additional insured.

A. **Commercial General Liability** insurance shall be written on an occurrence basis and be a broad as ISO Form CG 00 01 with limits not less than $2,000,000 per occurrence and $2,000,000 in the aggregate for claims against bodily injury, personal and advertising injury, and property damage. Said policy shall include broad form Contractual Liability coverage and be endorsed to name the City of Santa Fe their officials, officers, employees, and agents as additional insureds.

B. **Business Automobile Liability** insurance for all owned, non-owned automobiles, with a combined single limit not less than $1,000,000 per accident.

C. **Broader Coverage and Limits**. The insurance requirements under this Contract shall be the greater of (1) the minimum coverage and limits specified in this Contract, or (2) the broader coverage and maximum limits of coverage of any insurance policy or proceeds available to the Named Insured. It is agreed that these insurance requirements shall not in any way act to reduce coverage that is broader or that includes higher limits than the minimums required herein. No representation is made that the minimum insurance requirements of this Contract are sufficient to cover the obligations of Contractor hereunder.

D. Contractor shall maintain the above insurance for the term of this Contract and name the City as an additional insured and provide for 30 days cancellation notice on any Certificate of Insurance form furnished by Contractor. Such certificate shall also specifically state the coverage provided under the policy is primary over any other valid and collectible insurance and provide a waiver of subrogation.

23. Records and Financial Audit

The Contractor shall maintain detailed time and expenditure records that indicate the date; time, nature and cost of services rendered during the Contract's term and effect and retain them for a period of three (3) years from the date of final payment under this Contract. The records shall be subject to inspection by the City. The

City shall have the right to audit billings both before and after payment. Payment under this Contract shall not foreclose the right of the City to recover excessive or illegal payments.

24. Indemnification

The Contractor shall defend, indemnify and hold harmless the City from all actions, proceeding, claims, demands, costs, damages, attorneys' fees and all other liabilities and expenses of any kind from any source which may arise out of the performance of this Contract, caused by the negligent act or failure to act of the Contractor, its officers, employees, servants, subcontractors or agents, or if caused by the actions of any client of the Contractor resulting in injury or damage to persons or property during the time when the Contractor or any officer, agent, employee, servant or subcontractor thereof has or is performing services pursuant to this Contract. If any action, suit or proceeding related to the services performed by the Contractor or any officer, agent, employee, servant or subcontractor under this Contract is brought against the Contractor, the Contractor shall, as soon as practicable but no later than two (2) days after it receives notice thereof, notify the legal counsel of the City.

25. New Mexico Tort Claims Act

Any liability incurred by the City of Santa Fe in connection with this Contract is subject to the immunities and limitations of the New Mexico Tort Claims Act, Section 41-4-1, et. seq. NMSA 1978, as amended. The City and its "public employees" as defined in the New Mexico Tort Claims Act, do not waive sovereign immunity, do not waive any defense and do not waive any limitation of liability pursuant to law. No provision in this Contract modifies or waives any provision of the New Mexico Tort Claims Act.

26. Invalid Term or Condition

If any term or condition of this Contract shall be held invalid or unenforceable, the remainder of this Contract shall not be affected and shall be valid and enforceable.

27. Enforcement of Contract

A party's failure to require strict performance of any provision of this Contract shall not waive or diminish that party's right thereafter to demand strict compliance with that or any other provision. No waiver by a party of any of its rights under this Contract shall be effective unless express and in writing, and no effective waiver by a party of any of its rights shall be effective to waive any other rights.

28. Notices

Any notice required to be given to either party by this Contract shall be in writing and shall be delivered in person, by courier service or by U.S. mail, either first class or certified, return receipt requested, postage prepaid, as follows:

To the City: Paul Joye, Chief of Police, 2515 Camino Entrada, pmjoye@santafenm.gov

To the Contractor: Santa Fe Animal Shelter & Human Society, 100 Caja Del Rio
finances@SFhumanesociety.org

29. Authority

If Contractor is other than a natural person, the individual(s) signing this Contract on behalf of Contractor represents and warrants that he or she has the power and authority to bind Contractor, and that no further action, resolution, or approval from Contractor is necessary to enter a binding contract.

30. Non-Collusion

In signing this Contract, the Contractor certifies the Contractor has not, either directly or indirectly, entered into action in restraint of free competitive bidding in connection with this offer submitted to the City's Chief Procurement Officer.

31. Default/Breach

In case of Default and/or Breach by the Contractor, for any reason whatsoever, the City may procure the goods or services from another source and hold the Contractor responsible for any resulting excess costs and/or damages, including but not limited to, direct damages, indirect damages, consequential damages, special damages, and the City may also seek all other remedies under the terms of this Contract and under law or equity.

32. Equitable Remedies

The Contractor acknowledges that its failure to comply with any provision of paragraph 1.B of this Contract may cause the City irrevocable harm and that a remedy at law for such a failure might be an inadequate remedy for the City, and the Contractor consents to the City 's requesting from a court of competent jurisdiction, specific performance, or injunction, or any other equitable relief in order to enforce such compliance. The City's rights to seek equitable relief pursuant to this Contract shall be in addition to, and not in lieu of, any other remedy that the City may have under applicable law, including, but not limited to, monetary damages.

33. Default and Force Majeure

The City reserves the right to cancel all, or any part of any orders placed under this Contract without cost to the City, if the Contractor fails to meet the provisions of this Contract and, except as otherwise provided herein, to hold the Contractor liable for any excess cost occasioned by the City due to the Contractor's default. The Contractor shall not be liable for any excess costs if failure to perform the order arises out of causes beyond the control and without the fault or negligence of the Contractor; such causes include, but are not restricted to, acts of God or the public enemy, acts of the State or Federal Government, fires, floods, epidemics, quarantine restrictions, strikes, freight embargoes, unusually severe weather and defaults of subcontractors due to any of the above, unless the City shall determine that the supplies or services to be furnished by the subcontractor were obtainable from other sources in sufficient time to permit the Contractor to meet the required delivery scheduled. The rights and remedies of the City provided in this Clause shall not be exclusive and are in addition to any other rights now being provided by law or under this Contract.

IN WITNESS WHEREOF, the Parties have executed this Contract as of the date of the signature by the required approval authorities below.

CITY OF SANTA FE:

Randy Randall (Jan 14, 2025 08:10 MST)

Randy Randall, Interim City Manager

DATE: Jan 14, 2025

CONTRACTOR:
Santa Fe Animal Shelter and Humane Society, Inc.

Jacqueline Roach (Jan 3, 2025 14:56 MST)

Jackie Roach, Chief Executive Officer

DATE: Jan 3, 2025

NMBTIN#: _____

ATTEST:

ANDREA SALAZAR (Jan [illegible], 2025 14:39 MST)

Andréa Salazar, City Clerk

CITY ATTORNEY'S OFFICE:

Christopher W. ryan (Jan 3, 2025 15:15 MST)

Senior Assistant City Attorney

APPROVED FOR FINANCES:

Emily K. Oster

Emily Oster, Finance Director

Attachment A

Canine Spay: $250
Canine Neuter: $200
Feline Spay/Neuter: $150

Vaccines: 1 year and boosters are $15 per application (Felines get FVRCP and Rabies, Dogs get DAPP, Bordetella, Rabies depending on age and known medical the number of applications varies by the individual, for our average intake it is 4x applications for dogs 3x for cats)

Microchip Implantation $15

Flea/Tick Preventative and Deworming varies by animal weight but for our average intake $10 each, 3 total applications in an animal's stay with us (2x deworm 1x flea/tick).

Daily Boarding to City is$45.90/day
If Medical Care is necessary, the City's Daily Cost of Care is $78.38/day

Cremation:

- Small mammals (pocket pets), fish, reptiles, birds - $15
- Companion Animals - $100

Emergency Medical Fees are variable by procedure/treatment, there are 32 line items ranging from $5 to $185 with an open cost for lab work that has to be sent to Albuquerque.

City of Santa Fe
Emergency Determination Form

The emergency procurement method may only be used as described in NMSA 1978, Section 13-1-127 and in the City's Procurement Manual XII.

The Department that makes an emergency procurement to plan or prepare for the response to a serious threat to public health, welfare, safety or property caused by a flood, fire, epidemic, riot, act of terrorism, equipment failure or similar event shall account for the money spent in making the procurement and report on that accounting to the City's Finance Department Director within ninety days after the end of the contract or fiscal year in which the procurement was made, whichever comes first.

I. City Contact Info:

Department: **Police, City of Santa Fe**
Department Director: **Paul Joye, Police Chief**
Department Contact: **Tara King**
Department Telephone Number: **(505) 955-5004**
City of SF Chief Procurement Officer: **Travis Dutton-Leyda, CPO**
Telephone Number: **(505) 629-8351**

II. Contractors' Information:

1. **Loving Care Cremation**
   - **Services**: Pet cremation services, including individual, and communal cremation options.
   - **Contact Information**:
     - **Phone**: (505) 466-6034
     - **Address**: 8A Old Las Vegas Hwy, Santa Fe, NM 87505

2. **Mosaic Animal Emergency & Specialty**
   - **Services**: Emergency veterinary care, specialty services, and advanced diagnostics.
   - **Contact Information**:
     - **Phone**: (505) 216-0606
     - **Address**: 20 Bisbee Ct, Santa Fe, NM 87508

3. **Roadrunner Veterinary Emergency & Specialty Hospital**
   - **Services**: Emergency and specialty veterinary care; surgery and diagnostic services.
     - **Address:** 5 Camino Karsten, Algodones, NM 87001

- **Phone:** (505) 345-2322

4. **Santa Fe Animal Shelter & Humane Society**
   - **Services**: Animal sheltering, adoption, veterinary services, and public outreach.
   - **Contact Information**:
     - **Address**: 100 Caja del Rio Road, Santa Fe, NM 87507
     - **Phone**: (505) 983-4309

5. **Top Dog Pet Resort**
   - **Services**: Pet daycare, grooming, boarding, and specialty services.
   - **Contact Information**:
     - **Address**: 100 Sun Ave, Santa Fe, NM 87505
     - **Phone**: (505) 982-6080

III. **Term of prospective contract: Up to 6 months**

IV. **Amount of prospective contract: Two hundred thousand dollars ($200,000.00)**

V. **Location of Services: Throughout the City of Santa Fe**

VI. **Please thoroughly list the services (scope of work), construction or items of tangible personal property of the contract:**

Scope of Work for Animal Services Contract

The contracted provider will perform the following services to support the City of Santa Fe in meeting its urgent animal welfare, public health, and compliance needs. The contractor must ensure adherence to all applicable city ordinances, particularly SFCC 1987 Chapter V, Animal Control Ordinances, and provide consistent, humane, and timely care for animals under the city's jurisdiction. **The contractor shall comply with all provisions of law and regulations as set forth in Chapter V of SFCC 1987, pursuant to Section 5-11.1.B of the Animal Control Ordinance.**

1. Shelter Operations and Animal Care

- **Facility Management**: Operate a safe, sanitary, and fully staffed animal shelter as a housing facility to care for and shelter stray, abandoned, or seized animals.
- **Intake and Animal Control**: Accept animals brought by the City's Animal Services Officers, including stray, injured, or surrendered animals. Provide adequate housing, food, and care.
- **Quarantine and Rabies Control**: Confine and manage animals involved in bite incidents or suspected rabies cases. Report and deliver deceased animals as required for rabies testing.
- **Feral Cat Management**: Assess feral cats and, if healthy, provide sterilization before releasing them back to their original location or finding suitable alternative placements.
- **Holding Period Compliance**: Retain animals during the legally mandated holding period, transferring ownership to the shelter upon the hold's expiration unless other arrangements are specified by law.

2. Veterinary Care

- **Routine and Emergency Medical Services**: Provide veterinary evaluations, vaccinations, routine treatments, and emergency medical care as necessary to ensure animal welfare.
- **Veterinary Oversight**: Ensure that all medical care decisions, including euthanasia, are made by a licensed veterinarian. Euthanize animals only when medically necessary and notify the City of such actions.

3. Licensing and Public Health Compliance

- **Licensing**: Oversee pet licensing processes in alignment with city regulations. Collect and retain licensing fees, maintaining records and providing the City with access as needed.
- **Public Health Reporting**: Coordinate with health authorities, including the New Mexico Department of Public Health, on communicable diseases or incidents affecting public safety.

4. Storage and Disposal of Remains

- **Storage of Deceased Animals**: Maintain appropriate facilities (e.g., freezers) for storing the remains of deceased animals received from Animal Services Officers.
- **Cremation Services**: Provide timely and humane disposal of animal remains through cremation, ensuring environmental and public health compliance.

5. Administrative and Reporting Responsibilities

- **Detailed Documentation and Reporting**: Maintain records for each animal, including intake, care, medical treatment, and final disposition. Submit monthly status reports to the City, summarizing shelter activities and public health-related incidents.
- **Collaboration with City Representatives**: Work with city representatives to manage intake processes when city staff are unavailable and handle the release of impounded animals to owners outside regular operating hours.

VII. **Provide an explanation for the justification of the procurement including a description of the emergency condition(s) requiring use of emergency procurement and the practicable competition utilized in compliance with NMSA 1978, Section 13-1-127.**

The emergency procurement for animal services in Santa Fe is justified due to the immediate need for continued animal shelter operations, veterinary care, and compliance with public health regulations. The city's ability to care for stray, injured, and abandoned animals is essential for public safety and animal welfare. Without an established vendor, Santa Fe faces risks, including:

1. Public Health Risks: Managing rabid or diseased animals is critical to prevent the spread of diseases like rabies. The inability to quarantine, vaccinate, or euthanize animals as necessary could pose a health risk to the community.
2. Legal and Regulatory Compliance: The city is mandated to uphold Chapter V of the Santa Fe City Code, which outlines strict requirements for shelter operations, animal handling, and licensing. Failure to comply could lead to legal repercussions and public safety risks.

3. Immediate Animal Welfare Concerns: Without shelter and veterinary care, the city cannot meet basic animal welfare needs. This would likely lead to overcrowding in temporary holding facilities, inability to provide adequate care, and compromised humane treatment for animals.

4. Practicable Competition: In compliance with NMSA 1978, Section 13-1-127, an expedited yet practicable competitive process was utilized. Potential service providers within a reasonable distance of Santa Fe were considered, ensuring that the selected vendor meets city requirements and can initiate services without delay.

This emergency procurement process enables the city to fulfill essential animal services swiftly and within compliance, ensuring safety, welfare, and public health for the residents of Santa Fe.

VIII. **Please describe what measures are being taken to minimize the duration and effect of this emergency procurement (for example: is the emergency only in place until a competitive process can be completed, etc.).**

Measures to Minimize Duration and Impact of Emergency Procurement

This emergency procurement is structured as a temporary solution to address the city's immediate need for animal services. To ensure it is in place only as long as necessary, the following measures are being taken:

1. Transition Plan to Competitive Procurement: The emergency contract will remain active only until a standard competitive procurement process can be completed. The city is actively preparing the necessary documents to initiate a formal Request for Proposals (RFP) to secure long-term service providers through a competitive, transparent process.

2. Short-Term Contract with Defined Limits: The emergency procurement has clear limits in scope and duration to minimize dependency. The city has restricted services to the most critical functions, such as shelter operations, veterinary care, and public health compliance, essential for public safety and animal welfare.

3. Monitoring and Evaluation: The city will monitor the contractor's performance under the emergency contract, using this data to refine service requirements and improve the competitive bidding process. Monthly status reports from the contractor will ensure oversight and facilitate a smoother transition to long-term providers.

These measures are intended to minimize both the impact and duration of the emergency contract, ensuring that the city's animal services can return to a competitively bid, stable solution as soon as possible.

IX. **Describe what measures the Department will take in the future to prevent/mitigate use of emergency procurement under similar circumstances.**

To prevent or mitigate the need for emergency procurements in similar situations, the Department will take the following proactive steps:

1. Immediate RFP Process: The Department will issue a Request for Proposals (RFP) as soon as possible to secure long-term, competitively bid contracts for essential animal services. This proactive approach will reduce reliance on short-term emergency measures.

2. Advanced Contract Planning: In the future, the Department will implement advanced planning for contract renewals and potential vendor changes. This will include monitoring contract timelines and setting internal reminders to initiate competitive bidding well before contract expiration dates.

3. Contingency Partnerships: The Department will work to establish contingency agreements with additional animal service providers to ensure a rapid response in the event of vendor loss or service disruption. By having alternative providers identified, the Department can reduce delays and maintain service continuity.

4. Regular Market Assessments: Conducting periodic market assessments will help identify qualified vendors within the region, ensuring that the city has a pool of providers ready to respond to an RFP, if needed. This process will also aid in securing providers who meet the city's specific needs, reducing the likelihood of service disruptions.

By taking these steps, the Department aims to enhance preparedness and reduce reliance on emergency procurement, securing uninterrupted, compliant, and humane animal services for the City of Santa Fe.

Certified by:

City Chief Procurement Officer, Travis Dutton-Leyda — **Date** Nov 14, 2024

City Approval by:

Paul Joye (Nov 14, 2024 16:31 MST)

Department Director, Paul Joye, Police Chief — **Date** Nov 14, 2024

City Attorney, Erin McSherry — **Date** Nov 14, 2024

Randy Randall (Nov 14, 2024 16:45 MST)

Interim City Manager, Randy Randall — **Date** Nov 14, 2024

Emily K. Oster

Finance Director, Emily Oster — **Date** Nov 14, 2024

Note: All emergencies must be posted to the SPD website:
https://www.generalservices.state.nm.us/statepurchasing/submit-emergency.aspx
and the City of Santa Fe's website:
https://santafenm.gov/finance-2/purchasing-1/solicitations

CERTIFICATE OF LIABILITY INSURANCE

DATE (MM/DD/YYYY): 7/7/2025

THIS CERTIFICATE IS ISSUED AS A MATTER OF INFORMATION ONLY AND CONFERS NO RIGHTS UPON THE CERTIFICATE HOLDER. THIS CERTIFICATE DOES NOT AFFIRMATIVELY OR NEGATIVELY AMEND, EXTEND OR ALTER THE COVERAGE AFFORDED BY THE POLICIES BELOW. THIS CERTIFICATE OF INSURANCE DOES NOT CONSTITUTE A CONTRACT BETWEEN THE ISSUING INSURER(S), AUTHORIZED REPRESENTATIVE OR PRODUCER, AND THE CERTIFICATE HOLDER.

IMPORTANT: If the certificate holder is an ADDITIONAL INSURED, the policy(ies) must have ADDITIONAL INSURED provisions or be endorsed. If SUBROGATION IS WAIVED, subject to the terms and conditions of the policy, certain policies may require an endorsement. A statement on this certificate does not confer rights to the certificate holder in lieu of such endorsement(s).

PRODUCER Inszone Insurance Services, LLC 2721 Citrus Road, Suite A Rancho Cordova CA 95742 License#: 0F82764	**CONTACT NAME:** Lauren Hemphill **PHONE (A/C, No, Ext):** 877-308-9663 **FAX (A/C, No):** 916-503-6271 **E-MAIL ADDRESS:** info@inszoneins.com
INSURED SANTA FE ANIMAL SHELTER 100 Caja Del Rio Rd. Santa Fe NM 87507 SANTFEA-03	**INSURER(S) AFFORDING COVERAGE** / **NAIC #** **INSURER A :** Cincinnati Insurance Company — 10677 **INSURER B :** New Mexico Southwest Casualty Company — 10207 **INSURER C :** **INSURER D :** **INSURER E :** **INSURER F :**

COVERAGES **CERTIFICATE NUMBER:** 1127849719 **REVISION NUMBER:**

THIS IS TO CERTIFY THAT THE POLICIES OF INSURANCE LISTED BELOW HAVE BEEN ISSUED TO THE INSURED NAMED ABOVE FOR THE POLICY PERIOD INDICATED. NOTWITHSTANDING ANY REQUIREMENT, TERM OR CONDITION OF ANY CONTRACT OR OTHER DOCUMENT WITH RESPECT TO WHICH THIS CERTIFICATE MAY BE ISSUED OR MAY PERTAIN, THE INSURANCE AFFORDED BY THE POLICIES DESCRIBED HEREIN IS SUBJECT TO ALL THE TERMS, EXCLUSIONS AND CONDITIONS OF SUCH POLICIES. LIMITS SHOWN MAY HAVE BEEN REDUCED BY PAID CLAIMS.

INSR LTR	TYPE OF INSURANCE	ADDL INSD	SUBR WVD	POLICY NUMBER	POLICY EFF (MM/DD/YYYY)	POLICY EXP (MM/DD/YYYY)	LIMITS	
A	X **COMMERCIAL GENERAL LIABILITY** CLAIMS-MADE X OCCUR GEN'L AGGREGATE LIMIT APPLIES PER: POLICY PRO-JECT LOC OTHER:			EPP 047 30 60	1/31/2025	1/31/2026	EACH OCCURRENCE DAMAGE TO RENTED PREMISES (Ea occurrence) MED EXP (Any one person) PERSONAL & ADV INJURY GENERAL AGGREGATE PRODUCTS - COMP/OP AGG	$ 1,000,000 $ 500,000 $ 5,000 $ 1,000,000 $ 2,000,000 $ 2,000,000
A	**AUTOMOBILE LIABILITY** ANY AUTO OWNED AUTOS ONLY X SCHEDULED AUTOS X HIRED AUTOS ONLY X NON-OWNED AUTOS ONLY			EBA 047 30 60	1/31/2025	1/31/2026	COMBINED SINGLE LIMIT (Ea accident) BODILY INJURY (Per person) BODILY INJURY (Per accident) PROPERTY DAMAGE (Per accident)	$ 1,000,000 $ $ $
A	X **UMBRELLA LIAB** X OCCUR **EXCESS LIAB** CLAIMS-MADE DED RETENTION $			EPP 047 30 60	1/31/2025	1/31/2026	EACH OCCURRENCE AGGREGATE	$ 4,000,000 $
B	**WORKERS COMPENSATION AND EMPLOYERS' LIABILITY** ANYPROPRIETOR/PARTNER/EXECUTIVE OFFICER/MEMBER EXCLUDED? Y / N **(Mandatory in NH)** If yes, describe under DESCRIPTION OF OPERATIONS below	N / A		26.136	1/31/2025	1/31/2026	X PER STATUTE OTH-ER E.L. EACH ACCIDENT E.L. DISEASE - EA EMPLOYEE E.L. DISEASE - POLICY LIMIT	 $ 1,000,000 $ 1,000,000 $ 1,000,000

DESCRIPTION OF OPERATIONS / LOCATIONS / VEHICLES (ACORD 101, Additional Remarks Schedule, may be attached if more space is required)

CERTIFICATE HOLDER

City of Santa Fe
200 Lincoln Ave
Santa Fe NM 87501

CANCELLATION

SHOULD ANY OF THE ABOVE DESCRIBED POLICIES BE CANCELLED BEFORE THE EXPIRATION DATE THEREOF, NOTICE WILL BE DELIVERED IN ACCORDANCE WITH THE POLICY PROVISIONS.

AUTHORIZED REPRESENTATIVE

© 1988-2015 ACORD CORPORATION. All rights reserved.

CITY OF SANTA FE

The Purchasing Memo

Date: January 14, 2026

To: Governing Body, Finance Committee, and Quality of Life Committee

Via: Thomas Grundler, Interim Chief of Police THOMAS GRUNDLER THOMAS GRUNDLER (Jan 14, 2026 16:41:09 MST)

From: Ben Valdez, Deputy Chief of Police B. Valdez, DC B. Valdez, DC (Jan 14, 2026 13:58:26 MST)

Subject: Extension of Animal Shelter Contract/ Professional Services Agreement Amendment #3

Vendor Name: Santa Fe Animal Shelter and Humane Society

Munis Vendor Number: 1521

ITEM AND ISSUE:

The Police Department respectfully requests your review and approval of Amendment #3 to Contract #3250332 with Santa Fe Animal Shelter for animal boarding and care services. Amendment #3 increases the amount of compensation by $136,800 not to exceed, for a total contract amount of $567,089 and extends the term by an additional three months.

CONTRACT NUMBER:

The FY25 Munis contract number is 3250332.

BACKGROUND AND SUMMARY:

The original contract, City Clerk's #25-0011, was executed on January 14, 2025, as an emergency agreement. During the contract term, a Request for Proposals (RFP) was issued and remains under evaluation. Amendment #1, executed on August 8, 2025, increased the contract compensation by $150,000 and extended the term by six months, establishing a new expiration date of February 5, 2026. At this time, negotiations between the City of Santa Fe and the Animal Shelter are still ongoing, and a final agreement has not yet been reached. Amendment #2, executed on December 16, 2025, increased the compensation by $152,289. This additional time will allow us to complete the rfp process, finalize a contract and present to Governing Body for approval.

PRIOR APPROVALS AND SUPPORTING INFORMATION:

FUNDING SOURCE:

Fund Name/Number: Law Enforcement/223

Munis Org Name/Number: Police Administration/2230310

Munis Object Name/Number: Service Contracts/510310

Budget Officer / Designee: Andy Hopkins **Date:** 01/15/2026

Budget Officer Comment/Exceptions: _____

PROCUREMENT METHOD:

The procurement method used was NMSA 1978, Section 13-1-127, Emergency

Emergency #50-M0087-24-EM158

Chief Procurement Officer (CPO)/Designee: _____ **Date:** 01/15/2026

CPO Comment/Exceptions: _____

ASSOCIATED APPROVALS:

IT Components included? ☐ Yes | ☒ No

Approval: _____ **Title:** _____ **Date:** _____

Comment/Exceptions: _____

Treasury/Point of Sale Components included? ☐ Yes | ☒ No

Approval: _____ **Title:** _____ **Date:** _____

Comment/Exceptions: _____

Vehicles included? ☐ Yes | ☒ No

Approval: _____ **Title:** _____ **Date:** _____

Comment/Exceptions: _____

Construction to City Facilities, Furniture, and/or Fixtures included? ☐ Yes | ☒ No

Approval: _____ **Title:** _____ **Date:** _____

Comment/Exceptions: _____

Is this an externally funded purchase? ☐ Yes | ☒ No

If yes, what is the issuing agency: _____

Approval: _____ **Title:** _____ **Date:** _____

Comment/Exceptions: _____

Is this a Capital Asset or Project? ☐ Yes | ☒ No

Project Ledger Number: _____

Approval: _____ **Title:** _____ **Date:** _____

Comment/Exceptions: _____

ATTACHMENTS:

Procurement document: Emergency Determination
Original contract packet (with previous contract amendment #1 and #2)
Contract Amendment #3

Item #: _____
Munis Contract #: __3250332____
Original Contract Item #: ___25-0011____
SWPA/GSA/Coop/RFP/ITB #: Emergency #50-M0087-24-EM158_

CITY OF SANTA FE, POLICE DEPARTMENT]
AMENDMENT No. 3 TO
Contract # 3250332

Santa Fe Animal Shelter Services Contract

This AMENDMENT No. 3 (the "Amendment") amends the CITY OF SANTA FE CONTRACT, dated January 14, 2025 (the "Contract"), between the City of Santa Fe (the "City") and Santa Fe Animal Shelter and Humane Society, Inc. (the "Contractor"). The date of this Amendment shall be the date when it is executed by the City and the Contractor whichever occurs last.

RECITALS:

A. Under the terms of the Contract, Contractor has agreed to provide the City professional services, in accordance with the terms and conditions hereinafter set out, and the Contractor understanding and consenting to the foregoing is willing to render such professional services as outlined in the Contract.

B. Pursuant to Article 14 of the Contract, and for good and valuable consideration, the receipt and sufficiency of which are acknowledged by the parties, the City and the Contractor agree as follows:

1. COMPENSATION.

Article 3, paragraph A of the Contract is amended to increase the amount of compensation by a total of $136,800 so that Article 3, paragraph A reads in its entirety as follows:

> A. The City shall pay to the Contractor in full payment for services satisfactorily performed based on the per hour/per treatment costs listed in Attachment A. Such compensation shall not exceed five hundred sixty-seven thousand eighty-nine dollars ($567,089), including gross receipts tax. **The total amount payable to the Contractor under this Contract, including gross receipts, tax and expenses, shall not exceed ($567,089).**

2. TERM:

Article 4 of the Contract is hereby deleted in its entirety and substitute the following Article 4 in its place:

THIS CONTRACT SHALL NOT BECOME EFFECTIVE UNTIL APPROVED BY THE CITY. This Contract shall terminate 3 months from the date of signature unless terminated pursuant to paragraph 5 (Termination) and paragraph 6 (Appropriations).

3. CONTRACT IN FULL FORCE.

Except as specifically provided in this Amendment, the Contract remains and shall remain in full force and effect, in accordance with its terms.

[REMAINDER OF PAGE INTENTIONALLY LEFT BLANK]

[SIGNATURE PAGE TO FOLLOW]

IN WITNESS WHEREOF, the parties have executed this Amendment No. 3 to the Contract as of the dates set forth below.

CITY OF SANTA FE:

_____
MICHAEL GARCIA, MAYOR

DATE:_____

CONTRACTOR:

Jackie Roach
JACKIE ROACH

CEO
TITLE

DATE: Jan 15, 2026
NMBTIN: _____

ATTEST:

_____
CITY CLERK

CITY ATTORNEY'S OFFICE:

Christopher W. Ryan
Christopher W. Ryan (Jan 15, 2026 15:16:34 MST)
CHRIS RYAN, SENIOR ASSISTANT CITY ATTORNEY

APPROVED FOR FINANCES:

BRIAN MOYA
FINANCE DIRECTOR

CITY OF SANTA FE

The Purchasing Memo

Date: October 21, 2025

To: Governing Body, Finance Committee, and Quality of Life Committee

Via: Paul Joye, Chief of Police Paul Joye (Oct 21, 2025 14:04:25 MDT)

From: Ben Valdez, Deputy Chief of Police B. Valdez, DC (Oct 21, 2025 13:51:39 MDT)

Subject: Extension of Animal Shelter Contract/ Professional Services Agreement

Vendor Name: Santa Fe Animal Shelter and Humane Society

Munis Vendor Number: 1521

ITEM AND ISSUE:

The Police Department respectfully requests your review and approval of Amendment #2 to Contract #3250332 with Santa Fe Animal Shelter for animal boarding and care services. Amendment #2 increases the amount of compensation by $152,289 not to exceed, for a total contract amount of $430,289.

CONTRACT NUMBER:

The FY25 Munis contract number is 3250332.

BACKGROUND AND SUMMARY:

The original contract, City Clerk's #25-0011, was executed on January 14, 2025, as an emergency agreement. During the contract term, a Request for Proposals (RFP) was issued and remains under evaluation. Amendment #1, executed on August 8, 2025, increased the contract compensation by $150,000 and extended the term by six months, establishing a new expiration date of February 5, 2026. At this time, negotiations between the City of Santa Fe and the Animal Shelter are still ongoing, and a final agreement has not yet been reached.

PRIOR APPROVALS AND SUPPORTING INFORMATION:

FUNDING SOURCE:

Fund Name/Number: Law Enforcement/223

Munis Org Name/Number: Police Administration/2230310

Munis Object Name/Number: Service Contracts/510310

Budget Officer / Designee: Andy Hopkins **Date:** 11/07/2025

Budget Officer Comment/Exceptions: _____

PROCUREMENT METHOD:

The procurement method used was NMSA 1978, Section 13-1-127, Emergency

Emergency #50-M0087-24-EM158

Chief Procurement Officer (CPO)/Designee: _____ **Date:** 11/09/2025

CPO Comment/Exceptions: _____

ASSOCIATED APPROVALS:

IT Components included? ☐ **Yes |** ☒ **No**

Approval: _____ **Title:** _____ **Date:** _____

Comment/Exceptions: _____

Treasury/Point of Sale Components included? ☐ **Yes |** ☒ **No**

Approval: _____ **Title:** _____ **Date:** _____

Comment/Exceptions: _____

Vehicles included? ☐ **Yes |** ☒ **No**

Approval: _____ **Title:** _____ **Date:** _____

Comment/Exceptions: _____

Construction to City Facilities, Furniture, and/or Fixtures included? ☐ **Yes |** ☒ **No**

Approval: _____ **Title:** _____ **Date:** _____

Comment/Exceptions: _____

Is this an externally funded purchase? ☐ **Yes |** ☒ **No**

If yes, what is the issuing agency: _____

Approval: _____ **Title:** _____ **Date:** _____

Comment/Exceptions: _____

Is this a Capital Asset or Project? ☐ **Yes |** ☒ **No**

Project Ledger Number: _____

Approval: _____ **Title:** _____ **Date:** _____

Comment/Exceptions: _____

ATTACHMENTS:

Procurement document: Emergency Determination
Original contract packet (with previous contract amendment #1)
Contract Amendment #2

Item #: 25-0564
Munis Contract #: 3250332
Original Contract Item #: 25-0011
SWPA/GSA/Coop/RFP/ITB #: Emergency #50-M0087-24-EM158

CITY OF SANTA FE, POLICE DEPARTMENT]
AMENDMENT No. 2 TO
Contract # 3250332

Santa Fe Animal Shelter Services Contract

This AMENDMENT No. 2 (the "Amendment") amends the CITY OF SANTA FE CONTRACT, dated January 21, 2025 (the "Contract"), between the City of Santa Fe (the "City") and Santa Fe Animal Shelter and Humane Society, Inc. (the "Contractor"). The date of this Amendment shall be the date when it is executed by the City and the Contractor whichever occurs last.

RECITALS:

A. Under the terms of the Contract, Contractor has agreed to provide the City professional services, in accordance with the terms and conditions hereinafter set out, and the Contractor understanding and consenting to the foregoing is willing to render such professional services as outlined in the Contract.

B. Pursuant to Article 14 of the Contract, and for good and valuable consideration, the receipt and sufficiency of which are acknowledged by the parties, the City and the Contractor agree as follows:

1. COMPENSATION.

Article 3, paragraph A of the Contract is amended to increase the amount of compensation by a total of $152,289 so that Article 3, paragraph A reads in its entirety as follows:

> A. The City shall pay to the Contractor in full payment for services satisfactorily performed based on the per hour/per treatment costs listed in Attachment A. Such compensation shall not exceed four hundred thirty thousand two hundred eighty-nine dollars ($430,289), including gross receipts tax paid at the rate of 8.1875%. **The total amount payable to the Contractor under this Contract, including gross receipts, tax and expenses, shall not exceed ($430,289).**

2. CONTRACT IN FULL FORCE.

Except as specifically provided in this Amendment, the Contract remains and shall remain in full force and effect, in accordance with its terms.

IN WITNESS WHEREOF, the parties have executed this Amendment No. 2 to the Contract as of the dates set forth below.

CITY OF SANTA FE:

Alan Webber (Dec 16, 2025 17:07:32 MST)

ALAN WEBBER, MAYOR

DATE: Dec 16, 2025

CONTRACTOR:

Jackie Roach

JACKIE ROACH, CEO

DATE: Nov 6, 2025

NMBTIN: _____

ATTEST:

ANDREA SALAZAR (Dec 16, 2025 17:09:17 MST)

CITY CLERK

GB MTG 12/10/20252

CITY ATTORNEY'S OFFICE:

Christopher Ryan

Christopher Ryan (Nov 6, 2025 15:14:40 MST)

SENIOR ASSISTANT CITY ATTORNEY

APPROVED FOR FINANCES:

Emily K. Oster

FINANCE DIRECTOR

CITY OF SANTA FE

The Purchasing Memo

Date: July 8, 2025

To: Governing Body and Finance Committee

Via: Paul Joye, Chief of Police

From: Ben Valdez, Deputy Chief of Police

Subject: Extension of Animal Shelter Contract/ Professional Services Agreement

Vendor Name: Santa Fe Animal Shelter and Humane Society

Munis Vendor Number: 1521

ITEM AND ISSUE:

The Police Department respectfully requests your review and approval of Amendment #1 to Contract #3250332 with Santa Fe Animal Shelter for animal boarding and care services. Amendment #1 increases the amount of compensation and extends the term by $150,000 not to exceed for a total compensation of $278,000 for a term of an additional six months.

CONTRACT NUMBER:

The FY25 Munis contract number is 3250332.

BACKGROUND AND SUMMARY:

The original contract, City Clerk's #25-0011, was executed on January 14, 2025. During the term of this emergency agreement, a Request for Proposals (RFP) was issued and is currently still under review. At this time, a new agreement between the City of Santa Fe and the Animal Shelter has not yet been finalized. As the current contract is set to expire on July 14, 2025, we are requesting an extension to ensure the continuity of services without interruption.

PRIOR APPROVALS AND SUPPORTING INFORMATION:

FUNDING SOURCE:

Fund Name/Number: Law Enforcement/223

Munis Org Name/Number: Police Administration/2230310

Munis Object Name/Number: Service Contracts/510310

Budget Officer / Designee: Andy Hopkins **Date:** 07/09/2025

Budget Officer Comment/Exceptions: _____

PROCUREMENT METHOD:

The procurement method used was NMSA 1978, Section 13-1-127, Emergency

Emergency #50-M0087-24-EM158

Chief Procurement Officer (CPO)/Designee: _____ **Date:** 07/14/2025

CPO Comment/Exceptions: Please include the new emergency posting - 6 Months

ASSOCIATED APPROVALS:

IT Components included? ☐ **Yes** | ☒ **No**

Approval: _____ **Title:** _____ **Date:** _____

Comment/Exceptions: _____

Treasury/Point of Sale Components included? ☐ **Yes** | ☒ **No**

Approval: _____ **Title:** _____ **Date:** _____

Comment/Exceptions: _____

Vehicles included? ☐ **Yes** | ☒ **No**

Approval: _____ **Title:** _____ **Date:** _____

Comment/Exceptions: _____

Construction to City Facilities, Furniture, and/or Fixtures included? ☐ **Yes** | ☒ **No**

Approval: _____ **Title:** _____ **Date:** _____

Comment/Exceptions: _____

Is this an externally funded purchase? ☐ **Yes** | ☒ **No**

If yes, what is the issuing agency: _____

Approval: _____ **Title:** _____ **Date:** _____

Comment/Exceptions: _____

Is this a Capital Asset or Project? ☐ **Yes** | ☒ **No**

Project Ledger Number: _____

Approval: _____ **Title:** _____ **Date:** _____

Comment/Exceptions: _____

ATTACHMENTS:

Procurement document: Emergency Determination
Original contract packet (with previous contract amendments)
Contract Amendment

City of Santa Fe
Emergency Determination Form

The emergency procurement method may only be used as described in NMSA 1978, Section 13-1-127 and in the City's Procurement Manual XII.

The Department that makes an emergency procurement to plan or prepare for the response to a serious threat to public health, welfare, safety or property caused by a flood, fire, epidemic, riot, act of terrorism, equipment failure or similar event shall account for the money spent in making the procurement and report on that accounting to the City's Finance Department Director within ninety days after the end of the contract or fiscal year in which the procurement was made, whichever comes first.

I. **City Contact Info:**

Department: **Police, City of Santa Fe**
Department Director: **Paul Joye, Police Chief**
Department Contact: **Tara King**
Department Telephone Number: **(505) 955-5004**
City of SF Chief Procurement Officer: **Travis Dutton-Leyda, CPO**
Telephone Number: **(505) 629-8351**

II. **Contractors' Information:**

1. **Loving Care Cremation**
   - **Services**: Pet cremation services, including individual and communal cremation options.
   - **Contact Information**:
     - **Phone**: (505) 466-6034
     - **Address**: 8A Old Las Vegas Hwy, Santa Fe, NM 87505

2. **Mosaic Animal Emergency & Specialty**
   - **Services**: Emergency veterinary care, specialty services, and advanced diagnostics.
   - **Contact Information**:
     - **Phone**: (505) 216-0606
     - **Address**: 20 Bisbee Ct, Santa Fe, NM 87508

3. **Roadrunner Veterinary Emergency & Specialty Hospital**
   - **Services**: Emergency and specialty veterinary care; surgery and diagnostic services.
     - **Phone:** (505) 345-2322
     - **Address:** 5 Camino Karsten, Algodones, NM 87001

4. **Santa Fe Animal Shelter & Humane Society**
    - **Services**: Animal sheltering, adoption, veterinary services, and public outreach.
    - **Contact Information**:
        - **Address**: 100 Caja del Rio Road, Santa Fe, NM 87507
        - **Phone**: (505) 983-4309

5. **Top Dog Pet Resort**
    - **Services**: Pet daycare, grooming, boarding, and specialty services.
    - **Contact Information**:
        - **Address**: 100 Sun Ave, Santa Fe, NM 87505
        - **Phone**: (505) 982-6080

III. **Term of prospective contract: Up to 3 months**

IV. **Amount of prospective contract: Two hundred thousand dollars ($200,000.00)**

V. **Location of Services: Throughout the City of Santa Fe**

VI. **Please thoroughly list the services (scope of work), construction or items of tangible personal property of the contract:**

Scope of Work for Animal Services Contract

The contracted provider will perform the following services to support the City of Santa Fe in meeting its urgent animal welfare, public health, and compliance needs. The contractor must ensure adherence to all applicable city ordinances, particularly SFCC 1987 Chapter V, Animal Control Ordinances, and provide consistent, humane, and timely care for animals under the city's jurisdiction. **The contractor shall comply with all provisions of law and regulations as set forth in Chapter V of SFCC 1987, pursuant to Section 5-11.1.B of the Animal Control Ordinance.**

1. Shelter Operations and Animal Care

- **Facility Management**: Operate a safe, sanitary, and fully staffed animal shelter as a housing facility to care for and shelter stray, abandoned, or seized animals.
- **Intake and Animal Control**: Accept animals brought by the City's Animal Services Officers, including stray, injured, or surrendered animals. Provide adequate housing, food, and care.
- **Quarantine and Rabies Control**: Confine and manage animals involved in bite incidents or suspected rabies cases. Report and deliver deceased animals as required for rabies testing.
- **Feral Cat Management**: Assess feral cats and, if healthy, provide sterilization before releasing them back to their original location or finding suitable alternative placements.
- **Holding Period Compliance**: Retain animals during the legally mandated holding period, transferring ownership to the shelter upon the hold's expiration unless other arrangements are specified by law.

2. Veterinary Care

- **Routine and Emergency Medical Services**: Provide veterinary evaluations, vaccinations, routine treatments, and emergency medical care as necessary to ensure animal welfare.

- **Veterinary Oversight**: Ensure that all medical care decisions, including euthanasia, are made by a licensed veterinarian. Euthanize animals only when medically necessary and notify the City of such actions.

3. Licensing and Public Health Compliance

- **Licensing**: Oversee pet licensing processes in alignment with city regulations. Collect and retain licensing fees, maintaining records and providing the City with access as needed.
- **Public Health Reporting**: Coordinate with health authorities, including the New Mexico Department of Public Health, on communicable diseases or incidents affecting public safety.

4. Storage and Disposal of Remains

- **Storage of Deceased Animals**: Maintain appropriate facilities (e.g., freezers) for storing the remains of deceased animals received from Animal Services Officers.
- **Cremation Services**: Provide timely and humane disposal of animal remains through cremation, ensuring environmental and public health compliance.

5. Administrative and Reporting Responsibilities

- **Detailed Documentation and Reporting**: Maintain records for each animal, including intake, care, medical treatment, and final disposition. Submit monthly status reports to the City, summarizing shelter activities and public health-related incidents.
- **Collaboration with City Representatives**: Work with city representatives to manage intake processes when city staff are unavailable and handle the release of impounded animals to owners outside regular operating hours.

VII. **Provide an explanation for the justification of the procurement including a description of the emergency condition(s) requiring use of emergency procurement and the practicable competition utilized in compliance with NMSA 1978, Section 13-1-127.**

The emergency procurement for animal services in Santa Fe is justified due to the immediate need for continued animal shelter operations, veterinary care, and compliance with public health regulations. The city's ability to care for stray, injured, and abandoned animals is essential for public safety and animal welfare. Without an established vendor, Santa Fe faces risks, including:

1. Public Health Risks: Managing rabid or diseased animals is critical to prevent the spread of diseases like rabies. The inability to quarantine, vaccinate, or euthanize animals as necessary could pose a health risk to the community.

2. Legal and Regulatory Compliance: The city is mandated to uphold Chapter V of the Santa Fe City Code, which outlines strict requirements for shelter operations, animal handling, and licensing. Failure to comply could lead to legal repercussions and public safety risks.

3. Immediate Animal Welfare Concerns: Without shelter and veterinary care, the city cannot meet basic animal welfare needs. This would likely lead to overcrowding in temporary holding facilities, inability to provide adequate care, and compromised humane treatment for animals.

4. Practicable Competition: In compliance with NMSA 1978, Section 13-1-127, an expedited yet

practicable competitive process was utilized. Potential service providers within a reasonable distance of Santa Fe were considered, ensuring that the selected vendor meets city requirements and can initiate services without delay.

This emergency procurement process enables the city to fulfill essential animal services swiftly and within compliance, ensuring safety, welfare, and public health for the residents of Santa Fe.

VIII. **Please describe what measures are being taken to minimize the duration and effect of this emergency procurement (for example: is the emergency only in place until a competitive process can be completed, etc.).**

Measures to Minimize Duration and Impact of Emergency Procurement

This emergency procurement is structured as a temporary solution to address the city's immediate need for animal services. To ensure it is in place only as long as necessary, the following measures are being taken:

1. Transition Plan to Competitive Procurement: The emergency contract will remain active only until a standard competitive procurement process can be completed. The city is actively in the process of a formal Request for Proposals (RFP) to secure long-term service providers through a competitive, transparent process.

2. Short-Term Contract with Defined Limits: The emergency procurement has clear limits in scope and duration to minimize dependency. The city has restricted services to the most critical functions, such as shelter operations, veterinary care, and public health compliance, essential for public safety and animal welfare.

3. Monitoring and Evaluation: The city will monitor the contractor's performance under the emergency contract, using this data to refine service requirements and improve the competitive bidding process. Monthly status reports from the contractor will ensure oversight and facilitate a smoother transition to long-term providers.

These measures are intended to minimize both the impact and duration of the emergency contract, ensuring that the city's animal services can return to a competitively bid, stable solution as soon as possible.

IX. **Describe what measures the Department will take in the future to prevent/mitigate use of emergency procurement under similar circumstances.**

To prevent or mitigate the need for emergency procurements in similar situations, the Department will take the following proactive steps:

1. Immediate RFP Process: The Department is currently in the process of a Request for Proposals (RFP) to secure long-term, competitively bid contracts for essential animal services. This proactive approach will reduce reliance on short-term emergency measures.

2. Advanced Contract Planning: In the future, the Department will implement advanced planning for contract renewals and potential vendor changes. This will include monitoring contract timelines and setting internal reminders to initiate competitive bidding well before contract expiration dates.

3. Contingency Partnerships: The Department will work to establish contingency agreements with additional animal service providers to ensure a rapid response in the event of vendor loss or service disruption. By having alternative providers identified, the Department can reduce delays and maintain service continuity.

4. Regular Market Assessments: Conducting periodic market assessments will help identify qualified vendors within the region, ensuring that the city has a pool of providers ready to respond to an RFP, if needed. This process will also aid in securing providers who meet the city's specific needs, reducing the likelihood of service disruptions.

By taking these steps, the Department aims to enhance preparedness and reduce reliance on emergency procurement, securing uninterrupted, compliant, and humane animal services for the City of Santa Fe.

Certified by:

City Chief Procurement Officer, Travis Dutton-Leyda	**Date** 07/03/2025

City Approval by:

Paul Joye (Jul 3, 2025 15:54 MDT) **Department Director, Paul Joye, Police Chief**	**Date** 07/03/2025
Marcos Martinez Marcos Martinez (Jul 3, 2025 17:00 MDT) on behalf of **City Attorney, Erin McSherry**	**Date** 07/03/2025
Mark Scott (Jul 7, 2025 15:48 MDT) **City Manager, Mark Scott**	**Date** 07/07/2025
Emily K. Oster **Finance Director, Emily Oster**	**Date** 07/03/2025

Note: All emergencies must be posted to the SPD website:
https://www.generalservices.state.nm.us/statepurchasing/submit-emergency.aspx
and the City of Santa Fe's website:
https://santafenm.gov/finance-2/purchasing-1/solicitations

Item #: 25-0357
Munis Contract #: 3250332
Original Contract Item #: 25-0011
SWPA/GSA/Coop/RFP/ITB #: Emergency #50-M0087-24-EM158

CITY OF SANTA FE, POLICE DEPARTMENT]
AMENDMENT No. 1 TO
Contract # 3250332

Santa Fe Animal Shelter Services Contract

This AMENDMENT No. 1 (the "Amendment") amends the CITY OF SANTA FE CONTRACT, dated January 14, 2025 (the "Contract"), between the City of Santa Fe (the "City") and Santa Fe Animal Shelter and Humane Society, Inc. (the "Contractor"). The date of this Amendment shall be the date when it is executed by the City and the Contractor whichever occurs last.

RECITALS:

A. Under the terms of the Contract, Contractor has agreed to provide the City professional services, in accordance with the terms and conditions hereinafter set out, and the Contractor understanding and consenting to the foregoing is willing to render such professional services as outlined in the Contract.

B. Pursuant to Article 14 of the Contract, and for good and valuable consideration, the receipt and sufficiency of which are acknowledged by the parties, the City and the Contractor agree as follows:

1. COMPENSATION.

Article 3, paragraph A of the Contract is amended to increase the amount of compensation by a total of $150,000 so that Article 3, paragraph A reads in its entirety as follows:

> A. The City shall pay to the Contractor in full payment for services satisfactorily performed based on the per hour/per treatment costs listed in Attachment A. Such compensation shall not exceed two hundred seventy-eight thousand dollars ($278,000), including gross receipts tax ("NMGRT"). NMGRT will be paid at the rate of 8.1875%. **The total amount payable to the Contractor under this Contract, including gross receipts, tax and expenses, shall not exceed ($278,000).**

2. TERM:

Article 4 of the Contract is hereby deleted in its entirety and substitute the following Article 4 in its place:

THIS CONTRACT SHALL NOT BECOME EFFECTIVE UNTIL APPROVED BY THE CITY. This Contract shall terminate 6 months from the date of signature unless terminated pursuant to paragraph 5 (Termination) and paragraph 6 (Appropriations).

3. CONTRACT IN FULL FORCE.

Except as specifically provided in this Amendment, the Contract remains and shall remain in full force and effect, in accordance with its terms.

IN WITNESS WHEREOF, the parties have executed this Amendment No. 1 to the Contract as of the dates set forth below.

CITY OF SANTA FE:

Alan Webber (Aug 5, 2025 12:36:25 MDT)

ALAN WEBBER, MAYOR

DATE: Aug 5, 2025

CONTRACTOR:
Santa Fe Animal Shelter and Humane Society, Inc.

Jackie Roach

JACKIE ROACH, Chief Executive Officer

TITLE

DATE: 07/03/2025

NMBTIN: _____

ATTEST:

ANDREA SALAZAR (Aug 5, 2025 12:58:35 MDT)

CITY CLERK
GB MTG 07/30/2025

CITY ATTORNEY'S OFFICE:

Christoher W. Ryan

Christoher W. Ryan (Jul 3, 2025 10:24 MDT)

SENIOR ASSISTANT CITY ATTORNEY

APPROVED FOR FINANCES:

Emily K. Oster

FINANCE DIRECTOR

CITY OF SANTA FE

Date: January 3, 2025

To: Governing Body
Finance Committee
Quality of Life Committee

Via: Randy Randall, Interim City Manager
Paul Joye, Chief of Police

From: **Ben Valdez, Deputy Chief of Police** B. Valdez, DC (Jan 3, 2025 17:29 MST)

Subject: **Professional Services Agreement**

Vendor Name: **Santa Fe Animal Shelter and Humane Society**

Vendor Number: **1521**

ITEM AND ISSUE:
Request for Approval of the Emergency Professional Services Agreement between the Santa Fe Animal Shelter and Humane Society, Inc. and City of Santa Fe, for a six month agreement not to exceed a total of $128,000.00. (Ben Valdez, Deputy Chief of Police, bpvaldez@santafenm.gov)

Action Requested: Approval of a Professional Services Agreement for $128,000.

BACKGROUND AND SUMMARY:
The City of Santa Fe does not maintain their own animal shelter facility and has historically utilized the Santa Fe Animal Shelter and Humane Society to a facility for the humane housing of domestic animals, including veterinarian care for strays, and disposal services by way of cremation. Once animals complete the mandatory stray hold period, the Santa Fe Animal Shelter and Humane Society takes responsibility of the animals and facilitates adoptions.

The Emergency Professional Services Agreement for animal services in Santa Fe is justified due to the immediate need for continued animal shelter operations, veterinary care, and compliance with public health regulations. The city's ability to care for stray, injured, and abandoned animals is essential for public safety and animal welfare. Without an established vendor, Santa Fe faces numerous risks.

While this Emergency Agreement is in place, staff is concurrently completing the Request for Proposals (RFP) process to achieve a long term, multi-year agreement to for the operation of an animal shelter facility through a contractor. Having this agreement allows shelter operations to continue until the RFP process is complete.

PROCUREMENT METHOD:
NMSA 1978, Section 13-1-127 # 50-M0087-24-EM158 (determination form attached)

Chief Procurement Officer Approval: _____ **Date:** Jan 9, 2025
Comment/Exceptions: _____

Supporting Information:

CONTRACT NUMBER:
FY25 Munis Contract # is 3250332

$$$$$ SOURCE/REVENUE: ☒**Expense** | ☐**Revenue**
The funding source is:
Fund Name/Number: Law Enforcement/223
Munis Org Name/Number: Police Administration/2230310
Munis Object Name/Number: Service Contracts/510310

Budget Officer Approval: Andy Hopkins **Date:** Jan 6, 2025
Comment/Exceptions: _____

Grant ☐**Yes** | ☒ **No**
Grant #: N/A
Grant Manager/Accounting Officer Approval: N/A **Date:** _____
Comment/Exceptions: _____

Project ☐**Yes** | ☒ **No**
Project Ledger #: _____

CAPITAL ASSET (will this procurement result in a tangible item that costs more than $5,000
☐**Yes** | ☒ **No**
Asset # (if known): _____

Repair or Replacement of Existing Equipment:
☐**Yes** | ☒ **No**
Capital Project:
(New and improvement projects that are going to cost $10,000 or more)
☐ **Yes** | ☒ **No**
Department Approvals:
IT Components: ☐ **Yes** | ☒ **No**
Vehicles: ☐ **Yes** | ☒ **No**
Facilities, Furniture, Fixtures, Equipment: ☐ **Yes** | ☒ **No**
Approval: N/A **Title:** _____ **Date:** _____
Approval: _____ **Title:** _____ **Date:** _____
Comment & Exceptions: _____

Department Contract Administrator Contact Info: AnnaMarie Bowen x5122

ATTACHMENTS:
Emergency Determination Form
Professional Services Agreement
COI

Item #: **25-0011**
Munis Contract #: 3250332
Emergency #: 50-M0087-24-EM158

CITY OF SANTA FE

PROFESSIONAL SERVICES CONTRACT

THIS CONTRACT is made and entered into by and between the City of Santa Fe, New Mexico, hereinafter referred to as the "City," and **Santa Fe Animal Shelter and Humane Society, Inc.**, hereinafter referred to as the "Contractor," and is effective as of the date set forth below upon which it is executed by the Parties.

RECITALS

WHEREAS, the Chief Procurement Officer of the City has made the determination that this Contract is in accordance with the provisions of the New Mexico Procurement Code (NMSA 1978, 13-1-28 et seq.) pursuant to NMSA 1978, Sections 13-1-127 and 13-1-128, and;

WHEREAS, the Contractor is one of such requisite and qualifications and is willing to engage with the City for professional services, in accordance with the terms and conditions hereinafter set out, and the Contractor understanding and consenting to the foregoing is willing to render such professional services as outlined in the Contract; and

The City and the Contractor hereby agree as follows:

1. Scope of Work

A. The City Shall:

1) Contact owners of animals collected by the City, as required by Section 5-7.1 SFCC 1987.
2) Mark all City Animal Services vehicles with a "City of Santa Fe" designation so as to identify and differentiate them from Contractor's vehicles. Only utilize personal protective equipment and supplies provided by the City of Santa Fe.
3) Complete in writing, information on the impound cards including the time and exact location at which the animal was impounded. At time of intake, it will be noted if the animal has been cited or will be issued an active citation such as "dangerous dog" or "vicious dog."
4) Regarding animal bite cases, supply upon intake, complete and sign a Bite Case Quarantine form, along with the regular impound card. If the owner of the animal is known and present at the time of impound, the form will be completed and signed by the owner. If the owner is known and is not present at the time of impound, the City will complete the form with the information, but without the signature.
5) The City assumes responsibility for expenses for any animal brought in by the City that requires services outside of the Contractor's regular business hours, scope of capability, or level of overnight care. Cases brought in after 4:30 PM may require transport and overnight care at a veterinary emergency facility, upon discretion of the Animal Services Officer with the City being responsible for expenses incurred. The City accepts the Contractor's business hours may be changed at the Contractor's discretion. Contractor will inform the City in writing at least ten (I 0) days before any such changes are implemented. In the event of delayed opening or early closing due to inclement weather, a manmade or natural disaster the Contractor shall

immediately inform the Animal Services Supervisor of the delayed opening or early closure.

6) During regular operating hours when summoned by the Contractor through the Santa Fe Police Dispatch Center, Animal Services Officers shall report to the Contractor's Facility to complete an impound or release of animals.
7) Deliver to the Contractor the remains of deceased animals for cremation disposal by the Contractor and pay the rate established cremation rate in l.B.15. The Animal Services Officer shall completely and legibly record each deceased animal on the City Carcass Log when placing an animal in the freezer.
8) The City reserves the right to utilize other vendors for veterinary care as needed.
9) The City reserves the right to utilize its own internal services when deemed appropriate.

B. The Contractor shall provide the following services for the City as requested by the city:

1) Comply with all provisions of law and regulations as set forth in Chapter "V" of SFCC 1987, pursuant to Section 5-11.1.B of the Animal Control Ordinance.
2) Operate and maintain an animal shelter as an animal housing facility for the benefit of the citizens of the City. Carry out all duties relating to rabid and biting animals, including, in the case of live animals, confining the animal and determining the immunization status, and in the case of dead animals, preparing and delivering such an animal to the New Mexico Department of Public Health or other approved facility in order that the department may arrange for laboratory determination of whether or not such animal is infected with rabies. All bite cases shall be reported to the City and the animal confined under supervision of the City.
3) Accept an average of ***one hundred ten*** (***110***) stray dogs, cats and other approved domestic small animals per month that are brought to the animal shelter by the City's Animal Services, provided these animals do not exhibit any symptoms of rabies or other dangerous disease. If the number of stray animals exceeds ***one hundred ten*** (***110)*** in a given month, the City will be billed separately at the Contractor's daily impound rate currently forty dollars ($40.00) per day, per animal.
4) All healthy feral cats (as determined by the Contractor) will be sterilized and returned to the location where they were found, delivered to another managed cat colony or considered for adoption.
5) Animals other than dogs and cats may be accepted by the animal shelter at the Contractor's exclusive discretion. Before other animals are accepted by the Contractor, the City must obtain explicit approval from the Contractor in each case. If the Contractor declines to accept these animals, the City will find housing for these animals other than the Contractor.
6) Hold all animals brought to the animal shelter by the City, which remain unclaimed, in accordance with the provisions as set forth in Section 5-7.1 SFCC 1987, unless for humane reasons, the Contractor's veterinarian determines that euthanasia is appropriate prior to that time. ***The date of impound counts as day one for City Impounded animals when calculating hold periods. After the expiration of the legal holding time, all animals become the property of the Contractor.***

7) Holds on animals beyond the legal stray holding time, including but not limited to animals held in the course of investigations, will be billed separately at the Contractor's daily impound rate, currently forty dollars ($40.00) per day, per animal. The Contractor reserves the right to refuse extended stays for animals whose quality of life is compromised or who cannot humanely be cared for in the Contractor's facility as determined by the Contractor.
8) The City may assign the Contractor to be responsible for licensing animals in the City of Santa Fe pursuant to Section 5-5.6 SFCC 1987 until the City makes the determination to assume sole responsibility for licensing animals in the City. Until such determination, the Contractor is responsible for licensing and the Contractor will incur all costs deemed necessary by the Contractor for such licensing and the City will allow Contractor to collect and retain all licensing fees and revenue. In addition, the Contractor shall provide all data related to licensing and fees to the City. Notice to the Contractor to be responsible for licensing or to provide notice to that the City will be solely responsible for licensing will be provided in writing. The City of Santa Fe retains the express right to determine the licensing fee.
9) Provide monthly status reports, as well as individual animal records to the City.
10) Collect and retain all animal boarding fees and costs.
11) Contractor will not be required to board beyond the stray hold period animals for impoundment from an Animal Services Officer, which the Animal Service Officer indicates are to be held as evidence in a pending legal proceeding such as a hoarding case or other criminal case. Contractor may accept such animals beyond the stray holding period on a case-by-case basis based on boarding availability.
12) When a representative of the City is not available during regular operating hours, the Contractor will complete the detailed intake documentation and accept a stray domestic animal found within the Santa Fe City limits by a person who is not the owner of the animal. Upon acceptance of the stray, the Contractor shall immediately contact the Santa Fe Police Dispatch Center and request the Animal Services Officer report to the Contractor's facility to complete the impound card and complete the impound process for the stray. The Contractor's acceptance and shelter of the stray will be confirmed by the Animal Services Officer and the stray will be counted toward the animals the Contractor is compensated for monthly in this contract.
13) If an owner of an impounded animal being held at the Contractor's facility under this contract wishes to retrieve their pet when a representative of the City is unavailable during regular operating hours, the Contractor shall immediately contact the Santa Fe Police Dispatch Center and request the Animal Services Officer report to the facility to complete the release of the animal.
14) Provide medical care under the direction and authority of the Contractor's licensed veterinarian. Decisions regarding all medical care, including the treatment of animals, rest with the Contractor's licensed veterinarian. Animals will not be euthanized within the animal holding period unless medically necessary. Decisions regarding medically necessary euthanasia of suffering animals impounded by the Animal Services Officer and being held at the Contractor's facility rest with the Contractor's licensed veterinarian. The Contractor shall notify the Animal Services Supervisor no later than the next business day of euthanasia or sedation of any animal administered prior to the completion of the hold period.
15) Be responsible for the storage and disposal by cremation of remains received from an Animal Services Officer (ASO) that are deceased upon arrival to the contractor's facility as per Article

1, paragraph A7. The agreed upon rate for disposal of remains by way of cremation is a flat rate of $100 per animal The Contractor shall provide and maintain a freezer on the premises for the appropriate storage of remains of deceased animals during the Stray Hold and remains identification period.

2. Standard of Performance; Licenses

A. The Contractor does hereby accept its designation as a professional service, rendering services related to Animal Services for the City, as set forth in this Contract. The Contractor represents that Contractor possesses the personnel, experience, and knowledge necessary to perform the services described under this Contract.

B. The Contractor agrees to obtain and maintain throughout the term of this Contract, all applicable professional and business licenses required by law, for itself, its employees, agents, representatives, and subcontractors.

3. Compensation

A. The City shall pay to the Contractor in full payment for services satisfactorily performed based on the per hour/per treatment costs listed in Attachment A. such compensation shall not exceed one hundred twenty eight thousand dollars ($128,000), including gross receipts tax. **The total amount payable to the Contractor under this Contract, including gross receipts tax and expenses, shall not exceed ($128,000.00).**

B. Payment. The total compensation under this Contract shall not exceed $128,000.00 including New Mexico gross receipts tax. **PLEASE NOTE NO PROPERTY TAX WILL BE PAID TO THE CONTRACTOR BY THE City. This amount is a maximum and not a guarantee that the work assigned to be performed by Contractor under this Contract shall equal the amount stated herein. The Parties do not intend for the Contractor to continue to provide Services without compensation when the total compensation amount is reached. Contractor is responsible for notifying the City when the Services provided under this Contract reach the total compensation amount. In no event will the Contractor be paid for Services provided in excess of the total compensation amount without this Contract being amended in writing prior to services, in excess of the total compensation amount being provided.**

C. Payment shall be made upon Acceptance of each Deliverable and upon the receipt and Acceptance of a detailed, certified Payment Invoice. Payment will be made to the Contractor's designated mailing address. In accordance with Section 13-1-158 NMSA 1978, payment shall be tendered to the Contractor within thirty (30) days of the date of written certification of Acceptance. All Payment Invoices MUST BE received by the City no later than fifteen (15) days after the termination of this Contract. Payment Invoices received after such date WILL NOT BE PAID.

D. **Notice of Extended Payment Provision For Grant Funded Contracts**. This contract allows the owner to make payment within 45 days after submission of an undisputed request for payment.

4. Term

THIS CONTRACT SHALL NOT BECOME EFFECTIVE UNTIL APPROVED BY THE CITY. This Contract shall terminate 6 months from date of signature unless terminated pursuant to paragraph 5 (Termination) and paragraph 6 (Appropriations).

5. Termination

A. Grounds. The City may terminate this Contract for convenience or cause. For contracts within their authority, the City Manager or their designee is authorized to provide the notice of termination, otherwise such notice of termination shall be provided by the Mayor or their designee as authorized by the Governing Body. The Contractor may only terminate this Contract based upon the City's uncured, material breach of this Contract.

B. Notice; City Opportunity to Cure.

1) The City shall give Contractor written notice of termination at least thirty (30) days prior to the intended date of termination.

2) Contractor shall give City written notice of termination at least thirty (30) days prior to the intended date of termination, which notice shall (i) identify all the City's material breaches of this Contract upon which the termination is based and (ii) state what the City must do to cure such material breaches. Contractor's notice of termination shall only be effective (i) if the City does not cure all material breaches within the thirty (30) day notice period or (ii) in the case of material breaches that cannot be cured within thirty (30) days, the City does not, within the thirty (30) day notice period, notify the Contractor of its intent to cure and begin with due diligence to cure the material breach.

3) Notwithstanding the foregoing, this Contract may be terminated immediately upon written notice to the Contractor (i) if the Contractor becomes unable to perform the services contracted for, as determined by the City; (ii) if, during the term of this Contract, the Contractor is suspended or debarred by the City; or (iii) the Contract is terminated pursuant to Paragraph 6, "Appropriations", of this Contract.

C. Liability. Except as otherwise expressly allowed or provided under this Contract, the City's sole liability upon termination shall be to pay for acceptable work performed prior to the Contractor's receipt or issuance of a notice of termination; provided, however, that a notice of termination shall not nullify or otherwise affect either party's liability for pre-termination defaults under or breaches of this Contract. The Contractor shall submit an invoice for such work within thirty (30) days of receiving or sending the notice of termination. *THIS PROVISION IS NOT EXCLUSIVE AND DOES NOT WAIVE THE CITY'S OTHER LEGAL RIGHTS AND REMEDIES CAUSED BY THE CONTRACTOR'S DEFAULT/BREACH OF THIS CONTRACT.*

6. Appropriations

The terms of this Contract are contingent upon sufficient appropriations and authorization being made by the Governing Body for the performance of this Contract. If sufficient appropriations and authorization are not made by the Governing Body, this Contract shall terminate immediately upon written notice being given by the City to the Contractor. The City's decision as to whether sufficient appropriations are available shall be accepted by the Contractor and shall be final. If the City proposes an amendment to the Contract to unilaterally reduce funding, the Contractor shall have the option to terminate the Contract or to agree to the reduced funding, within thirty (30) days of receipt of the proposed amendment.

7. Status of Contractor

The Contractor and its agents and employees are independent contractors performing professional services for the City and are not employees of the City. The Contractor and its agents and employees shall not accrue leave, retirement, insurance, bonding, use of City vehicles, or any other benefits afforded to employees of the

City as a result of this Contract. The Contractor acknowledges that all sums received hereunder are reportable by the Contractor for tax purposes, including without limitation, self-employment and business income tax. The Contractor agrees not to purport to bind the City unless the Contractor has express written authority to do so, and then only within the strict limits of that authority.

8. Assignment

The Contractor shall not assign or transfer any interest in this Contract or assign any claims for money due or to become due under this Contract without the prior written approval of the City.

9. Subcontracting

The Contractor shall not subcontract any portion of the services to be performed under this Contract without the prior written approval of the City. No such subcontract shall relieve the primary Contractor from its obligations and liabilities under this Contract, nor shall any subcontract obligate direct payment from the City.

10. Release

Final payment of the amounts due under this Contract shall operate as a release of the City, its officers and employees from all liabilities, claims and obligations whatsoever arising from or under this Contract.

11. Confidentiality

Any confidential information provided to or developed by the Contractor in the performance of this Contract shall be kept confidential and shall not be made available to any individual or organization by the Contractor without the prior written approval of the City.

12. Product of Service -- Copyright

All materials developed or acquired by the Contractor under this Contract shall become the property of the City and shall be delivered to the City no later than the termination date of this Contract. Nothing developed or produced, in whole or in part, by the Contractor under this Contract shall be the subject of an application for copyright or other claim of ownership by or on behalf of the Contractor.

13. Conflict of Interest; Governmental Conduct Act

A. The Contractor represents and warrants that it presently has no interest and, during the term of this Contract, shall not acquire any interest, direct or indirect, which would conflict in any manner or degree with the performance or services required under the Contract.

B. The Contractor further represents and warrants that it has complied with, and, during the term of this Contract, will continue to comply with, and that this Contract complies with all applicable provisions of the Governmental Conduct Act, Chapter 10, Article 16 NMSA 1978.

C. Contractor's representations and warranties in Paragraphs A and B of this Article are material representations of fact upon which the City relied when this Contract was entered into by the parties. Contractor shall provide immediate written notice to the City if, at any time during the term of this Contract, Contractor learns that Contractor's representations and warranties in Paragraphs A and B of this Article were erroneous on the effective date of this Contract or have become erroneous by reason of new or changed circumstances. If it is later determined that Contractor's representations and warranties in Paragraphs A and B of this Article were erroneous on the effective date of this Contract or have become erroneous by reason of new or changed circumstances, in addition to other remedies available to the City

and notwithstanding anything in the Contract to the contrary, the City may immediately terminate the Contract.

D. All terms defined in the Governmental Conduct Act have the same meaning in this section.

14. Amendment

A. This Contract shall not be altered, changed, or amended except by instrument in writing executed by the parties hereto and all other required signatories.

B. If the City proposes an amendment to the Contract to unilaterally reduce funding due to budget or other considerations, the Contractor shall, within thirty (30) days of receipt of the proposed Amendment, have the option to terminate the Contract, pursuant to the termination provisions as set forth in Article 4 herein, or to agree to the reduced funding.

15. Entire Agreement.

This Contract, together with any other documents incorporated herein by reference and all related Exhibits and Schedules constitutes the sole and entire contract of the Parties with respect to the subject matter of this Contract, and supersedes all prior and contemporaneous understandings, agreements, representations, and warranties, both written and oral, with respect to the subject matter. In the event of any inconsistency between the statements in the body of this Contract, and the related Exhibits and Schedules, the statements in the body of this Contract shall control.

16. Merger

This Contract incorporates all the Agreements, covenants and understandings between the parties hereto concerning the subject matter hereof, and all such covenants, agreements, and understandings have been merged into this written contract.

This contract is a result of emergency procurement 50-M0087-24-.

No prior Agreement or understanding, oral or otherwise, of the parties or their agents shall be valid or enforceable unless embodied in this Contract.

17. Penalties for violation of law

NMSA 1978, sections 13-1-28 through 13-1-199, imposes civil and criminal penalties for its violation. In addition, the New Mexico criminal statutes impose felony penalties for illegal bribes, gratuities, and kickbacks.

18. Equal Opportunity Compliance

The Contractor agrees to abide by all federal and state laws and rules and regulations, and Santa Fe City Code, pertaining to equal employment opportunity. In accordance with all such laws of the State of New Mexico, the Contractor assures that no person in the United States shall, on the grounds of race, religion, color, national origin, ancestry, sex, age, physical or mental handicap, or serious medical condition, spousal affiliation, sexual orientation or gender identity, be excluded from employment with or participation in, be denied the benefits of, or be otherwise subjected to discrimination under any program or activity performed under this Contract. If Contractor is found not to be in compliance with these requirements during the life of this Contract, Contractor agrees to take appropriate steps to correct these deficiencies.

19. Applicable Law

The laws of the State of New Mexico shall govern this Contract, without giving effect to its choice of law provisions. Venue shall be proper only in a New Mexico court of competent jurisdiction in accordance with

NMSA 1978, section 38-3-2. By execution of this Contract, Contractor acknowledges and agrees to the jurisdiction of the courts of the State of New Mexico over any and all lawsuits arising under or out of any term of this Contract.

20. Workers Compensation

The Contractor agrees to comply with state laws and rules applicable to workers compensation benefits for its employees. If the Contractor fails to comply with the Workers Compensation Act and applicable rules when required to do so, this Contract may be terminated by the City.

21. Professional Liability Insurance

Contractor shall maintain professional liability insurance throughout the term of this Contract providing a minimum coverage in the amount required under the New Mexico Tort Claims Act. The Contractor shall furnish the City with proof of insurance of Contractor's compliance with the provisions of this section as a condition prior to performing services under this Contract.

22. Other Insurance

If the services contemplated under this Contract will be performed on or in City facilities or property, Contractor shall maintain in force during the entire term of this Contract, the following insurance coverage(s), naming the City as additional insured.

A. **Commercial General Liability** insurance shall be written on an occurrence basis and be a broad as ISO Form CG 00 01 with limits not less than $2,000,000 per occurrence and $2,000,000 in the aggregate for claims against bodily injury, personal and advertising injury, and property damage. Said policy shall include broad form Contractual Liability coverage and be endorsed to name the City of Santa Fe their officials, officers, employees, and agents as additional insureds.

B. **Business Automobile Liability** insurance for all owned, non-owned automobiles, with a combined single limit not less than $1,000,000 per accident.

C. **Broader Coverage and Limits**. The insurance requirements under this Contract shall be the greater of (1) the minimum coverage and limits specified in this Contract, or (2) the broader coverage and maximum limits of coverage of any insurance policy or proceeds available to the Named Insured. It is agreed that these insurance requirements shall not in any way act to reduce coverage that is broader or that includes higher limits than the minimums required herein. No representation is made that the minimum insurance requirements of this Contract are sufficient to cover the obligations of Contractor hereunder.

D. Contractor shall maintain the above insurance for the term of this Contract and name the City as an additional insured and provide for 30 days cancellation notice on any Certificate of Insurance form furnished by Contractor. Such certificate shall also specifically state the coverage provided under the policy is primary over any other valid and collectible insurance and provide a waiver of subrogation.

23. Records and Financial Audit

The Contractor shall maintain detailed time and expenditure records that indicate the date; time, nature and cost of services rendered during the Contract's term and effect and retain them for a period of three (3) years from the date of final payment under this Contract. The records shall be subject to inspection by the City. The

City shall have the right to audit billings both before and after payment. Payment under this Contract shall not foreclose the right of the City to recover excessive or illegal payments.

24. Indemnification

The Contractor shall defend, indemnify and hold harmless the City from all actions, proceeding, claims, demands, costs, damages, attorneys' fees and all other liabilities and expenses of any kind from any source which may arise out of the performance of this Contract, caused by the negligent act or failure to act of the Contractor, its officers, employees, servants, subcontractors or agents, or if caused by the actions of any client of the Contractor resulting in injury or damage to persons or property during the time when the Contractor or any officer, agent, employee, servant or subcontractor thereof has or is performing services pursuant to this Contract. If any action, suit or proceeding related to the services performed by the Contractor or any officer, agent, employee, servant or subcontractor under this Contract is brought against the Contractor, the Contractor shall, as soon as practicable but no later than two (2) days after it receives notice thereof, notify the legal counsel of the City.

25. New Mexico Tort Claims Act

Any liability incurred by the City of Santa Fe in connection with this Contract is subject to the immunities and limitations of the New Mexico Tort Claims Act, Section 41-4-1, et. seq. NMSA 1978, as amended. The City and its "public employees" as defined in the New Mexico Tort Claims Act, do not waive sovereign immunity, do not waive any defense and do not waive any limitation of liability pursuant to law. No provision in this Contract modifies or waives any provision of the New Mexico Tort Claims Act.

26. Invalid Term or Condition

If any term or condition of this Contract shall be held invalid or unenforceable, the remainder of this Contract shall not be affected and shall be valid and enforceable.

27. Enforcement of Contract

A party's failure to require strict performance of any provision of this Contract shall not waive or diminish that party's right thereafter to demand strict compliance with that or any other provision. No waiver by a party of any of its rights under this Contract shall be effective unless express and in writing, and no effective waiver by a party of any of its rights shall be effective to waive any other rights.

28. Notices

Any notice required to be given to either party by this Contract shall be in writing and shall be delivered in person, by courier service or by U.S. mail, either first class or certified, return receipt requested, postage prepaid, as follows:

To the City: Paul Joye, Chief of Police, 2515 Camino Entrada, pmjoye@santafenm.gov

To the Contractor: Santa Fe Animal Shelter & Human Society, 100 Caja Del Rio
finances@SFhumanesociety.org

29. Authority

If Contractor is other than a natural person, the individual(s) signing this Contract on behalf of Contractor represents and warrants that he or she has the power and authority to bind Contractor, and that no further action, resolution, or approval from Contractor is necessary to enter a binding contract.

30. Non-Collusion

In signing this Contract, the Contractor certifies the Contractor has not, either directly or indirectly, entered into action in restraint of free competitive bidding in connection with this offer submitted to the City's Chief Procurement Officer.

31. Default/Breach

In case of Default and/or Breach by the Contractor, for any reason whatsoever, the City may procure the goods or services from another source and hold the Contractor responsible for any resulting excess costs and/or damages, including but not limited to, direct damages, indirect damages, consequential damages, special damages, and the City may also seek all other remedies under the terms of this Contract and under law or equity.

32. Equitable Remedies

The Contractor acknowledges that its failure to comply with any provision of paragraph 1.B of this Contract may cause the City irrevocable harm and that a remedy at law for such a failure might be an inadequate remedy for the City, and the Contractor consents to the City 's requesting from a court of competent jurisdiction, specific performance, or injunction, or any other equitable relief in order to enforce such compliance. The City's rights to seek equitable relief pursuant to this Contract shall be in addition to, and not in lieu of, any other remedy that the City may have under applicable law, including, but not limited to, monetary damages.

33. Default and Force Majeure

The City reserves the right to cancel all, or any part of any orders placed under this Contract without cost to the City, if the Contractor fails to meet the provisions of this Contract and, except as otherwise provided herein, to hold the Contractor liable for any excess cost occasioned by the City due to the Contractor's default. The Contractor shall not be liable for any excess costs if failure to perform the order arises out of causes beyond the control and without the fault or negligence of the Contractor; such causes include, but are not restricted to, acts of God or the public enemy, acts of the State or Federal Government, fires, floods, epidemics, quarantine restrictions, strikes, freight embargoes, unusually severe weather and defaults of subcontractors due to any of the above, unless the City shall determine that the supplies or services to be furnished by the subcontractor were obtainable from other sources in sufficient time to permit the Contractor to meet the required delivery scheduled. The rights and remedies of the City provided in this Clause shall not be exclusive and are in addition to any other rights now being provided by law or under this Contract.

IN WITNESS WHEREOF, the Parties have executed this Contract as of the date of the signature by the required approval authorities below.

CITY OF SANTA FE:

Randy Randall (Jan 14, 2025 08:10 MST)

Randy Randall, Interim City Manager

DATE: Jan 14, 2025

CONTRACTOR:
Santa Fe Animal Shelter and Humane Society, Inc.

Jacqueline Roach (Jan 3, 2025 14:56 MST)

Jackie Roach, Chief Executive Officer

DATE: Jan 3, 2025

NMBTIN#: _____

ATTEST:

ANDREA SALAZAR (Jan 14, 2025 14:39 MST)

Andréa Salazar, City Clerk

CITY ATTORNEY'S OFFICE:

Christopher W. ryan (Jan 3, 2025 15:15 MST)

Senior Assistant City Attorney

APPROVED FOR FINANCES:

Emily K. Oster

Emily Oster, Finance Director

Attachment A

Canine Spay: $250
Canine Neuter: $200
Feline Spay/Neuter: $150

Vaccines: 1 year and boosters are $15 per application (Felines get FVRCP and Rabies, Dogs get DAPP, Bordetella, Rabies depending on age and known medical the number of applications varies by the individual, for our average intake it is 4x applications for dogs 3x for cats)

Microchip Implantation $15

Flea/Tick Preventative and Deworming varies by animal weight but for our average intake $10 each, 3 total applications in an animal's stay with us (2x deworm 1x flea/tick).

Daily Boarding to City is$45.90/day
If Medical Care is necessary, the City's Daily Cost of Care is $78.38/day

Cremation:

- Small mammals (pocket pets), fish, reptiles, birds - $15
- Companion Animals - $100

Emergency Medical Fees are variable by procedure/treatment, there are 32 line items ranging from $5 to $185 with an open cost for lab work that has to be sent to Albuquerque.

City of Santa Fe
Emergency Determination Form

The emergency procurement method may only be used as described in NMSA 1978, Section 13-1-127 and in the City's Procurement Manual XII.

The Department that makes an emergency procurement to plan or prepare for the response to a serious threat to public health, welfare, safety or property caused by a flood, fire, epidemic, riot, act of terrorism, equipment failure or similar event shall account for the money spent in making the procurement and report on that accounting to the City's Finance Department Director within ninety days after the end of the contract or fiscal year in which the procurement was made, whichever comes first.

I. City Contact Info:

Department: **Police, City of Santa Fe**
Department Director: **Paul Joye, Police Chief**
Department Contact: **Tara King**
Department Telephone Number: **(505) 955-5004**
City of SF Chief Procurement Officer: **Travis Dutton-Leyda, CPO**
Telephone Number: **(505) 629-8351**

II. Contractors' Information:

1. **Loving Care Cremation**
   - **Services**: Pet cremation services, including individual, and communal cremation options.
   - **Contact Information**:
     - **Phone**: (505) 466-6034
     - **Address**: 8A Old Las Vegas Hwy, Santa Fe, NM 87505

2. **Mosaic Animal Emergency & Specialty**
   - **Services**: Emergency veterinary care, specialty services, and advanced diagnostics.
   - **Contact Information**:
     - **Phone**: (505) 216-0606
     - **Address**: 20 Bisbee Ct, Santa Fe, NM 87508

3. **Roadrunner Veterinary Emergency & Specialty Hospital**
   - **Services**: Emergency and specialty veterinary care; surgery and diagnostic services.
     - **Address:** 5 Camino Karsten, Algodones, NM 87001

- **Phone:** (505) 345-2322

4. **Santa Fe Animal Shelter & Humane Society**
   - **Services**: Animal sheltering, adoption, veterinary services, and public outreach.
   - **Contact Information**:
     - **Address**: 100 Caja del Rio Road, Santa Fe, NM 87507
     - **Phone**: (505) 983-4309

5. **Top Dog Pet Resort**
   - **Services**: Pet daycare, grooming, boarding, and specialty services.
   - **Contact Information**:
     - **Address**: 100 Sun Ave, Santa Fe, NM 87505
     - **Phone**: (505) 982-6080

III. **Term of prospective contract: Up to 6 months**

IV. **Amount of prospective contract: Two hundred thousand dollars ($200,000.00)**

V. **Location of Services: Throughout the City of Santa Fe**

VI. **Please thoroughly list the services (scope of work), construction or items of tangible personal property of the contract:**

Scope of Work for Animal Services Contract

The contracted provider will perform the following services to support the City of Santa Fe in meeting its urgent animal welfare, public health, and compliance needs. The contractor must ensure adherence to all applicable city ordinances, particularly SFCC 1987 Chapter V, Animal Control Ordinances, and provide consistent, humane, and timely care for animals under the city's jurisdiction. **The contractor shall comply with all provisions of law and regulations as set forth in Chapter V of SFCC 1987, pursuant to Section 5-11.1.B of the Animal Control Ordinance.**

1. Shelter Operations and Animal Care

- **Facility Management**: Operate a safe, sanitary, and fully staffed animal shelter as a housing facility to care for and shelter stray, abandoned, or seized animals.
- **Intake and Animal Control**: Accept animals brought by the City's Animal Services Officers, including stray, injured, or surrendered animals. Provide adequate housing, food, and care.
- **Quarantine and Rabies Control**: Confine and manage animals involved in bite incidents or suspected rabies cases. Report and deliver deceased animals as required for rabies testing.
- **Feral Cat Management**: Assess feral cats and, if healthy, provide sterilization before releasing them back to their original location or finding suitable alternative placements.
- **Holding Period Compliance**: Retain animals during the legally mandated holding period, transferring ownership to the shelter upon the hold's expiration unless other arrangements are specified by law.

2. Veterinary Care

- **Routine and Emergency Medical Services**: Provide veterinary evaluations, vaccinations, routine treatments, and emergency medical care as necessary to ensure animal welfare.
- **Veterinary Oversight**: Ensure that all medical care decisions, including euthanasia, are made by a licensed veterinarian. Euthanize animals only when medically necessary and notify the City of such actions.

3. Licensing and Public Health Compliance

- **Licensing**: Oversee pet licensing processes in alignment with city regulations. Collect and retain licensing fees, maintaining records and providing the City with access as needed.
- **Public Health Reporting**: Coordinate with health authorities, including the New Mexico Department of Public Health, on communicable diseases or incidents affecting public safety.

4. Storage and Disposal of Remains

- **Storage of Deceased Animals**: Maintain appropriate facilities (e.g., freezers) for storing the remains of deceased animals received from Animal Services Officers.
- **Cremation Services**: Provide timely and humane disposal of animal remains through cremation, ensuring environmental and public health compliance.

5. Administrative and Reporting Responsibilities

- **Detailed Documentation and Reporting**: Maintain records for each animal, including intake, care, medical treatment, and final disposition. Submit monthly status reports to the City, summarizing shelter activities and public health-related incidents.
- **Collaboration with City Representatives**: Work with city representatives to manage intake processes when city staff are unavailable and handle the release of impounded animals to owners outside regular operating hours.

VII. **Provide an explanation for the justification of the procurement including a description of the emergency condition(s) requiring use of emergency procurement and the practicable competition utilized in compliance with NMSA 1978, Section 13-1-127.**

The emergency procurement for animal services in Santa Fe is justified due to the immediate need for continued animal shelter operations, veterinary care, and compliance with public health regulations. The city's ability to care for stray, injured, and abandoned animals is essential for public safety and animal welfare. Without an established vendor, Santa Fe faces risks, including:

1. Public Health Risks: Managing rabid or diseased animals is critical to prevent the spread of diseases like rabies. The inability to quarantine, vaccinate, or euthanize animals as necessary could pose a health risk to the community.
2. Legal and Regulatory Compliance: The city is mandated to uphold Chapter V of the Santa Fe City Code, which outlines strict requirements for shelter operations, animal handling, and licensing. Failure to comply could lead to legal repercussions and public safety risks.

3. Immediate Animal Welfare Concerns: Without shelter and veterinary care, the city cannot meet basic animal welfare needs. This would likely lead to overcrowding in temporary holding facilities, inability to provide adequate care, and compromised humane treatment for animals.

4. Practicable Competition: In compliance with NMSA 1978, Section 13-1-127, an expedited yet practicable competitive process was utilized. Potential service providers within a reasonable distance of Santa Fe were considered, ensuring that the selected vendor meets city requirements and can initiate services without delay.

This emergency procurement process enables the city to fulfill essential animal services swiftly and within compliance, ensuring safety, welfare, and public health for the residents of Santa Fe.

VIII. **Please describe what measures are being taken to minimize the duration and effect of this emergency procurement (for example: is the emergency only in place until a competitive process can be completed, etc.).**

Measures to Minimize Duration and Impact of Emergency Procurement

This emergency procurement is structured as a temporary solution to address the city's immediate need for animal services. To ensure it is in place only as long as necessary, the following measures are being taken:

1. Transition Plan to Competitive Procurement: The emergency contract will remain active only until a standard competitive procurement process can be completed. The city is actively preparing the necessary documents to initiate a formal Request for Proposals (RFP) to secure long-term service providers through a competitive, transparent process.

2. Short-Term Contract with Defined Limits: The emergency procurement has clear limits in scope and duration to minimize dependency. The city has restricted services to the most critical functions, such as shelter operations, veterinary care, and public health compliance, essential for public safety and animal welfare.

3. Monitoring and Evaluation: The city will monitor the contractor's performance under the emergency contract, using this data to refine service requirements and improve the competitive bidding process. Monthly status reports from the contractor will ensure oversight and facilitate a smoother transition to long-term providers.

These measures are intended to minimize both the impact and duration of the emergency contract, ensuring that the city's animal services can return to a competitively bid, stable solution as soon as possible.

IX. **Describe what measures the Department will take in the future to prevent/mitigate use of emergency procurement under similar circumstances.**

To prevent or mitigate the need for emergency procurements in similar situations, the Department will take the following proactive steps:

1. Immediate RFP Process: The Department will issue a Request for Proposals (RFP) as soon as possible to secure long-term, competitively bid contracts for essential animal services. This proactive approach will reduce reliance on short-term emergency measures.

2. Advanced Contract Planning: In the future, the Department will implement advanced planning for contract renewals and potential vendor changes. This will include monitoring contract timelines and setting internal reminders to initiate competitive bidding well before contract expiration dates.

3. Contingency Partnerships: The Department will work to establish contingency agreements with additional animal service providers to ensure a rapid response in the event of vendor loss or service disruption. By having alternative providers identified, the Department can reduce delays and maintain service continuity.

4. Regular Market Assessments: Conducting periodic market assessments will help identify qualified vendors within the region, ensuring that the city has a pool of providers ready to respond to an RFP, if needed. This process will also aid in securing providers who meet the city's specific needs, reducing the likelihood of service disruptions.

By taking these steps, the Department aims to enhance preparedness and reduce reliance on emergency procurement, securing uninterrupted, compliant, and humane animal services for the City of Santa Fe.

Certified by:

City Chief Procurement Officer, Travis Dutton-Leyda	Nov 14, 2024 **Date**

City Approval by:

Paul Joye (Nov 14, 2024 16:31 MST) **Department Director, Paul Joye, Police Chief**	Nov 14, 2024 **Date**
City Attorney, Erin McSherry	Nov 14, 2024 **Date**
Randy Randall (Nov 14, 2024 16:45 MST) **Interim City Manager, Randy Randall**	Nov 14, 2024 **Date**
Finance Director, Emily Oster	Nov 14, 2024 **Date**

Note: All emergencies must be posted to the SPD website:
https://www.generalservices.state.nm.us/statepurchasing/submit-emergency.aspx
and the City of Santa Fe's website:
https://santafenm.gov/finance-2/purchasing-1/solicitations

CERTIFICATE OF LIABILITY INSURANCE

DATE (MM/DD/YYYY): 7/7/2025

THIS CERTIFICATE IS ISSUED AS A MATTER OF INFORMATION ONLY AND CONFERS NO RIGHTS UPON THE CERTIFICATE HOLDER. THIS CERTIFICATE DOES NOT AFFIRMATIVELY OR NEGATIVELY AMEND, EXTEND OR ALTER THE COVERAGE AFFORDED BY THE POLICIES BELOW. THIS CERTIFICATE OF INSURANCE DOES NOT CONSTITUTE A CONTRACT BETWEEN THE ISSUING INSURER(S), AUTHORIZED REPRESENTATIVE OR PRODUCER, AND THE CERTIFICATE HOLDER.

IMPORTANT: If the certificate holder is an ADDITIONAL INSURED, the policy(ies) must have ADDITIONAL INSURED provisions or be endorsed. If SUBROGATION IS WAIVED, subject to the terms and conditions of the policy, certain policies may require an endorsement. A statement on this certificate does not confer rights to the certificate holder in lieu of such endorsement(s).

PRODUCER Inszone Insurance Services, LLC 2721 Citrus Road, Suite A Rancho Cordova CA 95742 License#: 0F82764	**CONTACT NAME:** Lauren Hemphill **PHONE (A/C, No, Ext):** 877-308-9663 **FAX (A/C, No):** 916-503-6271 **E-MAIL ADDRESS:** info@inszoneins.com
INSURED SANTA FE ANIMAL SHELTER 100 Caja Del Rio Rd. Santa Fe NM 87507 SANTFEA-03	**INSURER(S) AFFORDING COVERAGE** / **NAIC #** **INSURER A :** Cincinnati Insurance Company 10677 **INSURER B :** New Mexico Southwest Casualty Company 10207 **INSURER C :** **INSURER D :** **INSURER E :** **INSURER F :**

COVERAGES **CERTIFICATE NUMBER:** 1127849719 **REVISION NUMBER:**

THIS IS TO CERTIFY THAT THE POLICIES OF INSURANCE LISTED BELOW HAVE BEEN ISSUED TO THE INSURED NAMED ABOVE FOR THE POLICY PERIOD INDICATED. NOTWITHSTANDING ANY REQUIREMENT, TERM OR CONDITION OF ANY CONTRACT OR OTHER DOCUMENT WITH RESPECT TO WHICH THIS CERTIFICATE MAY BE ISSUED OR MAY PERTAIN, THE INSURANCE AFFORDED BY THE POLICIES DESCRIBED HEREIN IS SUBJECT TO ALL THE TERMS, EXCLUSIONS AND CONDITIONS OF SUCH POLICIES. LIMITS SHOWN MAY HAVE BEEN REDUCED BY PAID CLAIMS.

INSR LTR	TYPE OF INSURANCE	ADDL INSD	SUBR WVD	POLICY NUMBER	POLICY EFF (MM/DD/YYYY)	POLICY EXP (MM/DD/YYYY)	LIMITS	
A	X **COMMERCIAL GENERAL LIABILITY** CLAIMS-MADE X OCCUR GEN'L AGGREGATE LIMIT APPLIES PER: POLICY PRO-JECT LOC OTHER:			EPP 047 30 60	1/31/2025	1/31/2026	EACH OCCURRENCE DAMAGE TO RENTED PREMISES (Ea occurrence) MED EXP (Any one person) PERSONAL & ADV INJURY GENERAL AGGREGATE PRODUCTS - COMP/OP AGG 	$ 1,000,000 $ 500,000 $ 5,000 $ 1,000,000 $ 2,000,000 $ 2,000,000 $
A	**AUTOMOBILE LIABILITY** ANY AUTO OWNED AUTOS ONLY X SCHEDULED AUTOS X HIRED AUTOS ONLY X NON-OWNED AUTOS ONLY			EBA 047 30 60	1/31/2025	1/31/2026	COMBINED SINGLE LIMIT (Ea accident) BODILY INJURY (Per person) BODILY INJURY (Per accident) PROPERTY DAMAGE (Per accident) 	$ 1,000,000 $ $ $ $
A	X **UMBRELLA LIAB** X OCCUR **EXCESS LIAB** CLAIMS-MADE DED RETENTION $			EPP 047 30 60	1/31/2025	1/31/2026	EACH OCCURRENCE AGGREGATE 	$ 4,000,000 $ $
B	**WORKERS COMPENSATION AND EMPLOYERS' LIABILITY** Y / N ANYPROPRIETOR/PARTNER/EXECUTIVE OFFICER/MEMBER EXCLUDED? **(Mandatory in NH)** If yes, describe under DESCRIPTION OF OPERATIONS below	N / A		26.136	1/31/2025	1/31/2026	X PER STATUTE OTH-ER E.L. EACH ACCIDENT E.L. DISEASE - EA EMPLOYEE E.L. DISEASE - POLICY LIMIT	 $ 1,000,000 $ 1,000,000 $ 1,000,000

DESCRIPTION OF OPERATIONS / LOCATIONS / VEHICLES (ACORD 101, Additional Remarks Schedule, may be attached if more space is required)

CERTIFICATE HOLDER

City of Santa Fe
200 Lincoln Ave
Santa Fe NM 87501

CANCELLATION

SHOULD ANY OF THE ABOVE DESCRIBED POLICIES BE CANCELLED BEFORE THE EXPIRATION DATE THEREOF, NOTICE WILL BE DELIVERED IN ACCORDANCE WITH THE POLICY PROVISIONS.

AUTHORIZED REPRESENTATIVE



© 1988-2015 ACORD CORPORATION. All rights reserved.

Item no._____

City of Santa Fe Memorandum

To: Governing Body

From: Carol Swenson, Public Works Business Operations Manager CS

Via: Lia Salaverry, Youth and Family Services Division Director LS
LS

Henri Hammond-Paul, Community Health and Safety Department Director HHP
HENRI HAMMOND-PAUL

Date: December 3, 2025

Re: DFA Grant for Permanent and Transitional Housing to End Homelessness

ACTION:

Request for Approval of Capital Outlay Grant Agreement with New Mexico Department of Finance and Administration for Project 25-J3157 in the Total Amount of $710,000 for Permanent and Transitional Housing to end Homelessness with a Reversion Date of June 30, 2029. (Henri Hammond-Paul, Community Health and Safety Department Director, hmhammondpaul@santafenm.gov)

Request for Approval of a Budget Amendment Resolution (BAR) to Allocate $702,900 from the 2025 Capital Appropriation to FY26 Revenue and WIP Construction for Permanent and Transitional Housing.

BACKGROUND AND SUMMARY:

The City of Santa Fe has been awarded capital appropriation 25-J3157 in the amount of $710,000 "...to acquire land and facilities and to plan, design, construct, purchase and equip permanent and transitional housing in Santa Fe in Santa Fe County."

Of the total appropriation, $7,100 is designated for Art in Public Places (AIPP). The remaining $702,900 is available for project budget allocation. All funds are expected to be expended prior to the June 30, 2029, reversion date.

ATTACHMENTS:

Grant Manager: ERIKA LUJAN
ERIKA LUJAN (Jan 12, 2026 08:32:49 MST)

Grant Agreement NMDFA 25-J3157
PLID Form
BAR

NEW MEXICO CAPITAL OUTLAY GRANT AGREEMENT
CAPITAL APPROPRIATION PROJECT

THIS AGREEMENT is made and entered into by and between the State of New Mexico, Department of Finance & Administration, 407 Galisteo Street, Santa Fe, NM 87501, ("**Department**") and the City of Santa Fe, ("**Grantee**") (individually "**Party**" and collectively "**Parties**"). This Agreement shall be effective as of the date the Department executes it ("**Effective Date**").

WITNESSETH

WHEREAS, in the Laws of 2025, Chapter 159, Section 502, Paragarph 33, the Legislature made an appropriation to the Department, funds from which the Department is making available to the Grantee pursuant to this Agreement; and

WHEREAS, the Department is granting to Grantee, and the Grantee is accepting the grant of funds from this appropriation, in accordance with the terms and conditions of this Agreement;

NOW, THEREFORE, in consideration of the mutual covenants and obligations contained herein, the parties hereby mutually agree as follows:

AGREEMENT

I. PROJECT DESCRIPTION, GRANT AMOUNT, AND REVERSION

A. **25-J3157** ("**Project**") 6/30/2029 ("**Reversion Date**"). Laws of 2025, Chapter 159, Section 50233, Seven Hundred Ten Thousand Dollars and No Cents, $710,000.00, to acquire land and facilities and to plan, design, construct, purchase and equip permanent and transitional housing in Santa Fe in Santa Fe county;.

B. Grantee's total reimbursements shall not exceed $710,000.00 Seven Hundred Ten Thousand Dollars and No Cents, ("**Appropriation Amount**") minus the allocation for Art in Public Places ("**AIPP amount**"), if applicable, $7,100.00 Seven Thousand One Hundred Dollars and No Cents, which equals $702,900.00 Seven Hundred Two Thousand Nine Hundred Dollars and No Cents ("**Adjusted Appropriation Amount**").

C. In the event of a conflict among the Appropriation Amount, the Reversion Date, as defined herein and/or the purpose of the Project, as set forth in this Agreement, and the corresponding appropriation language in the laws cited above in this Article I, the language of the laws cited herein shall control.

The information contained in Article I is referred to collectively as the "**Project Description**."

II. DISBURSEMENT LIMITATION

A. Upon the Effective Date, the Grantee shall submit to the Department a comprehensive procurement plan and expenditure plan, detailing a Project timeline with milestones, required procurements, and identifying expected expenditures per milestone (collectively, "**Project Budget**"). The Department shall review and approve the Project Budget by approving a Notice of

Department's Obligation ("**Notice of Obligation**"), in accordance with the Project Description, a sample of which is attached hereto as **Exhibit B** and incorporated herein by reference. After receipt of approved Notice of Obligation, the Grantee may be reimbursed for allowable costs up to the Adjusted Appropriation Amount. This Agreement and any reimbursements up to the Adjusted Appropriation Amount are expressly conditioned upon the following:

a. Irrespective of any Notice of Obligation, Grantee's expenditures shall be made in accordance with the Project Budget, on or before the Reversion Date and/or, if applicable, any Early Termination Date; and
b. The total amount received by Grantee shall not exceed the lesser of:
    i. the Adjusted Appropriation Amount identified in Article I (B) herein; or
    ii. the total of all amounts stated in the Notice(s) of Obligation evidencing the Department has received and accepted Grantee's Third Party Obligation(s); and
c. Grantee's expenditures are made and accounted for pursuant to the State Procurement Code, State's Model Accounting Practices, and execution of binding written obligations or purchase orders with third-party contractors or vendors for the provision of services, including professional services, or the purchase of tangible personal property and real property for the Project ("**Third Party Obligations**"); and
d. Grantee's submittal of timely Requests for Payment and supporting documentation in accordance with the procedures set forth in this Agreement; and
e. In the event capital assets acquired with Project funds are to be sold, leased, or licensed to or operated by a private entity, the sale, lease, license, or operating agreement:
    i. must be approved by the applicable oversight entity (if any) in accordance with §§ 13-6-2, 13-6-2.1, and 13-6-3; or
    ii. If no oversight entity is required to approve the transaction, the Department of Finance and Administration's Infrastructure Planning Development Division (IPDD) must approve it as complying with the law.

B. Prior to the sale, lease, license, or operating agreement being approved pursuant to Articles II(A)(e)(i) or (ii) herein, the Department may, in its sole and absolute discretion, unless inconsistent with State Board of Finance imposed conditions, reimburse Grantee for necessary expenditures incurred to develop the Project sufficiently to make the sale, lease, license, or operating agreement commercially feasible, limited to planning and design expenditures; and

C. Grantee's submission of documentation of all Third Party Obligations and amendments thereto (including terminations) to the Department and the Department's issuance of a Notice of Obligation for a particular amount in accordance with the terms of this Agreement shall be governed by the following:

a. Grantee is authorized to budget the particular amount set forth in the Notice of Obligation, execute the Third Party Obligation, and request the Third Party to begin work after issuance of a Notice of Obligation by the Department.
b. Grantee acknowledges and agrees that any Third Party Obligations agreed to prior to receiving a Notice of Obligation are its sole responsibility.
c. Grantee shall submit to the Department one copy of all Third Party Obligations and amendments thereto (including terminations) as soon as possible after execution by the Third Party but prior to execution by the Grantee.

d. Department may, in its sole and absolute discretion, issue a Notice of Obligation for the particular amount of a Third Party Obligation that only obligates the Department to reimburse Grantee's expenditures made on or before the Reversion Date or an Early Termination Date. The current Notice of Obligation form is incorporated herein and attached hereto as **Exhibit B**.

D. Grantee shall provide all necessary qualified personnel, materials, and facilities to implement the Project. The Grantee shall finance its share (if any) of the costs of the Project, including all Project overruns.

E. Prior to entering into this Agreement, the Department conducted a risk assessment on the Grantee and a project readiness review for the Project. In accordance with State Model Accounting Practices, FIN 9.2, if the Department determines that the expenditure of Project funds by the Grantee requires special conditions, those conditions are identified and listed in **Exhibit C**, which is attached and incorporated by reference. The Parties agree that, to the extent the Department, in its sole and absolute discretion, determines additional special conditions are necessary or that existing special conditions are no longer required, it may update **Exhibit C** from time to time without the need for a formal amendment of this Agreement.

F. Project funds shall not be used for purposes other than those authorized by the Department in accordance with the Project Description.

G. Project funds cannot be used to reimburse the Grantee for indirect Project costs unless specifically allowed by law.

III. NOTICES

The following provisions shall apply whenever written notices, including written decisions, are to be given or received related to this Agreement.

A. The Grantee designates the person(s) listed below, or their successor, as their official representative(s) concerning all matters related to this Agreement:

Grantee: City of Santa Fe
Name: Alan Webber
Title: Mayor
Address: PO Box 909, Santa Fe, NM 87504
Email: mayor@santafenm.gov
Telephone: 505-955-6590

B. The Grantee designates the person(s) listed below, or their successor, as their Fiscal Officer or Fiscal Agent concerning all matters related to this Agreement:

Grantee: City of Santa Fe
Name: Emily Oster
Title: Finance Director
Address: PO Box 909, Santa Fe, NM 87504
Email: ekoster@santafenm.gov

Telephone: 505-629-3411

C. The Department designates the persons listed below, or their successors, as the Points of Contact for matters related to this Agreement.

Department: DFA/Local Government Division
Name: Daniel Catanach
Title: Grant Manager
Address: Bataan Memorial Bldg. Rm 202, Santa Fe NM 87501
Email: danieln.catanach@dfa.nm.gov
Telephone: 505-231-6090

The Parties agree that all notices, including written decisions, related to this Agreement shall be sent to the persons named above by email or regular mail. For mailings, notices shall be deemed to have been given and received upon the date of the receiving party's actual receipt or five (5) calendar days after mailing, whichever shall first occur. In the case of email transmissions, the notice shall be deemed to have been given and received on the date reflected on the delivery receipt of the email.

IV. TERM & DEADLINE TO EXPEND FUNDS

A. The term of this Agreement shall begin on the Effective Date and terminate on the 30th day of June during the calendar year of the Reversion Date unless Terminated Before Reversion Date ("**Early Termination**") pursuant to Article V herein (collectively "**Term**").

B. The Project's funds must be expended on or before the Reversion Date and, if applicable, the Early Termination Date of this Agreement.

a. For purposes of this Agreement, it is not sufficient for the Grantee to encumber the Project funds on its books on or before the Reversion Date or Early Termination Date.
b. For purposes of this Agreement, an expenditure of funds has occurred on the date the particular quantity of goods is delivered to and received by the Grantee, title to the goods is transferred to the Grantee, and/or as of the date particular services are rendered to and accepted by the Grantee.
c. For purposes of this Agreement, an encumbrance of funds pursuant to a contract or purchase order with a third party does not qualify as an expenditure.

V. EARLY TERMINATION

A. General Provision. The Department may terminate this Agreement before the Reversion Date based on the Completion of the Project, Complete Expenditure of the Adjusted Appropriation, and/or Violation of this Agreement. Early Termination hereunder includes:

a. Termination due to completion of the Project before the Reversion Date;
b. Termination due to complete expenditure of the Adjusted Appropriation Amount before the Reversion Date;
c. Termination for violation of the terms of this Agreement; or
d. Termination for suspected mishandling of public funds, including but not limited to fraud, waste, abuse, and conflicts of interest.

B. Non-appropriation. This Agreement is expressly contingent upon the New Mexico State Legislature making sufficient appropriations and authorizations for the Project Description.

   a. If the Legislature does not appropriate the Appropriation Amount, this Agreement shall terminate upon the Department giving the Grantee written notice of such termination. Such termination shall be effective as of the effective date of the law making the non-appropriation.
      i. The Department's decision as to whether sufficient appropriations or authorizations are available shall be final. Grantee hereby waives any rights to assert an impairment of contract claim against the State of New Mexico in the event of Early Termination of this Agreement.
   b. As used herein, "non-appropriate" or "non-appropriation" includes the following actions by the New Mexico Legislature:
      i. Deauthorization, reauthorization, or revocation of a prior authorization.

C. Grant Disbursements in the Event of Early Termination. In the event of Early Termination, the Department's sole and absolute obligation to reimburse the Grantee is expressly conditioned upon the limitations set forth in Article II above.

D. Notice. Either Party may terminate this Agreement prior to the Reversion Date by providing the other Party with a minimum of fifteen (15) days advance written notice of the Early Termination. Grantee hereby waives any rights to assert an impairment of contract claim against the State of New Mexico in the event of Early Termination of this Agreement by the Department.

VI. SUSPENSION OF NEW OR FURTHER OBLIGATIONS

A. Department, in its sole and absolute discretion, may provide written notice to Grantee to suspend entering into further obligations. Upon the receipt of such written notice by the Grantee:

   a. Grantee shall immediately suspend entering into new or further written obligations with third parties;
   b. Department will suspend the issuance of any new or further Notice of Obligation under this Agreement; and
   c. Department may direct the Grantee to implement a corrective action plan in accordance with Article VI (D) herein.

B. In the event of Suspension of this Agreement, the Department's sole and absolute obligation to reimburse the Grantee is expressly conditioned upon the limitations set forth in Article II herein.

C. A suspension of new or further obligations under this Agreement shall remain in effect unless or until the date the Grantee receives written notice given by the Department informing the Grantee that the Suspension has been lifted or that the Agreement has been Early Terminated in accordance with Article V herein. If the Suspension is lifted, the Department will consider further requests for a Notice of Obligation.

D. Corrective Action Plan in the Event of Suspension. Where the Department, in its sole and absolute discretion, directs Grantee to suspend entering into new or further written obligations

with third parties pursuant to Article VI(A), the Department may, but is not obligated to, require the Grantee to develop and implement a written corrective action plan to remedy the grounds for the Suspension.

a. Such a corrective action plan must be approved by the Department and be signed by the Grantee.
b. Failure to sign a corrective action plan or meet the terms and deadlines set forth in the signed corrective action plan is hereby deemed a violation of the terms of this Agreement for purposes of Early Termination, Article V(A)(c).
c. A corrective action plan shall be in addition to, and not in lieu of, any other equitable or legal remedy authorized hereunder or at law, including but not limited to Early Termination.

VII. AMENDMENTS

Unless expressly stated otherwise herein, this Agreement shall not be altered, changed, or amended except by an instrument in writing duly executed by both parties hereto with the same formalities as this agreement.

VIII. REPORTING

A. Database Reporting

a. Grantee shall provide the Department with quarterly reports of Project activity, entering the required Project information directly into a database required by the Department.
b. Additionally, Grantee shall certify on each Request for Payment form, attached hereto as **Exhibit A** and incorporated herein, that all information provided in the database is true and accurate, updates to the database have been maintained, and all Project activity complies with applicable law and the terms of this Agreement.
c. Grantee hereby acknowledges that failure to perform and/or certify updates to the database will jeopardize the reimbursement of funds. The Department shall give Grantee a minimum of fourteen (14) days' advance written notice of any changes to the information the Grantee is required to report.
d. At the Department's discretion, all reports required hereunder may be directed to and facilitated through an electronic database.
e. Quarterly reports shall be due on the last day of the month, that is, 30 days prior to the end of the quarter following the execution of this Agreement by the Department and ending during the quarter of the submission of the final request for reimbursement for the Project, or the following quarter.

B. Requests for Additional Information/Project Inspection

During the term of this Agreement and during the period of time during which the Grantee must maintain records pursuant to Article VIII, the Department may:

i. request such additional information regarding the Project as it deems necessary; and
ii. conduct, at reasonable times and upon reasonable notice, onsite inspections of the Project.

Grantee shall respond to such requests for additional information within a reasonable period of time, as established by the Department.

B. Requests for Additional Information/Project Inspection

a. During the term of this Agreement and the Record Retention Period, the Department may:
   i. Request additional information regarding the Project as it deems necessary and
   ii. Conduct on-site inspections of the Project at reasonable times and upon reasonable notice.
b. Grantee shall respond to such requests for additional information within the time established by the Department.

IX. REQUEST FOR PAYMENT PROCEDURES

A. Grantee shall request payment by submitting the form attached hereto as **Exhibit A**. Payment requests are subject to the following procedures:

a. Each Request for Payment must be in accordance with the Project Budget and contain proof of payment by the Grantee or liabilities incurred by the Grantee.
   i. Proof of payment must demonstrate the validity of an expenditure or liabilities incurred by Grantee.
   ii. However, Grantee may be reimbursed for unpaid liabilities only if the Department, in its sole and absolute discretion, agrees to do so and in accordance with any special conditions imposed by the Department.
   iii. The Grantee shall make payment to those contractors or vendors within five (5) business days from the date of receiving reimbursement from the Department or in a shorter period than the Department may prescribe in writing.
   iv. The Department reserves the right to make such payments directly to the contractors or vendors as a special condition under this Agreement.
   v. The Grantee is required to certify to the Department proof of payment to the third-party contractor or vendor within five (5) business days from the date the Department reimburses the Grantee.

B. Until the Project is fully planned, designed, and all necessary procurements identified in the Project Budget are completed, Grantee's reimbursements will be limited to the planning, design, and procurement costs outlined in the Project Budget. Once the planning, designing, and procuring stages are complete, the Grantee must obligate at least ten percent (10%) of the Adjusted Appropriation Amount within one (1) year and must have utilized at least eighty-five percent (85%) of the Adjusted Appropriation Amount six (6) months before the reversion date.

C. Deadlines. Grantee shall submit requests for Payments to the Department on the earlier of:

a. Immediately as Grantee receives them, but at a maximum of thirty (30) days from when Grantee incurred the expenditure or liability; or
b. Twenty (20) days from the date of Early Termination or Reversion Date for expenditures or liabilities incurred before the Early Termination date or Reversion Date.

D. Grantee's failure to abide by the requirements set forth in Article II and Article IX herein may result in the denial of its Request for Payment. Department reserves the right to reject a payment request for the Project unless and until it is satisfied that the expenditures or liabilities are for permissible purposes within the meaning of the Project Description, identified within the Project Budget, and that the Grantee is otherwise in compliance with this Agreement.

a. Department's authority to reject any Request for Payment is in addition to, and not in lieu of, any other legal or equitable remedy available to the Department under this Agreement, at law, or in equity.

X. PROJECT CONDITIONS AND RESTRICTIONS

A. The following general conditions and restrictions shall apply to the Project:

a. The Project's funds must be spent in accordance with all applicable state laws, regulations, policies, and guidelines, including, but not limited to, the State Procurement Code.
b. The Project's expenditures and liabilities must be accounted for in accordance with the State's Model Accounting Practices, as amended from time to time.
c. The Project must be implemented in accordance with the New Mexico Public Works Minimum Wage Act, Section 13-4-10 through 13-4-17 NMSA 1978, as applicable.
d. The Project must provide a public benefit above and beyond any incidental benefit to private entities in accordance with applicable law, including, but not limited to, Article IX, Section 14 of the Constitution of the State of New Mexico.
e. Without prior written approval from the Department and State Board of Finance, for the useful life of any asset purchased under this Agreement, Grantee shall not convert any property acquired, built, renovated, repaired, designed, or developed with Project funds to uses other than those specified in the Project Description.
    i. In addition to other remedies available at law or in equity, any disposal or conversion of property acquired, built, renovated, repaired, designed, or developed with Project funds without the Department's and the Board of Finance's express written approval will trigger the Department's right to reimbursement from Grantee of the Appropriated Amount, transfer proceeds from any disposition of property to the State, or otherwise provide consideration to the State for the Appropriated Amounts.
f. Grantee shall comply with all applicable federal and state laws, rules, and regulations pertaining to civil rights and equal employment opportunity.
    i. In accordance with all such laws, rules, and regulations, the Grantee agrees to assure that no person shall, on the grounds of race, color, national origin, sex, sexual preference, age, or handicap, be excluded from participation in the Project, use of the Project, employment with Grantee, or otherwise be denied benefits/subject to discrimination for any activity performed under this Agreement.
g. Where the Department, in its sole and absolute discretion, determines Grantee has failed to comply with the above conditions and restriction, Grantee agrees to take appropriate steps to correct any deficiencies immediately. The Grantee's failure to implement such appropriate steps within a reasonable time, but no longer than thirty (30) days after

notice from the Department, constitutes a breach of this Agreement and grounds for Early Termination.

XI. REPRESENTATIONS AND WARRANTIES

A. Reliance by Department.
   a. Grantee expressly acknowledges that the Department relies on the representations and warranties made by Grantee in this Agreement. Grantee acknowledges that such representations and warranties are a material inducement for the Department to enter into this Agreement and provide the Appropriated Amount.
   b. Grantee shall ensure all representations and warranties provided herein are true, accurate, and complete as of the date of the Effective Date and shall remain so throughout the Term of this Agreement. Grantee is responsible for promptly notifying the Department in writing of any changes or inaccuracies in the representations and warranties contained herein.

B. Grantee hereby represents and warrants the following:

   a. Grantee has taken all necessary steps to attain the legal authority to receive and expend the Project's funds.
   b. Grantee has duly authorized this Agreement, and the person executing it has authority to do so. Once executed by Grantee, this Agreement shall constitute a binding obligation of Grantee, enforceable according to its terms.
   c. Grantee's obligations hereunder do not conflict with any law, ordinance, or resolution applicable to Grantee, Grantee's charter (if applicable), or any judgment or decree to which Grantee is subject.
   d. Grantee has independently confirmed that the Project Description, including, but not limited to, the Appropriated Amount and Reversion Date, is consistent with the underlying appropriation in law.
   e. Grantee's governing body has duly adopted or passed as an official act a resolution, motion, or similar action authorizing the person identified as the official representative of the Grantee to sign and submit Requests for Payment on behalf of Grantee.
   f. Grantee will abide by New Mexico laws regarding conflicts of interest, governmental conduct, and whistleblower protection.
      i. Grantee agrees explicitly none of its officers or employees or its designees or agents, no member of the governing body, and no other public official of Grantee who exercises any function or responsibility with respect to this Agreement, shall have any interest, direct or indirect, in any contract or subcontract, or the proceeds thereof, for the Project.
      ii. Further, Grantee will require all of its contractors to incorporate the language set forth in this paragraph prohibiting conflicts of interest in all subcontracts.
   g. No funds have been paid or will be paid, by or on behalf of the Grantee, to any person for influencing or attempting to influence an officer or employee of the State, any agency, or body in connection with the awarding of any Third Party Obligation.
      i. Grantee will require certifying language prohibiting lobbying to be included in the award documents for all subawards, including subcontracts, loans, and cooperative agreements.

C. Consequences of False or Misleading Representations. If any representation or warranty made by Grantee is found to be false or misleading, the Department shall have the right to exercise any or all of the following remedies:

a. **Termination of Agreement:** Department may terminate this Agreement immediately upon written notice to the Grantee.
b. **Repayment of Grant Funds:** Grantee shall repay all Appropriated Amounts disbursed under this Agreement, upon demand by the Department.
c. **Other Remedies:** Department may pursue any other remedies available at law or in equity.

D. Survival of Representations and Warranties. The representations and warranties made by the Grantee shall survive the Early Termination or expiration of this Agreement.

XII. PROJECT RECORDS

A. Grantee shall be strictly accountable for receipts and disbursements relating to the Project's funds. The Grantee shall follow generally accepted accounting principles and the State's Model Accounting Practices and, if feasible, maintain a separate bank account or fund with a separate organizational code to ensure separate budgeting and accounting of the funds.

B. For six (6) years following the Project's completion ("**Record Retention Period**"), Grantee shall maintain all Project-related records, including, but not limited to, all financial records, requests for proposals, invitations to bid, selection and award criteria, contracts and subcontracts, advertisements, minutes of pertinent meetings, as well as records sufficient to fully account for the amount and disposition of the Appropriated Amount from all sources budgeted for the Project, the purpose for which such funds were used, and such other records as the Department may prescribe.

C. Grantee shall make all Project records available to the Department, the Department's Independent Public Accountant, and the New Mexico State Auditor upon request. With respect to the funds that are the subject of this Agreement, if the State Auditor or the Department finds any funds were improperly expended, Grantee shall be required to reimburse the State all amounts found to be improperly expended.

XIII. IMPROPERLY REIMBURSED FUNDS

If the Department determines part or all of the Appropriation Amount was improperly reimbursed to Grantee, including but not limited to funds reimbursed to Grantee based upon fraud, mismanagement, misrepresentation, misuse, violation of law by the Grantee, after ten (10) days' notice to Grantee and the opportunity to return such funds to the Department, the Department may offset any funds due to Grantee from the State, until the Appropriation Amount is fully repaid.

XIV. LIABILITY

Neither Party shall be responsible for liability incurred as a result of the other Party's acts or omissions in connection with this Agreement. Any liability incurred in connection with this Agreement is subject to

immunities and limitations of the New Mexico Tort Claims Act.

XV. SCOPE OF AGREEMENT

This Agreement constitutes the entire and exclusive agreement between the Parties concerning the subject matter hereof. The Agreement supersedes all prior or contemporaneous agreements, understandings, discussions, communications, and representations, written or verbal.

XVI. REQUIRED NON-APPROPRIATIONS CLAUSE

A. Grantee acknowledges and agrees to include a "non-appropriations" clause in all contracts between it and other parties that are (i) funded in whole or part by funds made available under this Agreement and (ii) entered into after the effective date of this Agreement that states:

   a. "The terms of this Agreement are contingent upon sufficient appropriations and authorization being made by the Legislature of the State of New Mexico ("**Legislature**") for the performance of this Agreement.
   b. If the Legislature does not make sufficient appropriations and authorization, City of Santa Fe may immediately terminate this Agreement by giving Contractor written notice of such termination.
   c. The City of Santa Fe's decision as to whether sufficient appropriations are available shall be final and accepted by the Contractor. Contractor hereby waives any rights to assert an impairment of contract claim against the City of Santa Fe or the State of New Mexico in the event of immediate or Early Termination of this Agreement by the City of Santa Fe or the State Department of Finance and Administration."

XVII. REQUIRED TERMINATION CLAUSE

A. Grantee acknowledges and agrees to include the following termination clause in all contracts that are (i) funded in whole or part by funds made available under this Agreement and (ii) entered into after the effective date of this Agreement:

   a. "This contract is funded in whole or in part by funds made available by the State of New Mexico ("**State**"). Should the State terminate its Agreement with the City of Santa Fe, the City of Santa Fe may terminate this contract immediately by providing Contractor written notice of such termination.
   b. In the event of termination pursuant to this paragraph, the City of Santa Fe's only liability to Contractor shall be for goods and services delivered and accepted prior to the termination date."

XVIII. COMPLIANCE WITH UNIFORM FUNDING CRITERIA

A. Throughout the term of this Agreement, Grantee shall:

   a. Submit all reports of annual audits and agreed-upon procedures required by § 12-6-3(A)-(B), NMSA 1978 by the due dates established in § 2.2.2 NMAC, reports of which must be a

public record pursuant to § 12-6-5(A), NMSA 1978 within forty-five (45) days of delivery to the State Auditor;

b. Have a duly adopted budget for the current fiscal year approved by its budgetary oversight agency (if any);
c. Timely submit all required financial reports to its budgetary oversight agency (if any); and
d. Use accounting methods and procedures consistent with Generally Accepted Accounting Principles and the State's Model Accounting Principals to expend the Appropriated Amount in accordance with applicable law and account for and safeguard Project funds and assets acquired with Project funds.

B. In the event Grantee fails to comply with the requirements of subparagraph A of this Article XVIII, Department may take one or more of the following actions:

a. Suspend new or further obligations pursuant to Article VI(A) of this Agreement;
b. Require the Grantee to develop and implement a written corrective action plan pursuant to Article VI(D) of this Agreement to remedy the non-compliance;
c. Impose special conditions to address the non-compliance by giving Grantee notice of such special conditions in accordance with Article III of this Agreement;
    i. The Parties agree that any special conditions imposed to address non-compliance shall be incorporated into this Agreement, through **Exhibit C**, upon notice to Grantee, without need for formal amendment of this Agreement;
    ii. Special conditions shall be binding and effective on the date that notice is deemed to have been given pursuant to Article III or
d. Terminate this Agreement pursuant to Article V(A) of this Agreement.

XIX. SEVERANCE TAX AND GENERAL OBLIGATION BONDS

A. Grantee acknowledges and agrees that the underlying appropriation for the Project may originate from the issuance of tax-exempt severance tax bonds or general obligation bonds by the State. Proceeds from such bonds are administered by the New Mexico State Board of Finance ("**SBOF**"), an entity separate and distinct from the Department.

a. Grantee acknowledges and agrees:
    i. It is Grantee's responsibility to determine through SBOF what (if any) conditions are currently imposed on the Project;
    ii. Department's failure to inform Grantee of an SBOF-imposed condition does not affect the validity or enforceability of the condition;
    iii. The SBOF may in the future impose further or different conditions upon the Project;
    iv. All SBOF conditions are attached to the Project and Appropriation Amount without the need for formal amendment of this Agreement;
    v. All applicable SBOF conditions must be satisfied before the SBOF will release to the Department funds subject to the condition(s) and
    vi. The Department's obligation to reimburse Grantee from the Project is expressly contingent upon the satisfaction of the then-current SBOF conditions.

B. Grantee acknowledges and agrees SBOF may, at its sole and absolute discretion, require reimbursement or remove eligibility for bond proceeds for the Project if the Project doesn't

proceed sufficiently.

a. Grantee must comply with the requirement to encumber five percent (5%) of Project funds within six months of bond issuance as certified by Grantee in the Bond Questionnaire and Certification documents submitted to the SBOF.
b. Failure to comply may result in the reassignment of the bond proceeds. Upon reassignment of bond proceeds, this Agreement will be suspended until the entity has demonstrated readiness as determined by the SBOF and the Department.

C. Grantee acknowledges and agrees that this Agreement is subject to the SBOF's Bond Project Disbursements rule, § 2.61.6, NMAC, as may be amended from time to time or re-codified.

XX. GENERAL PROVISIONS

A. Assignment: Grantee's rights and obligations under this Agreement are personal and may not be transferred or assigned without the prior written consent of the State. Any attempt at assignment or transfer without such consent shall be void. Any assignment or transfer of Grantee's rights and obligations approved by the State shall be subject to the provisions of this Agreement.

B. Subcontractors: Grantee shall not enter any subgrant or subcontract in connection with its obligations under this Agreement without the prior written approval of the State. Upon request, Grantee shall submit to the Department a copy of each such subgrant or subcontract.

C. Binding Effect: Except as otherwise provided, all provisions of this Agreement, including the benefits and burdens, shall extend to and be binding upon the Parties' respective successors and assigns.

D. Authority: Each Party represents and warrants to the other that the execution and delivery of this Agreement and the performance of such Party's obligations have been duly authorized.

E. Captions and References: The captions and headings in this Agreement are for the convenience of reference only and shall not be used to interpret, define, or limit its provisions. All references in this Agreement to sections (whether spelled out or using the § symbol), subsections, exhibits, or other attachments are references to sections, subsections, exhibits, or other attachments contained herein or incorporated as a part hereof, unless otherwise noted.

F. Counterparts: This Agreement may be executed in multiple, identical, original counterparts, each of which shall be deemed to be an original, but all of which, taken together, shall constitute the same agreement.

G. Digital Signatures: If any signatory signs this agreement using a digital signature in accordance with the State Policies regarding the use of digital signatures, then any agreement or consent to use digital signatures within the electronic system through which that signatory signed shall be incorporated into this Agreement by reference.

H. Modification: Except as otherwise provided in this Agreement, any modification to this Agreement shall only be effective if agreed to in a formal amendment, properly executed and approved in accordance with applicable New Mexico law and State fiscal policies and rules.

Modifications permitted under this Agreement, other than Agreement amendments, shall conform to the policies issued by the State.

I. Statutes, Regulations, Fiscal Rules, and Other Authority: Any reference in this Agreement to a statute, regulation, policy, or other authority shall be interpreted to refer to such authority then current, as may have been changed or amended after the Effective Date of this Agreement.

J. External Terms and Conditions: Notwithstanding anything to the contrary herein, the State shall not be subject to any provision included in any terms, conditions, or agreements appearing on Grantee's or a subcontractor's website or any provision incorporated into any click-through or online agreements related to the Work unless that provision is specifically referenced in this Agreement.

K. Severability: The invalidity or unenforceability of any provision of this Agreement shall not affect the validity or enforceability of any other provision of this Agreement, which shall remain in full force and effect, provided that the Parties can continue to perform their obligations under this Agreement in accordance with its intent.

L. Survival of Certain Agreement Terms: Any provision of this Agreement that imposes an obligation on a Party after the termination or expiration of this Agreement shall survive the termination or expiration of this Agreement and shall be enforceable by the other Party.

M. Third Party Beneficiaries: Except for the Parties' respective successors and assigns described in this Agreement, it does not and is not intended to confer any rights or remedies upon any person or entity other than the Parties. Enforcement of this Agreement and all rights and obligations hereunder are reserved solely to the Parties. Any services or benefits that third parties receive as a result of this Agreement are incidental to this Agreement and do not create any rights for such third parties.

N. Waiver: A Party's failure or delay in exercising any right, power, or privilege under this Agreement, whether explicit or by lack of enforcement, shall not operate as a waiver, nor shall any single or partial exercise of any right, power, or privilege preclude any other or further exercise of such right, power, or privilege.

O. Standard and Manner of Performance: Grantee shall perform its obligations under this Agreement in accordance with the highest standards of care, skill, and diligence in Grantee's industry, trade, or profession.

P. Licenses, Permits, and Other Authorizations: Grantee shall secure, prior to the Effective Date, and maintain at all times during the term of this Agreement, at its sole expense, all licenses, certifications, permits, and other authorizations required to perform its obligations under this Agreement and shall ensure that all employees, agents, and subcontractors secure and maintain at all times during the term of their employment, agency or subcontractor, all license, certifications, permits and other authorizations required to perform their obligations in relation to this Agreement.

Q. Publicity: Any Publicity regarding the subject matter of this Agreement may not be released without prior written approval from the Department. For purposes of this agreement, "**Publicity**"

means notices, informational pamphlets, press releases, email responses, research, reports, signs, and similar public notices prepared by or for the Grantee or jointly with others.

a. Grantee shall obtain written approval prior to issuing any press release or making any public announcement regarding this agreement. Grantee agrees to obtain approval of the Department in advance with respect to all Public Relations, all communications with media, or all communications with any other member of the public with respect to this agreement, except to acknowledge that an agreement does exist.
b. For purposes of this agreement, "Public Relations" includes community relations and means those activities dedicated to maintaining the Department's image or maintaining or promoting understanding and favorable relations with the community or public at large or any segment of the public.
c. Violations of either Article XX (Q)(a) or (b) shall constitute a material Breach of Agreement.

R. Data Sharing: The State intends to secure and collate specific data generated by Grantee under this Agreement to use in support of the State's organizational, policy-making, and management of public resource functions. State, in accordance with **Exhibit E**, attached hereto and incorporated herein by reference, reserves the right to require Grantee and/or its subcontractors to provide specific data relevant to the above-listed functions. Data provided by Grantee may be incorporated into existing or future developed State integrated analysis tools or databases, including but not limited to geographic information system (GIS) networks and databases accessible by the public. Dissemination of data collected may include historical data and projections based on such historical data.

a. To the extent any data transferred as part of this Agreement is legally determined to be the property of Subrecipient or its subcontractors, Subrecipient and/or its subcontractors grants State a nonexclusive, fully paid-up right and license to reproduce, use, distribute, do derivative works based on, and archive data transferred as part of this Agreement.

S. Venue and Choice of Law: This Agreement shall be governed by and construed in accordance with the laws of the State of New Mexico, without regard to any conflict of law provisions. Any legal suit, action, or proceeding arising out of or related to this Agreement shall be instituted exclusively in the district courts located in Santa Fe, New Mexico. The Parties hereby irrevocably submit to the exclusive jurisdiction and venue of such courts in any such suit, action, or proceeding. The Parties waive any objection to the laying of the venue of any such suit, action, or proceeding in the district courts of Santa Fe, New Mexico, and irrevocably waive and agree not to plead or claim in any such court that any such suit, action, or proceeding brought in any such court has been brought in an inconvenient forum.

[SIGNATURE PAGE AND EXHIBITS FOLLOW]
[THIS SPACE LEFT BLANK INTENTIONALLY]

IN WITNESS WHEREOF, the parties have duly executed this Agreement as of the Department's date of execution.

APPROVED BY DEPARTMENT:

Cabinet Secretary, Wayne Propst:

_____ _____

Signature Date

Chief Financial Officer, Mackie Romero:

_____ _____

Signature Date

Local Government Division Director, Cecilia Mavrommatis:

_____ _____

Signature Date

AS TO LEGAL FORM AND SUFFICIENCY

General Counsel's Office:

_____

Signature

_____ _____

(Print Name) (Title)

APPROVED BY GRANTEE:

Entity Name

Official with Authority to Bind Grantee:

Signature

(Print Name) (Title)

Date

ATTEST:

ANDRÉA SALAZAR, CITY CLERK

Date

Fiscal Officer or Chief Financial Officer:

BRIAN MOYA

EMILY OSTER, FINANCE DIRECTOR

Jan 12, 2026

Date

As To Legal Form And Sufficiency

Kevin L. Nault

Kevin L. Nault (Aug 19, 2025 16:49:32 MDT)

KEVIN NAULT, ASSISTANT CITY ATTORNEY

Aug 19, 2025

Date

EXHIBIT A

Request for Payment Form and Certification

STATE OF NEW MEXICO
GRANT APPROPRIATION
Request for Payment Form
Exhibit A

I. Grantee Information (Must match your DFA Substitute W-9 Form)

A. Grantee: _____

B. Address: _____
(Complete Mailing, including Suite, if applicable)

_____
City, State, Zip

C. Contact Name/Phone #: _____

D. Grant No: _____

E. Project Title: _____

F. Grant Expiration Date: _____

II. Payment Computation

A.	Payment Request No.	
B.	Grant Amount:	$ 0.00
C.	AIPP Amount *(If Applicable)*:	$ 0.00
D.	Funds Requested to Date:	$ 0.00
E.	Amount Requested this Payment:	
F.	Reversion Amount *(if applicable)*:	$ 0.00
G.	Grant Balance:	$ 0.00

H. ☐ Final Request for Payment *(if applicable)*

III. Fiscal Year : 2026 (July 1, 2025-June 30, 2026)

(The State of NM Fiscal Year is July 1, 20XX through June 30, 20XX of the following year)

IV. Certifications

☐ I hereby certify that all conditions and requirements for Payments outlined in the Agreement have been met, including but not limited to:
a. Submission and approval of a Project Budget as per Article IV, Section A of the Agreement.
b. Compliance with the Project Budget and expenditure of funds in accordance with the State Procurement Code and the State's Model Accounting Practices.
c. Submission of supporting documentation as required by the Agreement.
d. Maintenance of all necessary records and documentation as stipulated in the Agreement.

☐ I attest that the information provided is correct; expenditures are properly documented and valid or actual receipts, and that the activity fully complies with Article IX, Sec. 14 of the New Mexico Constitution, known as the "anti-donation" clause.

☐ I hereby certify that all representations and warranties made in the Agreement remain true, accurate, and complete as of the date of this request, and will continue to be so throughout the term of the Agreement. I acknowledge that these representations and warranties are a material inducement for the Department to approve this pay request.

Grantee Fiscal Officer or **Fiscal Agent** *(if applicable)*	**Grantee Representative**
Printed Name	Printed Name
Date:	Date:

(State Agency Use Only)

Vendor Code: _____ Fund No.: _____ PO # _____ Loc No.: _____

I certify that the State Agency financial and vendor file information agree with the above submitted information.

ASD Officer Date	Division Grant Manager Date

Revised 7/2025

[THIS SPACE LEFT BLANK INTENTIONALLY]

EXHIBIT B

Notice of Department's Obligation Form

NOTICE OF OBLIGATION TO REIMBURSE GRANTEE
EXHIBIT B

Notice of Obligation to Reimburse Grantee # _____

DATE: _____

TO: Department Representative: _____, Grant Manager

FROM: Grantee Entity: _____

Grantee Official Representative: _____

SUBJECT: Notice of Obligation to Reimburse Grantee

Grant Number: _____

Grant Termination Date: _____

As the designated representative of the Department for Grant Agreement number _____ entered into between Grantee and the Department, I certify that the Grantee has submitted to the Department the following third party obligation executed, in writing, by the third party's authorized representative:

Vendor or Contractor: _____

Third Party Obligation Amount: _____

Vendor or Contractor: _____

Third Party Obligation Amount: _____

I certify that the State is issuing this Notice of Obligation to Reimburse Grantee for permissible purposes within the scope of the project description, subject to all the terms and conditions of the above referenced Grant Agreement.

Grant Amount (Minus AIPP if applicable): _____

The Amount of this Notice of Obligation: _____

The Total Amount of all Previously Issued Notices of Obligation: _____

The Total Amount of all Notices of Obligation to Date: $ 0.00

Note: Contract amounts may exceed the total grant amount, but the invoices paid by the grant will not exceed the grant amount.

Department Rep. Approver: _____

Title: Grant Manager

Signature: _____

Date: _____

1 Administrative and/or Indirect Cost – generally, the legislation authorizing the issuance of bonds prohibits the use of its proceeds for indirect expenses (e.g. penalty fees or damages other than pay for work performed, attorney fees, and administrative fees). Such use of bond proceeds shall not be allowed unless specifically authorized by statute.

Revised 7/2025

[THIS SPACE LEFT BLANK INTENTIONALLY]

OPTIONAL EXHIBIT C
SPECIAL CONDITIONS

The capital outlay oversight requires grantees' accounting methods and procedures, including their internal control framework, to be scrutinized, so as to safeguard State capital outlay appropriations and assets acquired with such appropriations.

This Capital Outlay Special Grant Condition(s) **Exhibit C** is necessary pursuant to § 6-3b-1 et seq., NMSA 1978 (Public Finance Accountability Act) and MAPS Fin 9.2, due to the Grantees' material weaknesses, significant deficiencies, or findings that raised concerns as to the ability to expend grant funds in accordance with applicable law in the organization's FY[20XX] audit. The Special Conditions identified below apply to the authorized agent, [insert the Grantee or Fiscal Agent name].

Procurement - All purchases or contracts the Grantee enters that shall use funding from the Department capital appropriations grant must be approved by the Department prior to the initiation of implementing purchasing documents. The Grantee shall receive such prior approval via official correspondence from the Department, which may be through letter or email. The Grantee shall submit the following to the Department in pursuit of prior approval: purchasing policies and procedures, CFO certification, documentation of management and program approval, policies and procedures governing purchasing and contracting, a copy of the current procurement and contracting policies, and documentation regarding informing staff responsible for purchasing and contracting on such policies and procedures.

Budget - Provide documentation of approval of your current budget from DFA Local Government or other authoritative agency. Provide policies and procedures on who is responsible for and how annual budgets (expenditures and revenue) are established, monitored and adjusted. Provide a corrective action plan on how budget issues identified in your audit will be/have been addressed. Also include documentation on how staff responsible for budgeting is informed on budget policies and procedures.

Capital Assets - Provide a complete list of inventory including inventory control numbers and current location. Provide policies and procedures on capital assets and inventory and specify how the proposed purchased items will be included, tagged, and tracked in capital asset inventory. Also include documentation on how staff responsible for capital assets is informed on capital asset policies and procedures.

Travel and Per Diem - Provide policies and procedures on travel and per diem. Also include how staff who travel and those responsible for travel reimbursement are informed on travel and per diem policies and procedures.

Timely Audits – Provide policies and procedures on annual audits. Provide documentation on how and who is responsible for insuring that annual audits are completed timely. Also include documentation on how staff responsible for the annual audit is informed on audit policies and procedures.

Cash Management – policies and procedures on cash management of federal funds. Provide procedures used to draw and disburse federal funds. Provide procedures to reconcile draw amounts, deposits and disbursements; and to prepare federal cash reporting documents to ensure compliance with federal regulations.

The <Grantee> was required to, and has provided sufficient documentation regarding [insert specific names of the Special Condition(s)], as referenced in the <Grantee>'s [20XX] Audit file. Therefore, the criteria to enter into this agreement have been met.

[THIS SPACE LEFT BLANK INTENTIONALLY]

EXHIBIT D

Project Budget Worksheet *

*(Provided separately when grant agreement issued to Grantee)

[THIS SPACE LEFT BLANK INTENTIONALLY]

Exhibit E

Data Sharing Provisions for New Mexico Capital Outlay Agreements

I. Introduction:

This Data Sharing Provisions Exhibit ("Exhibit") is incorporated into the New Mexico Capital Outlay Agreements ("Agreements") between the State of New Mexico ("State") and [Insert Partner Name] ("Partner"). This Exhibit outlines the terms and conditions under which data will be shared between the Parties to ensure compliance with New Mexico state laws and regulations, focusing on data privacy, security, and compliance.

II. Definitions:

a. Authorized User: An employee, agent, assign, representative, independent contractor, or other person or entity authorized by Partner or State to access, use, or disclose information through this exhibit.

b. Confidential Information: All data or information shared in confidence, with the expectation that it will not be disclosed in an identifiable form. This includes data that is exempt from public disclosure under the New Mexico Inspection of Public Records Act (§ 14-2-1 et seq. NMSA 1978) or other relevant laws.

c. Data Storage: Electronic media that hold recorded information.

d. Data Transmission: The process of moving information over a network from its source to one or more destinations.

e. Direct Identifier: Records or data containing personal identifiers such as names, addresses, and social security numbers.

f. Disclosure: Permission to access, release, transfer, or otherwise communicate confidential information by any means to any third party, except as authorized by the Party that controls the record.

g. Encryption involves using algorithms to encode data, rendering it unreadable without a specific key. It may be necessary during data transmission and/or storage.

h. Information: Any data, figures, statistics, or other facts provided or learned about someone or something, including Confidential Information, that may be legally transmitted under this Exhibit.

i. Limited Dataset: A data file that omits Direct Identifiers.

j. Protected Personally Identifiable Information: Sensitive personal details such as social security numbers and financial account numbers, with specific exclusions as outlined in the Agreements.

III. Purpose:

The purpose of this exhibit is to promote transparency, facilitate information sharing between the parties, support better policy and decision-making, and enhance public services through collaborative

[THIS SPACE LEFT BLANK INTENTIONALLY]

data analysis from various sources.

IV. Use of Information:

a. Use of Information obtained or created under this exhibit shall be strictly limited to the purposes stated herein and in the agreements. The parties agree not to sell Information to third parties or use it for commercial, solicitation, or political purposes.

b. Each Party shall serve as the custodian of the Information and comply with all conditions for its use, including security measures to prevent unauthorized access.

c. The Parties shall follow all relevant federal and state laws and regulations governing the use of such Information.

V. Safeguarding Information:

a. Confidentiality: Access to Confidential Information shall be limited to the minimum necessary to accomplish the purposes of this Exhibit. Authorized Users must adhere to the confidentiality requirements.

b. Security: Security practices shall comply with the requirements of the New Mexico Department of Information Technology Act and related regulations. The Parties agree to notify each other within three business days of any suspected or actual security breach.

c. Information Storage and Transmission: Data Storage and Transmission shall take place on an encrypted server with appropriate security controls.

VI. Re-Disclosure of Information:

The Parties agree not to disclose Information except as required by law or with prior written approval of the other Party. If there is a public records request, the Party receiving it shall notify the other Party within three business days.

VII. Ownership of Information:

Legal title to Information shall remain with the provider. The Partner grants the State a royalty-free, non-exclusive, non-transferable license to use the Information in furtherance of the purposes outlined in this Exhibit.

City of Santa Fe New Mexico

Finance Department

Project Ledger Request Form

Date of Request: 10/07/2025

Project Title: Non Congregate Pre-Development

Project Type: ☐ CIP ☑ Grant ☐ Internal Tracking

Project ID: COM2624001

Grant ID: S2625

Approved By: ERIKA LUJAN

CT (Finance Use Only)

Department: Community Health and Safety Project Manager: Kristen Woods Ext: 6913

Project Date Range: OCT 2025 to 6/30/2029 ☐ Create Fixed Asset

---

☐ Multi-Funding (complete all funding sources, should equal 100%)

Funding Source: State of New Mexico, Department of Finance & Administration % of Funding: 100

MUNIS ORG: 2400122 MUNIS OBJ: 490210 Awarded Amount: $710,000.00

Funding Source: _____ % of Funding: _____

MUNIS ORG: _____ MUNIS OBJ: _____ Awarded Amount: _____

Expense String Phase:

A project must have at least one phase identified, this can be used as an additional level of tracking, for example, CIP - Design, Construction, etc. For Grants can be used as reimbursable types, such as transportation, salaries.

(You can create more than one phase and you can default MUNIS ORGs and OBJs, optional)

Phase: WIP (Work in Progress) Construction MUNIS ORG: 2400122 MUNIS OBJ: 572970

Grants Only (list all grants if applicable):

Grantor Name: NM DFA CAP 25-J3157 TRANSITIONAL HOUSING GRANT Awarded Amount: $710,000.00

AR Charge Code: 2400122.490210 ☐ Grant funds multiple projects (Complete a form for each project)

Grantor Id: 700007 Federal CFDA (if applicable): N/A

Grantor Name: _____ Awarded Amount: _____

AR Charge Code: _____ ☐ Grant funds multiple projects (Complete a form for each project)

Grantor Id: _____ Federal CFDA (if applicable): _____

(If grants please provide all grant award documents with form) ☑ Attached Grant Documentation

Log # *{Finance use only}*:	
Journal # *{Finance use only}*:	

City of Santa Fe, New Mexico
BUDGET AMENDMENT RESOLUTION (BAR)

DEPARTMENT / DIVISION NAME	DATE
Community Health and Safety/Youth and Family Division	12/3/2025

ITEM DESCRIPTION	ORG	OBJECT	PROJECT	INCREASE	DECREASE
EXPENDITURES				*{enter as positive #}*	*{enter as negative #}*
WIP Construction - Non-Congregate Pre-Development	2400122	572970	COM2624001	702,900.00	
REVENUES				*{enter as negative #}*	*{enter as positive #}*
NMDFA 25-J3157 - S2625	2400122	490210	COM2624001	(702,900)	
				$ -	$ -

JUSTIFICATION: *(use additional page if needed)*
--Attach supporting documentation/memo

Allocate grand funding from NM DFA in the amount of $702,900.00 for WIP Construction to aquire land and facilities and to plan, design, construct, purchase and equip permanent and transitional houring in Santa Fe in Santa Fe County.

{Complete section below if BAR results in a net change to ANY Fund}

Fund(s) Affected	Fund Balance Increase/(Decrease)
TOTAL:	**0**

Carol Swenson — 12/3/2025
Prepared By *{print name}* — Date

Lia Salaverry

Division Director Signature *{optional}* — Date

Department Director Signature — Date

{Use this form for Finance Committee/ City Council agenda items ONLY}

CITY COUNCIL APPROVAL

City Council Approval Date

Agenda Item #:

Andy Hopkins
Budget Officer — Date

Finance Director *{≤ $5,000}* — Date

BRIAN MOYA — Jan 12, 2026

City Manager *{≤ $60,000}* — Date

Signature:

Email: efquintana@santafenm.gov

25 J3157 TRANSITIONAL HOUSING FOR SIGNATURE

Final Audit Report 2026-01-12

Created:	2026-01-05
By:	Cathy Thompson (cmthompson@santafenm.gov)
Status:	Canceled / Declined
Transaction ID:	CBJCHBCAABAAUdRmzFJSTcvXX6pUqf51nBD0Nk0acAAd

"25 J3157 TRANSITIONAL HOUSING FOR SIGNATURE" History

Document created by Cathy Thompson (cmthompson@santafenm.gov)
2026-01-05 - 6:58:24 PM GMT- IP address: 63.232.20.2

Document emailed to ERIKA LUJAN (evlujan@santafenm.gov) for signature
2026-01-05 - 7:02:00 PM GMT

Document e-signed by ERIKA LUJAN (evlujan@santafenm.gov)
Signature Date: 2026-01-12 - 3:32:49 PM GMT - Time Source: server- IP address: 63.232.20.2

Document emailed to BRIAN MOYA (bjmoya@santafenm.gov) for signature
2026-01-12 - 3:32:51 PM GMT

Email viewed by BRIAN MOYA (bjmoya@santafenm.gov)
2026-01-12 - 6:27:34 PM GMT- IP address: 187.157.139.174

Document e-signed by BRIAN MOYA (bjmoya@santafenm.gov)
Signature Date: 2026-01-12 - 6:27:58 PM GMT - Time Source: server- IP address: 187.157.139.174

Document emailed to Erika Quintana (efquintana@santafenm.gov) for signature
2026-01-12 - 6:28:01 PM GMT

Email viewed by Erika Quintana (efquintana@santafenm.gov)
2026-01-12 - 8:11:58 PM GMT- IP address: 63.232.20.2

Document declined by Erika Quintana (efquintana@santafenm.gov)
Decline reason: My initials and signature cannot be placed on this until this is fully approved. EQ
2026-01-12 - 8:28:28 PM GMT- IP address: 63.232.20.2

Powered by Adobe Acrobat Sign

CITY OF SANTA FE

Memorandum

Date: December 3rd, 2025

To: Governing Body, Finance Committee, Quality of Life Committee, and Public Works and Utilities Committee

From: Andréa Salazar, City Clerk

RE: Adoption of Open Meetings Act Notice Standards for 2026

EXECUTIVE SUMMARY:
The proposed Resolution adopts reasonable notice standards for the City's policymaking bodies for 2026, which is required by the New Mexico Open Meetings Act (OMA). The Governing Body's Open Meetings Act Resolution from 2025 will sunset when the Governing Body adopts the 2026 Resolution and the 2026 Resolution will sunset when the Governing Body adopts its 2027 Open Meetings Act resolution.

BACKGROUND:
OMA, NMSA 1978, Sections 10-15-1 to -4, requires that public bodies adopt reasonable notice standards for their public meetings at least annually. As a result, each year the Governing Body adopts a Resolution adopting notice standards for that year.

ATTACHMENTS:
Resolution
Fiscal Impact Report

CITY OF SANTA FE, NEW MEXICO

RESOLUTION NO. 2025-__

INTRODUCED BY:

Councilor Jamie Cassutt

Mayor Alan Webber

A RESOLUTION

ADOPTING ANNUAL OPEN MEETINGS ACT NOTICE STANDARDS FOR 2026.

WHEREAS, the New Mexico Open Meetings Act ("Open Meetings Act") NMSA 1978, §§ 10-15-1 to – 4, requires that public bodies "determine at least annually in a public meeting what notice for a public meeting is reasonable when applied to that body"; and

WHEREAS, the Open Meetings Act applies to the City of Santa Fe's ("City's") Governing Body and the Governing Body's subordinate policymaking bodies; and

WHEREAS, the Governing Body desires to comply with the Open Meetings Act's annual public notice requirement by adopting this resolution, establishing reasonable notice standards for the City's policymaking bodies; and

WHEREAS, the Governing Body seeks to give annual notice to the public of its determination, pursuant to NMSA 1978, Section 10-15-1(D), that it adopts an annual regular meeting calendar for the Governing Body's regular meetings for the entire calendar year and provides at least a seventy-two (72) hour notice of the agenda items scheduled for discussion prior to its regular and special meetings; and

WHEREAS, although many of the City's subordinate policy-making bodies' meetings are noticed weeks or months in advance, seventy-two hours notice is also reasonable for noticing the meetings of subordinate policymaking bodies and for posting agendas listing the matters that will be discussed.

NOW, THEREFORE, BE IT RESOLVED BY THE GOVERNING BODY OF THE CITY OF SANTA FE:

Section 1. The Open Meetings Act applies to the City's policymaking bodies.

Section 2. The notice requirements set forth below are hereby adopted.

A. The City shall give at least seventy-two (72) hours' notice of all regular and special meetings of the Governing Body and its subordinate policymaking bodies.

B. The notice shall include the date, time, place(s) of the planned meeting, and a list of the specific items of business to be discussed or transacted at the meeting or information about how the public may obtain a copy of such an agenda.

C. The City shall make the notice available to the public and news media through reasonable means, including posting on the City's website, and providing the notice to broadcast stations licensed by the federal communications commission and newspapers of general circulation that have provided a written request for such notice.

D. Agendas shall be posted on the City's website.

Section 3. Regular Meetings of the Governing Body

A. Unless otherwise specified, including in subsection B below, regular meetings of the Governing Body shall be held as follows:

i. On the 15th of January and last Wednesday of January.

ii. The second and last Wednesday of each month after January, other

than November and December, when regular meetings will be on the second Wednesday but not the last Wednesday.

iii. In the City Council Chambers of the municipal building of the City, located at 200 Lincoln Avenue, Santa Fe.

B. When it is difficult or impossible for members of the Governing Body to meet in person, they may participate virtually pursuant to SFCC 1987, Section 1-9.

C. To the extent possible, meetings will be broadcast via the City's YouTube channel and other media as available, such as on the radio from KSFR 101.1 FM.

Section 4. Special Meetings

A. The City shall provide a minimum of 72 hours' notice of all special meetings of the Governing Body and its subordinate policymaking bodies.

B. Unless otherwise specified, special meetings are held at the same place as regular meetings. The date, time, and place of a special meeting shall appear on the agenda and be made available to the public and news media through reasonable means including posting on the City's website.

C. The agenda shall be posted on the City's website.

D. When it is difficult or impossible for members of the Governing Body to meet in person, they may participate virtually pursuant to SFCC 1987, Section 1-9.

E. To the extent possible, meetings will be broadcast via the City's YouTube channel and other media as available, such as on the radio station KSFR 101.1 FM.

Section 5. Quasi-Judicial Committees and Subordinate Policymaking Bodies

A. Every quasi-judicial committee, board, or commission, including but not limited to the planning commission, historic design review board, and board of

adjustment, shall follow the same notice requirements as the Governing Body, and as provided in this resolution and the Open Meetings Act.

B. All other policymaking boards, commissions, and committees shall follow the same notice requirements as provided by the Open Meetings Act.

Section 6. Emergency Meetings

A. Pursuant to its procedural rules, the Governing Body or subordinate policymaking body may call, with, if possible, up to 24 hours' notice, a meeting to consider any matter that, if not addressed immediately, will likely result in injury or damage to persons or property or significant financial loss to the City. When possible, the City will provide 24-hour telephonic notice to all media who normally cover City meetings before the emergency meeting commences.

B. The notice for all emergency meetings shall include an agenda for the meeting or information on how the public may obtain a copy of the agenda. Unless there is a State or national emergency already declared for the same reasons, within ten (10) days of taking action on an emergency matter, the City will notify the Attorney General's Office that the emergency meeting took place.

Section 7. Term

This Resolution shall sunset upon adoption of the 2027 Open Meetings Act Resolution, making it unnecessary to rescind.

PASSED, APPROVED, and ADOPTED this _____day of _____, 2025.

_____

ALAN WEBBER, MAYOR

ATTEST:

_____

ANDRÉA SALAZAR, CITY CLERK

APPROVED AS TO FORM:

Erin McSherry

Erin McSherry (Dec 3, 2025 13:53:44 MST)

_____

ERIN K. McSHERRY, CITY ATTORNEY

Legislation/2026/Resolutions/Open Meetings Act 2026

FIR No. 10724.0

FISCAL IMPACT REPORT

General Information:

(Check) **Bill:** _____ **Resolution:** X

Short Title(s): Open Meetings Act 2026

Sponsor(s): Councilor Jamie Cassutt, Mayor Alan Webber

Reviewing Department(s): City Clerk

Staff Completing FIR: Andréa Salazar, City Clerk **Date:** 12/03/2025 **Phone:** (505) 955-6327

Reviewed by City Attorney: Erin McSherry Erin McSherry (Dec 3, 2025 13:53:44 MST) **Date:** _____

Reviewed by Finance Director: Emily K. Oster **Date:** 12/03/2025

Summary:
The purpose of this Resolution is to comply with the Open Meetings Act (OMA) by adopting annual OMA notice standards for 2026. The Resolution shall sunset upon adoption of the 2027 Open Meetings Act resolution.

Departments Affected:
Governing Body, City Clerk's Office, and Departments supporting policy making bodies.

Consequences of Not Enacting Legislation:
If this legislation is not adopted, the Governing Body would fail to comply with the OMA requirement that it adopt annual notice standards for meetings governed by the OMA.

Conflict, Duplication, Companionship, or Relationship to Other Legislation:
The 2025 Resolution sunsets upon adoption of this Resolution and this Resolution will sunset upon the adoption of the 2027 Open Meetings Act resolution.

Performance and Administrative Implications:
Complying with the OMA is required for the decisions of policy making bodies to be final and binding.

Fiscal Implications:
OMA does not require stenographers, but it does require minutes for the Governing Body. Funds for contracting with persons who take minutes come from the General Fund and are included in the City Clerk's budget for FY26.

Fiscal Impact

_____ Check here if no fiscal impact

Expenditures

Expenditure Type	FYE 2026	FYE 2027	FYE 2028	Require BAR (Y/N)	Recurring (R) or Non-recurring (NR)	Fund	3-Year Total Cost
Personnel and Benefits*	$	$	$				
Capital Outlay	$	$	$				
Contractual/ Professional Services	$ 20,000	$20,000	$20,000				
Operating	$	$	$				$
Total:	$	$	$				$60,000

Expenditure Narrative:

The City Clerk's Office allocated $20,000 for stenographer costs associated with providing minutes to the Governing Body.

Revenue

Revenue Type	FYE 2026	FYE 2027	FYE 2028	Recurring (R) or Non-recurring (NR)	Fund
General Fund	$	$	$		
Special Revenue	$	$	$		
CIP	$	$	$		
Enterprise	$	$	$		
Internal Service	$	$	$		
Trust and Agency	$	$	$		
Federal	$	$	$		
Other	$	$	$		
Total	$	$	$		

Revenue Narrative:

Signature:

Email: gfcardenas@santafenm.gov

CITY OF SANTA FE

Memorandum

Date: December 3, 2025

To: Governing Body, Quality of Life Committee, Finance Committee

From: Marci Eannarino, Legislation and Policy Innovation Manager ME
Christine Spiers, Legislative Assistant
Palmer Anderson, Policy Analyst

RE: Updating City Manager Qualifications

SUMMARY:

The proposed legislation would amend SFCC 1987, Section 2-4.2 to update qualifications for the City of Santa Fe's ("City") City Manager position to require candidates for City Manager and Deputy City Manager to meet the following two criteria:

1. have the necessary administrative and managerial skills and experience to manage the City; and
2. be credentialed by the International City/County management Association ("ICMA") or have equivalent education and experience to qualify for a credential.

The updated language would also specify that if not already credentialed, a candidate for City Manager must apply for credentials within one year of being appointed to the City Manager position. Lastly, the bill proposes that if after five months, a credentialed candidate or a candidate qualified to apply for a professional credential is not appointed, the Mayor may consider an individual who meets requirements to be considered as a candidate for a *future* credential such as "Credentialed Manager Candidate Status", as defined by the ICMA.

The bill also specifies that acting and/or interim city managers must have "the necessary administrative and managerial skills and experience to manage the City".

Additionally, the bill removes language from Section 2-4.12(B) prohibiting an acting city manager from hiring or removing employees "engaged in the administration service of the city except on the approval of the governing body".

Finally, the bill leaves language specific to the Deputy City manager role, Section 2-4.6(L), unchanged, stating that the "powers and duties designated to the deputy city manager shall not exceed the powers and duties of the city manager; and the minimum qualifications shall be at least those required for the city manager".

BACKGROUND AND ANALYSIS:

The International City/County Management Association (ICMA) is a professional association of city and county managers nationwide. According to the ICMA website, the organization, "offers membership, professional development programs, research, publications, data and information, technical assistance, and training to local government chief administrative officers, their staff, and other organizations around the globe."

The website also states that in order to be "eligible" for an ICMA credential, an individual must be local government chief administrative officers or assistant chief administrative officer, with minimum number of years of experience in qualifying roles and/or education in qualifying decrees, obtain prescribed training, pass an examination, provide professional references and peer review. Requirements for obtaining the credential include a combination of experience, education, and continuing professional development. Examples provided by the organization with respect to what is required within these three criteria are as follows:

1) Experience with staff management, financial management, policy facilitation and implementation, and service delivery;
2) Education requirements in combination with executive experience would include
    a. Masters in public administration or policy + 7 years;
    b. Other graduate degree +8 years;
    c. Baccalaureate degree + 9 years; or
    d. Less than Bachelor's + 15 years.

In addition to the above, in order to maintain a credential from the ICMA, a person who obtains a credential must participate in continuing professional development.

Lastly, individuals who do not meet the combined experience and education, but who expect to attain it within two years, can apply for "credential manager candidate status", meaning the candidate will be "able to receive the full credential as soon as the individual meets the requirements due to already being approved".

ATTACHMENTS:
Bill
FIR

CITY OF SANTA FE, NEW MEXICO

BILL NO. 2025-23

INTRODUCED BY:

Councilor Jamie Cassutt

Councilor Pilar Faulkner

A BILL

AMENDING SFCC 1987, SECTION 2-4.2, TO REQUIRE CITY MANAGERS TO BE INTERNATIONAL CITY MANAGER ASSOCIATION ("ICMA") -CREDENTIALED OR CREDENTIAL-ELIGIBLE UNLESS AN APPOINTMENT AND CONSENT OF SUCH A CANDIDATE IS NOT POSSIBLE AFTER FIVE MONTHS; REQUIRING CANDIDATES FOR DEPUTY CITY MANAGER TO HAVE THE SAME QUALIFICATIONS PURSUANT TO SECTION 2-4.6(L); REMOVING PORTIONS OF SECTION 2-4.3 THAT CONFLICT WITH CITY CHARTER; AND REMOVING THE PROHIBITION FOR AN ACTING CITY MANAGER TO EMPLOY AND DISCHARGE PERSONNEL.

Section 1. Section 2-4.2 of SFCC 1987 (being Ord. No. 1981-15, § 7, as amended) is amended to read:

2-4.2 – QUALIFICATIONS.

A. The city manager shall [~~be selected and appointed solely on the basis of their training, experience and other qualifications for office as hereinafter prescribed without regard for affiliation, or lack of affiliation with any political party or other organization~~]

underscored material = new [~~bracketed material~~] = delete

(1) have the necessary administrative and managerial skills and experience to manage the city of Santa Fe, and

(2) be credentialed by the International City/County Management Association ("ICMA") ("Credentialed") or have the equivalent education and experience to qualify to apply for the ICMA's credentialing program and agree to apply for credentialing within one year of appointment.

B. A mayor shall preferentially consider Credentialed and Credential-eligible candidates for City Manager.

C. If a mayor has not identified a Credentialed or Credential-eligible candidate to appoint or the governing body has not consented to such appointed candidates after five months from the date a city manager resigns, the position becomes vacant, the city opens an application for city manager or begins any other process used to identify a new city manager, whichever occurs first, the mayor may appoint an individual who is not Credentialed or Credential-eligible who agrees to apply for credentialed manager candidate status within six months of the hire date.

Section 2. Section 2-4.3 of SFCC 1987 (being Ord. No. 1996-18, § 2, as amended) is amended to read:

2-4.3 – APPOINTMENT [~~; DISMISSAL~~].

A. The mayor, within [~~ninety (90) days~~] six months of the beginning date of the vacancy in the office of the city manager, shall submit to the city council, at least seven (7) days before the meeting at which the nomination of the appointee shall be made, the name and qualifications of the mayor's prospective appointee to serve as city manager. The governing body, at its next regular meeting shall [~~accept~~] consent to or reject the appointment [~~nomination~~] by a majority vote of all the members of the governing body.

[~~B. The council may dismiss the city manager by a majority vote of all members of the governing body, at a regularly scheduled meeting~~.

~~C. The mayor may dismiss the city manager by a majority vote of all members of the governing body, at a regularly scheduled meeting~~.]

Section 3. Section 2-4.12 of SFCC 1987 (being Ord. No. 1996-37, § 2, as amended) is amended to read:

2-4.12 – ACTING CITY MANAGER; FILLING OF VACANCY.

A. During any temporary absence or disability of the city manager the city manager shall immediately appoint a city employee having the [~~qualifications prescribed in subsection 2-4.2 (A)(1)~~] necessary administrative and managerial skills and experience to manage the city of Santa Fe and to temporarily perform [~~his or her~~] city manager duties until the city manager returns from [~~his or her~~] the temporary absence or disability.

B. The acting city manager has the same duties and responsibilities as granted to a city manager under the Santa Fe City Code [~~; except, that he or she shall neither employ nor discharge any person engaged in the administration service of the city except on the approval of the governing body~~].

C. During any period when the office of city manager shall be vacant for any cause other than a temporary absence or disability, as defined in paragraph A., herein, the mayor shall appoint a city employee having the [~~qualifications prescribed in subsection 2-4.2 (A)(1),~~] the necessary administrative and managerial skills and experience to manage the city of Santa Fe and to temporarily perform the city manager's duties until a regularly selected city manager is appointed. This appointment shall be subject to the consent of a majority of all members of the city council and shall be made within seventy-two (72) hours, at a legally noticed special city council meeting.

PASSED, APPROVED, and ADOPTED this _____day of _____, 2025.

APPROVED AS TO FORM:

Erin McSherry
Erin McSherry (Dec 5, 2025 11:24:12 MST)

ERIN K. McSHERRY, CITY ATTORNEY

Legislation/2025/Bills/Updating City Manager Qualifications

FIR No. 10717

FISCAL IMPACT REPORT

General Information:

(Check) **Bill:** X **Resolution:** _____

Short Title(s): Updating Qualifications for the City manager

Sponsor(s): Councilor Jamie Cassutt and Councilor Pilar Faulkner

Reviewing Department(s): City Attorney's Office

Staff Completing FIR: Marci Eannarino, Manager of Legislation and Policy

Date: 9/22/2025 **Phone:** 505-637-1907

Reviewed by City Attorney: Erin McSherry **Date:** 12/05/2025

Erin McSherry (Dec 5, 2025 11:24:12 MST)

Reviewed by Finance Director: Emily K. Oster **Date:** 12/05/2025

Summary:

The proposed legislation would amend SFCC 1987, Section 2-4.2, to require candidates for the City of Santa Fe's ("City") City Manager position either be credentialed by the International City/County management Association ("ICMA") or be eligible for the credential, unless no such candidate is identified for six months. A credential-eligible candidate for City Manager must apply for credentials within one year of being appointed to the City Manager position. If, after five months, a credentialed candidate or a candidate qualified to be credentialed is not hired, the Mayor may consider a candidate who agrees to apply for "Credentialed Manager Candidate Status", as defined by the ICMA, within a six months of the hire date.

The bill also addresses criteria for the event of a temporary absence or disability of the city manager or for a vacancy period in the office. In these circumstances the mayor would appoint someone who has "the necessary administrative and managerial skills and experience to manage the City".

Additionally, the bill removes language from Section 2-4.12(B) prohibiting an acting city manager from hiring or removing employees "engaged in the administration service of the city except on the approval of the governing body".

Another section of code requires the Deputy City Manager to have the same qualifications as the City Manager. Therefore, by changing the required qualifications for the City Manager, the Bill would also change the qualifications for the Deputy City Manager.

Departments Affected:

Mayor's Office and City Manager's Office

Consequences of Not Enacting Legislation:

If this legislation is not adopted, then the qualifications for City Manager and Deputy City Manager will not include having or obtaining ICMA credentials.

Conflict, Duplication, Companionship, or Relationship to Other Legislation:
The amendments to Section 2-4.2 would amend by reference the qualifications required for the Deputy City Manager: Section 2-4.6(L) provides that "[t]he powers and duties designated to the deputy city manager shall not exceed the powers and duties of the city manager, and the minimum qualifications shall be at least those required for the city manager."

Performance and Administrative Implications:
The proposed legislation would require future City Manager and Deputy City Manager candidates to 1) possess the necessary administrative and managerial skills and experience to manage the City, and 2) be ICMA credentialed or be ICMA credential-eligible and commit to obtaining ICMA credentials within one year of being appointed. If a candidate with these two requirements is not appointed and consented to within six months, the proposed language allows for the appointment of a candidate who has the "necessary administrative and managerial skills and experience to manage the City" and who would within six months apply for "Credentialed Manager Candidate Status", as defined by the ICMA.

Fiscal Implications:
None.

Fiscal Impact

X Check here if no fiscal impact

Expenditures

Expenditure Type	FYE 2026	FYE 2027	FYE 2028	Require BAR (Y/N)	Recurring (R) or Non-recurring (NR)	Fund	3-Year Total Cost
Personnel and Benefits*	$	$	$				
Capital Outlay	$	$	$				
Contractual/ Professional Services	$	$	$				
Operating	$	$	$				$
Total:	$	$	$				$

Expenditure Narrative:

Revenue

Revenue Type	FYE 2026	FYE 2027	FYE 2028	Recurring (R) or Non-recurring (NR)	Fund
General Fund	$	$	$		
Special Revenue	$	$	$		
CIP	$	$	$		
Enterprise	$	$	$		
Internal Service	$	$	$		
Trust and Agency	$	$	$		
Federal	$	$	$		
Other	$	$	$		
Total	$	$	$		

Revenue Narrative:

Signature: Marci Annarino

Email: maeannarino@santafenm.gov

CITY OF SANTA FE, NEW MEXICO

PROPOSED AMENDMENT(S) TO BILL NO. 2025-23

Updating City Manager Qualifications

Mayor and Members of the City Council:

In relation to Bill No. 2025-23.

This amendment WILL change the caption. _____

This amendment WILL NOT change the caption. __X___

I intend to propose the following amendment(s),

CITY OF SANTA FE, NEW MEXICO

BILL NO. 2025-23

INTRODUCED BY:

Councilor Jamie Cassutt

Councilor Pilar Faulkner

RED- Amendment A – Councilor Feghali

A BILL

AMENDING SFCC 1987, SECTION 2-4.2, TO REQUIRE CITY MANAGERS TO BE INTERNATIONAL CITY MANAGER ASSOCIATION ("ICMA") -CREDENTIALED OR CREDENTIAL-ELIGIBLE UNLESS AN APPOINTMENT AND CONSENT OF SUCH A

underscored material = new [bracketed material] = delete

CANDIDATE IS NOT POSSIBLE AFTER FIVE MONTHS; REQUIRING CANDIDATES FOR DEPUTY CITY MANAGER TO HAVE THE SAME QUALIFICATIONS PURSUANT TO SECTION 2-4.6(L); REMOVING PORTIONS OF SECTION 2-4.3 THAT CONFLICT WITH CITY CHARTER; AND REMOVING THE PROHIBITION FOR AN ACTING CITY MANAGER TO EMPLOY AND DISCHARGE PERSONNEL.

Section 1. Section 2-4.2 of SFCC 1987 (being Ord. No. 1981-15, § 7, as amended) is amended to read:

2-4.2 – QUALIFICATIONS.

A. The city manager shall [~~be selected and appointed solely on the basis of their training, experience and other qualifications for office as hereinafter prescribed without regard for affiliation, or lack of affiliation with any political party or other organization~~]

(1) have the necessary administrative and managerial skills and experience to manage the city of Santa Fe, and

(2) be credentialed by the International City/County Management Association ("ICMA") ("Credentialed") or have the equivalent education and experience to qualify to apply for the ICMA's credentialing program and agree to apply for credentialing within one year of appointment.

B. A mayor shall preferentially consider Credentialed and Credential-eligible candidates for City Manager.

C. If a mayor has not identified a Credentialed or Credential-eligible candidate to appoint or the governing body has not consented to such appointed candidates after five months from the date a city manager resigns, the position becomes vacant, the city opens an application for city manager, or the city begins any other process used to identify a new city manager, whichever occurs first, the mayor may appoint an

individual who is not Credentialed or Credential-eligible who agrees to apply for credentialed manager candidate status within six months of the hire date.

Section 2. Section 2-4.3 of SFCC 1987 (being Ord. No. 1996-18, § 2, as amended) is amended to read:

2-4.3 – APPOINTMENT [~~; DISMISSAL~~].

A. The mayor, within [~~ninety (90) days~~] six months of the beginning date of the vacancy in the office of the city manager, shall submit to the city council, at least seven (7) days before the meeting at which the nomination of the appointee shall be made, the name and qualifications of the mayor's prospective appointee to serve as city manager. The governing body, at its next regular meeting shall [~~accept~~] consent to or reject the appointment [~~nomination~~] by a majority vote of all the members of the governing body.

[~~B. The council may dismiss the city manager by a majority vote of all members of the governing body, at a regularly scheduled meeting~~.

~~C. The mayor may dismiss the city manager by a majority vote of all members of the governing body, at a regularly scheduled meeting~~.]

Section 3. Section 2-4.12 of SFCC 1987 (being Ord. No. 1996-37, § 2, as amended) is amended to read:

2-4.12 – ACTING CITY MANAGER; FILLING OF VACANCY.

A. During any temporary absence or disability of the city manager the city manager shall immediately appoint a city employee having the [~~qualifications prescribed in subsection 2-4.2 (A)(1)~~] necessary administrative and managerial skills and experience to manage the city of Santa Fe and to temporarily perform [~~his or her~~] city manager duties until the city manager returns from [~~his or her~~] the temporary absence or disability.

B. The acting city manager has the same duties and responsibilities as granted to a city manager under the Santa Fe City Code [~~; except, that he or she shall neither employ nor discharge any person engaged in the administration service of the city except on the approval of the governing body~~].

C. During any period when the office of city manager shall be vacant for any cause other than a temporary absence or disability, as defined in paragraph A., herein, the mayor shall appoint a city employee having the [~~qualifications prescribed in subsection 2-4.2 (A)(1),~~] the necessary administrative and managerial skills and experience to manage the city of Santa Fe and to temporarily perform the city manager's duties until a regularly selected city manager is appointed. This appointment shall be subject to the consent of a majority of all members of the city council and shall be made within seventy-two (72) hours, at a legally noticed special city council meeting.

Respectfully submitted,

PATRICIA FEGHALI (Jan 21, 2026 13:53:19 MST)

PATRICIA FEGHALI, COUNCILOR

APPROVED AS TO FORM:

Marcos Martinez

Marcos Martinez (Jan 21, 2026 10:59:52 MST)

MARCOS MARTÍNEZ, INTERIM CITY ATTORNEY

ADOPTED: _____

NOT ADOPTED: _____

DATE: _____

ATTEST:

_____

GERALYN CARDENAS, INTERIM CITY CLERK

CITY OF SANTA FE

Memorandum

Date: January 9th, 2026

To: Governing Body, Finance Committee, Public Works and Utilities Committee

From: Jesse Roach, Interim Public Utilities Director Jesse Roach

RE: Negotiate Purchase of Land Adjacent to Wastewater Treatment Plant

---

EXECUTIVE SUMMARY:

The proposed Resolution would allow the City of Santa Fe City Manager to direct City staff to obtain an appraisal for the 122.634 acres of real property adjacent to the Paseo Real Water Reclamation Facility. The resolution would also allow the City Manager and staff to engage in negotiations with the landowner to acquire the property if such acquisition would be in the best interest of the City. The ultimate decision to purchase the property will be a decision for the Governing Body. The additional land would allow for expanded sludge drying, staging for construction during the Paseo Real Water Reclamation Facility rehabilitation and replacement, and possibly more replacement options for the Paseo Real Water Reclamation Facility.

ATTACHMENTS:

Resolution
Fiscal Impact Report

CITY OF SANTA FE, NEW MEXICO

RESOLUTION NO. 2026-__

INTRODUCED BY:

Councilor Amanda Chavez

Councilor Jamie Cassutt

A RESOLUTION

DIRECTING THE CITY MANAGER TO OBTAIN AN UPDATED APPRAISAL AND NEGOTIATE A SALES PRICE FOR POTENTIAL ACQUISITION OF 122.634 ACRES OF LAND ADJACENT TO THE PASEO REAL WATER RECLAMATION FACILITY.

WHEREAS, since 1961 the City of Santa Fe ("City") has operated the Paseo Real Water Reclamation Facility ("PRWRF") at its current location along the Santa Fe River north of the Municipal Airport, to treat wastewater to a quality sufficient for discharge to the Santa Fe River, to apply to City parks for irrigation, or for resale to other irrigation users; and

WHEREAS, the plant is located on approximately 61.88 acres of land, of which the majority of usable space is being utilized; and

WHEREAS, current operations produce more sludge than the Caja Del Rio Landfill will accept resulting in expensive transport to landfills outside of Santa Fe County; and

WHEREAS, if the City had space to dry the sludge, it could all be disposed of at the Caja Del Rio Landfill; and

WHEREAS, the City's Wastewater Division is currently working to rehabilitate or replace much of the PRWRF; and

WHEREAS, additional space near the PRWRF would allow for expanded sludge drying, staging for construction during PRWRF rehabilitation or replacement, and possibly more replacement options for PRWRF; and

WHEREAS, there is an undeveloped lot of 122.634 acres adjacent to PRWRF to the northwest ("adjacent lot") which may be available for purchase; and

WHEREAS, the appraised value of the adjacent lot in November 2023 was $1,180,000.

NOW, THEREFORE, BE IT RESOLVED, BY THE GOVERNING BODY OF THE CITY OF SANTA FE that the City Manager shall direct staff to obtain an updated appraisal and, if in the best interest of the City, may engage in negotiations with the landowner to acquire the adjacent lot at a price at or below the updated appraised value.

BE IT FURTHER RESOLVED that any final approval of the purchase of the real property will be made at the sole discretion of the Governing Body.

PASSED, APPROVED, and ADOPTED this ___ day of _____ 2026.

_____

MICHAEL GARCIA, MAYOR

ATTEST:

_____

GERALYN CARDENAS, INTERIM CITY CLERK

APPROVED AS TO FORM:

Marcos Martinez

Marcos Martinez (Jan 9, 2026 11:52:47 MST)

MARCOS MARTÍNEZ, INTERIM CITY ATTORNEY

Legislation/2026/Resolutions/Negotiate Purchase Land Adjacent to Wastewater Treatment Plant

FIR No. 10729

FISCAL IMPACT REPORT

General Information:

(Check) **Bill:** _____ **Resolution:** X

Short Title(s): Negotiate Purchase of Land Adjacent to Wastewater Treatment Plant

Sponsor(s): Councilor Amanda Chavez and Councilor Jamie Cassutt

Reviewing Department(s): Public Utilities Department

Staff Completing FIR: Jesse Roach, Interim Public Utilities Director **Date:** 12/12/2025
Phone: (505) 955-4309

Reviewed by City Attorney: Marcos Martinez Marcos Martinez (Jan 9, 2026 11:52:47 MST) **Date:** 01/09/2026

Reviewed by Finance Director: ANDREA PHILLIPS (Jan 9, 2026 11:55:49 MST) **Date:** 01/09/2026

Summary:
The proposed Resolution would allow the City of Santa Fe City Manager to direct City staff to obtain and update an appraisal and engage in negotiations with landowners for the potential acquisition of 122.634 acres of land adjacent to the Paseo Real Water Reclamation Facility. The additional land would allow for expanded sludge drying, staging for construction during the Paseo Real Water Reclamation Facility rehabilitation and replacement, and possibly more replacement options for the Paseo Real Water Reclamation Facility.

Departments Affected:
Public Works Department

Consequences of Not Enacting Legislation:
If this legislation is not adopted, then a updated appraisal will not be obtained and a sales price will not be negotiated for potential acquisition of 122.634 acres of land adjacent to the Paseo Real Water reclamation Facility.

Conflict, Duplication, Companionship, or Relationship to Other Legislation:
Any final approval of the purchase of land will require additional legislation.

Performance and Administrative Implications:
This Resolution would require the City Manager to direct staff to obtain an updated appraisal and engage in negotiations with the landowner on the potential for acquisition of the adjacent lot.

Fiscal Implications:
There will be a minor fiscal impact of approximately $2500 for updating the appraisal of the lot of land adjacent to the Paseo Real Water Reclamation Facility.

Fiscal Impact

_____ Check here if no fiscal impact

Expenditures

Expenditure Type	FYE 2026	FYE 2027	FYE 2028	Require BAR (Y/N)	Recurring (R) or Non-recurring (NR)	Fund	3-Year Total Cost
Personnel and Benefits*	$	$	$				
Capital Outlay	$	$	$				
Contractual/ Professional Services	$ 2500	$	$	N	NR	500	
Operating	$	$	$				$
Total:	$	$	$				$ 2500

Expenditure Narrative:
There would be an expenditure for the appraisal of the lot of land adjacent to the Paseo Real Water Reclamation Facility.

Revenue

Revenue Type	FYE 2026	FYE 2027	FYE 2028	Recurring (R) or Non-recurring (NR)	Fund
General Fund	$	$	$		
Special Revenue	$	$	$		
CIP	$	$	$		
Enterprise	$	$	$		
Internal Service	$	$	$		
Trust and Agency	$	$	$		
Federal	$	$	$		
Other	$	$	$		
Total	$	$	$		

Revenue Narrative:

Signature:

Email: jdroach@santafenm.gov

CITY OF SANTA FE

Memorandum

Date: December 8, 2025

To: Finance Committee

From: Maggie Moore, Assistant Land Use Director MRM

Via: Mark Scott, City Manager
Andrea Phillips, Deputy City Manager
Elisa Montoya, Community Development Director
Heather Lamboy, AICP Planning and Land Use Director

RE: Request for Issuance of a Cease-and-Desist Order to close Korea Spa, 2008 Rosina, Unit B, ZCK, LLC, Zaiqin Wei and Yun Chin, Owners, (505-490-8339). Code Enforcement Case# 2025-005022, Violation of SFCC 18-1.7 *Notice of violation; penalty*, operating in a manner contrary to the public welfare. (Maggie Moore, Assistant Land Use Director, mrmoore@santafenm.gov)

EXECUTIVE SUMMARY:

On October 1, 2025, the Enforcement Division received a report from the Santa Fe Police Department (SFPD) of possible prostitution at Korea Spa, 2008 Rosina, Unit B. According to the report, a male customer was offered sexual acts during his massage, he refused and reported the incident to the SFPD (Police Case #2025010931). Santa Fe City Code Chapter XVI Criminal Code Section 16-7 defines *prostitution* as knowingly engaging in or offering to engage in a *sexual act* for hire and establishes that a *house of prostitution* is a public nuisance per se.

The Enforcement Division is responsible for compliance with SFCC Chapter 18 Licensing, which requires that a person conducting business in the city secure a business license and operate their business in a manner that is not contrary to the public welfare. For certain types of business, the Enforcement Division requires proof of compliance with applicable state regulations, including for food service establishments, cannabis businesses, daycare centers, and massage therapy businesses, among others. Requiring compliance with applicable state laws supports the city's provision that businesses operate in a manner not contrary to the public welfare.

The state has established several requirements for licensing and professional conduct of massage therapists and empowers municipalities to regulate licensed massage therapists pursuant to the

Massage Therapy Practice Act. New Mexico Statutes Annotated (NMSA) 1978 Section 61-12C-5 requires that individuals shall not provide or offer to provide massage therapy services unless they are a licensed massage therapist. The state law further requires that individuals shall not use the title of massage therapist or make any representation of being a massage therapist or use any other title, abbreviations, letters, figures, signs, or devices that indicate the individual is a massage therapist unless the individual is a licensed massage therapist, and licenses issued by the state are not transferable or assignable. Additionally, NMSA 1978 Section 61-12C-11 and Section 16.7.1.9 NMAC requires that massage therapy licenses or registrations issued by the state board be posted at all times in a conspicuous place in the massage therapist's principal place of business.

Based on the referral from SFPD (Police Case #2025010931), members of the City's Enforcement Division ("Staff") inspected 2008 Rosina Street, Unit B (the "Property") on October 10, 2025. Upon approach, the main entrance to the business was locked, but Staff gained access to the property by Yang Zhenghui, who provided a New York State Learner Permit as identification (see Attachment A.1). There were no other individuals present at the time of the inspection, and Ms. Zhenghui who is not a licensed massage therapist, flashed a member of our enforcement team by raising her dress to expose herself.

Through online translation services, Staff informed Ms. Zhenghui of the requirements for a valid business license, that licensed massage therapists must have their licenses posted in a conspicuous place in the business at all times, that primary entrances and exits must remain unlocked when the business is open, and directed her that only licensed massage therapists were allowed to provide massages per NMSA 1978 Section 61-12C-5.

Korea Spa has a city business license #236636, issued on 4/24/2024 and renewed on 4/24/2025 (expires 4/24/2026), affiliated with Zaiqin Wei. Previously, the business was named Excellent Spa and was affiliated with Peijung Chen (Massage Therapy License # MT9418). At the time of the inspection, the license was not posted at the property; only an invoice for a business license was posted.

Following the inspection, the Enforcement Division gathered evidence that the business is advertising for illicit sexual activities online (Attachment A.4), did not employ licensed massage therapists, and is operating in a manner contrary to the public welfare by advertising and offering sexual acts under the guise of massage therapy sessions.

The ZCK, LLC was filed with the NM Secretary of State's Office on August 31, 2022, and was organized by Bradley J Morris an accountant affiliated with the Chinese American Service Center (CASC), LLC. Mr. Morris stated he was aware of at least 3 massage parlors owned or operated by Zaiqin Wei and her husband Yun Chin, two in New Mexico and one in Amarillo, TX (see Table 1).

China Massage/Asian 2 Massage, was located at 3600 Rodeo Lane B2 in Santa Fe, and is not currently operating at that space, but there is a record of illicit online advertising for that business and the affiliated phone number.

A property search for Moon Spa, located at 3314 SW 45th Ave on the Potter Randall Appraisal District website (prad.org) confirmed that Ms Zaiqin Wei is the owner of Moon Spa in Amarillo, TX and lists a mailing address of 8758 Sevano Circle NE, Albuquerque for Ms. Wei, which matches her NM Driver's License. There is also a record of illicit online advertising associated with this business phone numbers (626) 227-6183 and (505)361-7597. Online searches also connect the 626-227-6183 number to another closed massage parlor at 1301 S St Francis Drive, also under the name Asian 2 Massage.

Table 1. Massage Parlors owned or affiliated with Zaiqin Wei

Business Name	Address	City	Phone Number
Korea Spa/Excellent Massage	2008 Rosina Unit B	Santa Fe	505-490-8339
China Massage/Asian 2 Massage	3600 Rodeo Lane B2	Santa Fe	505-424-6458 (closed)
Moon Spa	3314 SW 45th Ave	Amarillo	626-227-6183 / 505-361-7597
Asian 2 Massage (closed)	1301 S St Francis Drive Ste A	Santa Fe	626-227-6183 (closed)

On November 5, 2025, Carl Krings issued a violation notice (see Attachment A), which was posted on the property, sent to the business owner, Zaiqin Wei and the property owner, M3 CO, LLC, G Alan Myers. The notices established a compliance date of November 20th and a Finance Committee hearing date of December 8, 2025.

On November 14, 2025, Carl Krings met with Zaiqin Wei, Qui Li, and Yang Zhang (phone) at City Hall to review additional records. Through a translation application and with additional translation support of Yang Zhang, Carl received the massage therapy licenses of Zaiqin Wei (MT-2025-0220 Issued 10/28/2025) and Qiu Li (MT-2025-0216, issued 10/21/2025). On November 18th during normal business hours, Enforcement Staff conducted a follow-up inspection of the property and found the while the massage and open signs were on, the front door was locked and staff was not granted access onto the property to verify compliance with the law.

Per SFCC 18-1.8 *Enforcement; hearing; cease and desist order*; staff requests that the Finance Committee issue a cease and desist order closing the business, Korea Spa, ZKC, LLC at 2008 Rosina, Unit B, Zaiqin Wei, owner/operator.

BACKGROUND:

Illicit massage businesses (IMBs) commonly known as "massage parlors" have become ubiquitous across the country, within the state of New Mexico, and in our community. Research finds an estimated 9,000-plus of these businesses operate in every state in the country, with earnings totaling nearly $2.5 billion per year.[1] Staff research of business license records and online advertising indicates there are as many as twenty (20) IMBs operating within the city of Santa Fe, some with valid business licenses, expired licenses or without the requisite business license. The

[1] Keyhan, Rochelle et al, "Trafficking in Illicit Massage Businesses." Polaris, (January 17, 2018)

State of New Mexico, through the Massage Therapy Board oversees the practice of individuals who use the title of massage therapist or otherwise represent themselves to be massage therapists, and massage therapy schools. The State and the Board do not regulate businesses that use the title of massage or otherwise represent themselves as massage businesses.

Acts of prostitution have a long history of concealing themselves behind the label of massage. While there may be some individuals who choose to sell sex under the guise of massage therapy, evidence suggests that thousands of women engaging in commercial sex in illicit massage businesses are victims of human trafficking. Corporate secrecy laws that obscure ownership make it nearly impossible to identify the organized crime networks and traffickers behind these operations[2]. Traditional law enforcement approaches are resource intensive and often focus on the women engaged in these illicit acts, further victimizing them, while the criminal networks and traffickers evade accountability. Furthermore, the ubiquity of IMBs degrades the integrity of legitimate massage therapists, spas and wellness businesses.

Many jurisdictions have found success in closing IMBs through targeted business licensing requirements[3], particularly in those jurisdictions which require all businesses to obtain a license, as Santa Fe does. Successful ordinances target the easily observable characteristics that distinguish an illicit massage business from a legitimate massage therapy business. Trevor Vaughn, an expert in identifying and preventing IMBs, has observed several factors in the business models of legitimate massage therapy businesses and illicit sex and human trafficking businesses (see Table 2).

Table 2. Illicit and Legitimate Massage Business Models

Illicit Sex and Human Trafficking Business	**Legitimate Massage Therapy Business**
Cheat requirements to look legit	Professional training, education and license
Advertise to people looking for sex	Advertise for health purposes
Unlicensed personnel	Licensed Massage Therapists
No records of treatments or clients	Regular business recordkeeping
Long hours, often living on site	Normal business hours and operations
Locked doors to conceal illicit activities	Professional massage practices
Advertise at lower rates	Rates match industry standard

The Department is currently engaged with the City Attorney's Office to draft a new massage facility ordinance to prevent IMBs from opening via a thorough application process, and regulating those characteristics and behaviors associated with IMBs. In Aurora, Colorado, multiple IMBs predated the passage of its ordinance in May 2018. By allowing the city to close businesses for

[2] "Hidden in Plain Sight: How Corporate Secrecy Facilitates Human Trafficking in Illicit Massage Parlors." Polaris (April 1, 2018)

[3] "Successful Massage Ordinance Factors." The Network, (September, 2021)

committing certain violations, such as operating without a license, Aurora closed 18 IMBs within a year after its regulations went into effect.

The Department intends to bring forward the legislation for adoption by the end of the calendar year and will continue targeted inspections and enforcement actions against illicit massage businesses operating within the city.

ATTACHMENTS:

A. Notice of Violation Case #2025-005022
1. Yang Zhenghui New York State Learner's Permit #686-196-768
2. Korea Spa Santa Fe Business License #236636 (Expires April 24, 2026)
3. Zaiqin Wei New Mexico Driver's License #519013231
4. Illicit Online Advertisements – 2008 Rosina Unit B, 505-490-8339

CODE CASE DETAILED REPORT CODE-005022-2025
FOR CITY OF SANTA FE

Case Type: Code Enforcement
Status: In Progress
Assigned To: Carl Krings
Project:
District: Council District 1
Description:
Opened Date: 11/03/2025
Closed Date: NOT CLOSED

Parcel: 12642432 Main
Address: 2008 Rosina St, Unit B Main
Santa Fe, NM 87505
Zone: C2 (ZN: C2)

Owner
M3 Co Llc
G Alan Myers
2501 W Zia Rd #9314
Santa Fe, NM 87502

Violator
Korea Spa
Korea Spa
2008 Rosina St Unit B, UNIT B
Santa Fe, NM 87505
Business: 5054908339

Owner
Zaiqin Wei
8758 Sevano Cir NE
Albuquerque, NM 87113
Mobile: 5855032723

Activity Type	Activity Number	Activity Name	User	Created On
Notice of Violation Sent	COURT-002958-2025		Carl Krings	11/03/2025

Violation Code: Other Zoning
Violation Status: In Violation
Citation Issue Date: 11/03/2025
Compliance Date: 11/20/2025
Code Description: Chapter 14 - other zoning violations
Resolved Date:

Corrective Action: In violation of City of Santa Fe (SFCC)18-1.7(A) If a person required to secure a business license & pay a business license fee is in violation of this section or any provision of the SFCC 1987 or is operating in a manner contrary to public welfare, the City of Santa Fe shall send the person(s) a notice of violation specifically stating the nature of the violation. Upon inspection of the property, no licensed massage therapists were on the premises; nor was a massage therapist's license issued by the N.M. Massage Therapy Board posted in a conspicuous place on the premises, as required by NMSA 1978 Section 61-12C-11 and Section 16.7.1.9 NMAC, All unlicensed massage therapists on the premises must be licensed.
If the provisions of this section or other provisions of SFCC 1987 are not complied with or that the operation contrary to the public welfare is not discontinued within 15 days after the receipt of the notice the person(s) shall appear before the City of Santa Fe Finance Committee on December 8th 2025 at 5:00 pm in the City of Santa Fe Counsel Chambers; 200 Lincoln Avenue Santa Fe, to show cause, why the business should not be closed.

NEW YORK STATE USA

NOT FOR FEDERAL PURPOSES

LEARNER PERMIT

Class D

[redacted]

YANG
ZHENGHUI

[redacted]

[redacted]

Issued 07/08/2022

Expires 12/14/2026

E NONE

R NONE

Sex F Height 5'-02" Eyes BRO

DEC 78

ZHENGHUI YANG

City of Santa Fe

Treasury Department
200 Lincoln Ave.
Santa Fe, New Mexico 87504-0909
505-955-6551

BUSINESS REGISTRATION

Business Name: KOREA SPA
DBA: KOREA SPA

Business Location: 2008 ROSINA ST UNIT B
Santa Fe, NM 87505

Owner: KOREA SPA

License Number: 236636

Issued Date: April 24, 2025

Expiration Date: April 24, 2026

CRS Number: 03649034002

License Type: Business License - Renewable

Classification: Business Registration - Standard

Fees Paid: $35.00

KOREA SPA

THIS IS NOT A CONSTRUCTION PERMIT OR SIGN PERMIT. APPROPRIATE PERMITS MUST BE OBTAINED FROM THE CITY OF SANTA FE BUILDING PERMIT DIVISION PRIOR TO COMMENCEMENT OF ANY CONSTRUCTION OR THE INSTALLATION OF ANY EXTERIOR SIGN.

THIS REGISTRATION/LICENSE IS NOT TRANSFERRABLE TO OTHER BUSINESSES OR PREMISES.

TO BE POSTED IN A CONSPICUOUS PLACE

(505) 490-8339 beautiful girl 100% new & sweet

Updated: Apr/03/2024 10:20AM | View:1509

Excellent Spa

Heal your mind and soothe your body

(505) 490-8339

2008 Rosina St: Unit BSanta Fe, NM 87505

New beautiful asian girl

This is a professional Chinese massage therapy center

We know how to make your body more comfortable and relaxed

If you feel soreness in your waist and legs or any other physical discomfort, please come here

Our skilled massage techniques and gentle and considerate service attitude

This will make your tired body and mind feel more relaxed than ever before

We have received countless accolades and we are the most popular Chinese massage therapy center

We will present you with the most authentic and unique massage experience

All are welcome to visit

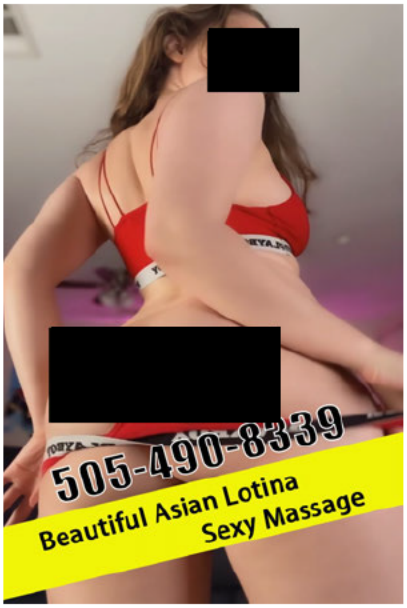





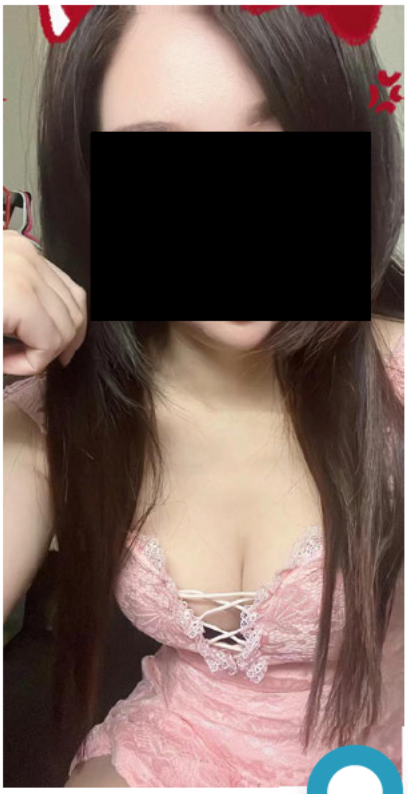

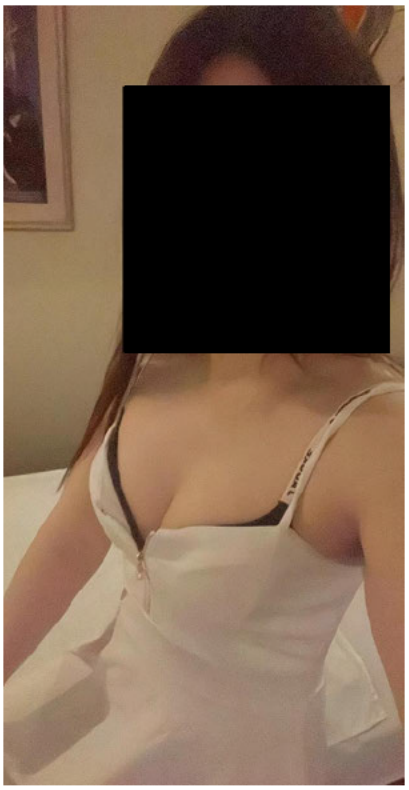

Navigation (505) 490-8339

Home | My Account | Contact | Privacy | Terms

Bodyrubsmap.com is an interactive computer service that enables access by multiple users and should not be treated as the publisher or speaker of any information provided by another information content provider. © 2018. All Rights Reserved. Bodyrubsmap.com

Looking for: All Models

Women Couples Men Trans
Add to Favorites Add to Blacklist

Live Escorts Cam Girls Local Sex

Live Escorts Cam Girls Local Sex

Sugar Babies - Meet girls you thought were out of your league.

About

Find out one beautiful female girl.
I am at the amazing city and huge sex
Only sex, huge girls there can make you satisfied.
Only sex, huge girls there can make you satisfied.
I am looking for some excitement to get your sex here
Only sex, huge girls there can make you satisfied.
This is the best place in the area to satisfy any fantasies you have.
Come to me, I will definitely prepare the top beauties there for you.
Only sex, huge girls there can make you satisfied.
Only sex, huge girls there can make you satisfied.
Only sex, huge girls there can make you satisfied

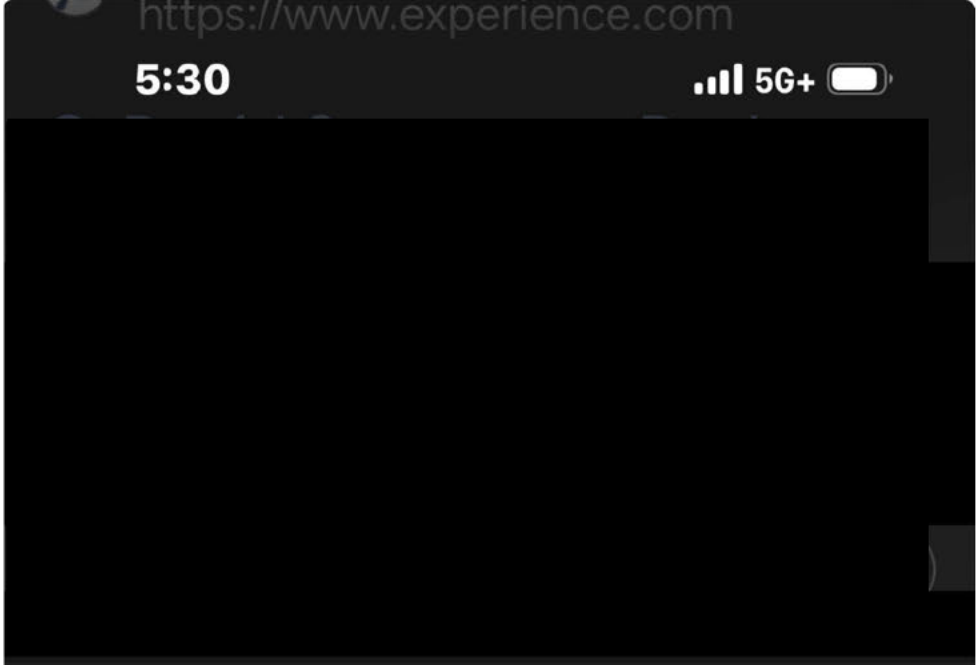

SecretHostess Escorts
https://secrethostess.com

5053617597 Moon Spa Beautiful asian girl: Escort - 26

5053617597 Moon Spa Beautiful asian girl: Escort - Big Boobs, Nude Massage - 26. Age: 26. City: Amarillo TX. Phone Number:...

Bedpage
https://us-amarillo.bedpage.com

super sexy ❤️❤️ new hot baby ❤️❤️ 505-361-7597 ...

505-361-7597; 3314 SW 45th Ave Amarillo TX 79109; Open 7 Days 9:00am-22:00pm. Hi, New Sweet Girl Just Arrived Here! ? ?...

MapQuest

5:12

eccie.net

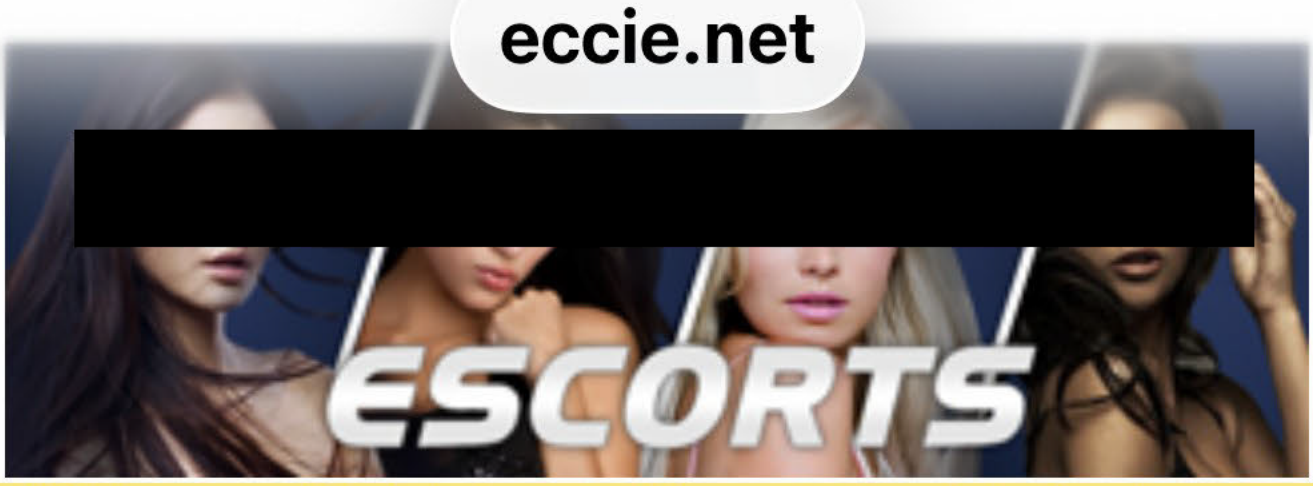

Welcome to ECCIE, become a part of the fastest growing adult community. **Take a minute & sign up!**

ECCIE

NEW MEXICO LADIES | ALBUQUERQUE SHEMALES | HOT SEARCH | User Name | Password | Remember? | I agree to ToS | Log in

REGISTER | REPORT TRAFFICKING | IMAGE SCRAPBOOK | BROWSE BIO PAGES | AVAILABLE NOW | SEARCH LADIES | PAY FOR PREMIUM ACCESS | DISCOUNTED BANNER SUBSCRIPTIONS

Welcome to ECCIE - *Sign up today!*

Become a part of one of the fastest growing adult communities online. We have something for you, whether you're a male member seeking out new friends or a new lady on the scene looking to take advantage of our many opportunities to network, make new friends, or connect with people. Join today & take part in lively discussions, take advantage of all the great features that attract hundreds of new daily members!

SIGN UP | GO PREMIUM

ECCIE Worldwide > Other US Hotspots > New Mexico > Encounters - AMP/Spa - New Mexico
Encounter: Excellent Massage SF

test

Encounters - AMP/Spa - New Mexico Have you experienced an intimate encounter you wish to share with the rest of the community? This is where it's done. The review "template" includes fields for the more basic information regarding your encounter and you can elaborate the details of your encounter more thoroughly in "The Rest of the Story" field which is a private section only visible to Premium Access members of this board. Premium access is granted at staff discretion for review submissions, and 6 weeks credit is given per review. Details can be found by clicking the Premium Access tab at the top of every page

Main Menu

>>REGISTER NOW!<<
Forums
Forum Guidelines
Mobile Version of ECCIE Worldwide - M.ECCIE.NET
Premium Access Advertising
Terms of Use
Contact Us
VIP Girlfriend
OpenAdultDirectory

Most Favorited Images

[redacted]

Recently Uploaded Images

Lolita22
Crunkbusta
Cocobillyboy1
Jenny73134
SummerSensations
staceyrenee
NIQ
ChyenneMonroe
taylorleigh308
NOLAFG722
Jazee
Your_Jonny
Action77
BaronsBlades04
mzlexxi
Cheng85809303
Tiffany_diamondz
Seline
Hipsntits
The0nlyLust
KatiforYou
DallasRain
Emmie
CetoAquafina
Babycarolyndoll

HOT

Reply

Thread Tools

01-15-2025, 06:44 PM #1

lmatoyota69
Premium Access



Join Date: Feb 20, 2024
Location: Santa fe
Posts: 59
Encounters: 16

Encounter: Excellent Massage SF

User ID: N/A
Date: 1/15/2025
Name: Mimi
Phone: (505) 490-8339
Email Address: N/A
URL (Profile or Bio Page): N/A
City: Santa Fe
State: New Mexico
Address: 2008 Rosina St Unit B, Santa Fe, NM 87505
Appointment Type: Spa
Activities: Mish, standing, FBM
Duration of Encounter: 30 minutes
Hair Length and Color: Shoulder length? Black
Age: 30's
Smoking Status: I Couldn't Tell
Ethnic Background: Asian
Physical Description: 5Ft ish. Possibly a tiny bit taller.
A cups, nice firm figure. Cute behind
Recommendation: Yes

Like | 8 users liked this post

QUOTE

Reply

« Previous Thread | Next Thread »

AMPReviews.net



Find Ladies

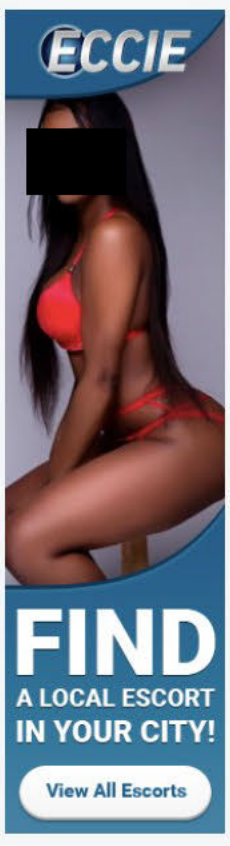

Hot Women

Dallas Escorts
Las Vegas Escorts
Atlanta Escorts
Houston Escorts
Miami Escorts
Phoenix Escorts
Brooklyn Escorts
Tampa Escorts
Detroit Escorts
Chicago Escorts
L.A Escorts